SHERWOOD INDUSTRIES IS AN ENVIRONMENTALLY RESPONSIBLE COMPANY. THIS MANUAL IS PRINTED ON RECYCLED PAPER.

PLEASE KEEP THESE INSTRUCTIONS FOR FUTURE REFERENCE

Enviro

PELLET STOVE

MERIDIAN

OWNER'S MANUAL



PLEASE READ THIS ENTIRE MANUAL BEFORE INSTALLATION AND USE OF THIS PELLET BURNING ROOM HEATER. FAILURE TO FOLLOW THESE INSTRUCTIONS COULD RESULT IN PROPERTY DAMAGE, BODILY INJURY OR EVEN DEATH

Warnock Hersey

C US

Contact your building or fire officials about restrictions and installation inspection requirements in your area.

Table of Contents

Introduction....3
- Pellet Quality....3
- Rating Label Location....4
- Important Safety Data....4
- Safety Warnings and Recommendations....4

Operating Instructions....6
- Stove Controls....6
- Automatic Safety Features....6
- Thermostat....7
- Slider/Damper Setting....8
- Operating Your Pellet Stove....9
- Turning Your Pellet Stove Off....9
- Routine Cleaning and Maintenance....10

Installation....12
- Deciding Where to Locate Your Pellet Appliance....12
- Dimensions....13
- Clearances to Combustibles....13
- Vent Termination Requirement....14
- Outside Fresh Air Connection....15
- Mobile Home Installation....15
- Through Wall Installation....16
- Straight Through Wall Installations....17
- Through Wall With Vertical Rise Installations....17
- Vertical Installation....18
- Hearth Mount Installation....19
- Exterior Mounted Exhaust Blower....20
- Through Wall Vertical Installation....22

Troubleshooting....23
Wiring Diagram....26
Parts List....27
Parts Diagram - Steel....28
Parts Diagram - Components....29
Warranty....30
Installation Data Sheet....31

Introduction

Pellet Quality:

PELLET QUALITY IS IMPORTANT, PLEASE READ

YOUR ENVIRO PELLET STOVE HAS BEEN DESIGNED TO BURN WOOD PELLETS ONLY. DO NOT USE ANY OTHER TYPE OF FUEL, AS THIS WILL VOID ANY WARRANTIES STATED IN THIS MANUAL.

CAUTION: It is important to select and use only pellets that are dry and free of dirt or any impurities such as high salt content. Dirty fuel will adversely affect the operation and performance of the unit and will void the warranty. The Pellet Fuel Industries (P.F.I.) has established standards for wood pellet manufactures. We recommend the use of pellets that meet or exceed these standards. Ask your dealer for a recommended pellet type.

THE PERFORMANCE OF YOUR PELLET STOVE IS GREATLY AFFECTED BY THE TYPE AND QUALITY OF WOOD PELLETS BEING BURNED. AS THE HEAT OUTPUT OF VARIOUS QUALITY WOOD PELLETS DIFFERS, SO WILL THE PERFORMANCE AND HEAT OUTPUT OF THE PELLET STOVE.

Since Sherwood Industries Ltd. has no control over the quality of pellets that you use, we assume no liability for your choice in wood pellets.

P.F.I. PELLET STANDARDS:

Fines (fine particles).....1% maximum through a 1/8" screen
Bulk Density.....40 lbs. per cubic foot minimum
Size.....1/4" to 5/16" diameter 1/2 – 1-1/2" long maximum
Ash Content.....1% maximum (Premium grade)
.....3% maximum (Standard grade)
Moisture Content.....8% maximum
Heat Content.....approximately 8200 BTU per lb. minimum

ASH: The ash content of the fuel and operation of your stove will directly determine the frequency of cleaning. The use of high ash fuels may result in the stove needing to be cleaned daily. A low ash fuel may allow longer intervals between cleaning.

CLINKERING: [clinkers are silica (sand) or other impurities in the fuel that will form a hard mass during the burning process]. This hard mass will block the air flow through the Burn Pot Liner and affect the performance of the stove. Any fuel, even approved types may tend to clinker. Check the Burn-Pot Liner daily to ensure that the holes are not blocked with clinkers. If they become blocked, remove the liner (when the unit is cold) and clean/scrape the clinkers out. Clean the holes with a small pointed object if required. Refer to the section **Routine Cleaning and Maintenance**.

PELLET FEED RATES: Due to different fuel densities and sizes, pellet feed rates may vary. This may require an adjustment to the slider damper setting or to the auger feed trim setting on Low.

Store pellets at least 36" (1 m) away from the pellet stove.

Introduction

Rating Label Location:

The rating label is located on the inside of the hopper lid.

Important Safety Data:

TO PREVENT THE POSSIBILITY OF A FIRE, THIS APPLIANCE MUST BE PROPERLY INSTALLED BY FOLLOWING THE INSTALLATION INSTRUCTIONS. PLEASE READ THIS ENTIRE OWNER'S MANUAL BEFORE INSTALLING OR OPERATING YOUR ENVIRO PELLET STOVE. FAILURE TO FOLLOW THESE INSTRUCTIONS MAY RESULT IN PROPERTY DAMAGE, BODILY INJURY OR EVEN DEATH. CONTACT YOUR LOCAL BUILDING OR FIRE OFFICIALS TO OBTAIN A PERMIT AND ANY INFORMATION ON ANY INSTALLATION RESTRICTIONS AND INSPECTION REQUIREMENTS FOR YOUR AREA. An ENVIRO dealer will be happy to assist you.

THE STOVE'S EXHAUST SYSTEM WORKS WITH NEGATIVE COMBUSTION CHAMBER PRESSURE AND A SLIGHTLY POSITIVE CHIMNEY PRESSURE.

IT IS VERY IMPORTANT TO ENSURE THAT THE EXHAUST SYSTEM BE SEALED AND IS AIRTIGHT.

Safety Warnings And Recommendations:

Fuel: This pellet stove is designed and approved to only burn wood pellet fuel with up to 3% ash content. Dirty fuel will adversely affect the operation and performance of the unit and may void the warranty. Check with your dealer for fuel recommendations.

THE USE OF CORDWOOD IS PROHIBITED BY LAW.

Soot: Operation of the stove with insufficient combustion air will result in the formation of soot which will collect on the glass, the heat exchanger, the exhaust vent system and may stain the outside of the house. This is a dangerous situation and is inefficient. Frequently check your stove and adjust the slider/damper as needed to ensure proper combustion. **See: "Operation - Slider/Damper"**

Cleaning: There will be some build up of fly ash and small amounts of creosote in the exhaust. This will vary due to the ash content of the fuel used and the operation of the stove. It is advisable to inspect and clean the exhaust vent annually or every two tons of pellets.

Ashes: Disposed ashes should be placed in a metal container with a tight fitting lid. The closed container of ashes should be on a non-combustible floor on the ground, well away from all combustible materials pending final disposal. If the ashes are disposed of by burial in soil or otherwise locally dispensed, they should be retained in the closed container until all cinders have been thoroughly cooled.

Electrical: THE USE OF A SURGE PROTECTED POWER BAR IS RECOMMENDED.
The maximum power requirement is 550 watts (4.6 amp). The stove has a grounded electrical cord and should be connected to a standard 115 volt, 60-Hz grounded electrical outlet. Make sure the electrical cord is not trapped under the appliance and that it is clear of any hot surfaces or sharp edges. When installing the stove in a mobile home, it must be electrically grounded to the steel chassis of the home and bolted to the floor in accordance with applicable local, state or federal codes.

Introduction

Glass: Do not abuse the glass by striking or slamming the door. Do not attempt to operate the stove with broken glass. The stove uses ceramic glass. Replacement glass must be purchased from an ENVIRO dealer. Do not attempt to open the door and clean the glass while the unit is in operation or if glass is hot.

Flammable Liquids: Never use gasoline, gasoline-type lantern fuel, kerosene, charcoal lighter fluid, or similar liquids to start or "freshen up" a fire in the heater. Keep all such liquids well away from the heater while it is in use.

Smoke Detector: Smoke detectors should be installed and maintained in the structure when installing and operating a pellet burning appliance.

Operation: The ash pan and door must be closed securely for proper and safe operation of the pellet stove. Also ensure all gaskets on the door are checked and replaced when necessary.

KEEP ASH PAN FREE OF RAW FUEL.

DO NOT PLACE UNBURNED OR NEW PELLET FUEL IN ASH PAN. A fire in the ash pan may occur.

Installation: Be sure to maintain the structural integrity of your home when passing a vent through walls, ceilings, or roofs.

DO NOT INSTALL A FLUE DAMPER IN THE EXHAUST VENTING SYSTEM OF THIS UNIT.

DO NOT CONNECT THIS UNIT TO A CHIMNEY FLUE SERVING ANOTHER APPLIANCE.

Fresh air: Must be connected to all units installed in Mobile Homes as well as "Air Tight Homes" (R2000). Fresh air intake is recommended on all installations. Failure to install intake air may result in poor performance, smoke, property damage, house fire, bodily injury or death under certain conditions.

If you have any questions with regards to your stove or the above-mentioned information, please feel free to contact your local dealer for further clarification and comments.

SINCE SHERWOOD INDUSTRIES LTD. HAS NO CONTROL OVER THE INSTALLATION OF YOUR STOVE, SHERWOOD INDUSTRIES LTD. GRANTS NO WARRANTY IMPLIED OR STATED FOR THE INSTALLATION OR MAINTENANCE OF YOUR STOVE. THEREFORE, SHERWOOD INDUSTRIES LTD. ASSUMES NO RESPONSIBILITY FOR ANY CONSEQUENTIAL DAMAGE(S).

SAVE THIS INSTRUCTION MANUAL FOR FUTURE REFERENCE

Operating Instructions

Stove Controls:

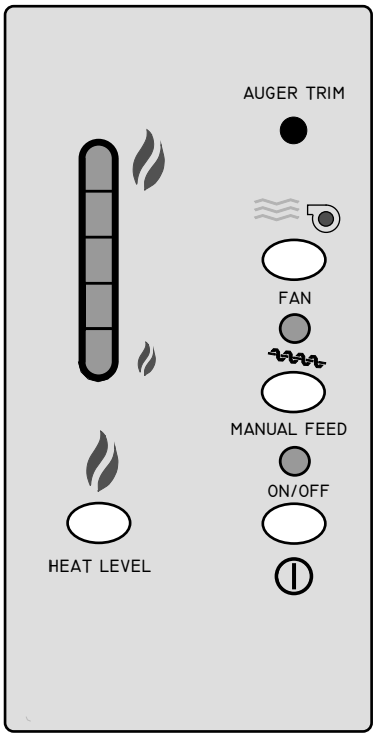

HEAT LEVEL INDICATOR: Shows the Heat Level output setting.

HEAT LEVEL ADJUSTMENT: This button will change the Heat Level output setting of the stove from low to high

ON/OFF BUTTON: Is used to turn the unit ON and OFF

SYSTEM LIGHT: The System Light is responsible for signaling the state of the control board. When the light is flashing during start-up, the stove is in an automatic start mode. When the light is solid, the Heat Level Setting can be altered.

MANUAL AUGER FEED: If the unit runs out of fuel this button can be used to "prime the auger system". This button will turn off after 60 seconds and then must be released, then pressed again.

AUGER LIGHT: This light will flash when the auger motor is energized.

CONVECTION BLOWER CONTROL: Used to turn the convection blower ON/OFF. If the Blower is left off, and the sensor located on the air jacket reaches 160° deg F (71° C), the Convection blower will automatically come on HI speed to cool the unit. Leave the convection blower ON for peak efficiency.

AUGER TRIM: The Auger Trim Button is used to increase or decrease the feed rate on LOW, ONLY. Push the Auger Trim button until the number 1 and 5 lights appear on the Heat Level Indicator. This will increase the feed rate to 4 seconds ON time Auger pulse. This is done only on LOW to allow the burning of poor quality fuels. Push the button until the number 1 and 4 lights appear, this will reduce the Auger On time to 2 second. This setting is for high grade fuel only. Push the button until just the number 1 light is on, this is for a 3 second on time (standard setting).



3 SECONDS "ON"
Standard Setting

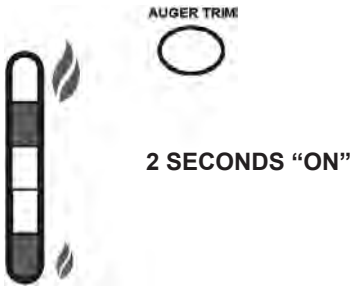

2 SECONDS "ON"

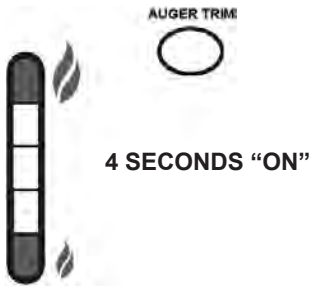

4 SECONDS "ON"

Automatic Safety Features:

Your pellet Stove has the following safety features:

A) The stove will shut off when the fire goes out and the exhaust temperature drops below 120°F (49°C).

B) The stove has a high temperature safety switch. If the temperature on the hopper reaches 200°F (93°C) the auger will automatically stop, and the stove will shut off when the exhaust temperature cools. If this happens call your local dealer to reset the 200°F (93°C) high limit switch. FIND THE REASONS WHY THE UNIT OVERHEATED.

C) This unit has a convection fan control over-ride. This function causes the convection fan to reach its full speed when the temperature at the back of the firebox reaches 160° F (71° C). This is a normal safety feature of your unit.

D) The unit is equiped with a vacuum switch to monitor the venting; if it becomes blocked the vacuum switch will turn off the auger and the #2 light on thec control board will flash.

Thermostat:

This stove can be placed into two different thermostat modes:

HI / LOW OPERATION: If the unit has been placed in the HI / LOW mode. The unit will operate on the low setting when the thermostat is not calling for heat. When the thermostat calls for heat, the unit will go to your selected setting which is displayed on the control board Heat Output Indicator.

ON / OFF OPERATION: If the unit has been placed in the ON /OFF thermostat mode, when the thermostat calls for heat, the unit will go through an ignition sequence and light the stove. Once lit the unit will operate at the selected setting displayed on the control board Heat Output Indicator. Once the thermostat stops calling for heat, the unit will stop feeding pellets and begin its' shut down sequence until cold then turn off.

1. Install the Low Voltage Thermostat (max 24V) in a location that will effectively monitor the desired area to be heated.

2. Open the right cab side to expose thermostat wires and disconnect. Install 18 gauge (see wiring diagram) or heavier wire through the grommet in the back, from the stove to the thermostat. Connect thermostat wires to red wires provided.

3. To set the thermostat jumper to the desired mode, remove the two screws holding the circuit board control panel in place. Lower the board and pull out to change jumper.

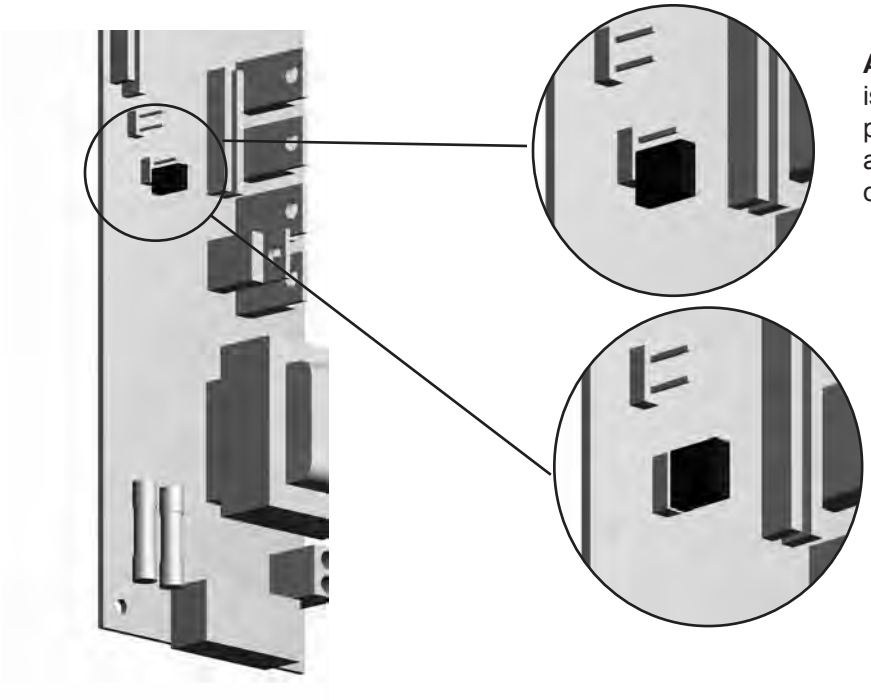

A) HI / LOW: when the jumper is placed on only one of the J9 pins, then the control board is in a HI / LOW mode of thermostat operation(factory setting).

B) ON / OFF: If both pins of J9 are jumped (covered) then the control board is in an ON / OFF mode of thermostat operation.

Operating Instructions

Slider/Damper Setting:

THE SLIDER / DAMPER MUST BE SET AT TIME OF INSTALLATION.

A Qualified Service Technician or Installer must set the Slider Damper.

The slider damper should be set only on a hot stove (operating for 30 minutes or more) by placing a Magnahelic Pressure Gauge in the firebox (test port is located in the center of the stove just below the door opening). Set the slider damper so that the pressure reads

0.11" w.c. (.028 Kpa) on HIGH HEAT LEVEL and when turned down to
LOW HEAT LEVEL, a **0.07" to 0.11"w.c**. **(0.018 to 0.028 Kpa)** reading should be achieved

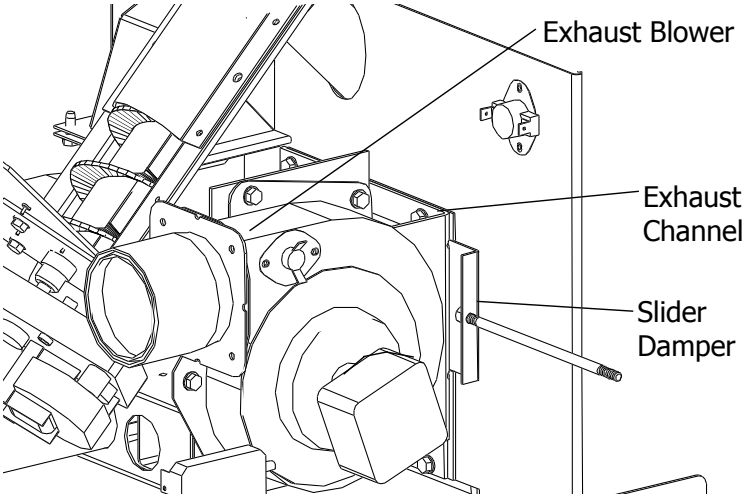

Note: Some parts have been removed in order to see components more clearly.

The pressure readings are taken through a hole in the front of the firebox under the door, using a Magnehelic Gauge.

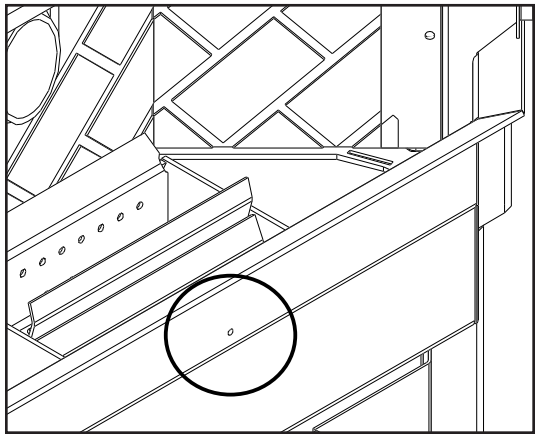

The slider damper is located behind the left cab side. Loosen the two T-20 torx screws , swing open left panel to access.

- If the fire goes out and the heat output has been set on the lowest setting, use the auger trim button to increase feed rate or the Slider Damper should be pushed in slightly, decreasing the air in the firebox. Check the firebox vacuum and re-set if necessary.

- If after long periods of burning the fire builds up and over flows the burn pot or there is a build up of clinkers This would be a sign that the pellet quality is poor and the slider damper must be pulled to compensate, to give the fire more air.

The easiest way to make sure that an efficient flame is achieved is to see the characteristics of the fire.
- A tall and lazy flame with dark orange tips requires more air – Open slider.
- A short and brisk flame, like a blowtorch, has too much air – Close slider.
- If the flame is in the middle of these two characteristics with a bright yellow/orange, active flame then the air may be correct for proper operation - monitor for build up.

SPECIAL NOTES:

Pellet quality is a major factor in how the pellet stove will operate. If the pellets have a high moisture content or ash content the fire will be less efficient and has a higher possibility of the fire building up and creating clinkers (hard ash build-up). If this happens, pull the Slider Damper out slighty to increase the air flow to the fire.

Operating Instructions

Operating Your Pellet Stove:

PRE-BURN INSTRUCTIONS: The burn pot liner holes must be clear and the liner installed properly against the ignitor tube for proper operation. Check the hopper for enough pellets to start the unit.

DO NOT OPERATE THE UNIT WITH THE DOOR OR ASH PAN AJAR

MANUAL MODE:

To START:
Press the ON / OFF Button. The stove will turn on. The System Light will flash. The Auger Light will flash with each pulse of the auger (the Auger Feed Rate is pre-programmed during start-up). The Heat Level Indicator will show the Heat Level that the stove will run at after start-up.

If this is the first time the unit has been started or the unit has run out of fuel, the auger will need to be primed. Press the Manual Auger Feed button until fuel starts to drop into the Burn Pot Liner.

To OPERATE:
When a fire has been established, the System Light will turn solid, the Auger Light will continue to flash to the corresponding Heat Level setting. The Heat Level button can now be pressed to change the desired Heat Level Output setting.

The convection blower (room air blower) will turn on. The speed of this blower is controlled by the setting of the heat level output indicator. The convection blower can be turned OFF by depressing the convection blower control button. When the air jacket reaches 160° F (71° C) the convection blower will come ON High, cooling the unit. For the best efficiency and to prevent cycling, the convection blower should be left on at all times.

When operating on LOW HEAT LEVEL, the feed rate can be adjusted for different quality fuels. These settings can be used if the fire keeps going out on low (poor quality fuel). Or if the low setting is too hot for the room. (see STOVE CONTROLS).

THERMOSTAT / SWITCH MODE:

INTIAL START-UP: See above

OPERATION - HI / LOW mode: When the thermostat contacts are closed the stove settings are adjustable as per Manual Mode (see above). When the thermostat contacts open, the circuit board will take control of the settings. The stove will drop down to a low burn until the thermostat contacts close again. This low burn setting can be adjusted for different fuel qualities (see STOVE CONTROLS). The stove will come back to the previous HEAT LEVEL setting when the thermostat contacts close again.

OPERATION – ON / OFF mode: When the thermostat contacts close, the unit will light automatically. Once up to temperature, the stove operates the same as in manual mode (see above). When the thermostat contacts open, the unit automatically begins its shutdown routine. The stove will re-light when the thermostat contacts close again.

Turning Your Pellet Stove Off:

•MANUAL and HI / LOW mode: To turn the unit OFF, simply press the ON / OFF button. This will stop the feed of pellets. The blowers will continue to operate and cool the stove down. When cool enough, the stove will turn off.

•ON / OFF mode: To turn the unit OFF, turn the thermostat down or off.

DO NOT unplug unit while Combustion fan is operating.
This may lead to smoke escaping from the stove.

Operating Instructions

Routine Cleaning and Maintenance:

The following list of components should be inspected and maintained routinely to ensure that the appliance is operating at its optimum and giving you excellent heat value:

2-3 DAYS/WEEKLY	SEASON or 2 TONS OF FUEL
Burn Pot and Liner	Exhaust Vent
Ash Pan	Fresh air Intake Tube
Inside Firebox	Blower Mechanisms
Door Glass	Heat exchanger tubes
Heat exchanger tubes	Behind firebox liners
Ash pan and Door gaskets	All Hinges
Door Latch	Post Season Clean-up

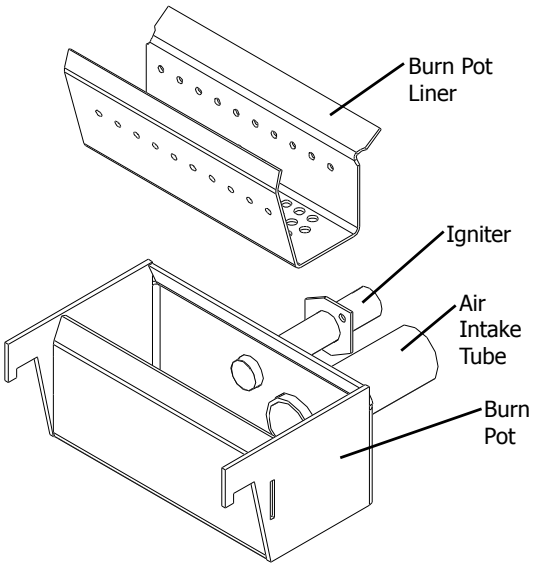

TOOLS REQUIRED TO CLEAN UNIT

Torx T-20 Screwdriver, 5/16" Wrench or Socket, Brush, Soft Cloth, Vacuum with fine filter bag

BURN POT AND LINER (2-3 days)

This is the 'pot' where the pellets are burned. The Burn Pot and Liner should be inspected every two to three days, to ensure proper air flow through the liner**. Failure to keep the liner clean may cause a build up of fuel past the burn pot liner and up the drop tube. This will cause the auger to jam and may result in pellets burning in the drop tube and hopper**. Open the door using the door handle provided located on the right-hand side of the stove, swing the door open. Remove the burn-pot liner from the stove. Using a metal scrapper remove material that has accumulated or is clogging the liner's holes. Then dispose of the scrapped ashes from the liner and from inside the burn-pot. Place the burn-pot back into the stove, making sure that the pipes are properly inserted into the burn pot. Place the liner back into the burn-pot, making sure that the ignitor hole in the liner is aligned with the ignitor tube. Pushing the liner up against the ignitor tube.

- If after long periods of burning the fire continually builds up and overflows the burn pot or there is a build up of clinkers, this is an indication that the pellet fuel quality is poor or the stove may need cleaning. Check the stove for ash build up (clean if required) and adjust the Slider / Damper to produce the proper clean combustion.

ASH PAN AND DOOR GASKETS (weekly)

After excessive use the gasket may come loose. To repair this, glue the gasket on using high-temperature fiberglass gasket glue available from your local ENVIRO dealer. This is important to maintain an airtight assembly.

ASH PAN (weekly)

This part is located under the burner. To remove the ash pan, simply turn the knob and pull out towards the front. Dump the ashes into a metal container stored away from combustibles. Monitor the ash level every week. Remember that different pellet fuels will have different ash contents. Ash content is a good indication of fuel efficiency and quality. Refer to "Warnings and Recommendations" for disposal of ashes.

DO NOT PLACE UNBURNED OR RAW PELLET FUEL IN ASH PAN.

Operating Instructions

HEAT EXCHANGER TUBES (weekly)
A rod is located under the unit top, in the center of the stove just behind the door. This handle is to be pushed in and out a few times **(ONLY WHEN THE UNIT IS COLD)** in order to clean away any fly ash that may have collected on the heat exchanger tubes. As different types of pellets produce different amounts of ash, cleaning of the tubes should be done on a regular basis to enable the unit to run efficiently.

FRESH AIR INTAKE (season)
Inspect periodically to be sure that it is not clogged with any foreign materials.

EXHAUST PASSAGES (season)
Removal of the firebox backing for bi-annual cleaning:

- Open the door by lifting the handle, Remove the burn pot and burn pot liner.
- Lubricate all screws with penetrating oil.
- Remove the four screws that hold the Brick liner retainers in place. Remove Side Brick liner by sliding forward then out.
- Pull the center panel out.
- Vacuum thoroughly.

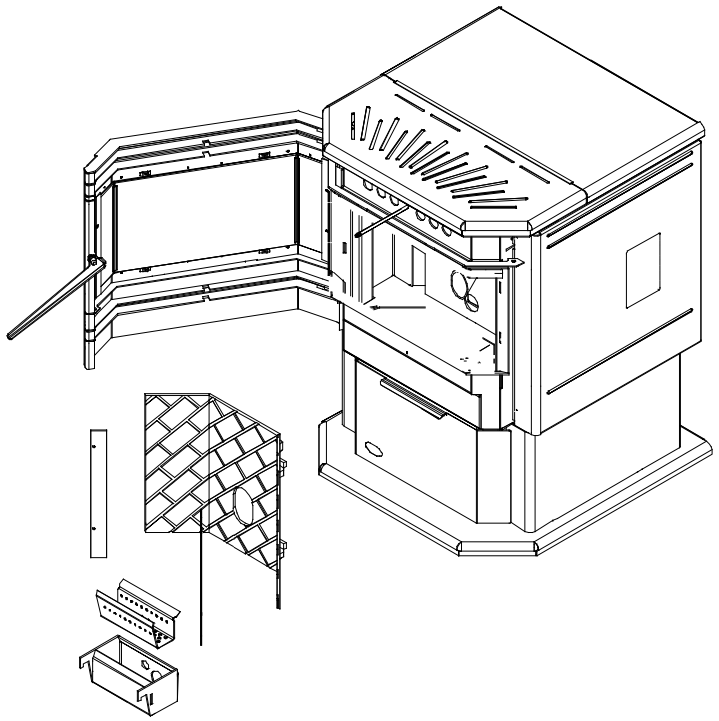

Installation of firebox backing:

- Insert center panel with backing.
- Place the two side panels back into the firebox and reinstall the two retainers using two screws on each side.
- Replace the burn pot and burn pot liner
- Close the glass door and secure.
- Clean thoroughly.

EXHAUST VENT(season)
This vent should be cleaned every year or after two tons of pellets. We recommend contacting your dealer for professional cleaning. To clean the vent pipe, tap lightly on the pipe to dislodge any loose ash. Open the bottom of the "T" to dump the ash, then vacuum as much of the ash out of the vent pipe as possible.

DOOR GLASS
It is recommended that your dealer replace the glass if broken.
The door glass is made of high temperature PYRO CERAMIC 5 MM thick. The center panel is 15.4 x 9.0 inches (39.0 cm x 22.9 cm) and side panels are 2.6 x 9.0 inches (6.7 cm x 22.9 cm). They must be replaced with (PART # EF-062). Substitute materials will not be permitted.

POST SEASON CLEAN-UP
Once you are finished using the pellet appliance for the season, unplug the stove for added electrical protection. It is very important that the stove be cleaned and serviced as stated above.

Installation

Deciding Where to Locate your Pellet Appliance:

1. Check clearances to combustibles.

2. Do not obtain combustion air from an attic, garage or any unventilated space. Combustion air may be obtained from a ventilated crawlspace.

3. Do not install the stove in a bedroom.

4. You can vent the stove through an exterior wall behind the unit or connect it to an existing masonry or metal chimney (must be lined if the chimney is over 6" in diameter, or over 28 sq. inches cross sectional area). An interior vent can be used with approved pipe passing through the ceiling and roof.

5. Locate the stove in a large and open room that is centrally located in the house. This will optimize heat circulation.

6. The power cord is 8 feet (2.43 m) long and may require a grounded extension cord to reach the nearest electrical outlet.

FLOOR PROTECTION

Your MERIDIAN pellet stove requires floor protection. The floor protection must be non-combustible, extending beneath the stove the full width and depth of the unit including 6 " inches in front for ember protection.

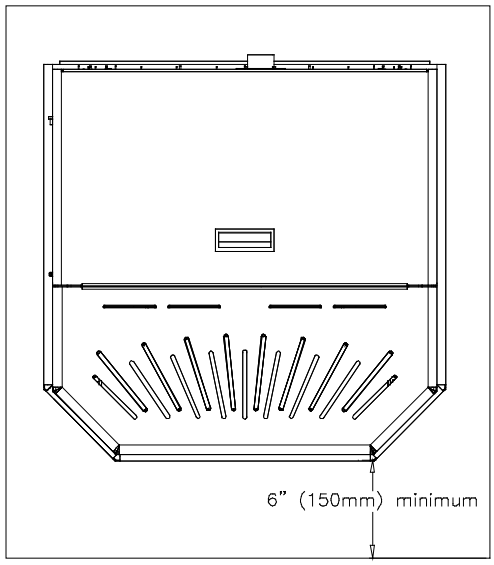

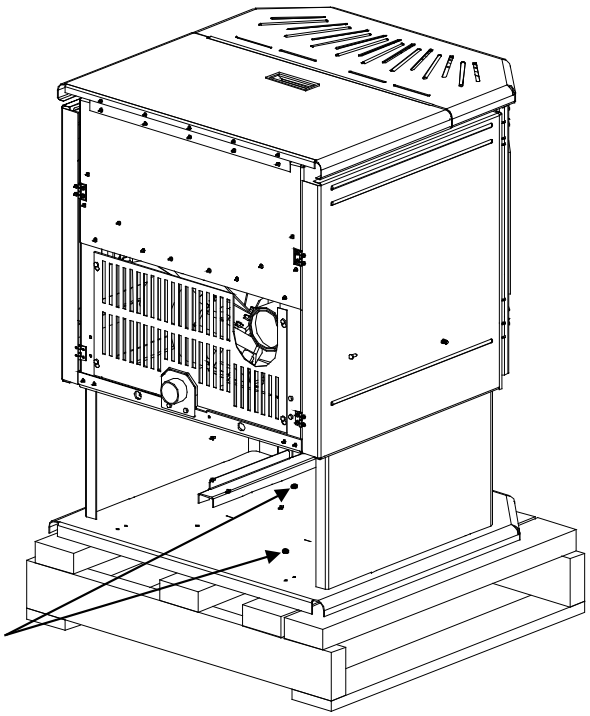

PALLET REMOVAL

To remove your new stove from its pallet, remove the two screws securing the bottom to the pallet. One can be easily seen from behind but to access the second the ashpan must be removed.

Installation

Dimensions:

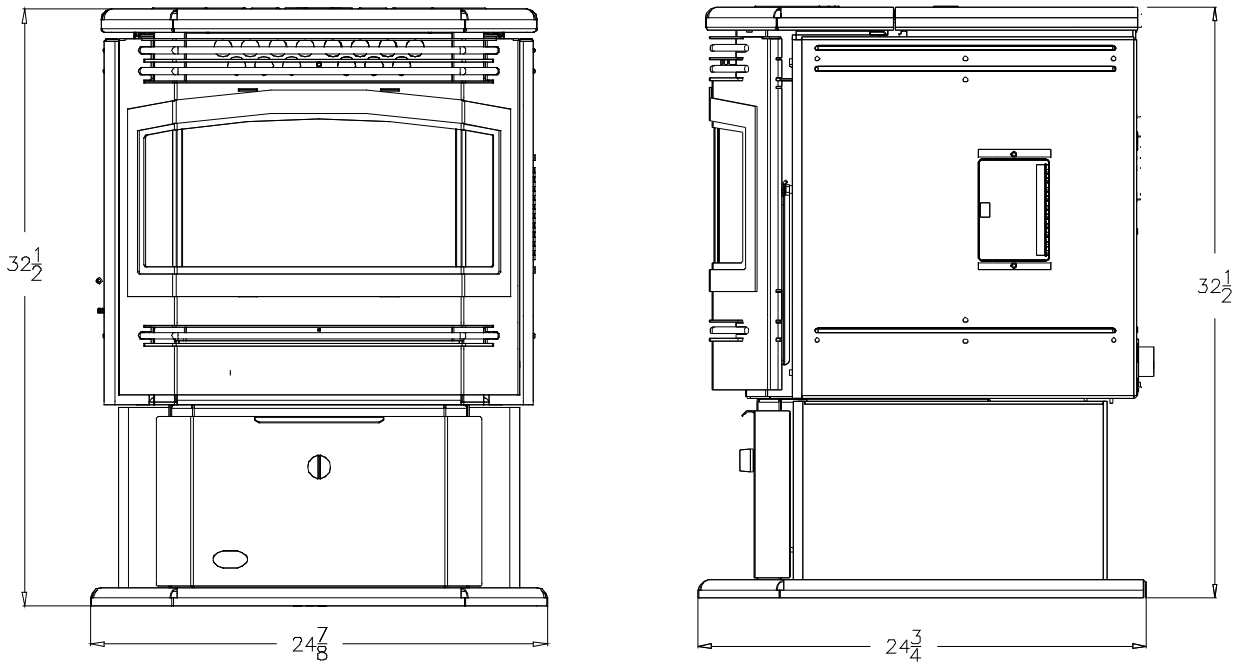

Clearances to Combustibles:

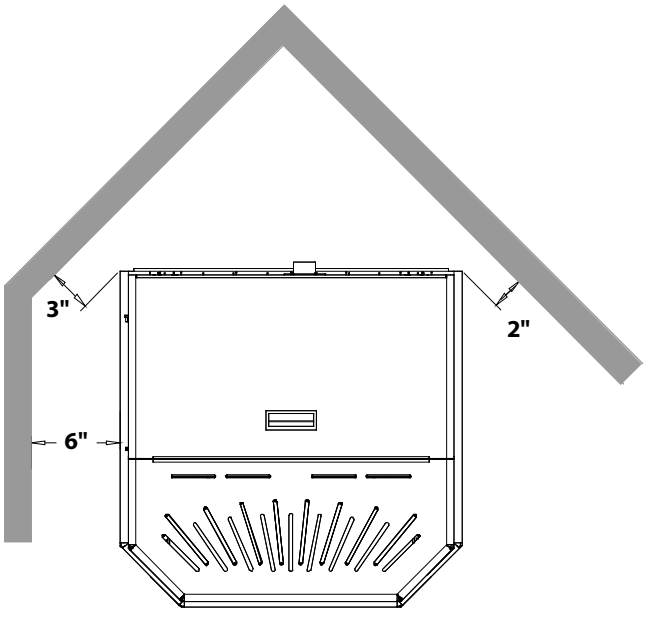

Maintain these clearances to combustibles.

SIDE WALL TO UNIT 6 INCHES (204 MM)
BACK WALL TO UNIT 3 INCHES (76 MM)
ADJACENT WALL 2 INCHES (50 MM)

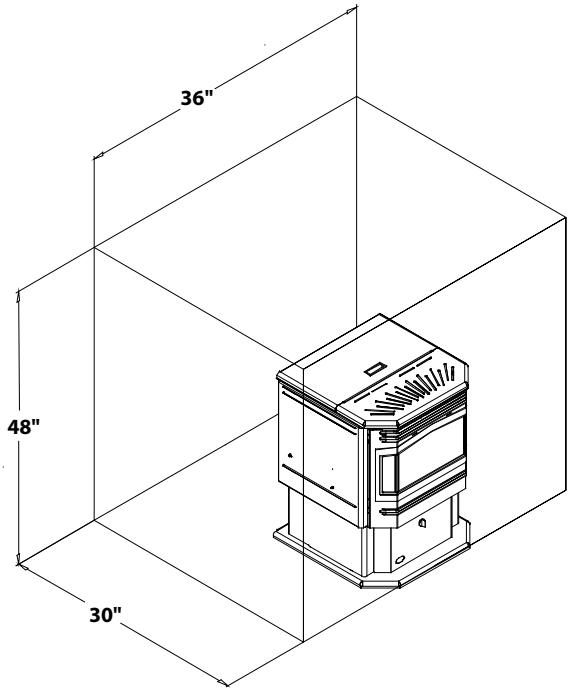

This unit may be installed in an Alcove.

MIN. ALCOVE WIDTH 36 INCHES (900 MM)
MIN. ALCOVE HEIGHT 48 INCHES (1200 MM)
MIN. ALCOVE DEPTH 30 INCHES (750 MM)

Vent Termination Requirements:

1. Do not terminate the vent in any enclosed or semi-enclosed areas such as a carport, garage, attic, crawlspace, narrow walkway, closely fenced area, under a sundeck or porch, or any location that can build up a concentration of fumes such as stairwells, covered breezeway, etc.

2. Vent surfaces can become hot enough to cause burns if touched by children. Non-combustible shielding or guards may be required.

3. Termination must exhaust above the inlet elevation. It is recommended that at least five feet of vertical pipe be installed outside when the appliance is vented directly through a wall, to create some natural draft to prevent the possibility of smoke or odor during appliance shut down or power failure. This will keep exhaust from causing a nuisance or hazard from exposing people or shrubs to high temperatures. In any case, the safest and preferred venting method is to extend the vent through the roof vertically.

4. Vent terminal cannot be:
- less than 4 feet (1.2 m) below
- less than 4 feet (1.2 m) horizontally from, and
- less than 1 foot (305 mm) above doors, window openings, or gravity/ventilation air inlet into building

5. Distance from bottom termination and grade –12" (305 mm) minimum. This is conditional upon the plants and nature of grade surface. The exhaust gases are hot enough to ignite grass, plants and shrubs located in the vicinity of termination. The grade surface must not be lawn. Distance from bottom of termination and public walkways is 7 feet (2.1 m) minimum.

6. Distance to combustible materials is 2 feet (610 mm). This includes adjacent buildings, fences, protruding parts of the structure, roof overhang, plants, shrubs, etc.

7. If the unit is incorrectly vented or the air to fuel mixture is out of balance, a slight discoloration of the exterior of the house might occur. Since these factors are beyond Sherwood Industries Ltd's. control, we grant no guarantee against such incidents.

IT IS RECOMMENDED THAT AN AUTHORIZED DEALER/INSTALLER INSTALL YOUR PELLET STOVE

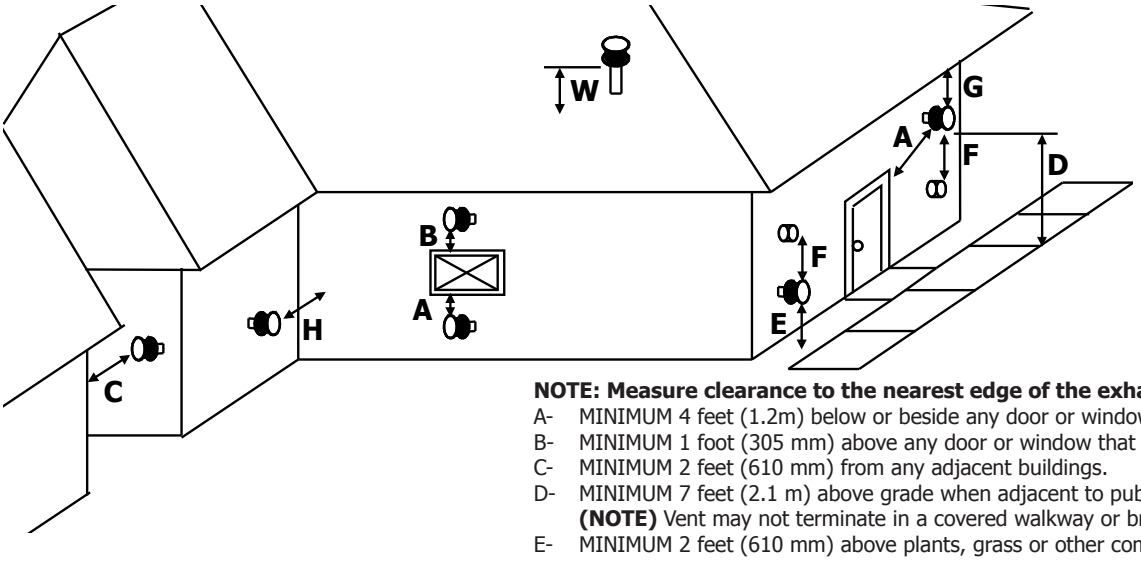

NOTE: Measure clearance to the nearest edge of the exhaust hood

A- MINIMUM 4 feet (1.2m) below or beside any door or window that opens.
B- MINIMUM 1 foot (305 mm) above any door or window that opens.
C- MINIMUM 2 feet (610 mm) from any adjacent buildings.
D- MINIMUM 7 feet (2.1 m) above grade when adjacent to public walkways.
(NOTE) Vent may not terminate in a covered walkway or breezeway.
E- MINIMUM 2 feet (610 mm) above plants, grass or other combustible materials.
F- MINIMUM 3 feet (915 mm) from any forced air intake of other appliances.
G- MINIMUM 2 feet (610 mm) below any eave or roof overhangs.
H- MINIMUM 1 foot (305 mm) clearance to a combustible wall.
W- MINIMUM 2 feet (610 mm) above the roof.

Outside Fresh Air Connection:

Outside fresh air is mandatory when installing this unit in airtight homes and mobile homes. When connecting to an outside fresh air source, do not use plastic, combustible pipe. Only 2" ID (inside diameter) steel, aluminum or copper pipe should be used. It is recommended, when you are installing a fresh air system, to keep the number of bends in the pipe to a minimum.

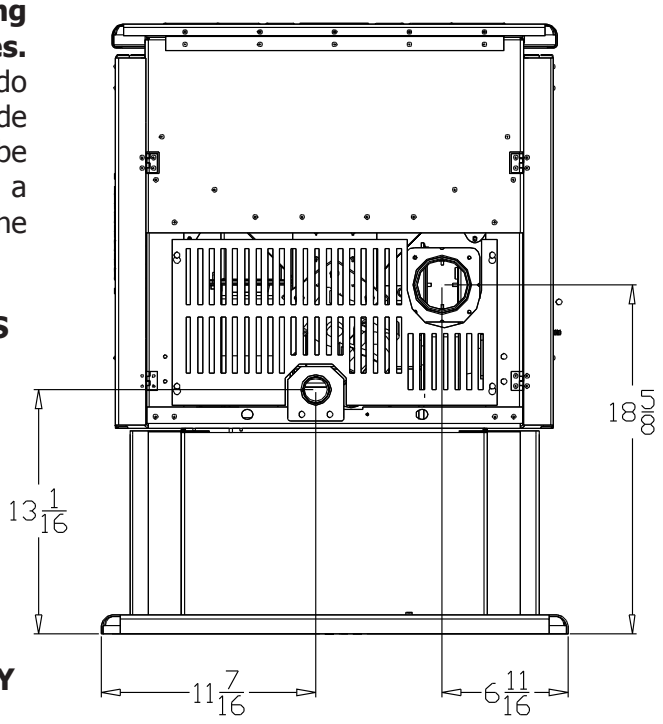

EXHAUST AND FRESH AIR INTAKE LOCATIONS

EXHAUST

Base to center of flue	18 5/8 in.	(47.31 CM)
Side to center of flue	6 11/16 in.	(16.99 CM)

FRESH AIR INTAKE.

Base to center of intake	13 1/16 in.	(33.18 CM)
Side to center of intake	11 7/16 in.	(29.05 CM)

INSTALL VENT AT CLEARANCES SPECIFIED BY THE VENTING MANUFACTURER

Mobile Home Installation:

• Secure the heater to the floor using the holes in the pedestal of the appliance.

• Ensure the unit is electrically grounded to the chassis of your home (permanently).

"WARNING":
DO NOT INSTALL IN A ROOM PEOPLE SLEEP IN.

"**CAUTION**":
THE STRUCTURAL INTEGRITY OF THE MANUFACTURED HOME FLOOR, WALL AND CEILING/ROOF MUST BE MAINTAINED

• Outside fresh air is mandatory. Secure outside air connections directly to fresh air intake pipe and secure with three (3) screws evenly spaced.

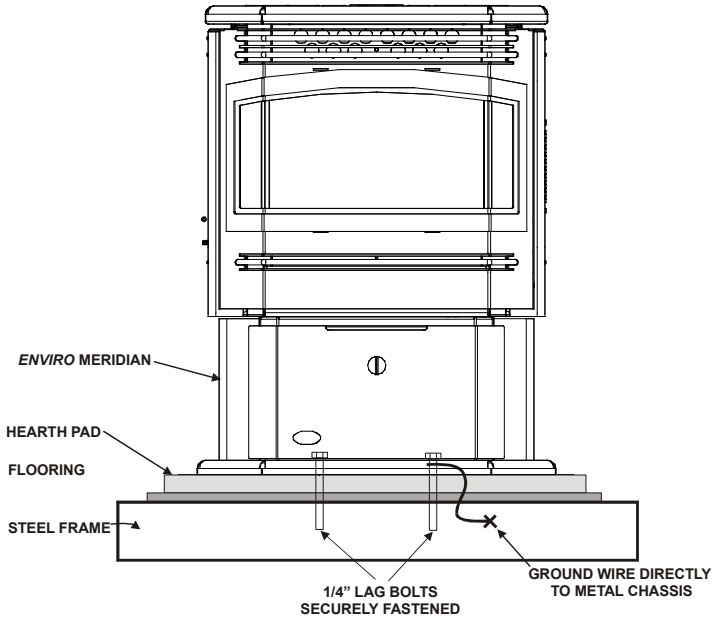

Installation

Through Wall Installation:

The MERIDIAN can be vented through the wall using two different methods. Only use vent of (L or PL) type with an inside diameter of 3 or 4 inches (7.6 or 10.1 cm)

VENT INSTALLATION: INSTALL VENT AT CLEARANCES SPECIFIED BY THE VENT MANUFACTURER.
A chimney connector shall not pass through an attic or roof space , closet or similar concealed spaces, or a floor, or ceiling. Where passage through a wall, or partition of combustible construction is desired, the installation shall conform to CAN/CSA-B365, Installation Code for Solid-Fuel-Burning Appliances and Equipment.

STRAIGHT THROUGH THE WALL.

1. Choose a location for your stove that meets the requirements stated in this manual and allows installation with the least amount of interference to house framing, plumbing, wiring, etc.
2. Place the appliance 15" (37.5 cm) away from the wall. If the stove is to be set on a hearth pad, set the unit on it.
3. Locate the center of the exhaust pipe on the stove. Extend that line to the wall. Once you have located the center point on the wall, use a hole saw to cut a 10" (254 mm) diameter hole for a 3" (76 mm) vent pipe or an 11" (279 mm) hole for a 4" (101 mm) vent pipe.
4. Install the wall thimble as per the instructions written on the thimble. Maintain an effective vapour barrier in accordance with local building codes.
5. Install a length of 3" (76 mm) or 4" (101 mm) vent pipe into the wall thimble. The pipe should install easily into the thimble.
6. Install the fresh air intake.
7. Connect the exhaust vent pipe to the exhaust pipe on the stove. Seal all connections with high temperature silicone
8. Push the stove straight back, leaving a minimum of 3" (7.6 cm) clearance from the back of the stove to the wall. Seal the vent pipe to the thimble with high temperature silicone.
9. The pipe must extend at least 12"(30 cm) away from the building. If necessary, bring another length of pipe (PL type) to the outside of the home to connect to the first section. Do not forget to place high temperature silicone around the pipe that passes through the thimble.
10. Install a vertical pipe, or if all requirements for direct venting are met, install vent termination. The stainless steel cap termination manufactured by the vent manufacturer is recommended. However, when the vent terminates several feet above ground level and there are no trees, plants, etc. within several feet, a 45-degree elbow with rodent screen can be used as a termination. The elbow must be turned down to prevent rain from entering.

NOTE:

• Some horizontal through wall installations may require a "T" and a 3 to 5 foot of vertical pipe outside the building to help natural draft in the unit.

• This may be required if a proper burn cannot be maintained, after the stove has been tested and the airflow set.

• This is due to the backpressure in the exhaust caused by airflow around the structure.

• All sections of pipe must have three (3) screws evenly spaced and all horizontal vent sections must have a bead of high temperature silicone installed on the male end of the pipe before installation to create a gastight seal.

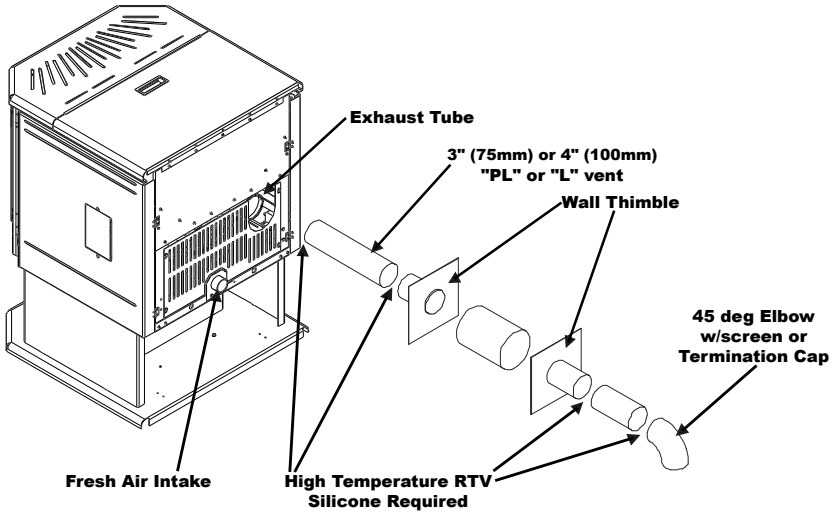

Straight Through Wall Installations:

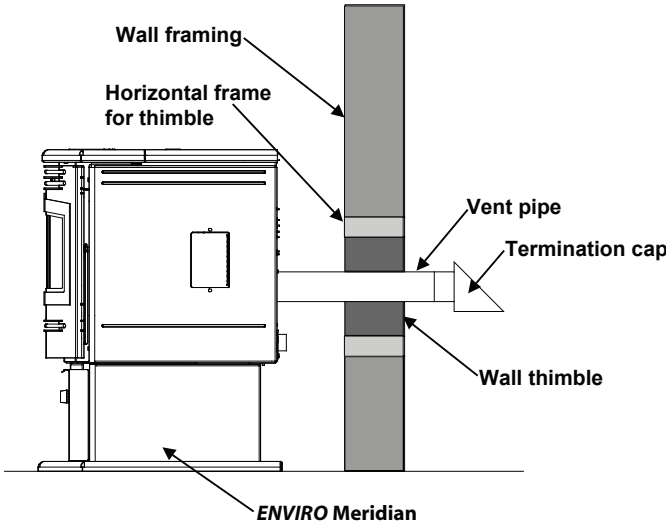

The termination must be 12 inches (30 cm) from the outside wall and 12 inches (30 cm) above the ground.

A 45° elbow with a rodent screen may be used in place of the termination cap (or stainless steel termination hood).

Through Wall With Vertical Rise Installations:

A 45° elbow with a rodent screen may be used in place of the termination cap (or stainless steel termination hood).

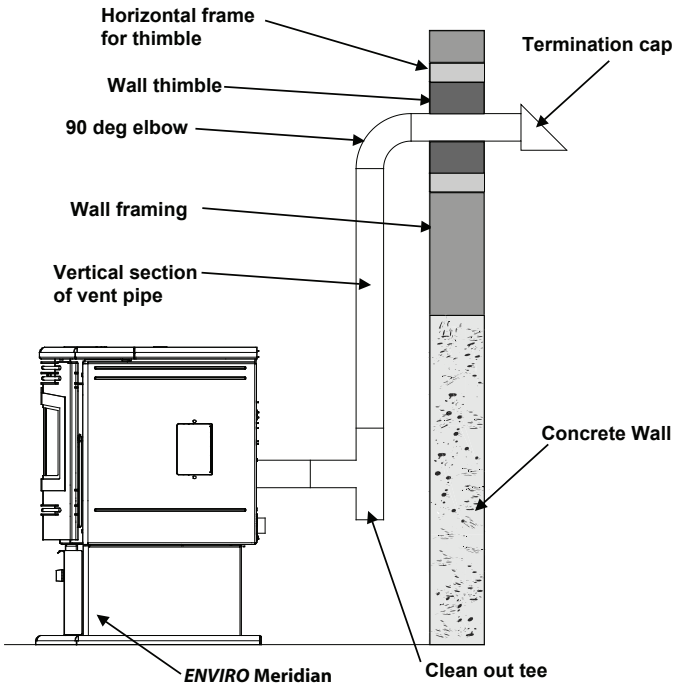

Installation to use if there is a concrete or retaining wall in line with exhaust vent on pellet stove.

The termination must be 12 inches (30 cm) from the outside wall and 12 inches (30 cm) above the ground.

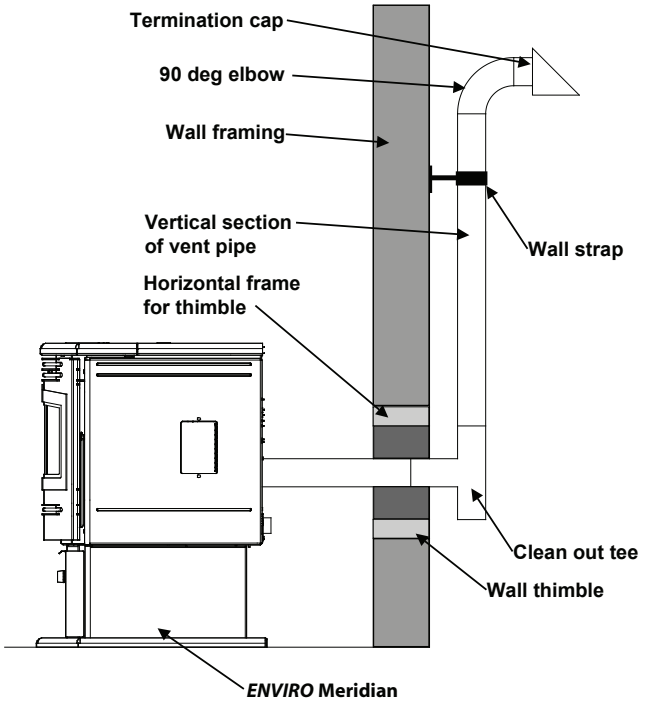

This is the recommended installation set up.

Installation

Vertical Installation:

1. Choose a stove location that is ideal. See the section Deciding Where to Locate Your Pellet Appliance.
2. Place the unit on the hearth pad (if installed on a carpeted surface) and space the unit in a manner so when the pellet vent is installed vertically, it will be 3" (76 mm) away from a combustible wall.
3. Locate the center of the fresh air intake pipe on the unit. Match that center with the same point on the wall and cut a hole about 2 1/8 (53.9 mm) in diameter.
4. Install the fresh air intake pipe.
5. Install the tee with clean out.
6. Install the pellet vent upward from there. When you reach the ceiling make sure that the vent goes through the ceiling fire stop. Maintain a 3" (76 mm) distance to combustibles and keep attic insulation away from the vent pipe. Maintain an effective vapor barrier
7. Finally, extend the pellet vent to go through the roof flashing.
8. Ensure that the rain cap is approximately 36" (900 mm) above the roof.
9. The same methods apply for vertical installation outside. Install wall thimble and pipe supports.

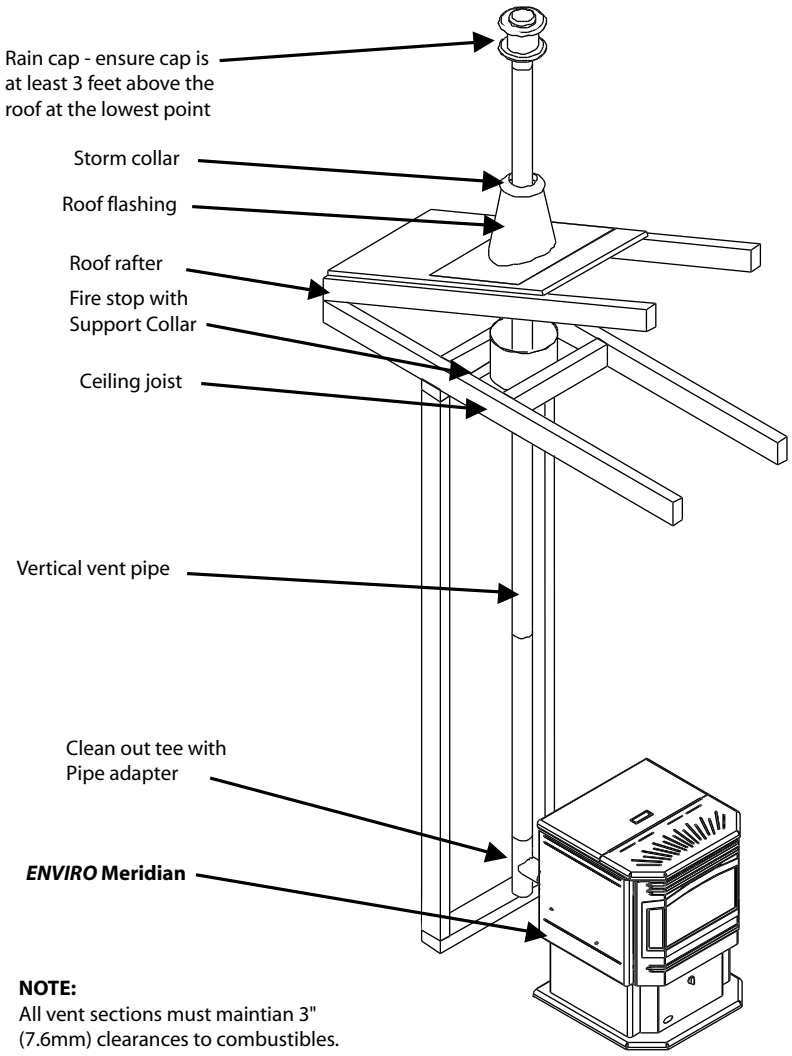

Installation

Hearth Mount Installation:

1. Lock fireplace damper in the open position.
2. Install positive flue connector at the fireplace dampers.
3. Connect a Tee or a 90° degree elbow to the exhaust pipe.
4. Install flexible stainless steel liner or listed pellet vent to the top of the chimney.

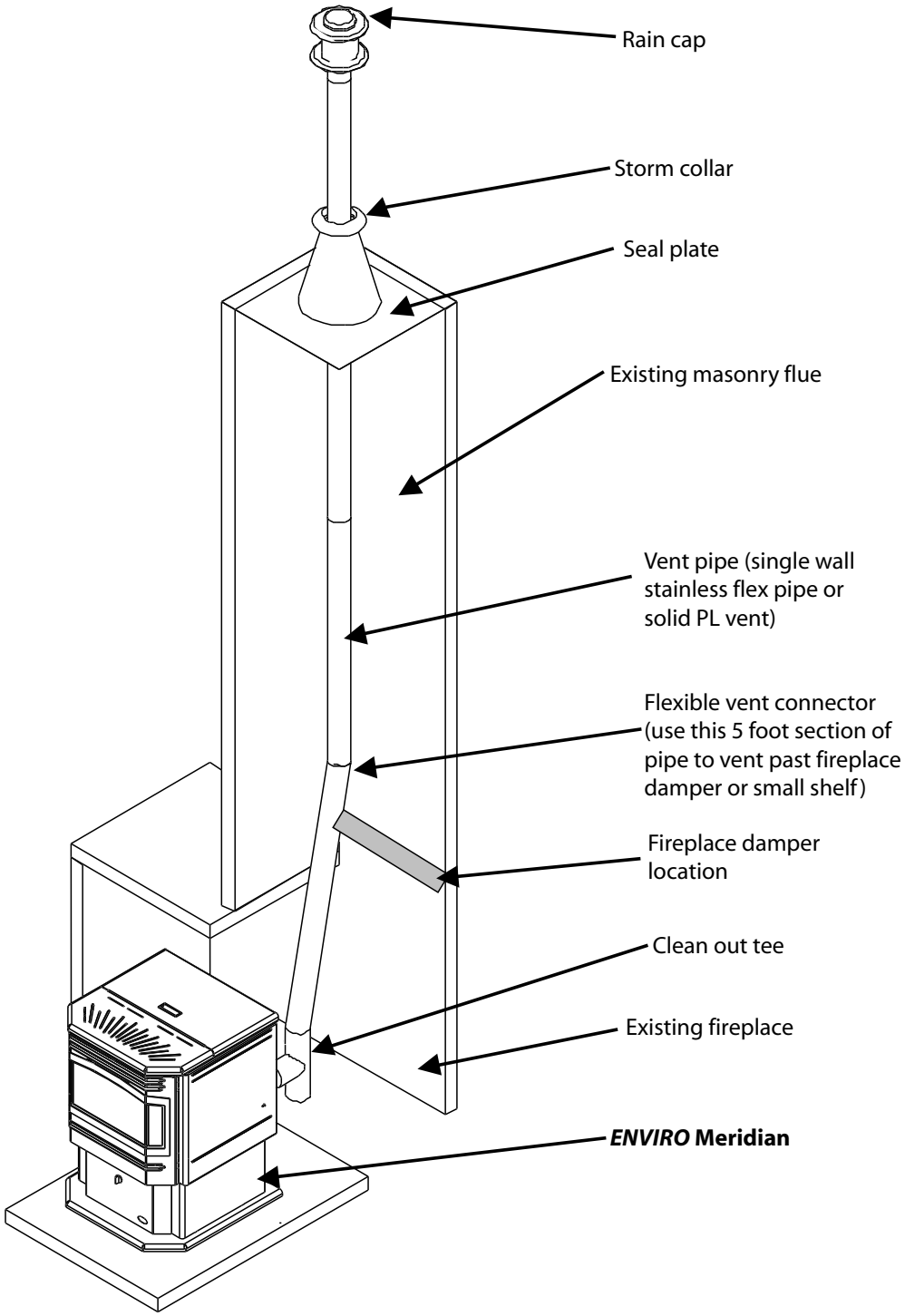

Installation

Exterior Mounted Exhaust Blower:

The MERIDIAN can be equipped with an externally mounted exhaust blower (PART #20-070). This optional kit will include all components necessary to install the exhaust blower on any external vertical wall surface.

Choose a location for your stove that meets the requirements stated in this manual and allows installation with the least amount of interference to house framing, plumbing, wiring, etc.

INCLUDED IN THE EXTERIOR MOUNTED EXHAUST BLOWER KIT ARE:

1. Open the left side of the unit and the back grill and disconnect the Exhaust Blower wires from the harness. Remove the exhaust blower by undoing the six 1/4 hex head sheet metal screws that fasten the blower to the housing.
2. Remove the back grill from the exterior exhaust vent housing and remove the round cover plate installed on the blower housing.
3. Install the round cover plate over the gasketed opening in the stove where the exhaust motor was removed from.
4. Install the exhaust blower motor in the Exterior Vent Housing Box onto the exhaust blower housing.
5. Follow the procedures for "through the wall installations". Place the unit in the desired location. Cut the hole in the wall at the desired location. Install a wall thimble.
6. Drill holes in the wall thimble in the corresponding locations for wire and fresh air if needed. Install wire clamps and feed wire through the hole in the thimble into the house. Tighten clamp on wire and attach green ground wire (at the symbol) with the screw and star washer provided.
7. Attach a short or an adjustable section of 3" of double wall pellet vent through the wall thimble to the stove. Seal all joints with silicone. Maintain clearances to combustibles
8. Apply silicone to the pipe in the Exhaust Box, slide the pipe into the exhaust vent. Mount the Exhaust Box to the house. Reinstall the back grill on the Exterior Vent Housing Box. Apply normal venting practices when installing the vertical vent pipe.
9. Connect the wires in the stove. Re-install the Left side and Back Grill on the stove.
10. Set the Slider Damper as described in SETTING SLIDER / DAMPER INSTRUCTIONS.

Left side with cab side removed

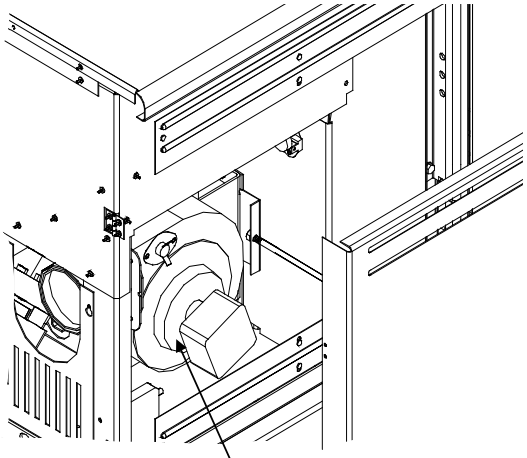

Exhaust motor must be replaced with cover plate.

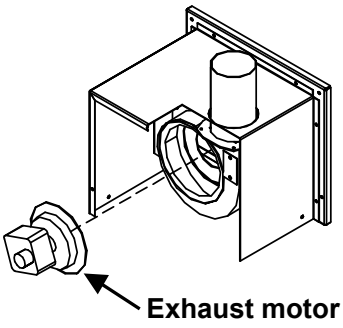

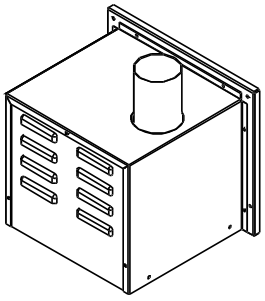

Complete assembly - Exterior blower & housing

Exterior Mounted Exhaust Blower:

NOTE:
Ensure that all vent connections are installed by placing three screws evenly spaced and a small bead of high temperature silicone at each chimney connection. Also ensure that all vertical vent sections are properly supported and that all clearances to combustibles are maintained in accordance with the vent manufacturer's specifications.

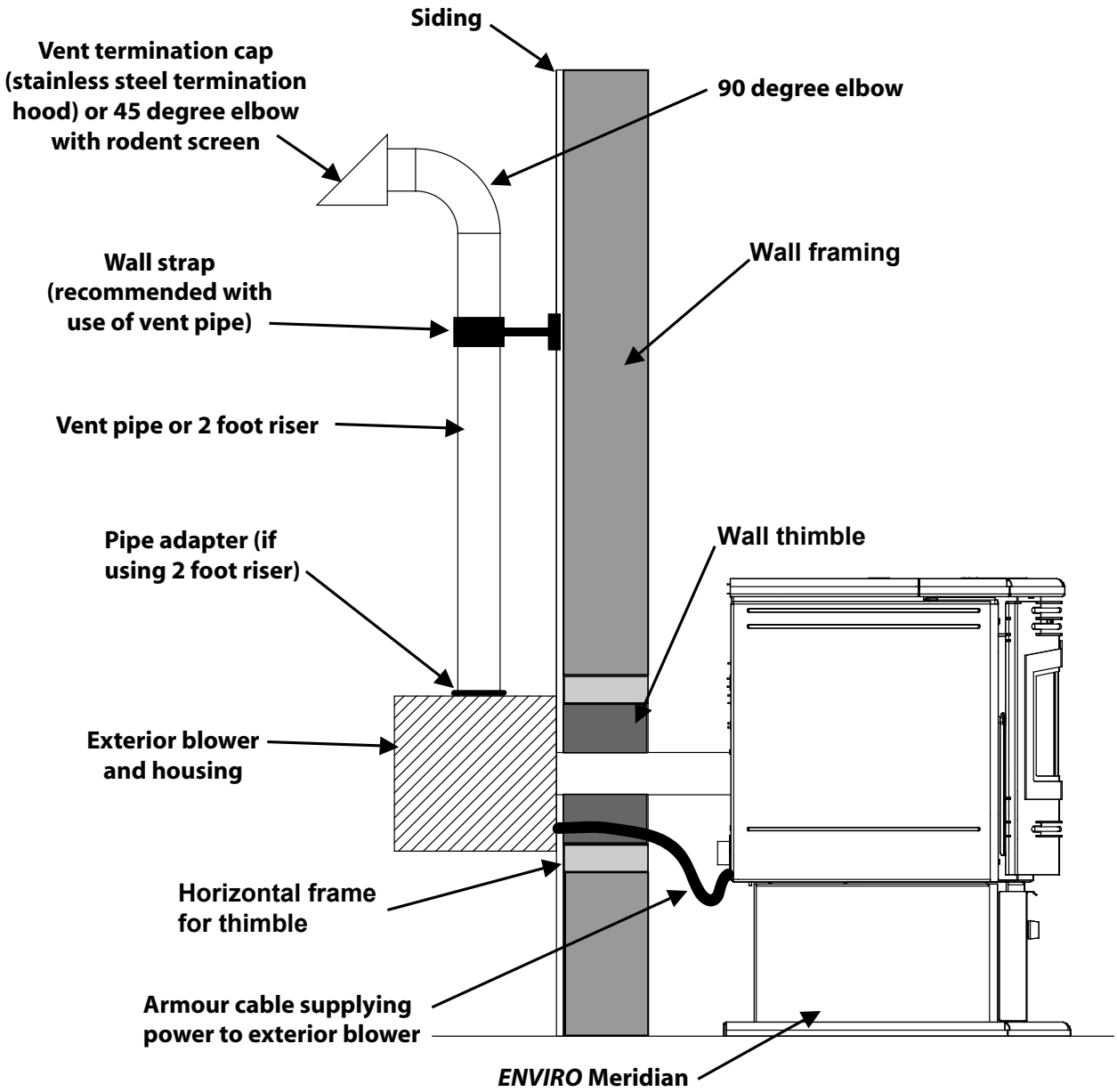

TO SUPPLY POWER TO THE EXHAUST BLOWER:

Install an amour coated electrical cable from the exhaust blower housing, through the wall thimble, and attach to the pre-drilled hole in the left hand rear hopper pillar. Hook up to wires from the wiring harness for the exhaust blower. All electrical connections must be in accordance with local code requirements. (SEE WIRING DIAGRAM Page 28)

Installation

Through Wall Vertical Installation:

Follow the previous pages for through wall installations. Ensure that vent pipe is properly secured to wall using wall straps. Maintain clearances to combustibles on vent pipe as well as unit.

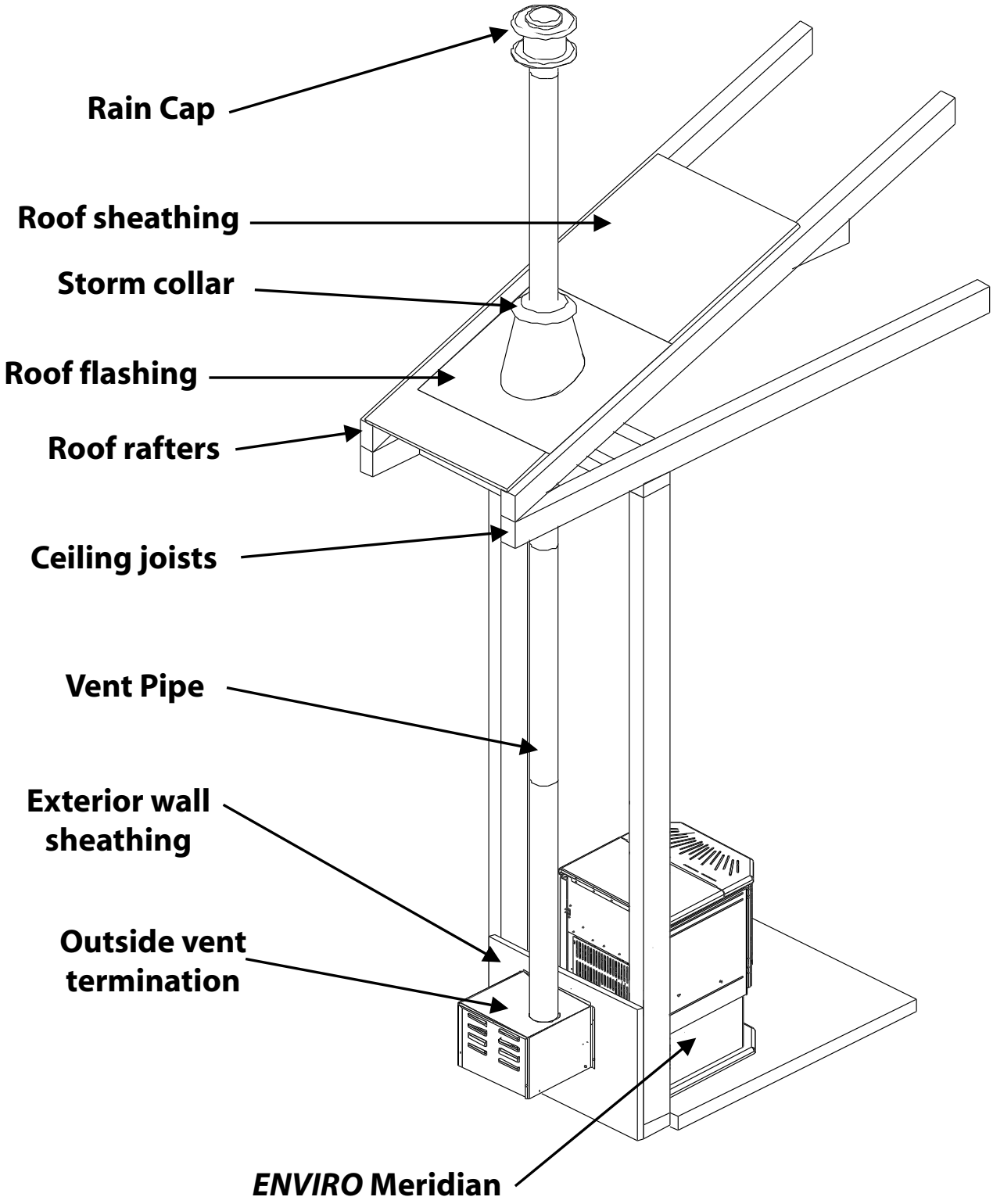

Troubleshooting

DO NOT:

● Service the stove with wet hands. The stove is an electrical appliance, which may pose a shock hazard if handled improperly. Only qualified technicians should deal with possible internal electrical failures.

● Do not remove from the firebox any screws without penetrating oil lubrication.

WHAT TO DO IF:

The stove will not start.

The stove will not operate when hot.

The exhaust blower will not function normally.

The convection blower will not function normally.

Ignitor : The pellets will not light.

The auger motor does not function normally.

Control settings (heat level) has no effect on fire.

The stove will not shut off.

The stove keeps going out.

***NOTE: All troubleshooting procedures should be carried out by qualified technicians or installers.**

The stove will not start

✓Make sure the stove is plugged in and the wall outlet is supplying power..
✓If the Control Board has been placed in the ON /OFF thermostat mode, then turn the thermostat up to call for heat.
✓Check the Heat Level Indicator. - If the # 2 light is flashing (see the # 2 light is flashing)
✓If the unit still does not start, contact your local service dealer for service.

The stove will not operate when hot

✓Check the Heat Level Indicator if a fire is not detected, or if the fire has gone out **the #3 light will flash** because the Exhaust Temperature Sensor's contacts have opened.
✓Check the hopper for fuel.
✓Incorrect air damper setting. - Excessive air may consume the fire too quickly before the next drop of fuel, leaving completely unburned fuel in the burn pot liner. - Insufficient air will cause build up, further restricting the air flow through the Burn Pot Liner. This in turn will cause the fuel to burn cold and very slowly. Fuel may build up and smother the fire. **(NOTE: unit may require a change to the vent system or installation of fresh air to correct Air to Fuel ratio problems).**

✓Combustion Blower failure. - The Combustion Blower is not turning fast enough to generate the proper vacuum in the fire box. Visual Check – is the blower motor turning.

Troubleshooting

✓Check the Exhaust Blower voltage across the blower wires (>=114v on #5 setting and >= 82v on #1 setting). – Replace the Circuit Board if the Voltage reading is less than 82v. with a line voltage >115vac.

✓Check Vacuum levels in the exhaust channel by bypassing the Vacuum Switch, then remove the Vacuum hose from Vacuum Switch. Check exhaust vacuum readings by placing the open end of the Vacuum Hose on a Magnahelic Gauge. (readings must be above .10" W.C. on low fire).

If the motor fails to reach a 0.10" w.c. readings, then replace the Combustion Blower.

✓Poor Quality Fuel – Insufficient energy in the fuel to produce enough heat to keep the stove burning or operational.

✓Exhaust Temperature Sensor failure. – Bypass sensor located on Exhaust Blower if stove now operates properly, the unit may require cleaning or a new sensor. Contact your local dealer for service.

The exhaust motor will not function normally

✓Open the left side access panel; check all connections against the wiring diagram.
✓See above section.

Light # 2 on Heat output bar flashing – The Vacuum Switch contacts have opened for more than 15 sec.

✓Pinch, break or blockage in Vacuum Hose - Check hose for pinch points or damage, replace or re-route as required. Blow out Vacuum Hose

✓Blocked Hose Barb on Exhaust Channel - Use a paper clip to clean out Hose Barb or remove the Vacuum Hose from the Vacuum Switch and blow into the hose to remove blockage.

✓Blocked exhaust / venting system - Have stove and venting cleaned and inspected.

✓Severe negative pressure in area where unit is installed - Check the operation by opening a window, does this solve the problem? If it does, install fresh air intake to unit or room. Venting system may require vertical section to move termination into a low pressure zone.

✓Vacuum Switch failure - Bypass the vacuum switch, if this corrects the problem check for above problems before replacing the Vacuum Switch.

✓Damage to gray wires between Circuit Board and Vacuum Switch - Inspect wires and connectors

✓Combustion Blower failure - The Combustion Blower is not turning fast enough to generate the proper vacuum in the Exhaust Channel. Visual Check; is the blower motor turning? Check the Exhaust Blower voltage across the blower wires (>=114v on #5 setting and >= 82v on #1 setting). Replace the Circuit Board if the Voltage reading is less than 82v. with a line voltage >115vac.

✓Check Vacuum levels in the exhaust channel by bypassing the vacuum switch, then remove the Vacuum hose from Vacuum Switch. Check exhaust vacuum readings by placing the open end of the Vacuum Hose on a Magnahelic Gauge. (readings must be above .10" W.C. on low fire).

If the motor fails to reach a 0.10" w.c. readings, then *replace* the Combustion Blower

To reset Circuit Board after a trouble code - push the ON/OFF button

Troubleshooting

Auger light flashes but auger motor does not turn at all:

✓If the Auger gear box does not turn but the motor's armature does try to spin then the auger is jammed. – Try to break apart jam by poking at the jam through the drop tube. If this fails then empty the hopper and remove the Auger Cover **Remember to re-seal the cover after installation**

The 200F (93C) high limit temperature sensor has tripped.

✓Reset sensor and determine cause – was it Convection Blower failure or 160F (71C) Temperature Sensor failure? Bypass the 160 sensor, does the Convection blower come on high if not replace the blower?

The convection blower will not function normally

✓Clean all grill openings at the back and below unit .
✓Press the fan button; does the fan come on? Press again to verify that the blower turns on; if, not contact your local dealer for service.

Igniter- the pellets will not light

✓Everything else in the stove operates but the ignitor will not light the pellets.
✓Make sure the burn pot liner is up tight and square to the ignitor tube by pushing the burn pot back against the ignitor tube.
✓Check to see if the exhaust blower is operating. If not, contact your local dealer for service.

-

NOTE: The ignitor should be bright orange in color. If not replace the ignitor.

Control settings (Heat Level) has no effect on the fire

✓NOTE: If the system light is flashing the Control Board has complete control of the unit. When the units system light becomes solid then control of the unit is given back to the operator.
✓If there is no control of the Heat Level button make sure the thermostat is calling for heat.
✓Call your local dealer for service.

The stove keeps going out

If the stove goes out and leaves fresh unburned pellets or cigarette-like ashes in the burn pot liner, the fire is going out before the stove shuts off.

✓Check to see that the Slider / Damper is in the correct position.
✓Turn the Heat Level up slightly (poor quality pellets will require slightly higher settings).
✓Set the auger trim till the #1 and #5 lights are illuminated.

If the stove goes out and there are partially burned pellets left in the burn pot liner, the stove has shut down due to a lack of air, exhaust temperature, or power failure.

✓Adjust the Slider / Damper.
✓Check to see if the stove needs a more complete cleaning.
✓Turn the Heat Level up slightly (poor quality pellets will require slightly higher settings).
✓Did the power go out?
✓Contact your local Dealer for service.

Wiring Diagram

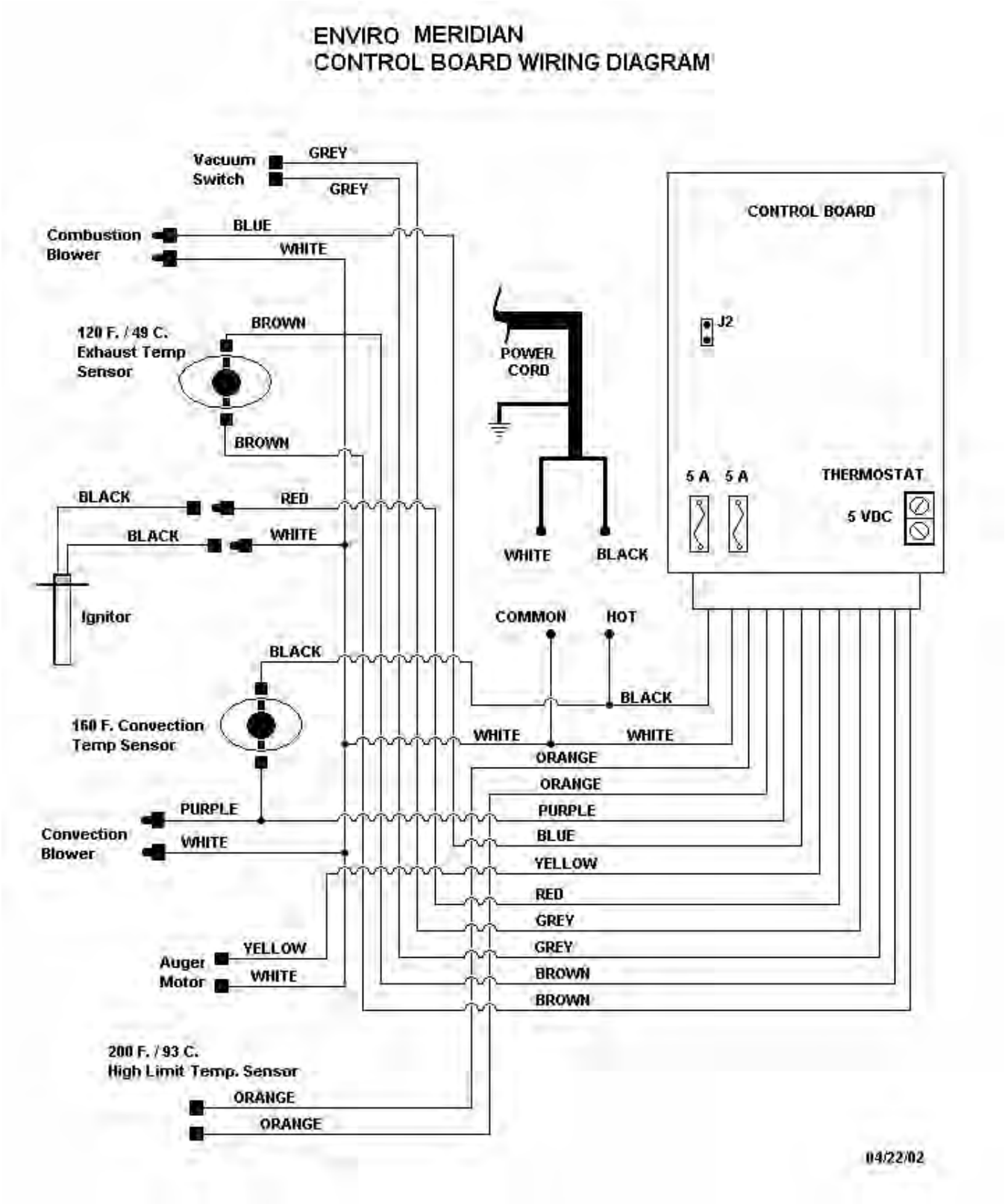

Parts List

Part Number	Description
20-040	EF2/3/4/5/MER Control Panel Door
50-178	WINDSOR/MERIDIAN Circuit Board 115V
50-323	EF2/3/4/5/SOLUS/MER Control Panel Touch Latch
50-330	EF5/MERIDIAN Circuit Board Control Panel
50-474	WINDSOR/MERIDIAN SS Burn Pot Liner
50-620	MERIDIAN Body Trim Kit - Pewter
50-621	MERIDIAN Body Trim Kit - Gold
50-622	MERIDIAN Body Trim Kit - Antique Copper
50-623	MERIDIAN Door Cover - Pewter
50-624	MERIDIAN Door Cover - Gold
50-625	MERIDIAN Door Cover - Antique Copper
50-653	MERIDIAN Door
50-654	MERIDIAN Louver Bar Set - Painted
50-655	MERIDIAN Louver Bar Set - Gold
50-656	MERIDIAN Louver Bar Set - Pewter
50-657	MERIDIAN Louver Bar Set - Antique Copper
50-658	MERIDIAN Burn Pot
50-659	MERIDIAN FS Ash Pan
50-660	MERIDIAN FS Pedestal
50-661	MERIDIAN Cabinet Side Left
50-662	MERIDIAN Lower Cabinet Trim (1pc) - Painted
50-663	MERIDIAN Lower Cabinet Trim (1pc) - Gold
50-664	MERIDIAN Lower Cabinet Trim (1pc) - Pewter

Part Number	Description
50-665	MERIDIAN Lower Cabinet Trim (1pc) - Antique Copper
50-666	MERIDIAN Upper Cabinet Trim (1pc) - Painted
50-667	MERIDIAN Upper Cabinet Trim (1pc) - Gold
50-668	MERIDIAN Upper Cabinet Trim (1pc) - Pewter
50-669	MERIDIAN Upper Cabinet Trim (1pc) - Antique Copper
50-670	MERIDIAN Cabinet Side Right
50-671	MERIDIAN Top Trim - Painted
50-672	MERIDIAN Top Trim - Gold
50-673	MERIDIAN Top Trim - Pewter
50-674	MERIDIAN Top Trim - Antique Copper
50-675	MERIDIAN Back Grill
50-676	MERIDIAN Hopper Lid
50-677	MERIDIAN Top Front
50-680	MERIDIAN Tube Cleaner Rod
50-681	MERIDIAN Brick Panel Set
50-682	MERIDIAN Brick Retainer Ser
50-683	MERIDIAN Door Cover - Painted
50-685	MERIDIAN Ignitor
EF-002	EF2/3/MER Convection Blower 115V
EF-013	EF2/3/4/SOLULS/WIN/MER Fan Temp Sensor 160°F
EF-025	EF2/3/MER Auger
EF-028	EF3Bi/MERIDIAN Door Handle Complete
EF-062	EF3Bi/MERIDIAN Glass Set w/ Tape
EF-064	EF2/3/MER Slider Damper Plate (Post 11/93)

Parts Diagram - Steel

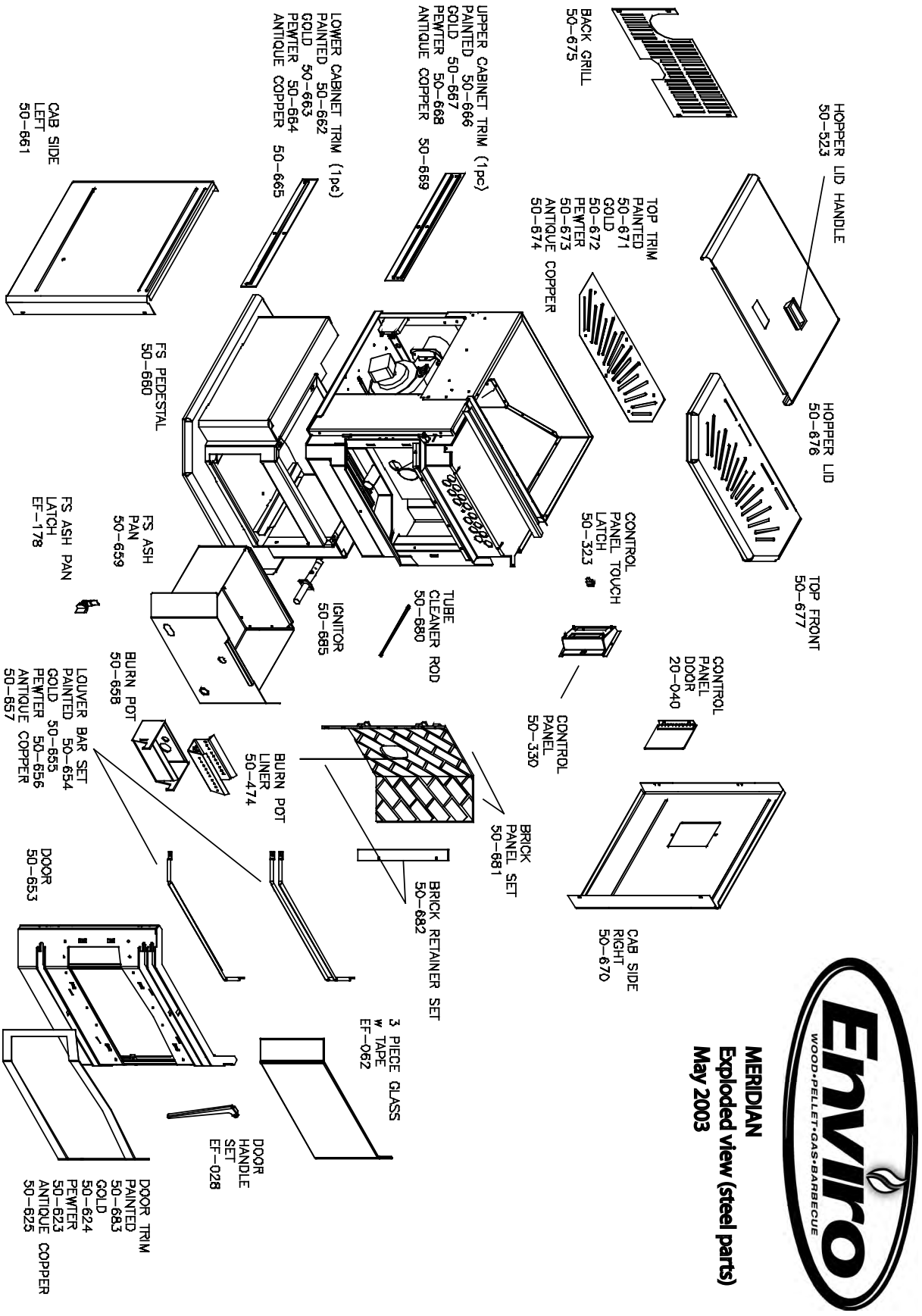

Parts Diagram - Components

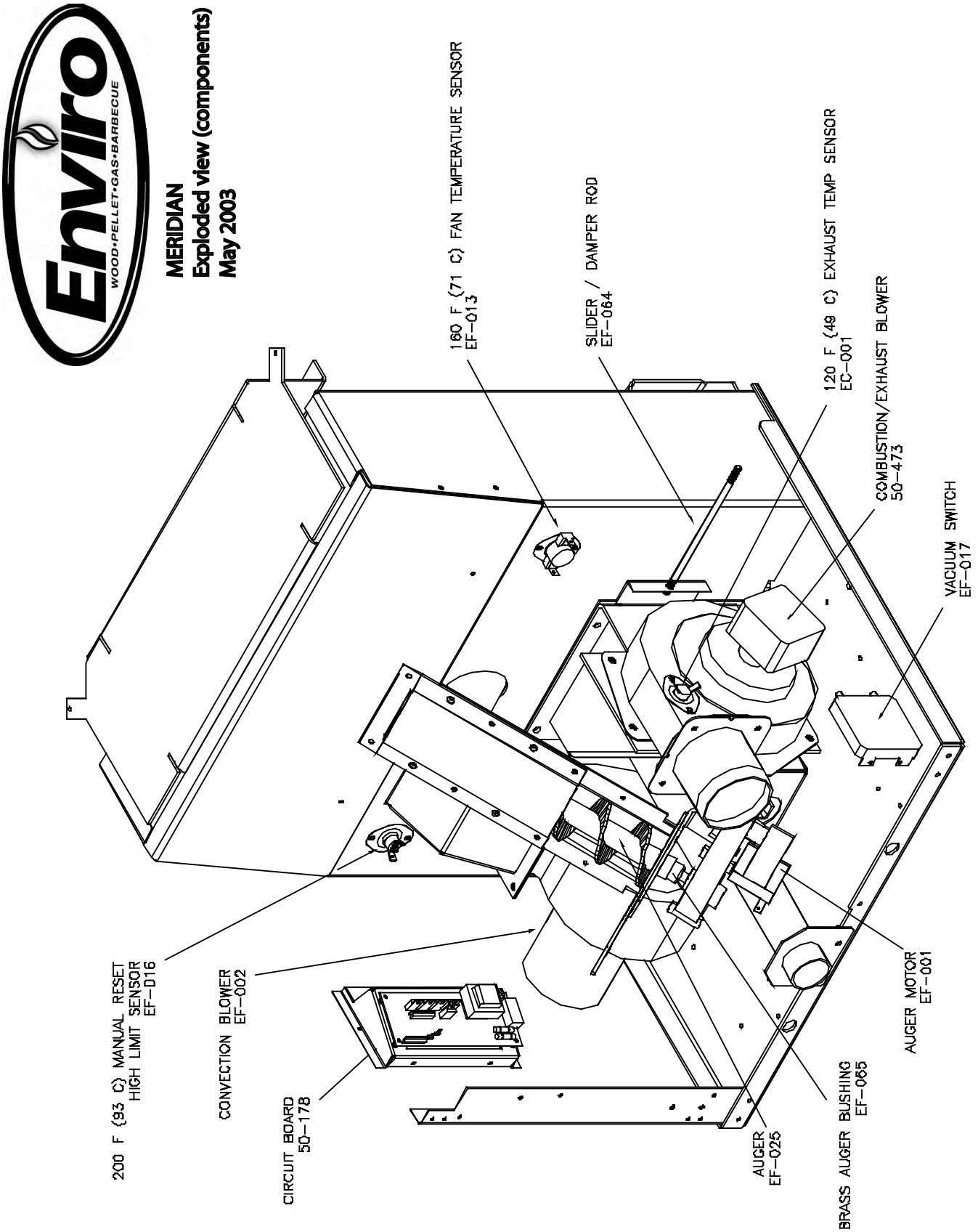

Warranty

Sherwood Industries Ltd. gives a five year limited warranty on all steel manufactured parts. A one-year warranty is provided on all electrical components. The above limited warranties are extended only to the original purchaser.

There is no warranty on the following parts:

- Fiberglass rope baskets
- refractory material
- burn pot liner
- paint
- enamel finish or gold plating where it applies
- vacuum hose.

****NOTE:** The paint on the brick firebox lining may peel. This is due to the extreme conditions applied to the paint and is in no way covered under warranty.

WHEN FILING A WARRANTY CLAIM PLEASE COMPLETE THE FOLLOWING INFORMATION ON AN OFFICIAL WARRANTY CLAIM FORM:

TO THE DEALER:

- Name, Address and Telephone Number of purchaser and date of purchase.
- Date of Installation. Name of the installer and dealer. Serial Number of the appliance. Nature of the compliant, defects or malfunction, description and part # of any parts replaced.

TO THE DISTRIBUTOR:

- Sign and verify that work and information are correct.

ENSURE THAT YOU SPECIFY THE NATURE OF THE COMPLAINT, DEFECT, PERIODICAL MALFUNCTION, ETC.

The limited warranty covers defects in materials and workmanship as long as the products has been installed according to the manual's instruction. If the product is damaged or broken as a result of mishandling or misuse, the warranty does not apply. Removal and re-installation costs are not covered under this warranty.

It is the manufacturer's option whether to repair or replace the appliance. The shipping cost to and from the factory is paid by the consumer. All warranties by the manufacturer are set forth herein and no claim shall be made against the manufacturer on any oral warranty or representation.

Sherwood Industries Ltd. assumes no responsibility for damage caused by household power fluctuations or power surges.

Under Warranty

For the do-it-yourself Individual

The consumer should be aware that the pellet appliance needs setting using tools that he/she might not have. Consult an ENVIRO dealer. It is recommended than only an authorized ENVIROFIRE dealer installs an ENVIRO unit. There will be no warranty coverage on parts destroyed or burnt out as a result of a consumer installation error or defect.

Sherwood Industries Ltd. reserves the right to make changes without any notice.

Installation Data Sheet

The following information must be recorded by the installer for warranty purposes and future reference.

NAME OF OWNER:

_____

ADDRESS:

_____

_____

_____

PHONE:_____

NAME OF DEALER:

_____

ADDRESS:

_____

_____

_____

PHONE:_____

MODEL:_____

SERIAL NUMBER:_____

DATE OF PURCHASE: _____ (dd/mm/yyyy)

DATE OF INSTALLATION:_____(dd/mm/yyyy)

MAGNEHELIC AT INSTALL:_____

INSTALLER'S SIGNATURE:

_____

NAME OF INSTALLER:

_____

ADDRESS:

_____

_____

_____

PHONE:_____

MANUFACTURED BY:
SHERWOOD INDUSTRIES LTD.
6782 OLDFIELD RD. SAANICHTON, BC, CANADA V8M 2A3
www.envirofire.biz
June 12, 2003
C-10040