SHERWOOD INDUSTRIES IS AN ENVIRONMENTALLY RESPONSIBLE COMPANY. THIS MANUAL IS PRINTED ON RECYCLED PAPER.

PLEASE KEEP THESE INSTRUCTIONS FOR FUTURE REFERENCE

Enviro

DV50DX

BY: SHERWOOD INDUSTRIES LTD

OWNER'S MANUAL

WHAT TO DO IF YOU SMELL GAS

- **Open windows/extinguish any open flame.**
- **Do not try to light any appliance.**
- **Do not touch any electrical switch or use any phone in your building.**
- **Immediately call your gas supplier from a neighbour's phone. Follow the gas supplier's instructions.**
- **If you cannot reach your gas supplier, call the fire department.**

This appliance may be installed in an after-market permanently located, manufactured (mobile) home, where not prohibited by local codes.

This appliance is only for use with the type of gas indicated on the rating plate. This appliance is not convertible for use with other gases, unless a certified kit is used.

WARNING

If the information in this manual is not followed exactly, a fire or explosion may result causing property damage, personal injury or loss of life. Installation and service must be performed by a qualified installer, service agency or the gas supplier.

FOR YOUR SAFETY

Do not store or use gasoline or other flammable vapours and liquids in the vicinity of this or any other appliance.

INTERTEK C Warnock Hersey US

Massachusetts installations (Warning): This product must be installed by a licensed plumber or gas fitter when installed within the Commonwealth of Massachusetts. Other Massachusetts code requirements: Flexible connector must not be longer than 36in, shut-off valve must be a "T" handle gas cock; only direct vent sealed combustion products are approved for bedrooms/bathrooms; fireplace dampers must be removed or welded in the open position prior to the installation of a fireplace insert or gas log.

Safety Precautions

FOR SAFE INSTALLATION AND OPERATION OF YOUR "ENVIRO" HEATER, PLEASE CAREFULLY READ THE FOLLOWING INFORMATION:

- All ENVIRO gas-fired appliances must be installed in accordance with their instructions. Carefully read all the instructions in this manual first. Consult the building authority having jurisdiction to determine the need for a permit prior to commencing the installation.
- **NOTE:** Failure to follow these instructions could cause a malfunction of the fireplace, which could result in death, serious bodily injury, and/or property damage.
- Failure to follow these instructions may also void your fire insurance and/or warranty.

GENERAL

- Installation and repair should be done by a qualified service person. The appliance should be inspected before the first use and, annually thereafter by a qualified service person. More frequent cleaning may be required due to excessive lint from carpeting, bedding material, etc. It is imperative the control compartments, burners and circulating air passageways of the appliance be kept clean.
- Due to high temperatures, the appliance should be located out of high traffic areas and away from furniture and draperies.

Children and adults should be alerted to the hazards of high surface temperatures and should stay away to avoid burns or clothing ignition.

Young children should be carefully supervised when they are in the same room as the appliance.

FOR YOUR SAFETY

- Installation and service must be performed by a qualified installer, service agency or gas supplier.
- This installation must conform to local codes or, in the absence of local codes, to the current CAN/CGA-B149 installation code (Canada) or National Fuel Gas Code ANSI Z223.1.2 (USA)
- To prevent injury, do not allow anyone who is unfamiliar with the stove to operate it.

- **To prevent injury, if the pilot or pilot and burners have gone out on their own, open the glass door and wait 5 minutes to air out before attempting to re-light the stove.**

- Always keep the area around this appliance clear of combustible material, gasoline and other flammable liquids and vapours.
- This appliance should not be used as a drying rack for clothing or for hanging Christmas stockings/ decorations.
- Due to the paint curing on the stove, a faint odor and slight smoking will likely be noticed when the stove is first used. Open a window until the smoking stops.

Always connect this gas stove to a vent system and vent to the outside of the building envelope. Never vent to another room or inside the building. Make sure the specified vent pipe is used; properly sized and of adequate height to provide sufficient draft. Inspect the venting system annually for blockage and signs of deterioration.

WARNING: Failure to position the parts in accordance with the diagrams in this booklet, or failure to use only parts specifically approved with this appliance may result in property damage or personal injury.

WARNING: Do not operate with the glass front removed, cracked or broken. Replacement of the glass must be done by a licensed or qualified service person.

- Never use solid fuels such as wood, paper, cardboard, coal, or any flammable liquids, etc., in this appliance.
- Do not use this heater if any part has been under water. Immediately call a qualified service technician to inspect the heater and to replace any part of the control or gas control systems that have been under water.
- Do not abuse the glass by striking it or slamming the door shut.

Table of Contents

Safety Precautions....2
Table of Contents....3
Codes And Approvals....4
Specifications....5
- Dimensions....5
- Rating Label Location....5

Operating Instructions....6
- Before lighting....6
- Pilot Lighting Instructions....6
- Burner lighting....7
- Remote controls....7
- Air Diverter controls....7
- Blower speed....7

Maintenance And Service....8
- Routine Maintenance....8
- Fuel Conversion....9

Initial Installation....10
- Introduction....10
- Placement....10
- Corner Installation....11
- Raised Fireplaces and Hearths....11
- Fireplace Surround....12
- Mantle Clearances....13
- Vent Parts and Terminal Clearances....13
- Vent Termination Restrictions....14
- Venting....15
- Vent Configurations and Restrictor Settings....16
- Horizontal Termination....17
- Vertical Termination....18
- Ducting....20
- Electrical System....21
- Gas Line Connection....22

Secondary Installation Venting....23
- Glass Removal....23
- Log Set and Ember Installation....23
- Log Set Assembly....24
- Pilot Light....26
- Venturi Adjustment....26

Trouble Shooting....27
Warranty....28
Parts List....29
Parts Diagram....30
Index....31
Installation Data Sheet....32

Codes And Approvals

DIRECT VENT: This type is identified by the prefix DV. This appliance draws all of its' air for combustion from outside the dwelling, through a specially designed vent pipe system.

**** TOP VENT DV ONLY** Certified for installation from 0-4500 FT (1372 M)**

- This appliance has been tested by INTERTEK - ETL SEMKO (**Warnock Hersey**) and found to comply with the established standards VENTED GAS FIREPLACE HEATER in CANADA and the USA as follows:

VENTED GAS FIREPLACE HEATER (DV50DX) (NG/LPG)

TESTED TO: ANSI Z21.88a.2002 CSA 2.33a.2002 VENTED GAS FIREPLACE HEATER

CAN/CGA 2.17-M91 GAS FIRED APPLIANCES FOR HIGH ALTITUDES

This ENVIRO DV50DX Fireplace:

- Has been certified for use with either natural or propane gases. (See rating label.)
- Is not for use with solid fuels.
- Is approved for bedroom or bed sitting room. (Canada: must install an approved wall thermostat)
- Must be installed in accordance with local codes. If none exist, use current installation code CAN/CGA B149 in Canada or ANSI Z223.1/NFPA 54 in the USA.
- Must be properly connected to a venting system and not connected to a chimney flue serving a separate solid-fuel burning appliance.

Specifications

INSTALLATION OPTIONS:

- Parallel to a wall or placed in a corner
- With a floor hearth or raised up the wall
- Ducting to other rooms
- Vertical or horizontal venting

WARNING:

Operation of this heater when not connected to a properly installed and maintained venting system can result in carbon monoxide (CO) poisoning and possible death.

Dimensions:

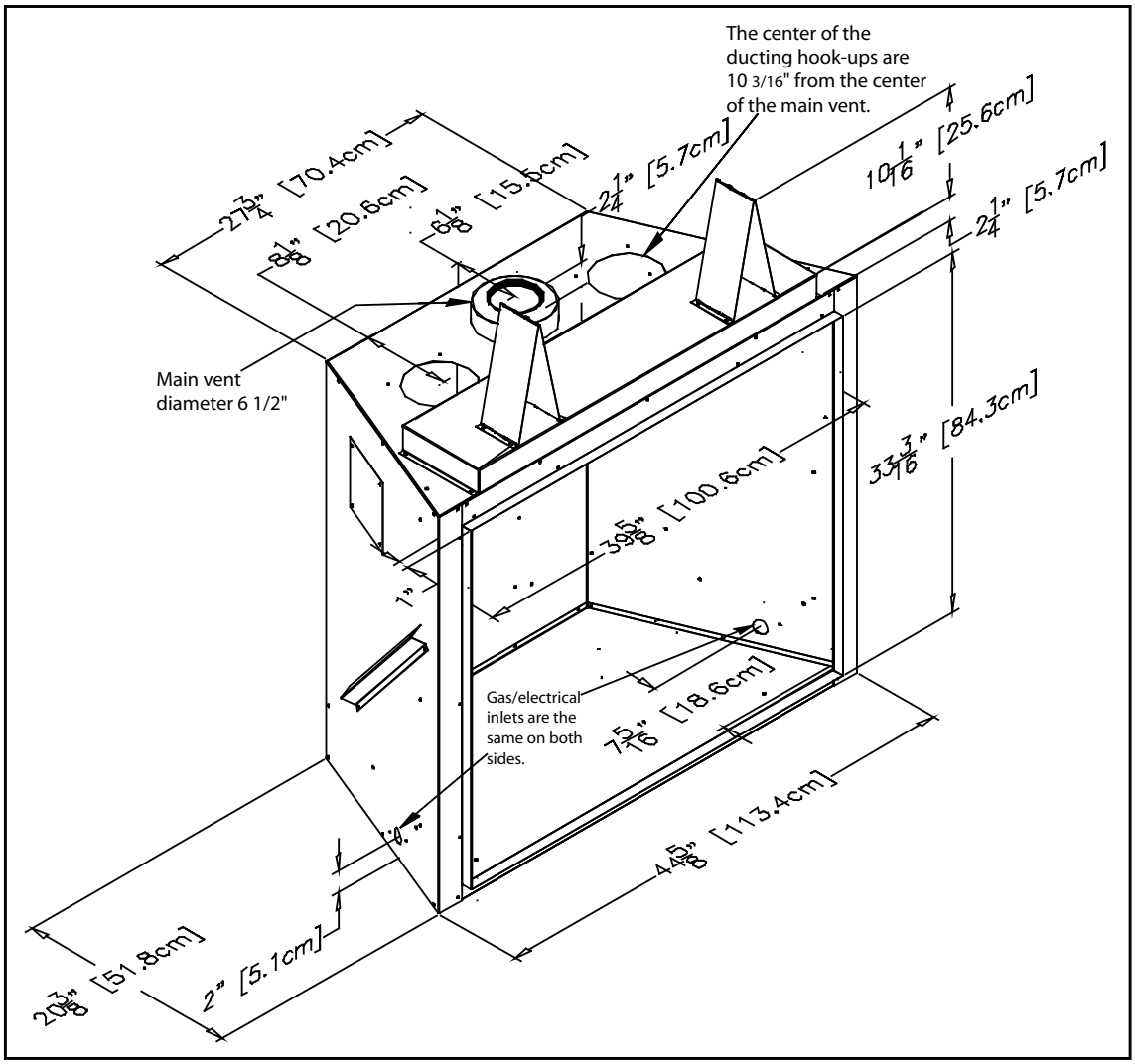

Figure 1. Dimensions of the Firebox (inches)

Rating Label Location:

The rating label is located under the control panel and is attached to a rectanglular metal sheet that is chained to the fireplace.

Operating Instructions

For Your Safety, Read Safety Precautions And Lighting Instructions Before Operating

WARNING: IF YOU DO NOT FOLLOW THESE INSTRUCTIONS EXACTLY A FIRE OR EXPLOSION MAY RESULT, CAUSING PROPERTY DAMAGE, PERSONAL INJURY OF LOSS OF LIFE.

Before lighting:

This appliance is equipped with a pilot, which must be lit by following these instructions exactly:

A) BEFORE LIGHTING, smell around the appliance area for gas. Smell next to the floor because some gas is heavier than air and will settle on the floor.

WHAT TO DO IF YOU SMELL GAS:

- Do not try to light any appliance
- Do not touch any electrical switch
- Do not use any phones in your building
- Immediately call your gas supplier from a neighbor's phone. Follow the gas supplier's instructions.
- If you cannot reach your gas supplier, call the fire department.

B) Use only your hand to push in or turn the gas control knob. Never use tools. If the knob will not push in or turn by hand, do not try to repair it. Force or attempted repair may result in a fire or explosion. Call a qualified service technician.

C) Do not use this appliance if any part has been under water. Immediately call a qualified service technician to inspect the appliance and to replace any part of the control system and any part of the gas system that has been under water.

Pilot Lighting Instructions:

The pilot light will remain on when the fireplace is in regular use, but when the fireplace is used only in certain seasons, the pilot may be extinguished during the off months. When the pilot is to be re-lit, the following steps MUST be followed.

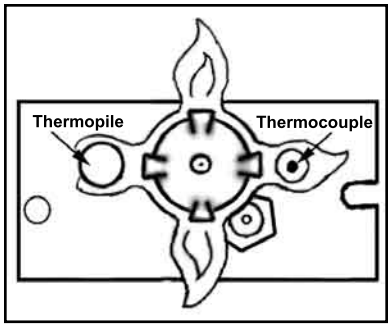

Figure 2. Pilot Flame

1. STOP! Read the safety information above.
2. Turn off all electrical power to the appliance.
3. Turn the gas control knob CLOCKWISE to the OFF position.
4. Remove the face and the glass. **Wait five (5) minutes to clear out any gas.** Replace the glass and face.

If you smell gas, including near the floor, STOP! Follow A) in the above safety information.
If you do not smell gas, continue to the next step.

5. Find the pilot in the back left side of the firebox.
6. Push in and turn the gas control knob COUNTER CLOCKWISE to PILOT.
7. Push the gas control knob in and hold. Press the piezo spark ignitor several times until the pilot lights. Keep knob depressed for about 30 seconds. If the pilot goes out, repeat steps 3 to 7.

If the pilot will not stay lit after several tries, or the knob does not pop back out when released, turn the gas shut off valve to OFF and call the service technician or gas supplier.

NOTE: Make sure the pilot light completely engulfs the thermocouple assembly (Figure 2).
Warning: The gas valve has a lockout device that prevents the pilot burner from being re-lit until the thermocouple has completely cooled.

Operating Instructions

For Your Safety, Read Safety Precautions And Lighting Instructions Before Operating

Burner lighting:

A) Make sure the pilot is lit.
B) Turn gas control knob COUNTER CLOCKWISE to ON.
C) Flip the burner switch to ON.
D) Turn HI/LO knob to the desired flame height.
E) Turn on all electrical power to the unit.

NOTE: Check that all burner holes are lit.

TO TURN GAS FIREPLACE OFF:

Flip switch to OFF to turn off burners only.



Figure 3. Control Panel

If the fireplace is to be turned off for the season, or for servicing, turn the gas shut off valve to OFF. DO NOT FORCE IT. If the unit is going to be serviced, turn off the electrical power to the unit as well.

NOTE: When the unit is turned on for the first time, it should be turned onto high, with the fan OFF, for the first two to four hours. This will cure the paint, logs, gasket material, and other products used in the manufacturing process. It is advised that a door or window be opened as the unit will start to smoke, which can irritate some people. After the unit has gone through the first burn, turn the unit OFF, including the pilot, and let the unit get completely cold. Then remove the glass and clean it with a good gas fireplace glass cleaner, available at your local Enviro dealer. See Glass Removal and Glass Cleaning section.

Remote controls:

This fireplace can use an optional remote control or an optional cordless wall thermostat. If either of these are to be used to control the fireplace for the majority of the time, leave the ON/OFF switch (on the control panel) in the remote/thermostat position. Consult the instructions included with the remote/wall thermostat for operation guidelines.

Air Diverter Control:

When the blower is on, the amount of air flow into the room can be ajusted with the air diverter. When the lever is to the far left, the room receives the air. When the lever is to the far right, the air goes out the duct. When the lever is in the middle, the air goes to both the duct and the room. The lever is found above the right end of the control panel (see figure 4).



Figure 4. Air Diverter

Blower speed:

The blower will come on only when the fireplace is up to temperature (approx 20 minutes). The speed of the fan can be changed by turning the fan control knob. To turn the blower off, turn the knob COUNTER CLOCKWISE until it "clicks" off (Figure 5).

It is advisable not to operate the blower below 1/3 speed as it puts a strain on the windings of the blower and running the blower at lower speeds could also cause premature fan failure.

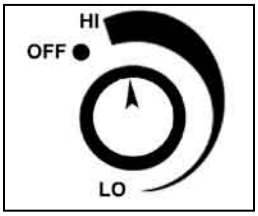

Figure 5. Fan Control

Maintenance And Service

Routine Maintenance:

Warning: Failure to position the parts in accordance with this manual, or failure to use only parts specifically approved with this appliance may result in property damage or personal injury.

At least once a year, run through the following procedures to ensure the system is clean and working properly. Check the burner to see if all the ports are clear and clean. Check the pilot to make sure it is not blocked by anything. The pilot flame should be blue with little or no yellow on the tips.

The venting system must be periodically examined; it is recommended the examination is done by a qualified agency.

CLEANING THE GLASS:

When the fireplace is cool, remove the face of the fireplace along with the glass. See Secondary Installation. Check the gasket material on the back of the glass, making sure that it is attached and intact.

During a cold start up, condensation will sometimes form on the glass. This is a normal condition with all fireplaces. However, this condensation can allow dust and lint to cling to the glass surface. Initial paint curing of the appliance can leave a slight film behind the glass, a temporary problem. The glass will need cleaning about two weeks after installation. **Use a mild glass cleaner and a soft cloth**. **Abrasive cleaners will damage the glass and plated surfaces.** Depending on the amount of use, the glass should require cleaning no more than two or three times a season. **Do not clean the glass when it is hot.**

CLEANING THE FIREBOX:

Remove the logs carefully, as they are very fragile. Gently remove all the embers and rock wool and place on a paper towel. Vacuum the bottom of the firebox thoroughly. Carefully clean any dust off the logs and remove any lint from the burner and pilot. At this time, inspect the burner pan for cracking or severe warping. If a problem is suspected, contact the dealer. Replace the logs and embers as in the Secondary Installation section.

REPLACING GLASS:

The glass in the fireplace is a high temperature ceramic. If the glass is damaged in any way, a factory replacement is required (see Parts List). Wear gloves when handling damaged glass door assembly to prevent personal injury. When the glass door assembly is being transported, it must be wrapped in newsprint and tape and/or a strong plastic bag. Do not operate with the glass front removed, cracked or broken. Removal and replacement of the glass from the door **must** be done by a licensed or qualified service person. **The glass must be purchased from an ENVIRO dealer. No substitute materials are allowed.**

CLEANING THE FACE:

Painted and porcelain faces should be wiped with a damp cloth periodically. If a plated face has been purchased, it is important to note that fingerprints and other marks can leave a permanent stain on plated finishes. To avoid this, give the face a quick wipe with denatured alcohol on a soft cloth BEFORE lighting the fireplace. Never clean the face unless it is cool. Do not use other cleaners as they may leave a residue, which can become permanently etched into the surface.

Maintenance And Service

Fuel Conversion:

Warning: A qualified service technician, in accordance with the manufacturer's instructions as well as all applicable authority having jurisdiction, shall install this conversion kit. If the information in these instructions is not followed exactly, a fire, explosion or CO poisoning may result. The qualified service agency is responsible for the proper installation of this kit. The installation is not proper or complete until the operation of the converted appliance is checked as specified in the owner's conversion kit.

Please read and follow these instructions. Also, please read the instruction guidelines provided by S.I.T. on how to remove and install the HI/LO regulator.

Step 1. Carefully inspect all parts supplied with this conversion kit.
Step 2. Shut the gas off at the shut-off valve.
Step 3. Remove the glass as shown in the Secondary Installation section.
Step 4. Change the regulator on the front of the gas valve (follow the instructions provided by S.I.T.).
Step 5. To change the pilot, simply pull the pilot hood straight up to access the pilot injector. Using a 5/32 inch Allen key, remove the pilot injector.
Step 6. Install the new pilot injector supplied with this conversion kit. Simply screw the new injector inside the pilot hood and reinstall the hood by placing the hood on the assembly, line up the key way, and snap into place.
Step 7. Remove the main burner orifice with a ½ inch deep socket.
Step 8. Install the new orifice supplied. Be sure to put a bead of pipe-thread sealant or approved Teflon tape on the orifice before installing into the burner assembly.
Step 9. Reinstall the burner tray, log set, embers, and glass.
Step 10. Open shut-off valve at the gas line to the unit.
Step 11. Re-light the fireplace to ensure proper operation and proper flame appearance.
Step 12. MAKE SURE that the sticker provided by S.I.T. is installed, to signify that the valve has been converted to a different fuel type. Also, make sure that the rating plate has a conversion label to show this unit has been converted to a different fuel type.

A VISUAL CHECK OF THE REGULATOR KNOB IS NECESSARY TO DETERMINE WHETHER OR NOT THE REGULATOR IS THE CORRECT PART. A 50% TURN DOWN REGULATOR WILL HAVE ONLY ONE CORNER ON THE KNOB

Conversion Kits should contain the following:

1 50% turn down HI/LO regulator with 3 T-20 Torx screws
1 Pilot injector
1 Main orifice
Conversion instructions
Labels to show conversion

	NATURAL GAS	PROPANE GAS
Pilot Orifice:	0.62mm	0.35mm
Burner Orifice:	#30 DMS	#47 DMS

Initial Installation

QUALIFIED INSTALLERS ONLY

Introduction:

This section of the owner's manual is for the use of qualified technicians only. Fireplace placement, hearths, facing, mantles, and venting terminations will be covered, as well as the gas and electric systems. There are several installation safety guidelines that must be adhered to. Please carefully read the safety precautions at the front of this manual.

Warning: Clearances must be sufficient to allow access for maintenance and service.

Placement:

The location for the fireplace can be along a wall, raised or at floor level, or in a corner. There are specific framing measurements for each situation. The basic opening should have the dimensions shown in Figure 6.

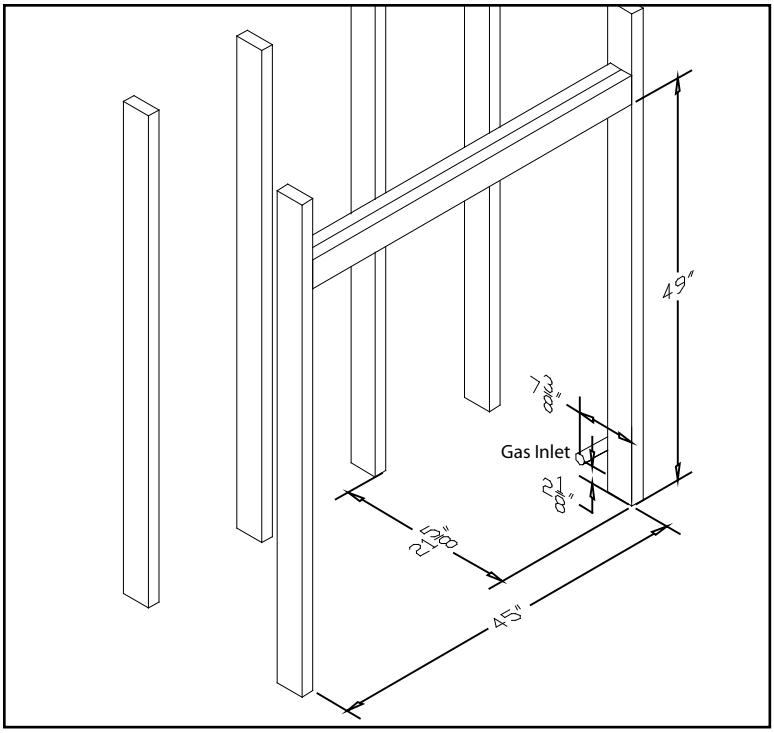

Figure 6. Dimensions for Framing the Firebox (inches)

Firebox framing:

Depth -	21⅝"	(54.9cm)
Width -	45"	(114.3cm)
Height -	49"	(124.5cm)
Gas/Electrical Inlet:		
Distance back -	7⅜"	(18.7cm)
Distance up -	2⅛"	(5.4cm)

The fireplace must have a strong and level surface to be placed on. The surface should be made of wood or a non-combustible material, not carpet.

The 21⅝ inches (54.9cm) dimension takes into account the 1 inch (2.5cm) rearstandoff on the back of the firebox. The framing boards may touch the standoffs, but **no insulating material can be placed between the frame and the standoffs.**

The gas line, 3/8 inch NPT, should be brought to the right side of the fireplace. If this set up is inconvenient, the electrical wire and the gas line configuration can be reversed.

The location should be chosen so the fireplace will be at least 36 inches (91.4cm) from drapes, doors and other combustibles. The framed opening should also be a minimum of 7 inches (17.8cm) from the nearest perpendicular wall (sidewall to the edge of the opening).

Initial Installation

QUALIFIED INSTALLERS ONLY

Corner Installation:

The dimensions for installing a fireplace in the corner of a room are given in Fig 7.

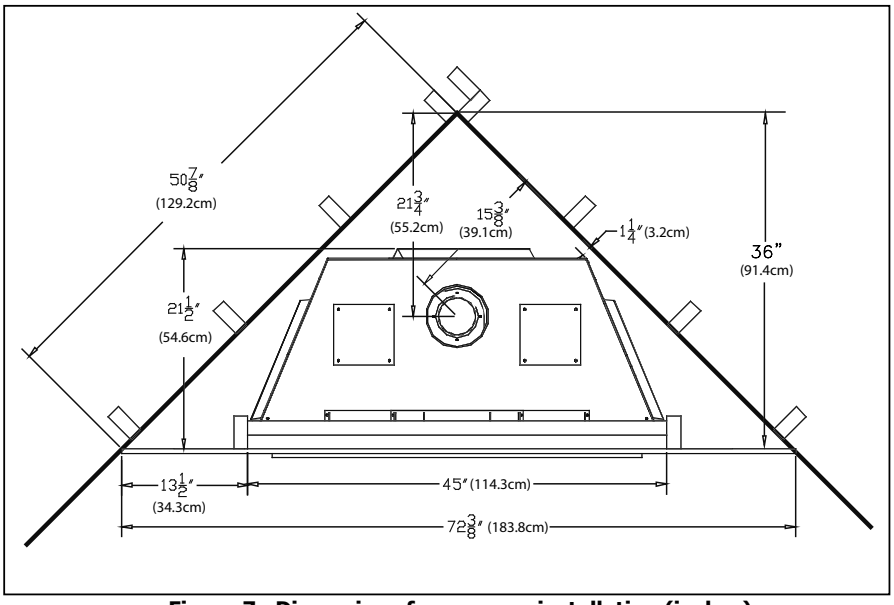

Figure 7. Dimensions for a corner installation (inches)

Raised Fireplaces and Hearths:

There are a few options with raised fireplaces: raised with no hearth, raised with a raised hearth, or raised with a floor level hearth. If the fireplace is 4 inches (10.1cm) or more above the floor, a hearth is not required. This measurement should be taken from the top of the flooring, i.e. the top of the carpet. The fireplace cannot be placed within 37 inches (1.04m) of the ceiling. When installing a raised fireplace, it is imperative that the support stand is strong enough to hold the weight of the fireplace and venting.

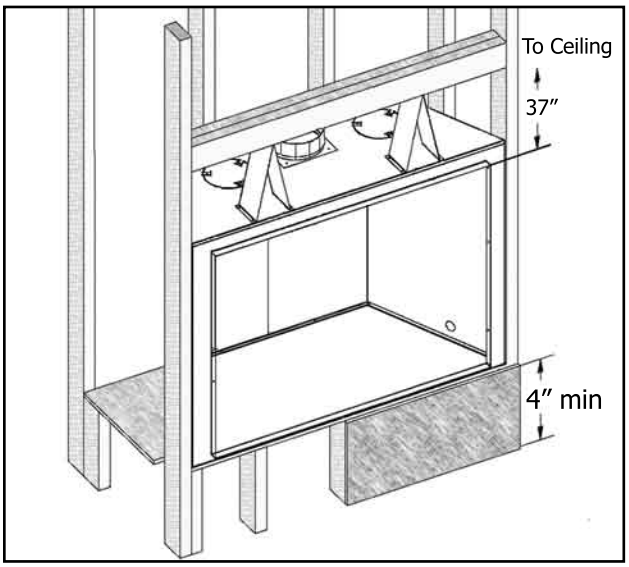

Figure 8. Raised Fireplace with no Hearth

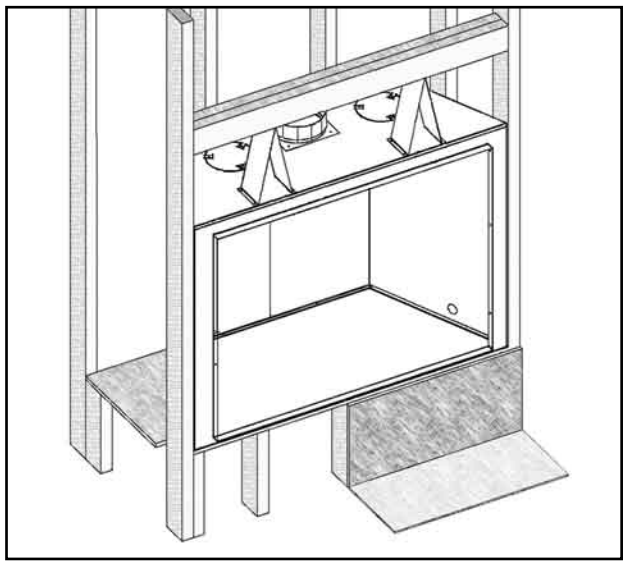

Figure 9. Raised Fireplace with Floor Level Hearth

Initial Installation

QUALIFIED INSTALLERS ONLY

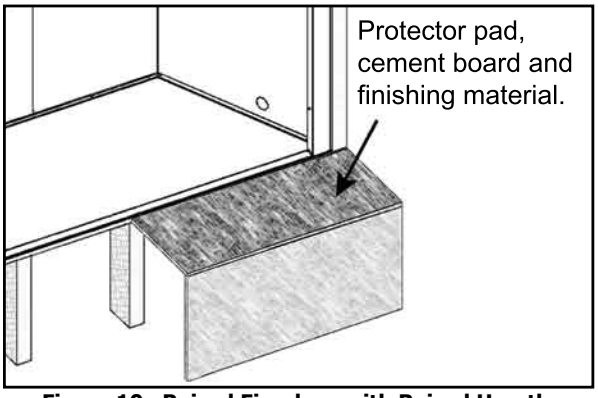

Figure 10. Raised Fireplace with Raised Hearth

If a hearth is to be installed, less than 4 inches below the unit, the protector pad (sheet metal provided with fireplace) must be placed directly on the floor or hearth framing, with cement board (see specs below) on top of it. Tile, or another non-combustible material forms the top layer of the hearth. A decorative trim may be added to the edge of the hearth. The trim can be made of combustible materials as long as the hearth extends at least **16 inches (40.6 cm)** in front of the fireplace and **1 inch (2.5 cm)** on either side of the fireplace opening. To install the face, it is necessary for the bottom flange of the fireplace opening to overlap or be flush with the tile. If the total thickness of the protector pad, cement board, and finished tile is more than 1 inch (2.5cm) the fireplace must be raised to accommodate additional thickness.

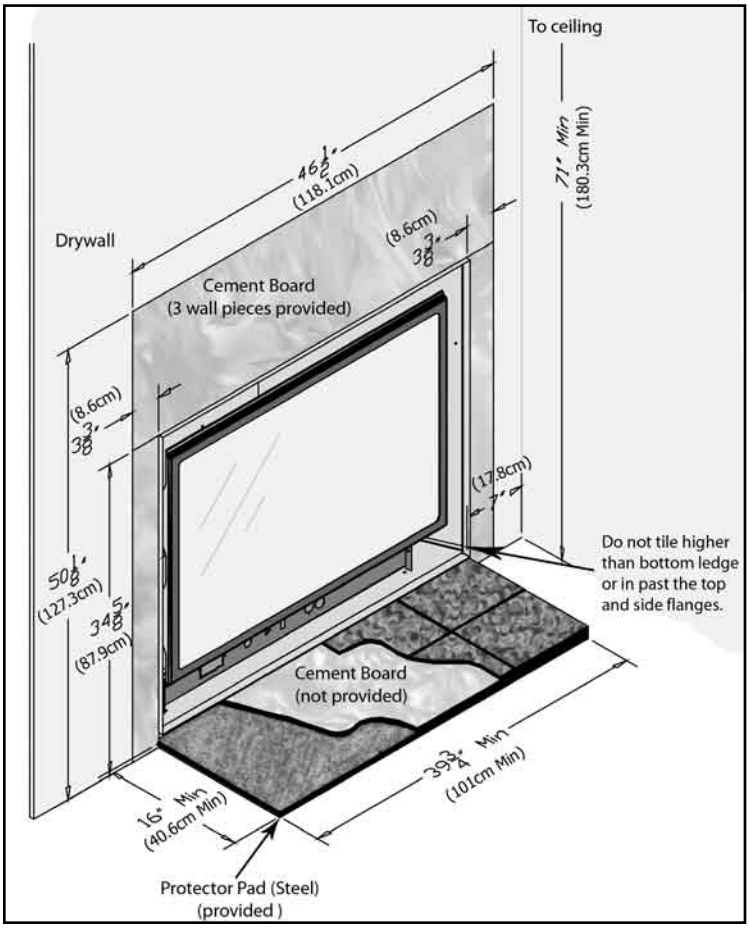

Figure 11. Floor Level Hearth Requirements With Dimensions Around Opening.

Fireplace Surround:

CEMENT BOARD: The cement board can be fastened to the front of the unit with self-drilling metal screws. It is safe to screw to the outer border of the fireplace. Cement board for the hearth can be purchased at a local building material store. The board must have a k-value of 7.69 Btu/(ft^2 × h × °F) [13 W/m × K] and a R-value of 0.13 ft^2 × h × °F/Btu [0.023 m^2 × K/W] or better.

TILED FINISH: Because of the amount of heat exuded by the fireplace, drywall cannot come directly up to the fireplace. Figure 11 shows the minimum dimensions for the cement board. Tile or other non-combustible materials cover the cement board, but do not overlap into the fireplace opening. The total depth of the cement board and the finishing materials should be a minimum of 1 inch to maximum of 1 ⅜ inches (3.5cm). The fireplace front will be installed over top of the finishing material.

SMOOTH FINISH: The fireplace will have to be recessed by ½ inch (12mm) and two layers of cement board must be used if the area around the fireplace will be finished flush with the rest of the wall.

ROCK OR BRICK FINISH: If the face of the fireplace is to be recessed, the face option chosen will determine the size and shape of the surrounding material (i.e. brickwork). Since the dimensions provided on the face option instruction sheet are only approximations, it is recommended that the steel template of the chosen face is used. See Parts List for the face template part number.

Initial Installation

QUALIFIED INSTALLERS ONLY

Mantle Clearances:

It is not necessary to install a mantle, but if one is desired it is important to follow the guidelines.

Top of unit to horizontal framing:

14 7/16" (36.7cm)

Top of flange to top of cement board:

15 ½" (39.4cm)

Top of flange to bottom of 3½" mantle:

24 ½" (62.2cm)

Top of flange to bottom of 8" mantle:

27 ½" (69.9cm)

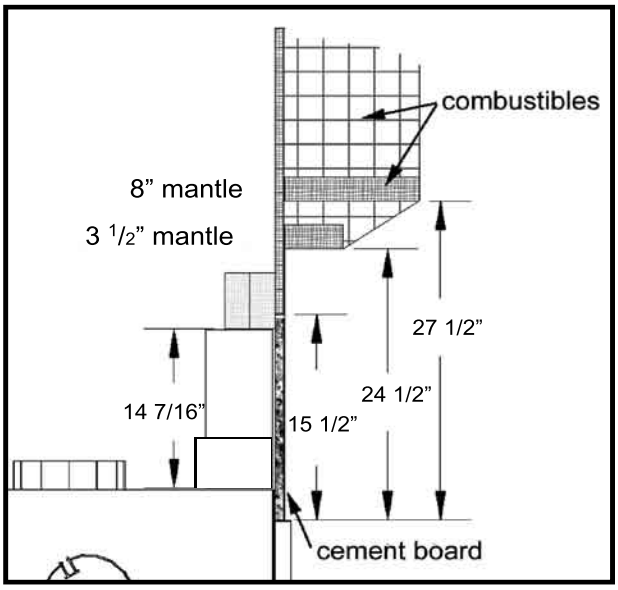

Figure 12. Combustible Mantle Clearances (Inches)

Vent Parts and Terminal Clearances:

SIMPSON DURAVENT (SD) and METALBESTOS (M), must state if galvanized or black wanted, PART NUMBERS:

SD	M	Description	SD	M	Description
908	1604006	6" pipe length	943S		Flashing, 7/12 to 12/12 roof pitch
907	1604009	9" pipe length	953	1604810	Storm collar
906	1604012	12" pipe length	963	1604500	Fire stop
904	1604024	24" pipe length	988	1604430	Wall support
903	1604036	36" pipe length	984		Horizontal square termination
902	1604048	48" pipe length	971	1604621	Horizontal termination kit A
911		11" to 14 5/8" pipe, adjustable, black	980		Vertical termination
	1604082	4"-10" pipe , adjustable	991	1604802	High wind vertical termination
945	1604215	45° elbow, black	985	1604804	High wind horizontal termination
990	1604230	90° elbow, black		1604808	Vinyl siding shield plate
	1604825	Flashing, 0/12 to 6/12 roof pitch	950	1604806	Vinyl siding standoff
	1604830	Flashing, 6/12 to 12/12 roof pitch	942	1604460	Wall thimble
943		Flashing, 0/12 to 7/12 roof pitch			

The Sherwood Home Collection of fireplaces have been tested and certified for use with SIMPSON DURAVENT TYPE GS PIPE FOR GAS STOVES. SECURITY CHIMNEY'S "SECURE VENT DIRECT VENT SYSTEM" and SELKIRK "METALBESTOS MDV VENT SYSTEM" kits are available for horizontal venting. When using Simpson Duravent, it is recommended that, before installation, a bead of RTV High Temperature Silicone should be applied to each outer vent joint, and Mil-Pac to each inner joint. When planning an installation, it will be necessary to select the proper length of vent pipe for the particular requirements.

Initial Installation

QUALIFIED INSTALLERS ONLY

Vent Termination Restrictions:

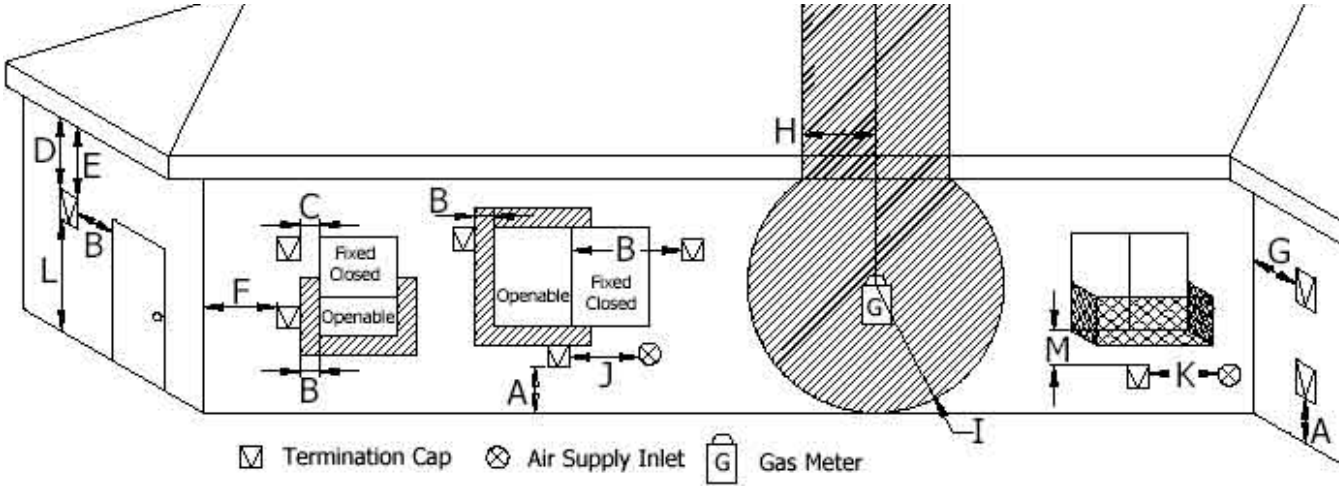

Figure 13. Vent Termination Restrictions

Letter	Canadian Installation [1]	US Installation[2]	Description
A	12in (30cm)		Clearance above grade, verandah, porch, deck, or balcony.
B	12in (30cm)	9in (23cm)	Clearance from window or door that may be opened.
C	12in (30cm)*		Clearance from permanently closed window (to prevent condensation).
D	24in (60cm)*		Vertical clearance to ventilated soffit located above the terminal, within a horizontal distance of 2 ft (60cm) from center line of terminal.
E	18in (45cm)*		Clearance to unventilated soffit.
F	12in (30cm)*		Clearance to outside corner.
G	12in (30cm)*		Clearance to inside corner.
H	3ft (91cm) within a height of 15ft (4.5m) above the meter/ regulator assembly	3ft (91cm) within a height of 15ft (4.5m) above the meter/ regulator assembly*	Clearance to each side of center line extended above meter/regulator assembly.
I	3ft (91cm)	3ft (91cm)*	Radial clearance around service regulator vent outlet.
J	12in (30cm)	9in (23cm)	Clearance to non-mechanical air supply inlet to building, or the combustion air inlet to any other appliance.
K	6ft (1.83m)	3ft (91cm) above if within 10ft (3m) horizontally	Clearance to mechanical air supply inlet.
L	7ft (2.13m)[t]	7ft (2.13m)*[t]	Clearance above paved sidewalk or paved driveway located on public property.
M	12in / 30cm[+]	12in / 30cm*[+]	Clearance under verandah, porch, deck, or balcony.

[1] In accordance with the current CSA B149, Natural Gas and Propane Installation Code.
[2] In accordance with the current ANSI Z223.1 NFPA 54, National Fuel Gas Code.
* These numbers are only estimates. Clearance in accordance with installation codes and the requirements of the gas supplier.
[t] A vent shall not terminate directly above a side walk or paved driveway that is located between two single family dwellings and it serves both dwellings.
[+] Permitted only if verandah, porch, deck, or balcony is fully open on a minimum of two sides beneath the floor.

NOTE: Venting terminals shall not be recessed into walls or siding.

Initial Installation

QUALIFIED INSTALLERS ONLY

VENTING:

This fireplace has been tested and certified for use with SIMPSON DURAVENT TYPE GS PIPE FOR GAS STOVES, SECURITY CHIMNEY'S "SECURE VENT DIRECT VENT SYSTEM" and SELKIRK "METALBESTOS MDV VENT SYSTEM"

A 1 inch (2.5cm) clearance to combustibles must be maintained around any vertical vent pipe. Around a horizontal vent pipe, the clearance to combustibles should be 2 inches (5cm) above and 1 1/2 inches (4cm) on the sides and bottom. When combustible materials are directly above a 90° elbow, 5 inches (12.7cm) of clearance are necessary. A 10 inches (25cm) x 10 inches (25cm) frame will assure the proper support and spacing for the vent pipe as it passes through the wall. Installations in Canada require that a wall thimble be used for passing through walls and ceilings. See Figure 15. All sealing and vapour barriers must comply with local building codes.

When planning an installation, it is necessary to select the proper length of vent pipe for the particular requirements. The configuration of the venting pipes depends on the locations of walls, ceilings and studs. However, the pipes cannot be of arbitrary length and arrangement. Because the length of the vertical and horizontal sections dramatically affects the burning efficiency of the fireplace, certain guidelines have been set in the Vent Configurations section.

Venting terminals cannot be recessed into a wall or siding.

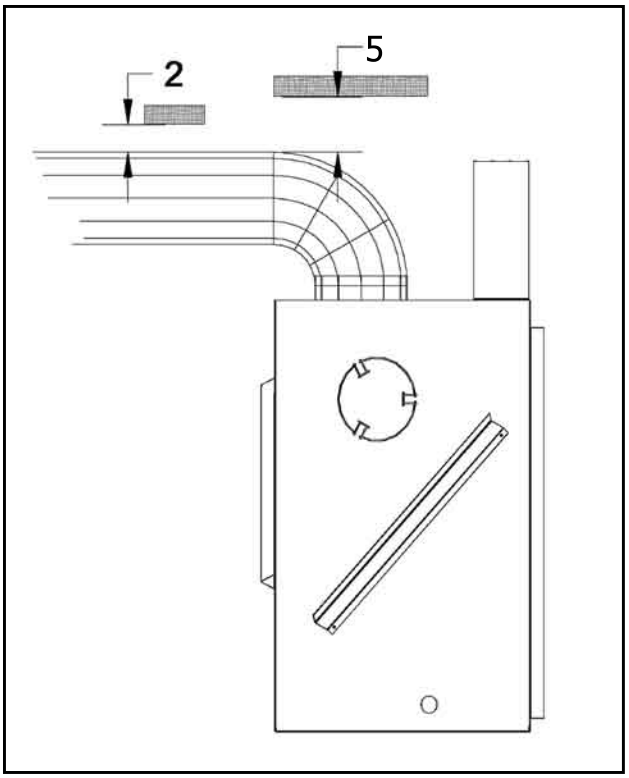

Figure 14. Vent Pipe Clearances (inches)

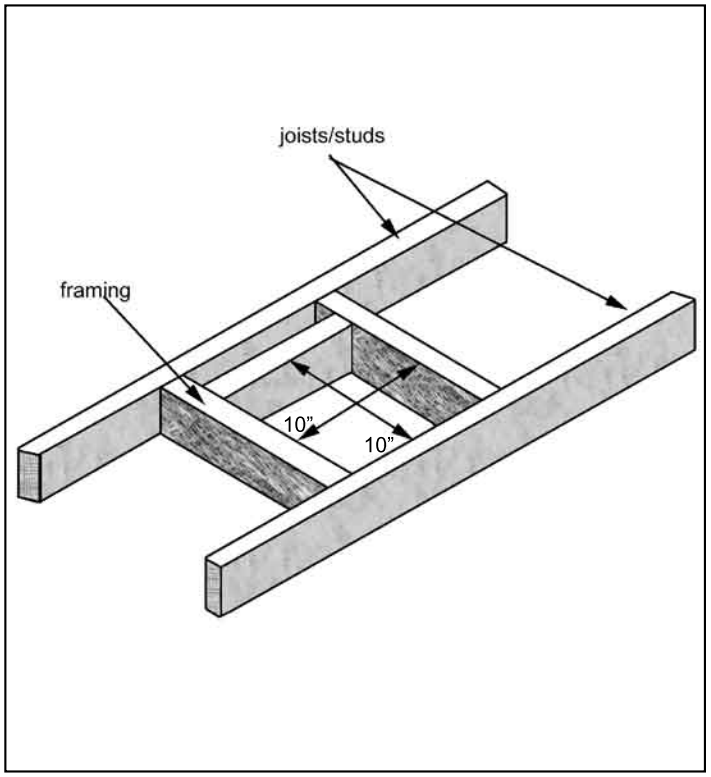

Figure 15. Vent Framing Through Wall/Ceiling

Initial Installation

QUALIFIED INSTALLERS ONLY

Vent Configurations and Restrictor Settings:

Figure 16 shows the range of venting options. Any layout that remains within the shaded area of Figure 16 is acceptable. Having the fewest number of elbows is ideal, as they tend to disrupt air movement. Using 45° elbows is preferable to using 90° elbows. Also, a shorter vent system will perform better than a longer one.

The vent restrictor controls the amount of air moving through the vent pipe. Longer vertical vent lengths necessitate greater restraint. Figure 16 shows the vent restrictor settings required, relative to the length of vent pipe. The vent restrictor is located on the right side of the fireplace, above the glass. Figure 17 shows the vent restrictor handle and the holes that indicate the different levels. To avoid injury, it is best to make this adjustment when the fireplace is cool or use welder's gloves or oven mitts.

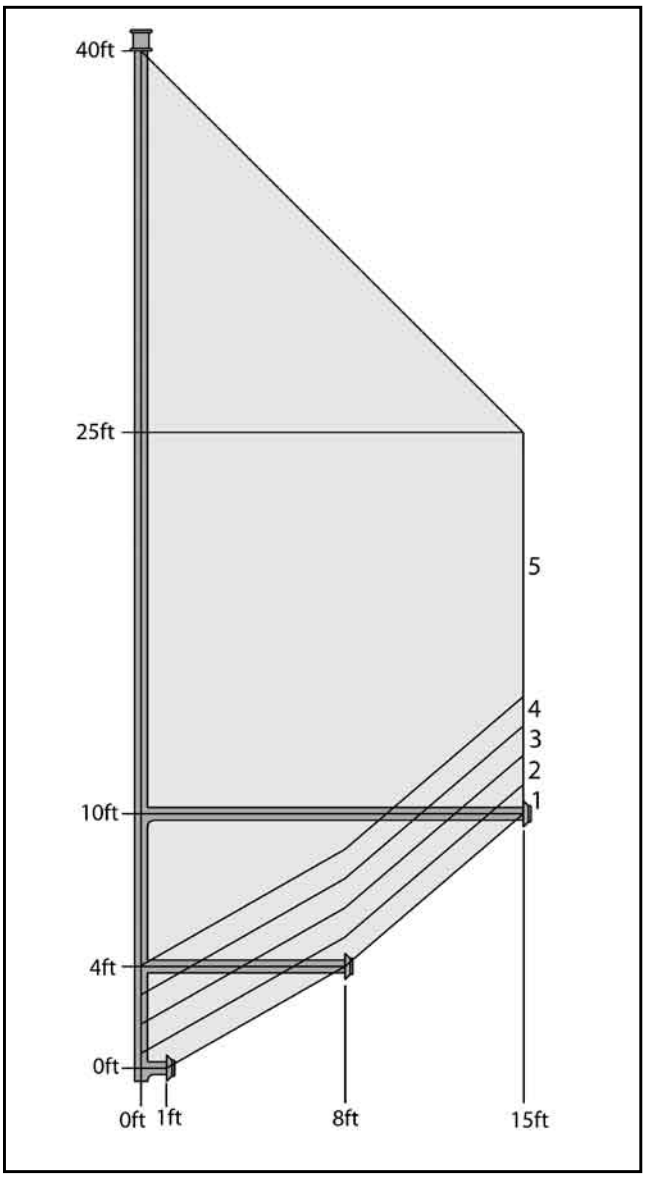

Figure 16. Possible Vent Configurations

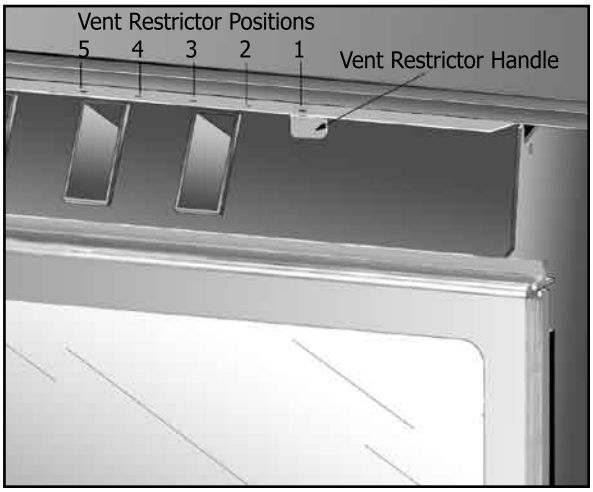

Figure 17. Possible Vent Restrictor Positions

Note: 0,0 in Figure 16 represents a 90° bend directly off the top of the unit in all horizontal instances **except** when using Selkirk and having less than a 4 ft (1.22m) rise and 8 ft (2.44m) horizontal offset. In this case, a 1 ft rise must be added below the 90° bend.

Initial Installation

QUALIFIED INSTALLERS ONLY

Horizontal Termination:

NOTES:

1. Horizontal pipes must not be level. For every 12 inches (30.5cm) of horizontal travel (away from the stove), there should be at least 1/4 inch (6.4mm) of vertical travel. Never allow the vent to run downward, as this could cause high temperatures or even present the possibility of a fire.

2. The exterior of the horizontal vent termination must not be blocked or obstructed.

3. If the vent termination is not being attached to wood, the four wood screws provided should be replaced with material appropriate fasteners.

4. For buildings with vinyl siding, a vinyl standoff should be installed between the vent cap and the exterior wall. Attach the vinyl siding standoff to the horizontal termination. Note that the termination bolts onto the flat portion of the standoff, providing an air space between the wall and the vent termination. The air gap prevents excessive heat from possibly melting the vinyl siding.

5. Horizontal pipes must be supported every 3ft (91.4cm). Plumber's all round strap will suffice.

6. When running horizontal pipe, clearances to combustibles must be maintained 1½ inches (3.8cm) sides, 1½ inches (3.8cm) bottom, and 2 inches (5.1cm) top.

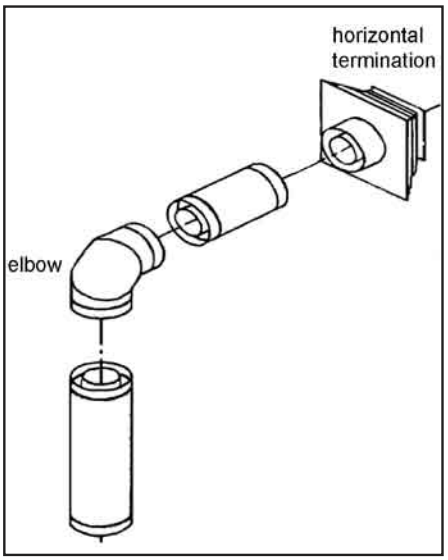

Figure 18. Horizontal Vent Termination

Step 1. Set the fireplace in the desired location. Check to determine if wall studs will be in the way when the venting system is attached. If this is the case, the location of the fireplace may have to be adjusted or the venting may have to be offset.

Step 2. Direct vent pipe sections are designed with special twist-lock connections. Dry fit the desired combination of pipe and elbows to the appliance adaptor.

Step 3. With the pipe in the correct position and attached to the fireplace, mark the wall for a 10 inches (25.4cm) x 10 inches (25.4cm) square hole (see Figure 15). The center of the hole should match the center line of the horizontal pipe. Cut and frame the hole in the exterior wall where the vent will be terminated. If the wall being penetrated is made of a non-combustible material (i.e. masonry or concrete), a 7 inches (17.8cm) hole is acceptable.

NOTE: For Simpson Duravent only, place a bead of Mil-Pac on the outer edge of the inner exhaust pipe (non-flared end). Push the pipe sections together, then twist about ¼ turn, making sure the two sections are fully locked. Wrap all seams with foil ducting tape.

Step 4. With the hole now framed, the wall thimble installed, and the pipe extending into the wall, proceed to the outside. Attach the termination to the pipe using RTV and MilPac to seal joints. The vent pipe must extend into the vent cap at least 1¼ inches (3.2cm). Secure the connection between the vent cap and the pipe by attaching the two sheet metal straps, which extend from the vent cap assembly to the outerwall of the vent pipe. Bend any remaining portion of the strap back towards the vent cap. Security Secure Vent uses a twist lock cap.

Step 5. Position the horizontal vent termination in the center of the 10 inches (25.4cm) square hole and attach to the exterior wall with the four screws provided. The arrow on the vent termination should be pointing up. Run a bead of non-hardening mastic around the edges of the vent cap, to make a seal with the wall. Ensure the proper clearances to combustibles have been maintained.

QUALIFIED INSTALLERS ONLY

VERTICAL TERMINATION:

NOTES:

1. If an offset is necessary to avoid obstructions in the attic, the vent pipe must be supported every 3ft (91.4cm) (see Figure 19).

2. Whenever possible, use two 45° elbows rather than two 90° elbows, as the 90° elbows tend to restrict the flow of flue gases.

3. For multi-story installations, a ceiling fire stop is required at the second floor and any subsequent floors. The opening should be a framed 10 inches (25.4cm) x 10 inches (25.4cm) hole.

4. Any areas above the first floor, including closets and storage spaces which the vent passes through, must be enclosed. The enclosure can be framed and sheet rocked with standard building materials. All minimum clearances must be maintained. Do not fill any of the required air spaces with insulation.

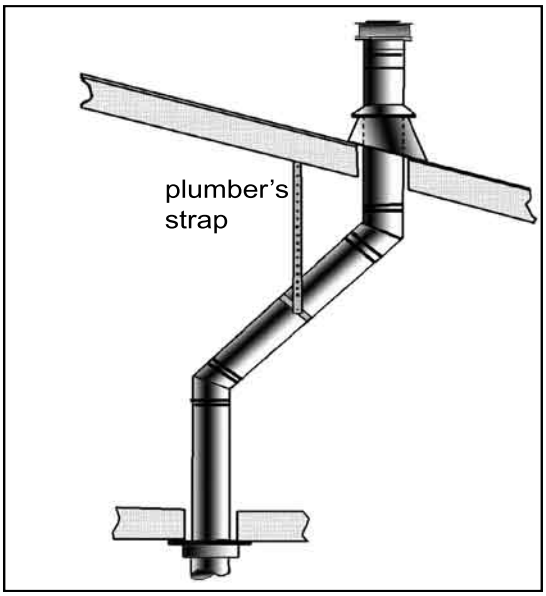

Figure 19. Pipe Support

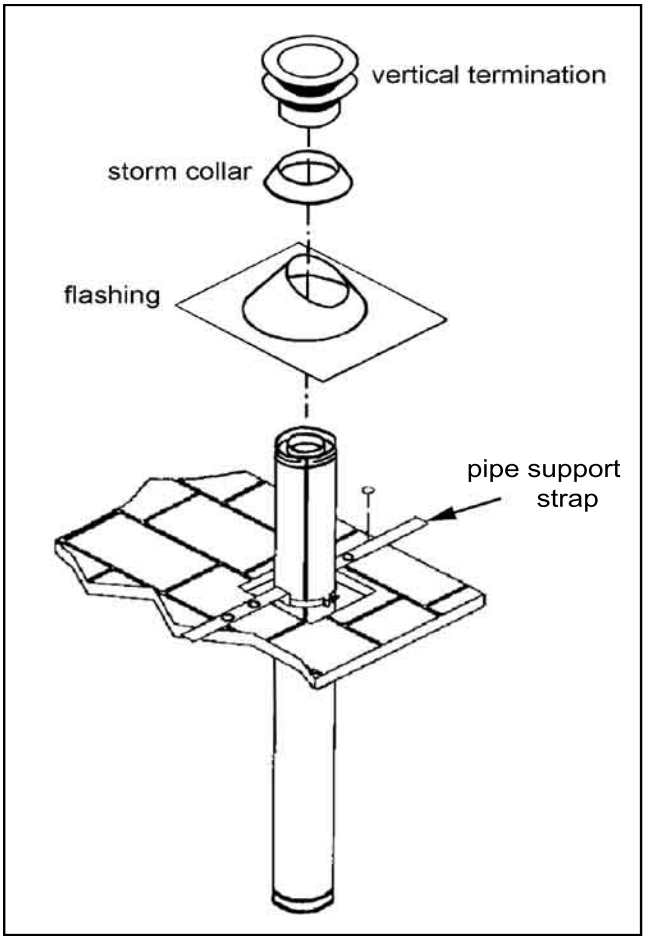

Figure 20. Vertical Vent Termination

Step 1. Check required clearances to combustibles when passing through ceilings, walls, roofs, enclosure attic rafters. See end of this section. Do not pack air spaces with insulation.

Step 2. Set the fireplace in the desired location. Drop a plumb bob down from the ceiling to the flue exit. Mark the location where the vent will penetrate the ceiling and drill a small hole at this point. Next, drop a plumb bob from the roof to the hole drilled in the ceiling. Mark the spot where the vent will pass through the roof. Determine if the ceiling joists, rafters or other framing members will obstruct the venting system. The fireplace may need to be relocated to avoid cutting any load-bearing members or an offset elbow can be used.

Step 3. To install the wall thimble in a **flat ceiling**, cut a 10 inches (25.4cm) x 10 inches (25.4cm) square hole in the ceiling. The previously drilled hole should be at the center of the new hole. The square hole should be framed. See Figure 15. For other roof pitches see Table 1.

Step 4. Assemble the desired lengths of pipe and elbows necessary to reach through the square hole from the fireplace adaptor. Ensure all the pipe and elbow connections are fully twisted and locked together.

QUALIFIED INSTALLERS ONLY

Step 5. Once the pipe sections have been joined and run up through the roof, slip a pipe support strap over the exposed sections. Bend the support straps outwards and push the pipe support strap down to the roof level. Use a level to make sure the pipe is vertical and tighten the clamp around the pipe section. With roofing nails, secure the support straps to the roof and seal the nail heads with non-hardening mastic. Trim the excess length of the straps. If the installation is taking place in a finished house, the pipe support straps can be attached to the rafters in the attic. See Figures 19 and 20.

Step 6. Slip the flashing over the pipe section protruding from the roof and secure the base of the flashing with roofing nails. Use a non-hardening sealant on the nail holes and the edges of the flashing. On a sloped roof, make sure the shingles overlap the top edge of the flashing.

Step 7. Continue to add pipe sections until the height of the vent cap meets the minimum code requirements (see Table 1). In high winds, nearby trees, adjoining roof lines, steep roof pitches, and other similar factors can result in poor draft or down-drafting. In these cases, increasing the vent height may solve the problem.

Step 8. Slip the storm collar over the pipe and push it down to the top of the flashing. Use the non-hardening sealant around the joint between the pipe and the storm collar.

Step 9. Twist on the vent cap until it locks.

Table 1. Minimum Distance Associated with Roof Pitch

ROOF PITCH	MIN DISTANCE	
	ft	m
flat to 7/12	1	0.3
>7/12 to 8/12	1.5	0.46
>8/12 to 9/12	2	0.61
>9/12 to 10/12	2.5	0.76
>10/12 to 11/12	3.25	0.99
>11/12 to 12/12	4	1.22
>12/12 to 14/12	5	1.52
>14/12 to 16/12	6	1.83
>16/12 to 18/12	7	2.13
>18/12 to 20/12	7.5	2.29
>20/12 to 21/12	8	2.44

Initial Installation

QUALIFIED INSTALLERS ONLY

Ducting:

The option of ducting allows heat from the fireplace to be transferred to a different area. The maximum total length for the ducting is 20ft (610cm). There are four duct outlets that can be used. However, the blower puts out 200cfm no matter how many ducts are used. Therefore, the more ducts there are, the less air goes through each one. A short, straight duct maximizes its' heating ability as air in the ducts is restricted by the length and number of bends in the pipe.

For the **first 24 inches (61cm) of ducting, 1/2 inch (1.3cm) of clearance is required.** After 24 inches (61cm), the duct can be run with 0in clearance, though 1/2 inch (1.3cm) is preferred. To avoid heat loss, insulate the duct whenever it passes through an unheated area (i.e. crawl space). Insulating the ducts elsewhere helps the efficiency of the ducting system.

Standard galvanized ducting and heat registers are to be used. Simply remove the desired cover plate from the outside of the firebox and attach a 6 inches (15.2cm) starter ring. Make sure to foil-tape all seams to prevent leaking.

Ensure all ducting meets local building codes.

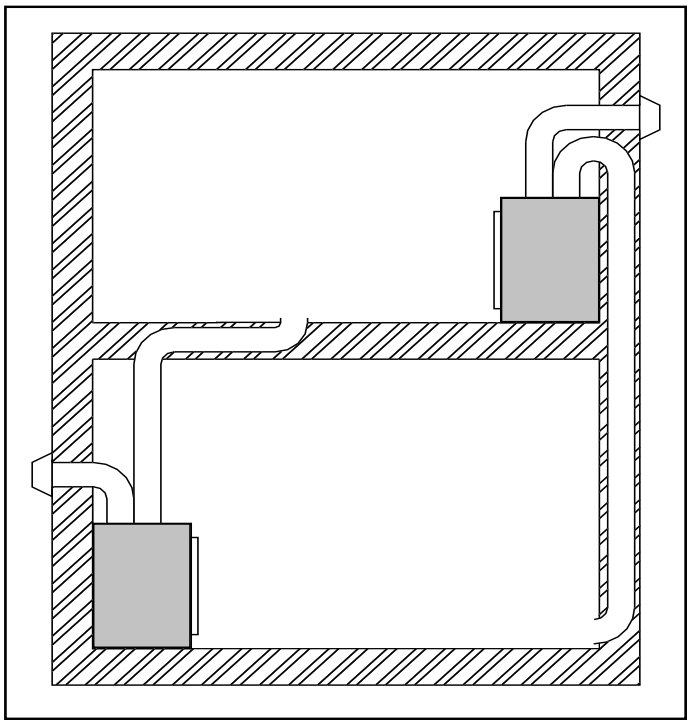

Figure 21. Ducting Options: ducted from upper floor to lower floor & from lower floor to upper floor.

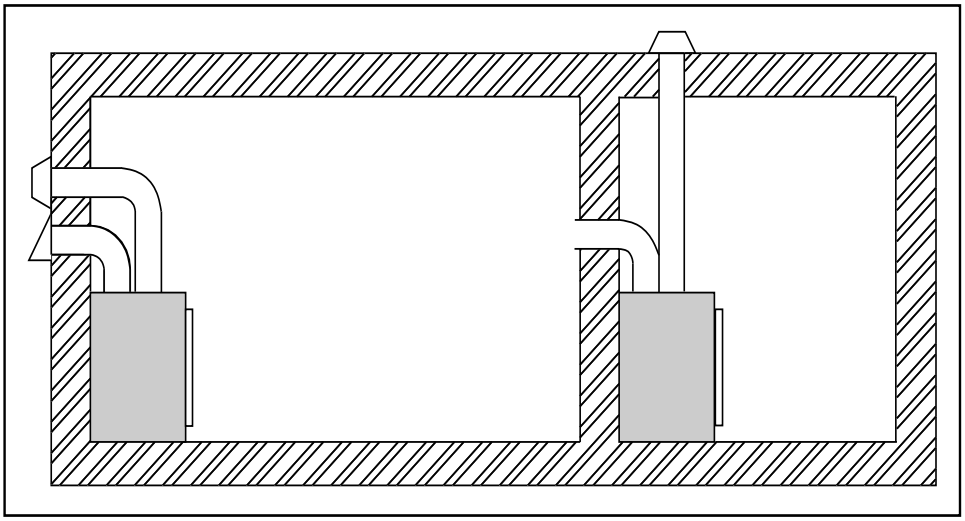

Figure 22. More Ducting Options; ducted to outside & to another room on an interior wall.

Initial Installation

QUALIFIED INSTALLERS ONLY

Electrical System:

The fireplace must be electrically connected and grounded in accordance with local codes or, in the absence of local codes, with the current CSA C22.1 CANADIAN ELECTRICAL CODE Part 1, SAFETY STANDARDS FOR ELECTRICAL INSTALLATIONS, OR THE NATIONAL ELECTRICAL CODE ANSI / NFPA 70 in the US.

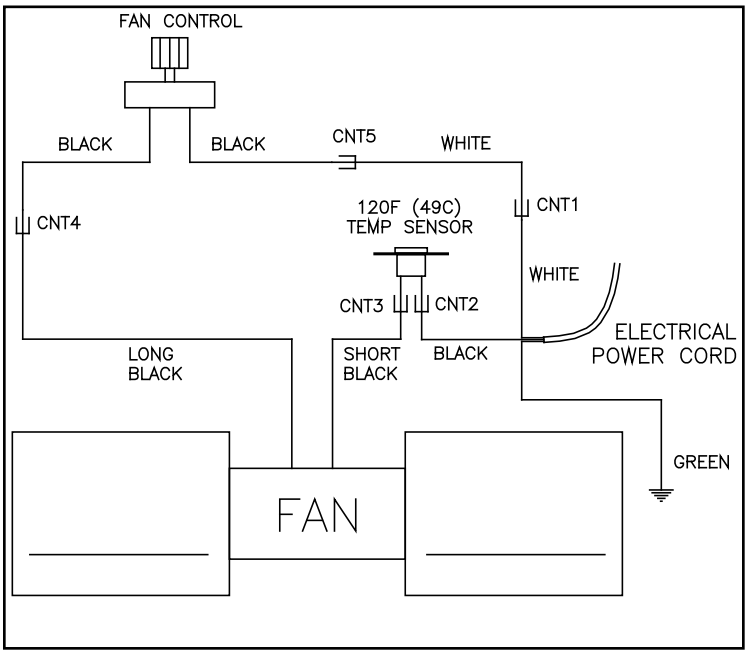

Figure 23. Wiring Diagram For Fan Control.

WARNING: The electrical grounding instructions must be followed. This appliance is equipped with a three-prong (grounding) plug for your protection against shock hazard, and should be plugged directly into a properly grounded three-prong outlet. DO NOT cut or remove the grounding prong from this plug.

CAUTION: When servicing controls, label all wires prior to disconnection. Wiring errors can cause improper and dangerous operation. Verify proper operation after servicing.

Recommended Thermostat Wire Size:

Wire Size	Max. Length
14 ga.	100 ft (30.48m)
16 ga.	60 ft (18.29m)
18 ga.	40 ft (12.00m)
20 ga.	25 ft (7.62m)
22 ga.	18 ft (5.49m)

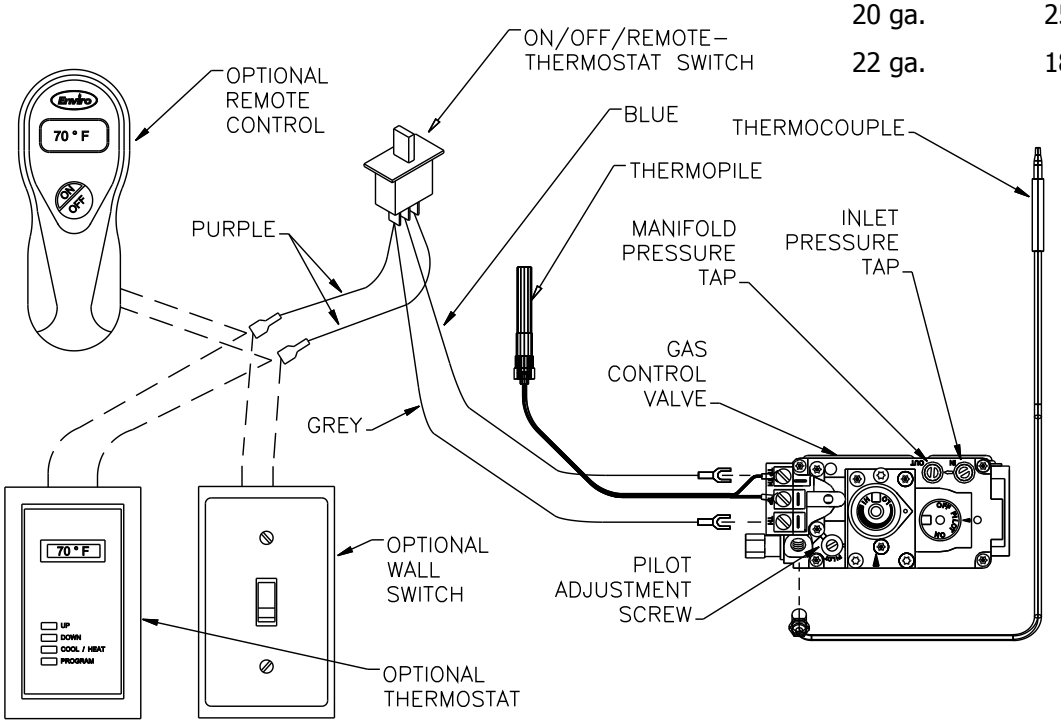

Figure 24. Wiring Diagram For Gas Valve.

Initial Installation

QUALIFIED INSTALLERS ONLY

Gas Line Connection:

Warning: Only persons licensed to work with gas piping may make the necessary gas connections to this appliance.

Gas Line Connection:

• This fireplace is equipped with a certified flexible pipe located on the right side of the unit, terminating in a 3/8 inch male NPT fitting. Consult the local authorities for local codes or use the CAN/CGA B149 (1 or 2) installation code in Canada. In the US, gas installations follow either local codes or the current edition of the National Fuel Gas Code ANSI Z223.1.

• The efficiency of this unit is a product thermal efficiency rating determined under continuous operating conditions and was determined independently of any installed system.

The appliance and its' shut-off valves must be disconnected from the gas supply piping system during any pressure testing where the pressure **exceeds** 1/2 psig (3.45kPa) or the valve will be damaged.

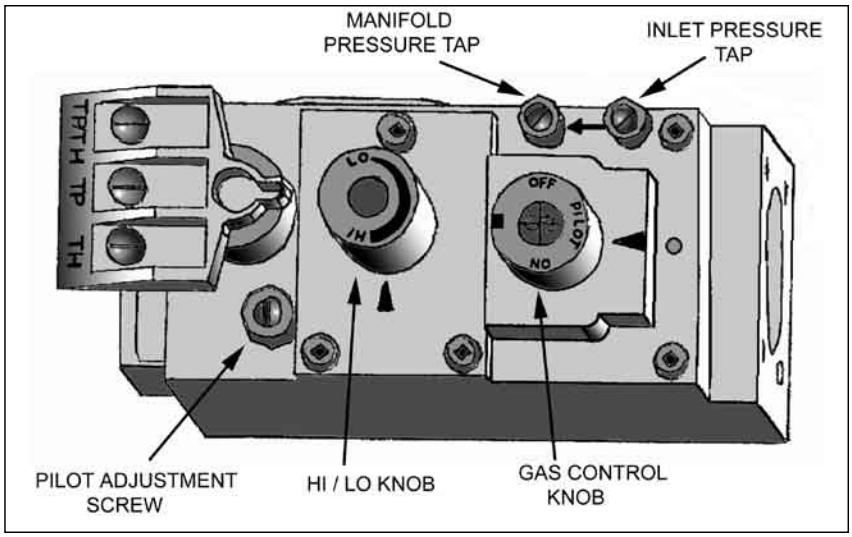

Figure 25. Gas Control Assembly

The unit must be isolated from the gas supply piping system by closing its' individual manual shut off valve during any pressure testing of the gas supply piping system at pressures **equal to or less than** 1/2psig (3.45 kPa)

Always check for gas leaks with a soap and water solution after completing the required pressure test.

TO TEST VALVE PRESSURES:

The pressure taps are located on the top right of the valve. Figure 25.

• Turn set screw 1 turn counterclockwise to loosen.
• Place 5/16 inch (8mm) I.D. hose over the pressure taps.
• Check pressures using a manometer.
• When finished, release pressure, remove hose and tighten set screw.

Main Burner	Natural Gas (in wc/kPa)	Propane Gas (in wc/kPa)
Orifice:	#30 DMS	#47 DMS
Manifold Press:	3.8 / 0.95	11.0 / 2.74
Min. Manifold Press:	1.1 / 0.27	2.7 / 0.67
Max. Supply Press:	7.0 / 1.74	13.0 / 3.28
Min. Supply Press:	5.0 / 1.24	12.0 / 2.98
Max. BTU Input:	50,000/14.65kWh	46,650/13.67kWh
Min. BTU Input:	27,000/ 7.91kWh	23,750/ 6.96kWh

Table 2: Gas Rating

NEVER USE AN OPEN FLAME FOR LEAK TESTING.

Secondary Installation

Glass Removal:

In order to install the log set, and for regular cleaning, the glass door must be removed. With the face off, there are two handles on each side of the glass. They rotate 90° until parallel with the floor. The top of the glass will move away from the firebox and then the glass door can be lifted off the resting points.

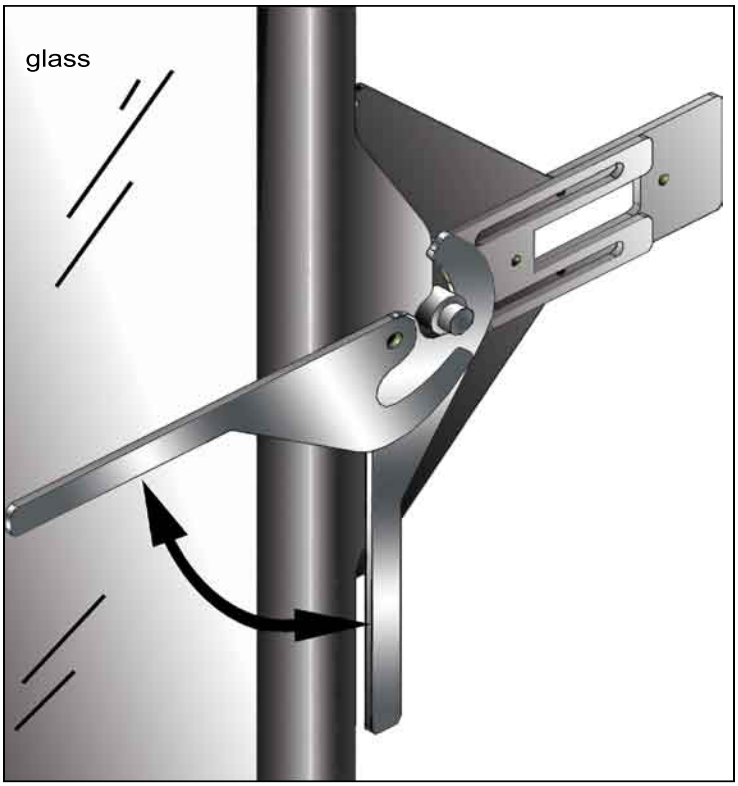

Figure 26. Glass Removal Handle

To replace the glass door, simply reverse the above procedure.

Warning: Do not touch or attempt to remove the glass if the fireplace is not completely cold.

WARNING: Never operate the fireplace with the glass removed.

Log Set and Ember Installation:

The placement of the logs is not arbitrary. If they are positioned incorrectly, the flames can be "pinched" and will not burn correctly. The burner (shown in Figure 27), and a few of the logs come with locator pins, notches and ledges, which make alignment easier. Using the pictures provided, carefully set the logs in place (see Figures 28 through 33).

NOTE: The logs are fragile and should be handled gently

Once the logs are in place the embers can be placed onto and around the burner to create a realistic look. Bags of ceramic fiber embers and rock wool are provided. The ceramic fiber comes in chunks that are about 4in (10.2cm) long. Break these roughly in half and place them irregularly around the burner. When there is a sparse but even layer of embers, spread the rock wool in the same manner. DO NOT pack this ember material as this could create an unsafe condition. The pieces should be lightly placed so they don't completely block any of the small burner ports. DO NOT allow any of the embers to rest against the pilot assembly.

Caution: Use only the type of ember material supplied with this fireplace. Due to the irregular size of the ember material, there may be more than required. Use of other foreign materials on the burners may create dangerous conditions.

Secondary Installation

Log Set Assembly:

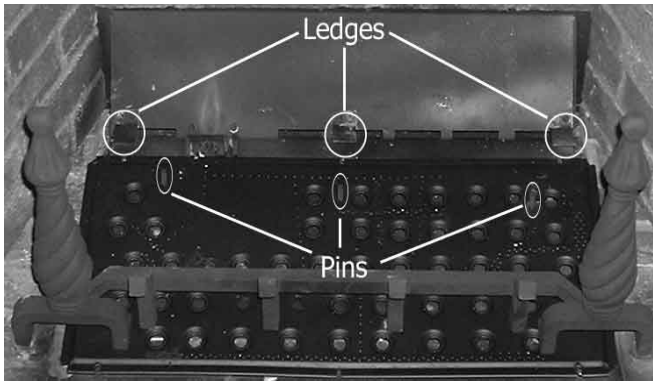

Figure 27. Placement of ledges and pegs in empty firebox.

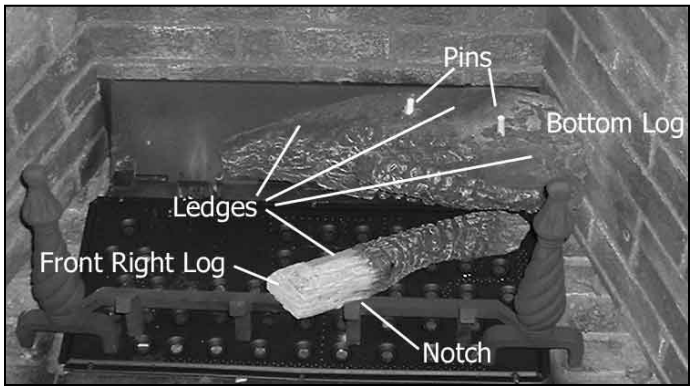

Figure 28. First Stage Log Set Installation

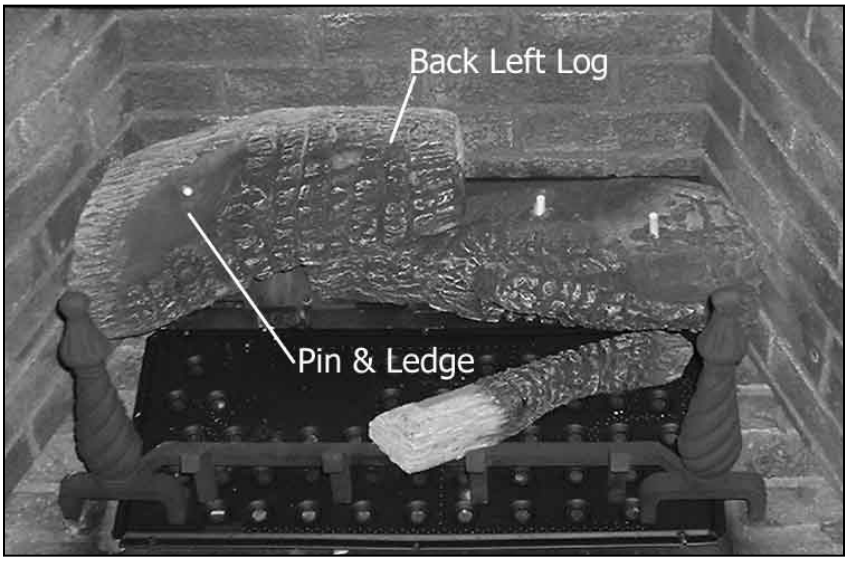

Figure 29. Second Stage Log Set Installation

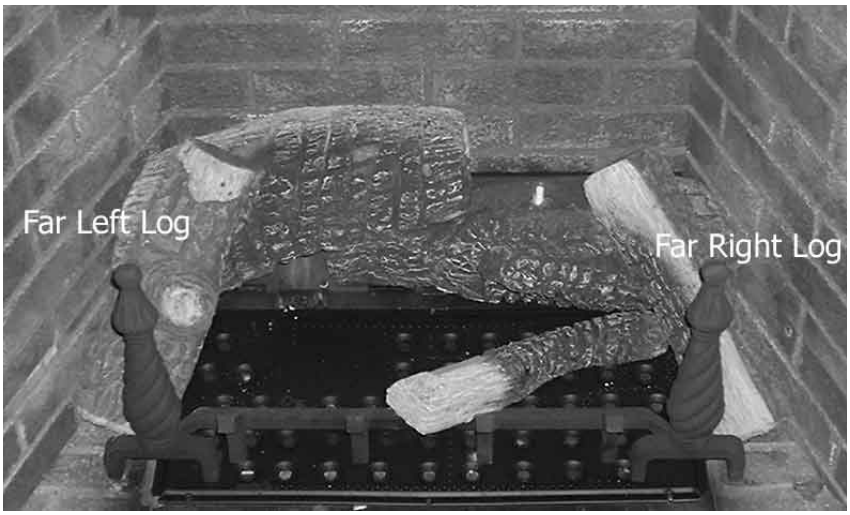

Figure 30. Third Stage Log Set Installation

Figure 27: This is how the fire box looks with only the andirons and grate in place. This points out the three ledges at the back and three locator pins on the burner.

Figure 28: The first log to be placed is the **front right log**. The back end has a hole that sits on the right burner pin and the front has a notch that helps it rest on the center of the grate against one of the vertical bars. Second to be placed is the **bottom log**. The bottom log rests on the center and right ledge in the firebox and the large end must be flat against the right brick liner.

Figure 29: The **back left log** rests on the left ledge in the firebox and the left ledge on the bottom log. The large end must be flat against the left brick liner.

Figure 30: The top of the **far left log** has a hole that rests on the pin and ledge of the back left log. The bottom of the far left log rests against the base of the left andiron. The top of the **far right log** has a hole that rests on the right pin and ledge of the bottom log and the bottom of the far right log rests against the base of the right andiron.

Secondary Installation

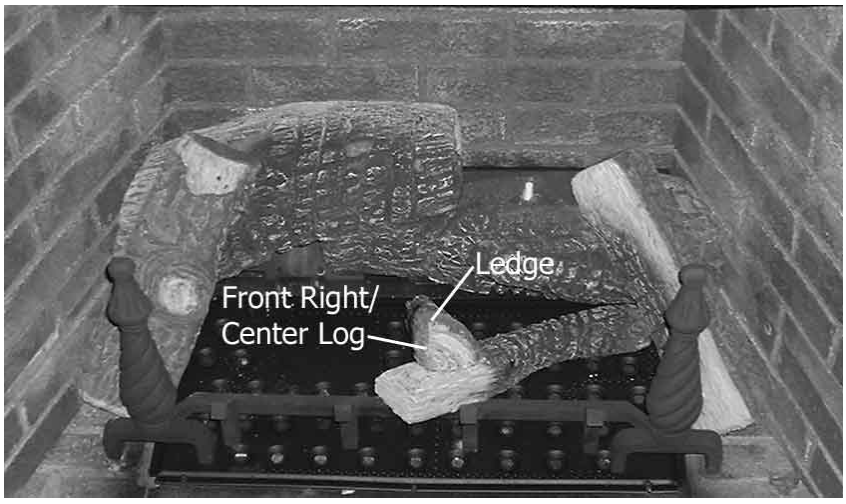

Figure 31. Fourth Stage Log Set Installation

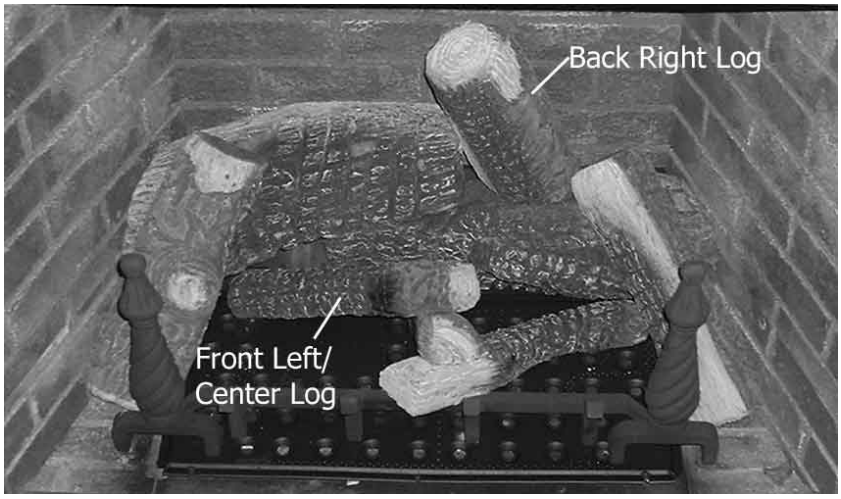

Figure 32. Fifth Stage Log Set Installation

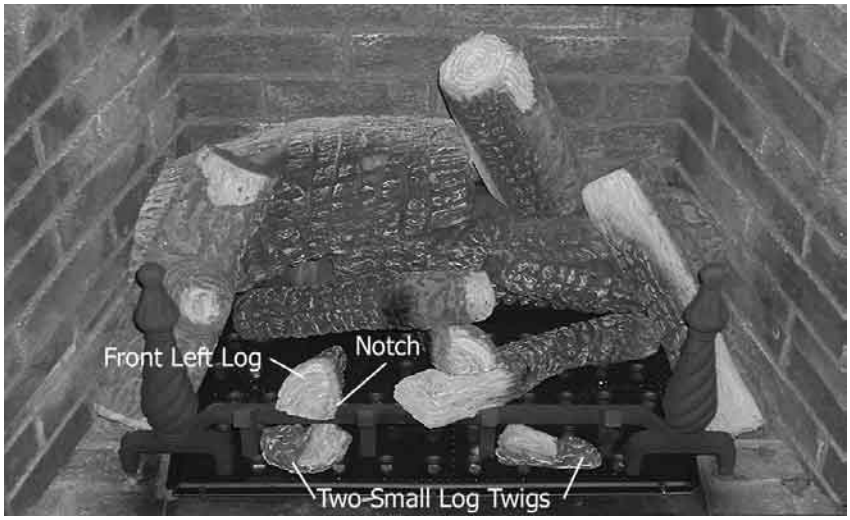

Figure 33. Final Log Set Arrangement

Figure 31: Back end of the **front right/ center log** has a hole that rests over the center burner pin and the front rest on the ledge of the front right log.

Figure 32: The **back right log** sits on the center ledge and pin of the bottom log and leans against the back left log. The back end of the **front left/center** log has a hole that rests on the left burner pin and the front end rests on the ledge on the front right/center log.

Figure 33: The **front left log** has a notch at it's wide end. This notch rests on the horizontal bar of the grate in the left gap. The back of the log rests freely on the burner where it will cover the least amount of burner holes. The **two small log twigs** are just placed under the grate, one in the left gap and the other in the right gap.

NOTE: While the glass is still removed, it is recommended that the gas line be purged by lighting the pilot.

Maintenance: Once a year, the logs should be removed and checked for deterioration or large amounts of soot. A small amount on the bottom side of the logs is normal. Remove and replace the logs in the same manner described above.

If new/more embers and rock wool is required, contact your nearest ENVIRO dealer.

When lighting the fireplace for the first time since the log set and embers have been installed/replaced, watch for ignition at ALL the burner ports. If a long delay is noticed, turn the appliance off and wait for it to cool down. Then remove the glass and rearrange the ember material, making sure none of the burner ports are blocked.

Never operate the fireplace with the glass door removed.

Secondary Installation

Pilot Light:

1. Turn off the gas to the fireplace. **If not recently done, remove the glass and let the unit air out for at least five (5) minutes to clear out any gas.** Turn on gas to the heater. Leak test all joints with soapy water. **NEVER USE OPEN FLAME FOR LEAK TESTING.**

2. Start the pilot by pressing the gas control knob and turning it to PILOT. While holding the gas control knob in, press the piezo ignitor several times until the pilot light starts. Holding the gas control knob in for 30 seconds. Check that the pilot has fully engulfed the thermocouple assembly (see Figure 2).

3. Start the main burner by turning the gas control knob to ON and then turn the rocker switch to ON. Check that all burner ports have flame.

4. Leak test all gas joints again.

Venturi Adjustment:

The venturi adjustment lever is centered above the control panel.

The venturi allows the amount of air coming into the fireplace to be adjusted in order to accommodate different climates and venting arrangements. Start the pilot and then the burner. Make sure the pilot flame is burning normally and none of the burner ports are plugged. Let the fireplace burn for roughly fifteen minutes and then examine the flames.



Figure 34. Venturi Adjustment Lever

The ideal flame will be blue at the base and light orange above. The flames should be of medium height. If the flames look like this, no venturi adjustment is needed. If the flames are fairly short and mostly blue, the fireplace is getting too much air. Therefore, the air shutter should be closed (push in) slightly until the correct flames are achieved. Flames that are very orange, with tall, dark, stringy tips, are not getting enough air. Open (pull out) the venturi until the flames clean up. If the venturi is opened, or closed all the way, and the correct flames cannot be attained, turn off the gas and contact the dealer.

Warning: Incorrect venturi adjustment may lead to improper combustion, which is a safety hazard. Contact the dealer if there is any concern about the venturi adjustment.

Trouble Shooting

Problem	Possible Cause	Solution
Spark will not light the pilot after repeatedly pressing the spark ignitor	Defective piezo ignitor	• Check connections to ignitor • If ignitor connections are good but no spark, replace ignitor.
	Broken spark electrode	• Check for broken ceramic insulation, replace electrode if broken.
	Misaligned spark electrode	• If spark is not arcing from electrode to pilot, loosen the screws on the pilot base adjust and tighten.
Pilot will not remain lit	Problem with thermocouple circuit	• Check for proper connection of the thermocouple to the rear of the valve. If loose, fully tighten. • Check pilot for full flame impingement around thermocouple. If flame is too small, check gas pressure, adjust pilot rate screw, check pilot head for damage. • Check thermocouple voltage at valve. It must be greater than 5mV. If low, replace thermocouple.
	Air in gas line (pilot dies while knob is depressed)	• Bleed line • Check gas line pressure • Contact dealer
Burners will not remain lit	Problem with thermopile circuit	• Check gas line pressure • Check for flame impingement on thermopile. If low, see "Pilot will not renain lit" • Check thermopile for minimum of 300mV when burner is switched on • Check wiring to thermostat for breaks
Flame lifting	Leak in vent pipe	• Check for leaks in vent connections
	Improper vent configuration	• Check vent configuration with manual
	Terminal may be recirculating flue gases	• Check to see if terminal is on correctly • May need to install high wind termination cap • Contact dealer
Glass fogs up	Normal Condition: after the appliance warms up the glass will clear. **Due to additives in gas, glass may get hazy during operation** Clean as needed	
Blue Flames	Normal during start up: flames will yellow as the fireplace heats up.	
Flames are burning "dirty" or sooting	Flame impingement	• Check log positioning • Increase primary air by opening the venturi shutter See also "Burners will not remain lit"
Remote control doesn't work	Problem with the remote	• One or more of the batteries are dead. See remote control instructions
	Problem with fireplace	• The on/off switch is turned to OFF • The gas control valve is turned to PILOT or OFF • The pilot has gone out

Warranty

Sherwood Industries Ltd. offers a Limited Lifetime Warranty on this gas product. This Limited Lifetime Warranty covers the appliance for a period of seven years from the date of installation. This warranty applies only to the original owner in the original location.

Covered under the lifetime warranty are the chassis and the heat exchanger. These steel components are covered against manufacturer's defects for seven years and the labour for the first year. The following exclusions apply: over-firing due to incorrect setup or tampering, damage caused by incorrect installation, usage or abuse. The unit must be properly installed by a qualified technician or installer, and must meet all local and national gas and building code requirements.

Under the Limited Lifetime Warranty, the following components are also covered: log set, burners and glass. The following exclusions apply:

Porcelain Finishes: Damage caused by chipping, scratching, marring, chemicals, fingerprints, abrasive cleaners, discoloration with age

Glass: Damage caused by the use of harsh or abrasive cleaners, striking the glass, surface contaminants

Log Set: Damage caused by incorrect handling or misuse

Burners: Damage caused by improper or continuous operation under incorrect conditions

Sherwood Industries Ltd. offers a two-year warranty against manufacturing defects on all the electrical components and gas components, paint is also covered against flaking. This offer includes parts and labour for one year, and parts only thereafter.

Your dealer shall make all claims under this warranty in writing.

WHEN FILING A WARRANTY CLAIM PLEASE COMPLETE THE FOLLOWING INFORMATION ON AN OFFICIAL WARRANTY CLAIM FORM:

TO THE DEALER:

Name, address and telephone number of purchaser and date of purchase, date of installation, name of installer and dealer, nature of complaint, defects or malfunction, description and part number of any parts replaced.

TO THE DISTRIBUTOR:

Sign and verify that work and information are correct.

This warranty covers defects in materials and workmanship only if the product has been installed according to the manual's instructions. If the product is damaged or broken as a result of misuse or mishandling, the warranty does not apply. The warranty does not cover removal and reinstallation costs.

Sherwood Industries Ltd. reserves the right to repair or replace the defective product. The shipping costs are to be paid by the consumer. All warranties by the manufacturer are set forth and no claim shall be made against the manufacturer on any oral warranty or representation.

Sherwood Industries Ltd. and its' employees or representatives will not assume any damages, either directly or indirectly, caused by improper usage, operation installation, servicing or maintenance of this appliance.

Sherwood Industries Ltd. reserves the right to make changes without notice. Please complete and mail the warranty registration card and have the installer fill in the installation data sheet in the back of the manual for warranty and future reference.

Parts List

Part Number	Description
50-718	Door, Glass & Gasket
50-634	Door Gasket Only (need 10ft)
50-635	Door Handle Set (2 handles per set)
50-632	Door Latch Mechanism
50-719	Pan Burner
50-343	Blank Orifice #73 - All Gas Models
EC-011	Spark Electrode with Ignitor Cable (Post 10/00)
EC-023	S.I.T. Piezo Ignitor
EC-025	FS Burner Switch
EC-039	FPI Fan Controller 115V
50-726	Control Panel
EC-015	Fully Assembled Pilot NG
EC-016	Fully Assembled Pilot LP
EC-012	Thermopile
EC-009	Thermocouple (Post 10/100)
EC-006	S.I.T. Nova Valve NG (50% turn down)
EC-007	S.I.T. Nova Valve LP (50% turn down)
EC-001	120 Ceramic Fan Temperature Sensor
50-514	Convection Blower 115V
50-727	Burner Tray Complete
50-728	Ceramic Brick Liner
50-729	Grate
50-730	Andiron
50-731	Log Set With Embers
50-491	Embers (need to order 2 sets)
50-732	Bottom Log
50-733	Back Left Log
50-734	Back Right Log
50-735	Far Left Log
50-736	Far Right Log
50-737	Front Left Log
50-738	Front Left/Center Log
50-739	Front Right/Center Log
50-740	Front Right Log
50-753	Two Small Log Twigs
50-741	DV50DX Owner's Manual
50-742	DV50DX Conversion Kit from LPG to NG
50-757	DV50DX Conversion Kit from NG to LPG

Part Number	Options
50-702	DV50DX The Lodge - Painted Charcoal Face With Plated Brushed Nickel Louvres & Knobs
50-703	DV50DX The Chalet Flat Arched Face w/ gold knobs & bolts- Metallic Charcoal
50-704	DV50DX The Chalet Plated Flat Arched Face - Gold
50-705	DV50DX The Chalet Plated Flat Arched Face - Brushed Nickel
50-706	DV50DX The Chalet Plated Flat Arched Face - Anitque Copper
50-707	DV50DX The Cottage Bow Face Painted Charcoal - (No Trim)
50-708	DV50DX The Cottage Trim Kit - Painted Charcoal (2 Inset Pieces, Carriage Bolts, Top & Bottom Trim Pieces)
50-709	DV50DX The Cottage Trim Kit - Anitque Copper (2 Inset Pieces, Carriage Bolts, Top & Bottom Trim Pieces)
50-710	DV50DX The Cottage Trim Kit - Pewter (2 Inset Pieces, Carriage Bolts, Top & Bottom Trim Pieces)
50-711	DV50DX The Cottage Trim Kit - Gold (2 Inset Pieces, Carriage Bolts, Top & Bottom Trim Pieces)
50-712	DV50DX The Cape Cod Arch With Opening Doors & Fire Screen Painted
50-559	On/Off Remote Control Kit
50-583	Programmable Wall Mounted Remote Control
50-717	DV50DX Cast Iron Firebox Liner Set Porcelain Black
50-725	DV50DX The Lodge Steel Template
50-722	DV50DX The Chalet Steel Template
50-723	DV50DX The Cottage Steel Template
50-724	DV50DX The Cape Cod Steel Template

Parts Diagram

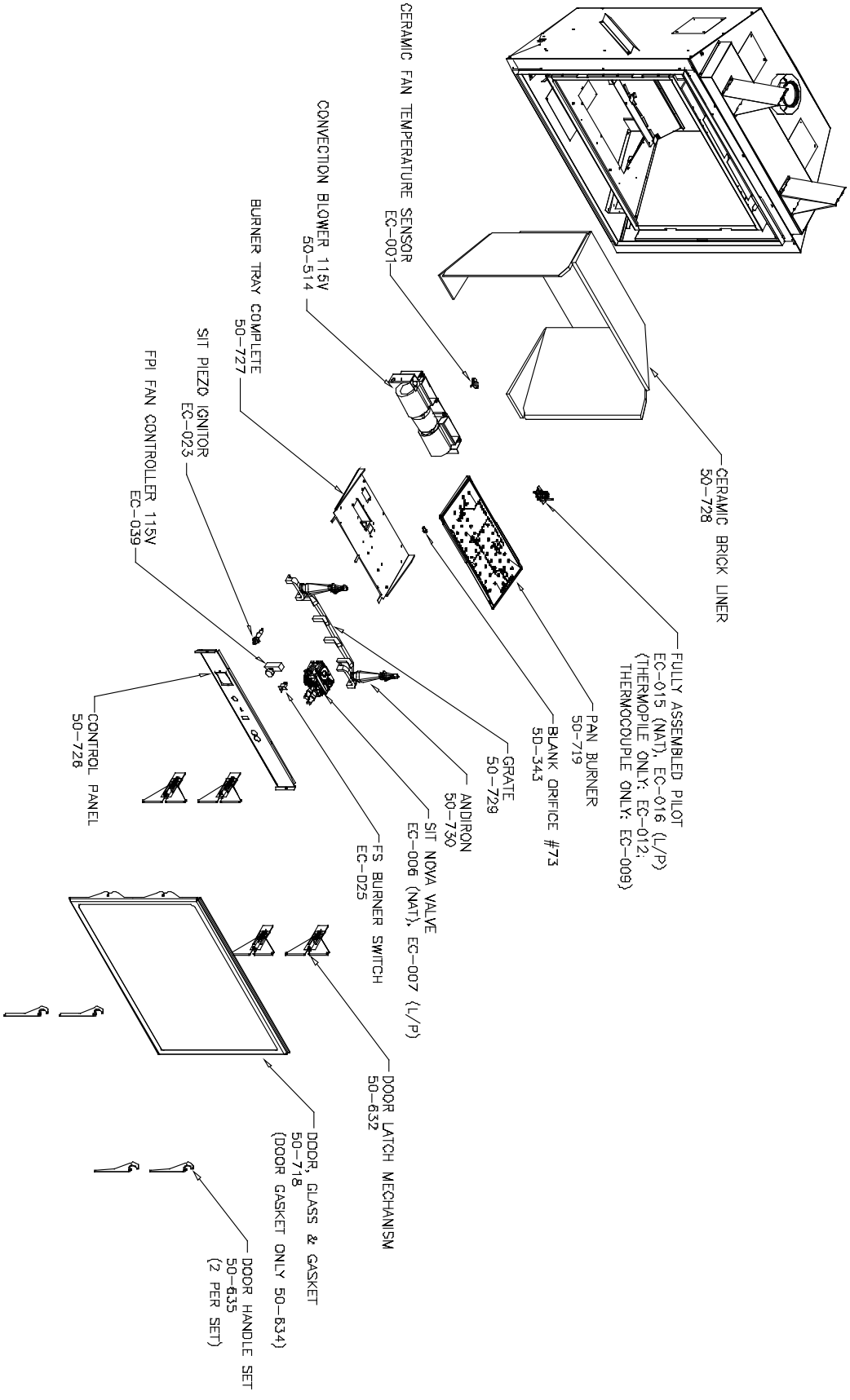

Index

A

Adjusting
- Air Diverter 7
- Fan Speed. *See* Blower Speed
- Flame Height 7
- Venturi 26

B

Blower Speed 7
BTU Input/Output 22

C

Cap. *See* Vent Cap
Clearances 13–15, 17, 20
Condensation 8, 14
Corner Installation 11

D

Data Sheet 32
Dimensions 5, 10–12
Ducting 20

E

Elbow 15–18
Electrical 21

F

Faces 8
Facing 12
Floor Protection 12
Framing 10–12, 15
Fuel Conversion 9

G

Gas
- Connection 22
- Control 6–7, 22
- Inlet/Supply Pressure 22
- Smell 1, 6

Glass
- Cleaning 8
- Gasket 8
- Installation/Removal 23

H

Hearth Requirements 12
Heating Specifications 22
Horizontal Vent Termination 17

L

Leaking Gas 1, 6, 22, 26
Log Set Installation/Removal 23-25

M

Maintenance 8–9, 25
Mantel Requirements 13

O

Operating of Fireplace 6–7

P

Parts List 29–30
Pilot Flame 6, 26

R

Remote control 7

S

Safety Precautions 2
Smoking 2, 27
Starting Fireplace 6–7

T

Terminal Clearances 13–14, 14–15
Trouble Shooting 27
Turning Fireplace ON/OFF 6–7

V

Vent
- Cap 17–19
- Configurations 16
- Part Numbers 13, 14
- Restrictor 16

Vertical Vent Termination
- Flat Roof 18–19
- Pitched Roof 18–19

W

Warnings 1–2
Warranty 28
Wiring 21

Installation Data Sheet

The following information must be recorded by the installer for warranty purposes and future reference.

NAME OF OWNER:

_____

ADDRESS:

_____

_____

_____

PHONE:_____

NAME OF DEALER:

_____

ADDRESS:

_____

_____

_____

PHONE:_____

MODEL:_____

SERIAL NUMBER:_____

DATE OF PURCHASE: _____ (dd/mm/yyyy)

DATE OF INSTALLATION:_____(dd/mm/yyyy)

☐ NATURAL GAS (NAT) ☐ PROPANE(LPG)

INLET GAS PRESSURE:_____in wc

MAIN BURNER ORIFICE:_____# DMS

PILOT ORIFICE #_____OR_____in diam.

INSTALLER'S SIGNATURE:

_____

NAME OF INSTALLER:

_____

ADDRESS:

_____

_____

_____

PHONE:_____

MANUFACTURED BY:
SHERWOOD INDUSTRIES LTD.
6782 OLDFIELD RD. SAANICHTON, BC, CANADA V8M 2A3
www.envirofire.biz
September 3, 2003
C-10044