SHERWOOD INDUSTRIES IS AN ENVIRONMENTALLY RESPONSIBLE COMPANY. THIS MANUAL IS PRINTED ON RECYCLED PAPER.

PLEASE KEEP THESE INSTRUCTIONS FOR FUTURE REFERENCE

Enviro

PELLET STOVE

Evolution

OWNER'S MANUAL

CE 2003



Sherwood Industries Ltd.
Saanichton, Canada

DIN 18 891
P–BWU 10/00017

IBP
Fraunhofer Institut bauphysik

PLEASE READ THIS ENTIRE MANUAL BEFORE INSTALLATION AND USE OF THIS PELLET-BURNING ROOM HEATER. FAILURE TO FOLLOW THESE INSTRUCTIONS COULD RESULT IN PROPERTY DAMAGE, BODILY INJURY OR EVEN DEATH.

Contact your building or fire officials about restrictions and installation inspection requirements in your area.

Table of Contents

Table of Contents.....2
Introduction.....3
- Important Safety Data.....3
- Warnings and Recommendations.....3
- Automatic Safety Features of Your Pellet Stove.....3
- Rating Label Location.....4
- Appliance Dimensions.....4

Operating Instructions.....5
- Control Board Functions.....5
- Turning Pellet Stove On (Circuit Board).....5
- How to Turn On And Operate Your Pellet Appliance (Timer Control).....6
- Slider/Damper Set-Up.....7
- Routine Cleaning and Maintenance.....8

Warranty.....10
Installation Data Sheet.....11

Introduction

Important Safety Data:

This unit is designed to burn pelletized wood fuel only. Do not use any other type of fuel, this will void any warranties stated in this manual.

The ash pan must be locked securely for proper and safe operation of the pellet stove.

Since Sherwood Industries Ltd. has no control over the installation of your stove, we grant no warranty implied or stated for the installation or maintenance of your stove, therefore, Sherwood Industries Ltd. assumes no responsibility for any consequential damage.

Warnings and Recommendations:

A. Do not abuse the glass by striking or slamming the door shut.

B. Do not attempt to operate the stove with broken glass.

C. Do not attempt to open the door and clean the glass while the unit is in operation. To clean the glass, use a soft cotton cloth and mild window cleaner, gas or wood stove glass cleaner or take a damp paper towel and dip into the fly ash, this is a very mild abrasive and will not damage the glass.

D. Do not use abrasive cleaners to clean the surface or any part of the stove.

E. It is recommended that the unit be secured into its' position in order to avoid any displacement.

F. Never use gasoline, gasoline-type lantern fuel, kerosene, or similar liquids to start the fire. Keep all such liquids well away from the pellet stove while it is in use.

G. Disposed ashes should be placed in a metal container with a tight-fitting lid. The closed container of ashes should be on a non-combustible floor on the ground, well away from all combustible materials pending final disposal. The ashes should be retained in the closed container until all cinders have thoroughly cooled before disposing of them.

H. Make sure the ash pan is closed tightly during the operation of the stove.

I. Fresh air intake is strongly recommended. Failure to install intake air may result in the unit smoking during power failures as well as improper combustion.

KEEP ASH PAN FREE OF RAW FUEL. DO NOT PLACE UNBURNED OR NEW PELLET FUEL IN ASH PAN. A fire in the ash pan could be the result.

Automatic Safety Features of Your Pellet Stove:

A. The stove will shut off when the fire goes out and the exhaust temperature drops below 120°F (49°C).

B. The stove has a high temperature safety switch. If the temperature on the hopper reaches 200°F (93°C), the auger will automatically stop and the stove will shut down when the exhaust temperature cools. If this happens, call your local dealer to reset the 200°F (93°C) high limit switch. **ALSO FIND THE REASONS WHY THE UNIT OVERHEATED.**

Introduction

Rating Label Location:

The rating label is located on the inside of the ash pan cover.

Appliance Dimensions:

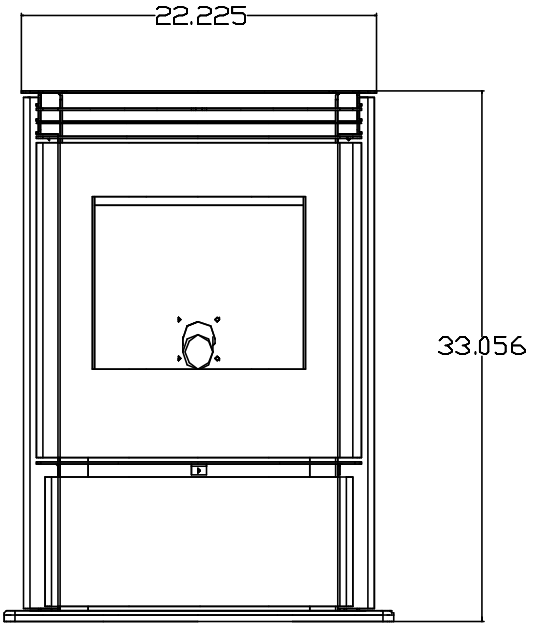

Front View

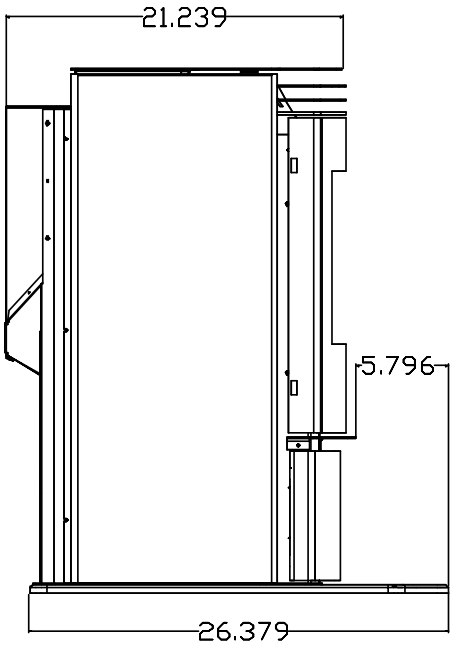

Side View

UNIT DIMENSIONS

HEIGHT: 33.056 (83.96 CM)

WIDTH: 22.225 (56.45 CM)

DEPTH: 21.239 (53.94 CM)

HEARTH PAD:

WIDTH: 24.360 (61.87 CM)

DEPTH: 27.864 (70.77 CM

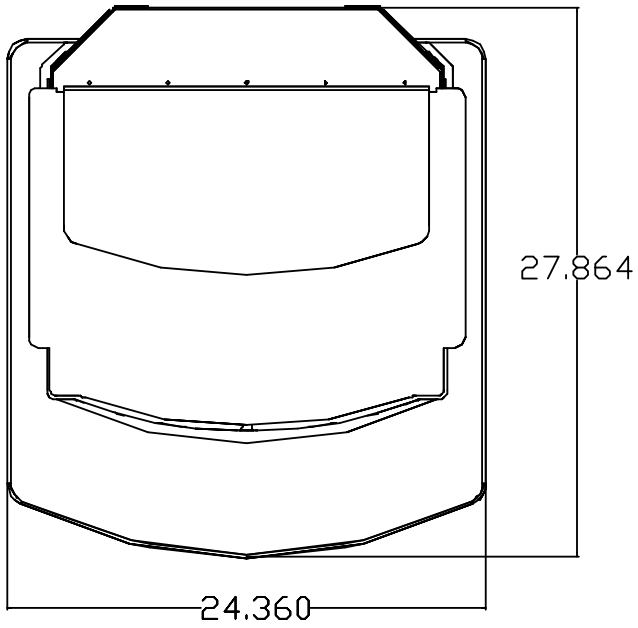

Top View

Operating Instructions

Control Board Functions:

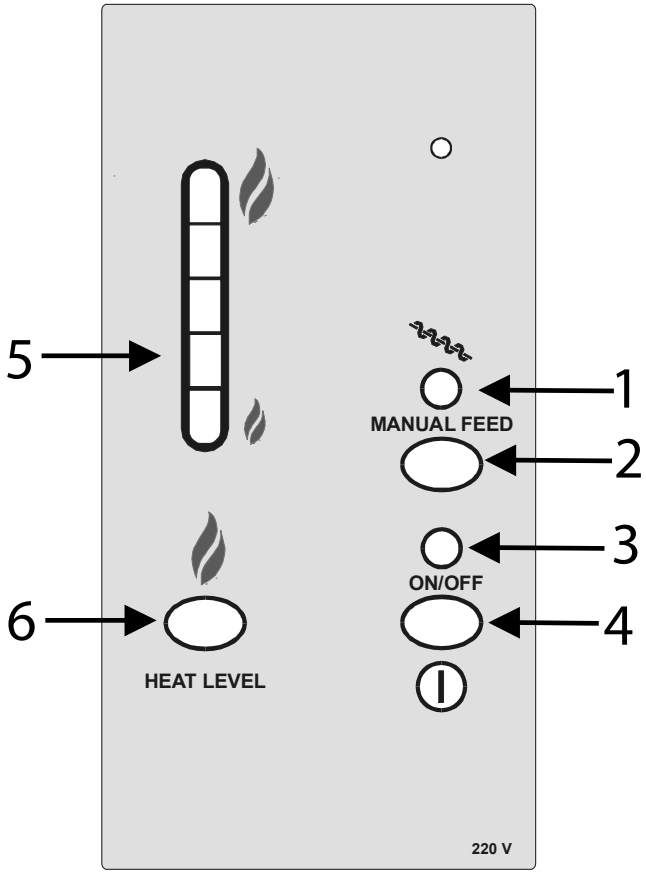

1. AUGER PULSE LIGHT: This light will flash in conjunction with the auger.

2. MANUAL AUGER FEED: If the unit runs out of fuel this button can be used to "prime the auger system". This button will turn off after 60 seconds, then must be released and pressed again.

3. SYSTEM LIGHT: Responsible for signaling the state of the control board. If flashing, the board is under control. If the light is solid, setting can be altered.

4. ON/OFF BUTTON: Used to turn the unit ON and OFF

5. HEAT OUTPUT INDICATOR: Shows the present heat output setting.

6. HEAT LEVEL ADJUSTMENT: When pressed, will change the heat setting of the unit from low to high.

Turning Pellet Stove On (Circuit Board):

WITHOUT THERMOSTAT:

Ensure the hopper has sufficient fuel or pellets to start the unit.

1. Press the ON / OFF button (4) to start the appliance. System light (3) will flash, auger light (1) will flash with the pulse of the auger, heat level indicator will show with no control until the system light becomes solid.

2. If this is the first time the unit has been started or the unit has run out of fuel, press the Manual Auger Feed button (2) and hold down for 60 seconds. This will help "prime the auger," deliver fuel to the burn pot, and help light the unit more quickly.

When a fire has been established, the system light will become solid and the auger light will continue to flash. The heat output button (6) can be pressed to achieve the desired heat setting.

Operating Instructions

How to Turn On and Operate Your Pellet Appliance (Timer Control):

1. Check and fill hopper with pellets.

2. Make sure unit is plugged into a working outlet.

3. Switch the power "ON" by pushing the start up switch once only.

4. Pull the slider damper rod OUT 1/2" INCH (1.27 CM). Turn knob "B" to the 2 o'clock position. **(Lower grade pellets may need a higher setting on the feed rate).**

NOTE: unit will take longer to light if the hopper has been completely emptied.

5. Wait until the fire is established, then turn knob "B" to the desired heat output. (The stove may not be able to burn in the BLUE ZONE if poor quality wood pellets are being used.)

6. If the stove should shut off after 15 minutes and there is still a fire in the firebox, press the start up switch once more. If the fire goes out, return to step number 2 and re-light the stove.

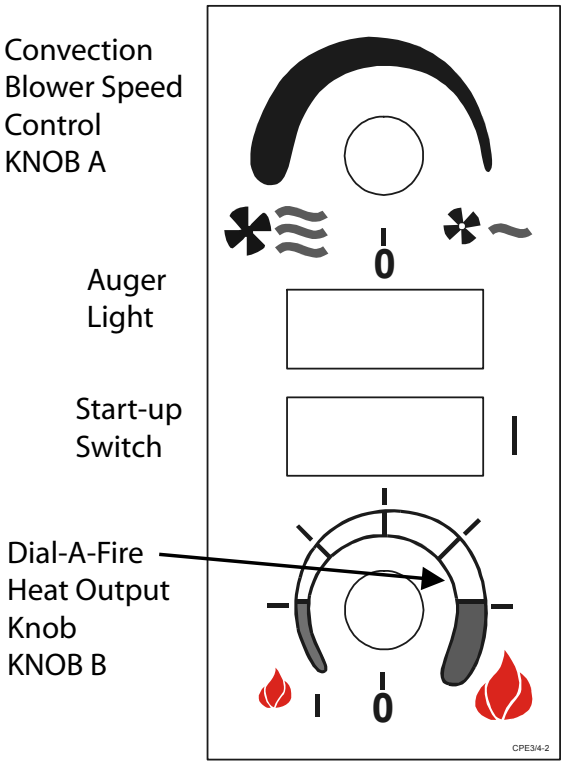

Place the Heat Output knob at 2 o'clock when starting

KNOB "A": Fan Controller. By adjusting the knob, you will vary the rate of airflow into the room by varying the speed of the convection blower. When you first start the stove, it should be placed in the "OFF" position in order to heat the unit as quickly as possible. Once the room has come up to temperature, the control may be set to a comfortable level.

The flashing green **"Auger Light"** corresponds to the timing of the auger turning.

KNOB "B": Dial a Fire Heat Output Knob. This knob controls the amount of heat output. The dial has a scale with the **blue zone** representing the coolest setting of the stove, and the **red zone** representing the hottest setting. The scale on knob "B" represents a range; times and fuel quantities are not exact. Wood pellets of differing quality may effect the performance of the stove. If the stove has trouble operating at either end of its range, turn the heat output knob back slightly.

SPECIAL NOTE: Soft wood pellets and higher moisture content pellet fuels could experience problems burning on low and lower settings. If this is the case, turn the Heat Output Knob up slightly to compensate for poor quality fuels. If the unit is going out on lower heat output settings, the slider damper should be pushed in part way. If operating on low and the unit goes out, the slider damper should be pushed all the way in.

TURNING OFF YOUR PELLET STOVE:
To turn your stove off, simply turn the HEAT OUTPUT knob (knob "B") counter-clockwise until the knob clicks to the "OFF" position. This will stop the feed of pellets. The blowers will continue to run and cool the stove. When cool enough, the stove will shut down

Operating Instructions

Slider/Damper Set-Up:

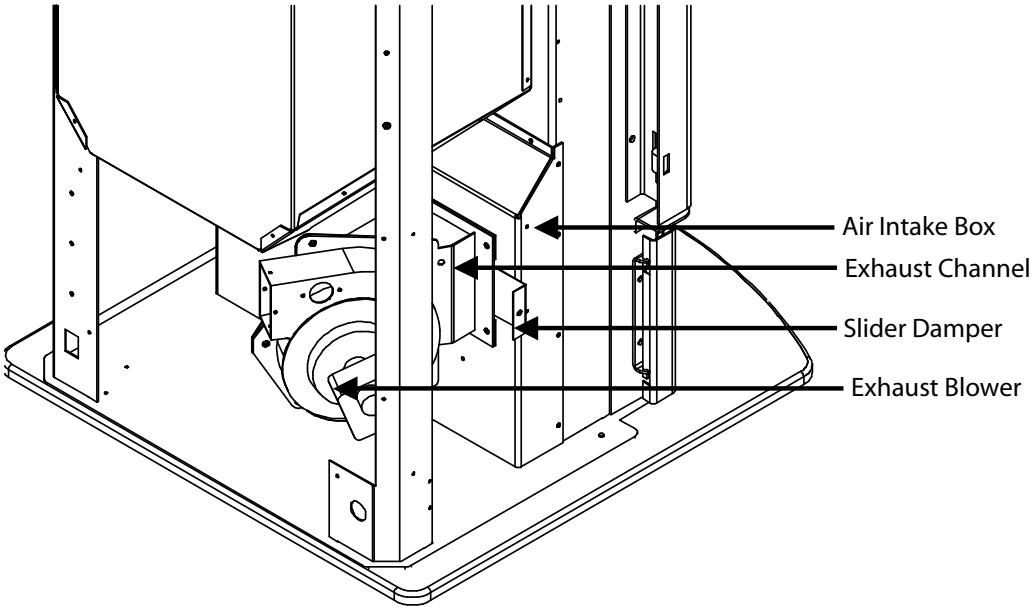

If the fire should happen to go out and the heat output indicator has been set on the lowest setting, the Slider Damper should be pushed in slightly, decreasing the air in the firebox.

If, after long periods of burning, the fire builds up and over flows the burn pot or there is a build up of clinkers, this would be a sign that the pellet quality is poor and the slider damper must be pulled out to compensate, letting more air in the firebox.

Pulling the slider damper out gives the fire more air.

The easiest way to make sure that an efficient flame is achieved is to see the characteristics of the fire.

- A tall and lazy flame with dark orange tips requires more air – Open slider / damper up.
- A short and brisk flame, like a blowtorch, has too much air – Close slider / damper down.
- If the flame is in the middle of these two characteristics with a bright yellow/orange, active flame then the air is set for proper operation.

SPECIAL NOTES:

Pellet quality is a major factor in how the Pellet stove will operate. If the Pellets have a high moisture content or ash content the fire will be less efficient and has a higher possibility of the fire building up and creating clinkers (hard ash build-up).

Operating Instructions

Routine Cleaning and Maintenance:

The following list of components should be inspected and maintained routinely to ensure that the appliance is operating at its' optimum and giving you excellent heat value:

2-3 DAYS/WEEKLY	SEASON or 2 TONS OF FUEL
Burn Pot and Liner	Exhaust Vent
Ash Pan	Fresh Air Intake Tube
Inside Firebox	Blower Mechanisms
Door Glass	Heat Exchanger Tubes
Heat Exchanger Tubes	Behind Firebox Liners
Ash Pan and Door Gaskets	All Hinges
Door Latch	Post Season Clean-up

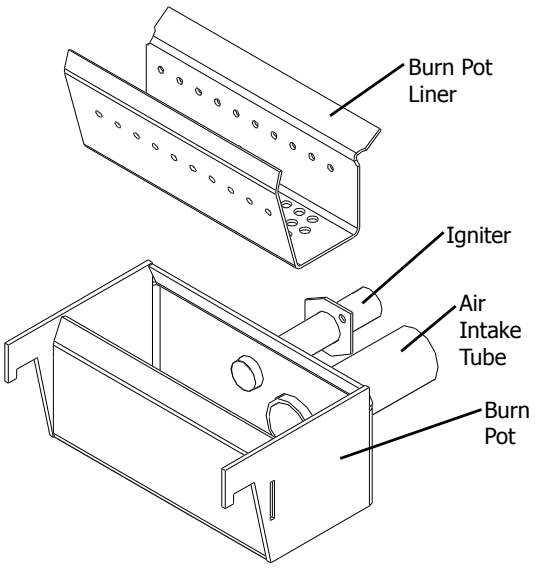

TOOLS REQUIRED TO CLEAN UNIT:
Torx T-20 Screwdriver, 5/16" wrench or socket, Brush, Soft Cloth, Vacuum with fine filter bag

ASH PAN AND DOOR GASKETS
After excessive use the gasketing may come loose. To repair this, glue the gasketing on using high-temperature fiberglass gasket glue available from your local dealer. This is important to maintain an airtight assembly.

DO NOT PLACE UNBURNED OR RAW PELLET FUEL IN ASH PAN.

BURNER POT AND LINER

This is the 'pot' where the pellets are burned. Every two to three days (when the unit is cold), remove the burn-pot liner from the stove. Using a metal scrapper, remove material that has accumulated or is clogging the liner's holes. Then dispose of the scrapped ashes from the liner and from inside the burn-pot. Place the burn-pot back into the stove, making sure that the pipes are properly inserted into the burn pot. Place the liner back into the burn-pot, making sure that the ignitor hole in the liner is aligned with the ignitor tube. Pushing the liner up against the ignitor tube.

To remove the burn pot and burn pot liner, open the door using the door handle provided (located on the left-hand side of the stove). Swing the door open. Lift the liner from the burn pot. Lift the burn pot from the firebox by gently lifting up the front of the burn pot, then sliding the assembly from the air intake tube and the ignitor cartridge.

FREESTANDING ASH PAN:

This part is located under the burner, in the pedestal, and has a latching mechanism to secure it. To remove the ash pan, open the cover from the right hand side, unlock the latch on the pedestal cover and pull the pan out. Dump the ashes into a metal container stored away from combustibles. Monitor the ash level every week. Remember that different pellet fuels will have different ash contents. Ash content is a good indication of fuel efficiency and quality. Refer to "Warnings and Recommendations" for disposal of ashes.

DO NOT PLACE UNBURNED OR RAW PELLET FUEL IN ASH PAN.

Operating Instructions

DOOR GLASS

(It is recommended that your dealer replace the glass if broken.)
The door glass is made of high temperature PYRO CERAMIC. The center panel is 14" x 14" inches (35.5cm x 35.5 cm). To replace the glass, unscrew and remove the four glass retainers. Remove the glass and any broken pieces. High temperature fiberglass tape should be used around the glass. Replace the glass by securing the glass retainers back to the frame.

FRESH AIR INTAKE

Inspect periodically to be sure that it is not clogged with any foreign materials.

EXHAUST PASSAGES

Removal of the firebox backing for bi-annual cleaning

- Open the door by lifting the handle, Remove the burn pot and burn pot liner.
- Lubricate all screws with penetrating oil.
- Remove the four screws that hold the side panels in place.
- With the tip of a flat screwdriver, gently lift up the side panels and remove the side panels.
- Pull the center panel out.
- Vacuum thoroughly.

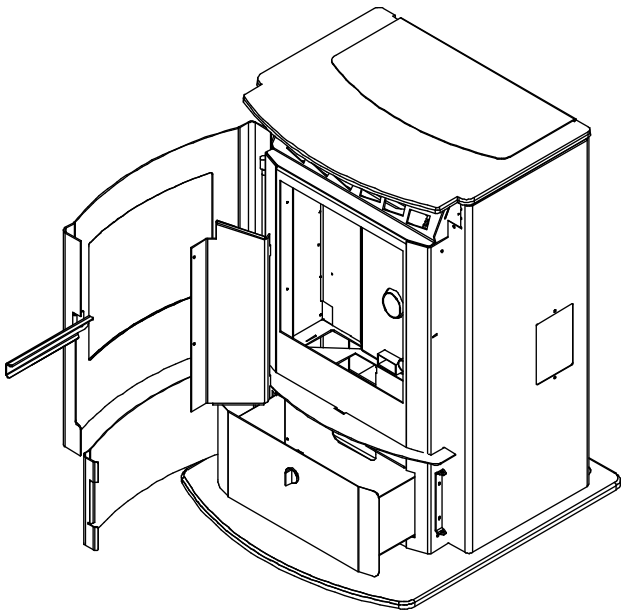

Installation of firebox backing:

- Insert center panel.
- Place the side panels back into the firebox and reinstall the two screws on each side.
- Replace the glass door and secure.
- Clean thoroughly.

EXHAUST VENT

This vent should be cleaned every year or after two tons of pellets. We recommend contacting your dealer for professional cleaning. To clean the vent pipe, tap lightly on the pipe to dislodge any loose ash. Open the bottom of the "T" to dump the ash, then vacuum as much of the ash out of the vent pipe as possible.

HEAT EXCHANGER TUBES
A handle is located under the unit top, in the center of the stove just above the door. This handle is to be pulled up and down a few times (ONLY WHEN THE UNIT IS COLD) in order to clean away any fly ash that may have collected on the heat exchanger tubes. As different types of pellets produce different amounts of ash, cleaning of the tubes should be done on a regular basis to enable the unit to run efficiently.

POST SEASON CLEAN-UP
Once you are finished using the pellet appliance for the season, unplug the stove for added electrical protection. It is very important that the stove be cleaned and serviced as stated above.

Warranty

Sherwood Industries Ltd. gives a five year limited warranty on all steel manufactured parts. A one-year warranty is provided on all electrical components. The above limited warranties are extended only to the original purchaser.

There is no warranty on the following parts:

- Fiberglass rope baskets
- refractory material
- burn pot liner
- paint
- enamel finish or gold plating where it applies
- vacuum hose.

****NOTE:** The paint on the brick firebox lining may peel. This is due to the extreme conditions applied to the paint and is in no way covered under warranty.

WHEN FILING A WARRANTY CLAIM PLEASE COMPLETE THE FOLLOWING INFORMATION ON AN OFFICIAL WARRANTY CLAIM FORM:

TO THE DEALER:

- Name, Address and Telephone Number of purchaser and date of purchase.
- Date of Installation. Name of the installer and dealer. Serial Number of the appliance. Nature of the complaint, defects or malfunction, description and part # of any parts replaced.

TO THE DISTRIBUTOR:

- Sign and verify that work and information are correct.

ENSURE THAT YOU SPECIFY THE NATURE OF THE COMPLAINT, DEFECT, PERIODICAL MALFUNCTION, ETC.

The limited warranty covers defects in materials and workmanship as long as the products have been installed according to the manual's instruction. If the product is damaged or broken as a result of mishandling or misuse, the warranty does not apply. Removal and re-installation costs are not covered under this warranty.

It is the manufacturer's option whether to repair or replace the appliance. The shipping cost to and from the factory is paid by the consumer. All warranties by the manufacturer are set forth herein and no claim shall be made against the manufacturer on any oral warranty or representation.

Sherwood Industries Ltd. assumes no responsibility for damage caused by household power fluctuations or power surges.

Under Warranty

For the do-it-yourself individual

The consumer should be aware that the pellet appliance needs setting using tools that he/she might not have. Consult an ENVIRO dealer. It is recommended than only an authorized ENVIROFIRE dealer installs an ENVIRO unit. There will be no warranty coverage on parts destroyed or burnt out as a result of a consumer installation error or defect.

Sherwood Industries Ltd. reserves the right to make changes without any notice.

Installation Data Sheet

The following information must be recorded by the installer for warranty purposes and future reference.

NAME OF OWNER:

_____

ADDRESS:

_____

_____

_____

PHONE:_____

NAME OF DEALER:

_____

ADDRESS:

_____

_____

_____

PHONE:_____

MODEL:_____

SERIAL NUMBER:_____

DATE OF PURCHASE: _____ (dd/mm/yyyy)

DATE OF INSTALLATION:_____(dd/mm/yyyy)

MAGNEHELIC AT INSTALL:_____

INSTALLER'S SIGNATURE:

_____

NAME OF INSTALLER:

_____

ADDRESS:

_____

_____

_____

PHONE:_____

MANUFACTURED BY:
SHERWOOD INDUSTRIES LTD.
6782 OLDFIELD RD. SAANICHTON, BC, CANADA V8M 2A3
www.envirofire.biz
July 11, 2003
C-10050