SHERWOOD INDUSTRIES IS AN ENVIRONMENTALLY RESPONSIBLE COMPANY. THIS MANUAL IS PRINTED ON RECYCLED PAPER.

PLEASE KEEP THESE INSTRUCTIONS FOR FUTURE REFERENCE

Enviro

PELLET STOVE

Alliance (EF3)

OWNER'S MANUAL

CE 2003



Sherwood Industries Ltd.
Saanichton, Canada

DIN 18 891
P–BWU 10/00016

IBP
Fraunhofer Institut bauphysik

PLEASE READ THIS ENTIRE MANUAL BEFORE INSTALLATION AND USE OF THIS PELLET-BURNING ROOM HEATER. FAILURE TO FOLLOW THESE INSTRUCTIONS COULD RESULT IN PROPERTY DAMAGE, BODILY INJURY OR EVEN DEATH.

Contact your building or fire officials about restrictions and installation inspection requirements in your area.

50-918

Table of Contents

Introduction.....3
- Important Safety Data.....3
- Pellet Quality.....4
- Warnings and Recommendations.....4
- Automatic Safety Features of Your Pellet Stove.....5
- Appliance Dimensions.....6
- Rating Label Location.....6

Operating Instructions.....7
- How to Turn On and Operate Your Pellet Appliance (Timer Control).....7
- Control Board Functions.....8
- Turning Pellet Stove On (Circuit Board).....8
- Slider/Damper Operation.....9
- Routine Cleaning and Maintenance:.....10

Warranty.....12

Installation Data Sheet.....13

Introduction

Important Safety Data:

Please read this entire manual before installation and use of this pellet fuel burning room heater. Failure to follow these instructions could result in property damage, bodily injury or even death.

CAUTION: DO NOT CONNECT TO ANY AIR DISTRIBUTION DUCT OR SYSTEM.

DO NOT BURN GARBAGE OR FLAMMABLE FLUIDS SUCH AS GASOLINE, NAPTHA OR ENGINE OIL.

UNIT HOT WHILE IN OPERATION. KEEP CHILDREN, CLOTHING AND FURNITURE AWAY. CONTACT MAY CAUSE SKIN BURNS.

Contact local building officials about restrictions and installation inspection requirements in your area.

The stove's exhaust system works with negative combustion chamber pressure and a slightly positive chimney pressure, it is very important to ensure that the exhaust system be sealed and airtight.

The use of grates or other methods of supporting the fuel is not permitted.

This unit is designed to burn pelletized wood fuel only. Do not use any other type of fuel, this will void any warranties stated in this manual.

THE USE OF CORDWOOD IS PROHIBITED BY LAW.

Do not burn with insufficient combustion air. A periodic check is recommended to ensure proper combustion air is admitted to the combustion chamber. Setting the proper combustion air is achieved by adjusting the slider/damper located on the left side of the stove.

It is advisable to clean the exhaust vent bi-annually or every two tons of pellets.

The grounded electrical cord should be connected to a standard 220-240 volts, 50 hertz electrical outlet and also must be accessible. If this power cord should become damaged a replacement power cord must be purchased from the manufacturer or a qualified ENVIRO dealer. Be careful that the electrical cord is not trapped under the appliance and that it is clear of any hot surfaces or sharp edges. This unit's maximum power requirement is 520 watts. (2.26-2.46 Amps).

Soot or creosote may accumulate when the stove is operated under incorrect conditions such as an extremely rich burn (black tipped, lazy orange flames).

When installing the stove in a mobile home, it must be electrically grounded to the steel chassis of the home and bolted to the floor. Make sure that the structural integrity of the home is maintained and all construction meets local building codes.

Be sure to maintain the structural integrity of the home when passing a vent through walls, ceilings, or roofs.

The ash pan and viewing door must be locked securely for proper and safe operation of the pellet stove.

Introduction

If you have any questions with regards to your stove or the above-mentioned information, please feel free to contact your local dealer for further clarification and comments.

Since Sherwood Industries Ltd. has no control over the installation of your stove, we grant no warranty implied or stated for the installation or maintenance of your stove. Therefore, Sherwood Industries Ltd. assumes no responsibility for any consequential damage.

Pellet Quality:

PELLET QUALITY IS IMPORTANT, PLEASE READ THE FOLLOWING PAGE.

Your pellet stove has been designed to burn wood pellets only. Since there are many manufacturers of wood pellets, it is important to select pellets that are free of dirt or any impurities. The Pellet Fuel Industries (P.F.I.) has established standards for wood pellet manufactures. We recommend the use of pellets that meet or exceed these standards. Ask your dealer for a recommended pellet type.

THE PERFORMANCE OF YOUR PELLET STOVE IS GREATLY AFFECTED BY THE TYPE AND QUALITY OF WOOD PELLETS BEING BURNED. AS THE HEAT OUTPUT OF VARIOUS QUALITY WOOD PELLETS DIFFER, SO WILL THE PERFORMANCE AND HEAT OUTPUT OF THE PELLET STOVE.

Since Sherwood Industries Ltd. has no control over the quality of pellets that you use, we assume no liability caused by the quality of wood pellets used.

P.F.I. PELLET STANDARDS:

Fines .....1% maximum through a 1/8" screen
Bulk Density.....40 lbs. per cubic foot minimum
Size.....1/4" to 3/8" diameter 1 – 1.5" long maximum
Ash Content.....1% maximum
Moisture Content.....8% maximum
Heat Content .....approximately 8200 Btu per lb. minimum

Check the burn-pot liner periodically to ensure that the holes are not blocked with clinkers, (clinkers are silica in the fuel that form a hard mass during the burning process). If they are blocked, remove the liner (when the unit is cold) and clean the clinkers out. The liner should be cleaned or scraped once every 2-3 days depending on wood pellet quality. Clean the holes in the lines with a small pointed object.

Store pellets at least 36" (1 m) away from the pellet stove.

Warnings and Recommendations:

A. Do not abuse the glass by striking or slamming the door shut.

B. Do not attempt to operate the stove with broken glass.

C. Do not attempt to open the door and clean the glass while the unit is in operation. To clean the glass, use a soft cotton cloth and mild window cleaner, gas or wood stove glass cleaner, or take a damp paper towel and dip into the fly ash. This is a very mild abrasive and will not damage the glass.

D. Do not use abrasive cleaners to clean the surface or any part of the stove.

E. It is recommended that the unit be secured into its' position in order to avoid any displacement.

F. Never use gasoline, gasoline-type lantern fuel, kerosene, or similar liquids to start the fire. Keep all such liquids well away from the pellet stove while it is in use.

G. Disposed ashes should be placed in a metal container with a tight-fitting lid. The closed container of ashes should be on a non-combustible floor on the ground, well away from all combustible materials pending final disposal. The ashes should be retained in the closed container until all cinders have thoroughly cooled before disposing of them.

H. Make sure the ash pan is closed tightly during the operation of the stove.

I. Fresh air intake is strongly recommended. Failure to install intake air may result in the unit smoking during power failures as well as improper combustion.

NOTE: Fresh air is mandatory on all units installed in "Mobile Homes" and "Air Tight" homes.

J. GOLD BARS: Please clean all fingerprints off of all gold parts, with denatured alcohol on a soft cloth, before firing the unit each time. Fingerprints, etc. can become permanently etched into the gold if not removed before operating the pellet heater.

K. BRICK PANEL: The paint on the steel brick panel may peel. This is due to extreme conditions applied to the paint and is in no way covered by warranty.

KEEP ASH PAN FREE OF RAW FUEL. DO NOT PLACE UNBURNED OR NEW PELLET FUEL IN ASH PAN. A fire in the ash pan could be the result.

Automatic Safety Features of Your Pellet Stove:

A. The stove will shut off when the fire goes out and the exhaust temperature drops below 120°F (49°C) for Circuit Board and 140°F (60°C) for Timer Control.

B. The stove has a high temperature safety switch. If the temperature at the back of the firebox reaches 200°F (93°C), the auger will automatically stop and the stove will shut down when the exhaust temperature cools. If this happens, call your local dealer to reset the 200°F (93°C) high limit switch. **ALSO FIND THE REASONS WHY THE UNIT OVERHEATED.**

C. The unit has a convection fan control over-ride. This function causes the convection fan to reach its' full speed when the temperature at the back of the firebox reaches 160°F (71°C). This is a normal safety feature of your unit. To compensate for the fan cycling action that may occur, turn up the blower control proportionately to the heat output.

D. If the power goes out, the unit will stop running. When the power comes back on, the stove will not restart unless the exhaust temperature is still above 120°F (49°C) for Circuit Board and 140°F (60°C) for Timer Control.

Introduction

Rating Label Location:

The rating label is located on the hopper lid.

Appliance Dimensions:

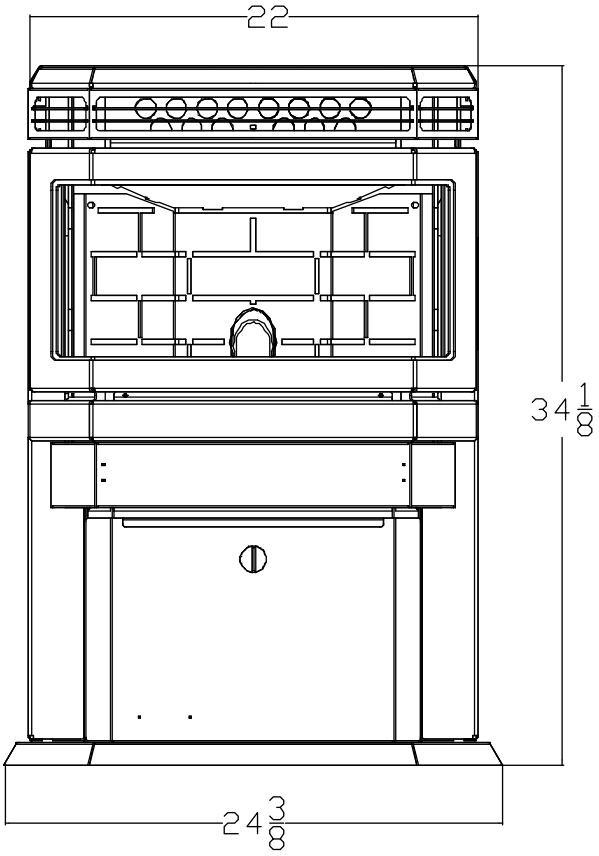

Front View

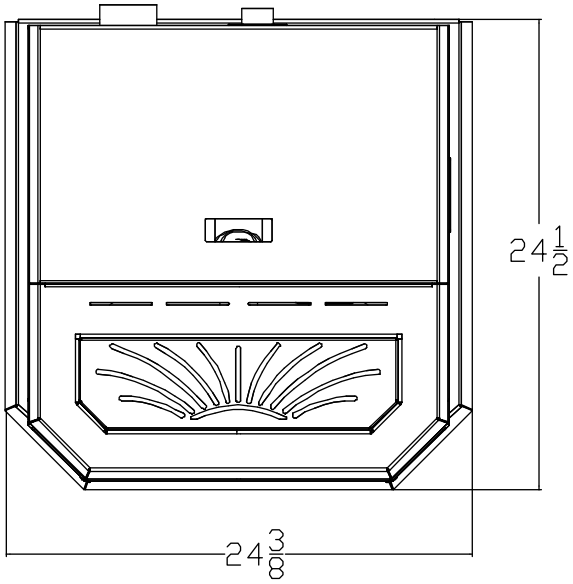

Top View

UNIT DIMENSIONS

HEIGHT: 34⅛ (86.68 cm)

WIDTH: 22 (55.88 cm)

DEPTH: 24½ (62.23 cm)

HEARTH PAD:

WIDTH: 24⅜ (61.79 cm)

DEPTH: 24½ (62.23 cm)

Operating Instructions

How to Turn On and Operate Your Pellet Appliance (Timer Control):

1. Check and fill hopper with pellets.

2. Switch on power by pushing the start-up switch once only.

3. Turn the Dial-A-Fire knob to the 12 o'clock position. **(Lower grade pellets may need a higher setting on the feed rate).**

NOTE: unit will take longer to light if the hopper has been completely emptied.

4. Wait until the fire is established, then turn knob "B" to the desired heat output. (The stove may not be able to burn in the BLUE ZONE if poor quality wood pellets are being used.) Adjust the Slider Damper to the appropriate setting.

5. If the stove should shut off after 15 minutes and there is still a fire in the firebox – press the start-up switch once more. If the fire went out, return to step number 2 and re-light the stove.

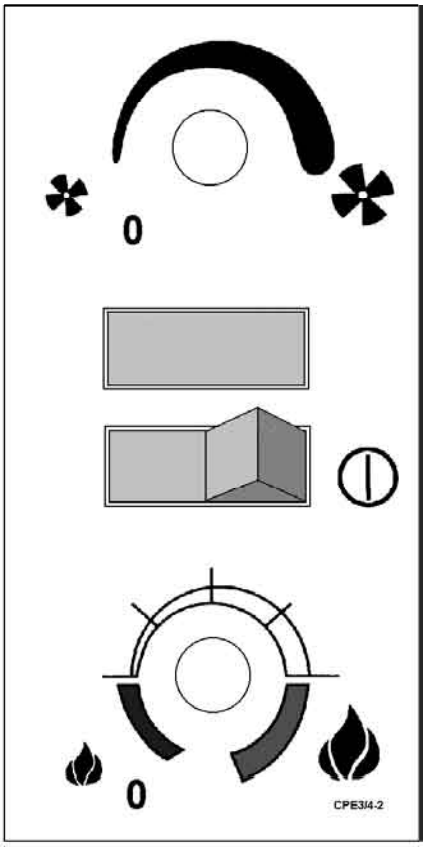

CONVECTION BLOWER SPEED CONTROL

AUGER LIGHT

START-UP SWITCH

DIAL-A-FIRE HEAT OUTPUT KNOB

6. Adjusting the blower speed control knob will vary the rate of airflow into the room by varying the speed of the convection blower.

***Note:** The convection blower may cycle to high automatically, depending on the setting of the controls. This is a normal safety feature of the unit.

TURNING OFF YOUR PELLET STOVE:

To turn your stove off, simply turn the HEAT OUTPUT knob (knob "B") counter-clockwise until the knob clicks to the "off" position. This will stop the feed of pellets. The blowers will continue to run and cool the stove. When cool enough the stove will shut down.

SPECIAL NOTES: The flashing green light corresponds to the auger feed rate.
The scale on the Dial A Fire knob represents a range, not exact times. Wood pellets of differing quality may affect the performance of the stove. If the stove has trouble operating at the ends of its' range, turn the heat output knob back slightly.

Operating Instructions

Control Board Functions:

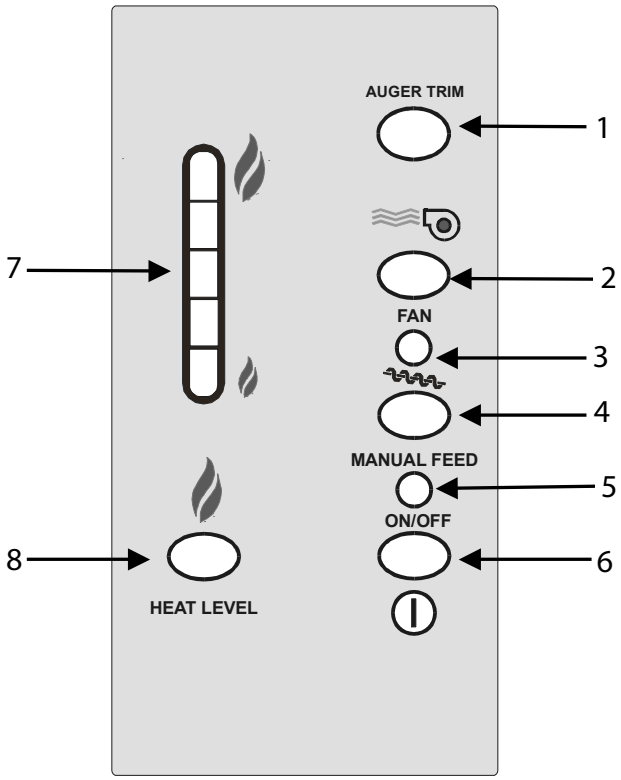

1. **AUGER TRIM:** Used to increase feed rates on LOW ONLY for poorer quality fuels. This button reduces or increases the ON time of the Auger pulse on low.

2. **CONVECTION BLOWER CONTROL:** Used to turn the convection blower off. Convection blower will automatically come on when the 160° F (71° C) sensor reaches this temperature to help cool the unit.

3. **AUGER PULSE LIGHT:** This light will flash in conjunction with the auger.

4. **MANUAL AUGER FEED:** If the unit runs out of fuel, this button can be used to "prime the auger system". This button will turn off after 60 seconds and then must be released and pressed again.

5. **SYSTEM LIGHT:** Responsible for signaling the state of the control board. If flashing, the board is under control. If the light is solid, setting can be altered.

6. **ON/OFF BUTTON:** Used to turn the unit ON and OFF.

7. **HEAT OUTPUT INDICATOR:** Shows the present heat output setting.

8. **HEAT LEVEL ADJUSTMENT:** When pressed, will change the heat setting of the unit from low to high.

Turning Pellet Stove On (Circuit Board):

WITHOUT THERMOSTAT:

Ensure the hopper has sufficient fuel or pellets to start the unit.

1. Press the ON / OFF button (6) to start the appliance. System light (5) will flash, auger light (3) will flash with the pulse of the auger, heat level indicator will show with no control until the system light becomes solid.

2. If this is the first time the unit has been started or the unit has run out of fuel, press the Manual Auger Feed button (4) and hold down for 60 seconds. This will help "prime the auger," deliver fuel to the burn pot, and help light the unit more quickly.

3. When a fire has been established, the system light will become solid and the auger light will continue to flash. The heat output button (8) can be pressed to achieve the desired heat setting.

4. The convection blower (room air blower) will be on, the speed of this blower is controlled by the setting set on the heat output indicator. The convection blower can be turned **OFF** by depressing the convection blower control button (2). When the unit reaches 160° F (71° C), the convection blower will come **ON,** cooling the unit. It is recommended that the convection blower be left on at all times.

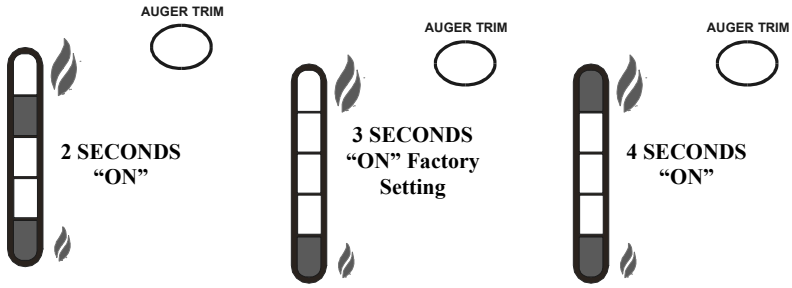

5. When the unit is operating on LOW the unit can be adjusted for poorer quality fuels. By depressing the Auger Trim button (1), WHEN THE UNIT IS ON LOW, the ON time the auger pulses can be changed from 2 seconds ON to 4 seconds ON.

These settings can be used if the unit does not keep a fire going on low (poor quality fuel). These settings could also be used if the low setting is too hot or cold for the surrounding area.

TURNING OFF YOUR PELLET STOVE:

To turn the unit OFF, simply press the ON / OFF button. All LED lights will go out. This will stop the feed of pellets. The blowers will continue to operate and cool the stove. When cool enough, the stove will shut down.

Slider/Damper Operation:

This is used to regulate the airflow through the pellet stove.

•On the low heat output settings, push the slider all the way in.

•On the high heat output pull the slider out or until a good fire is achieved. A good fire is in between a fire with lazy, flames black tipped flames and a forced fire (very quick, shorter flames). A good fire is the most efficient and will have a bright and active flame.

•Hot magnetic reading 0.10 – 0.

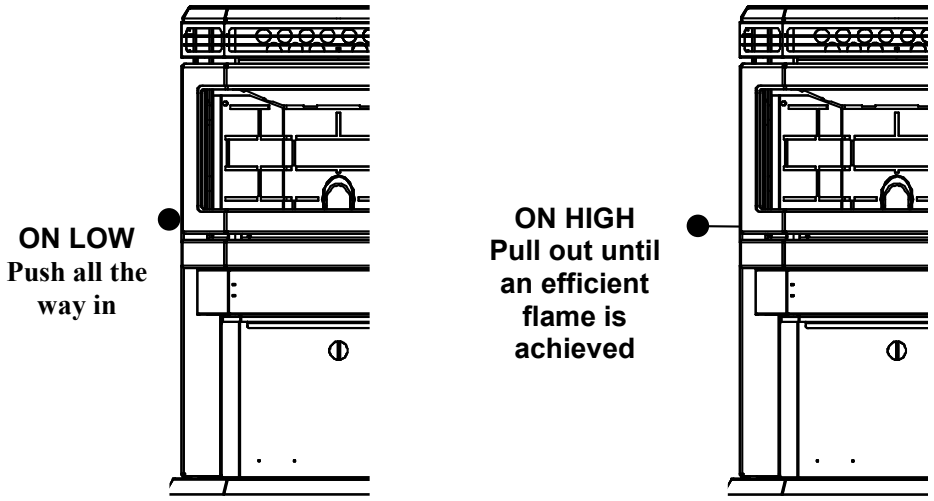

THE TUBE SCRAPER ROD:
Put the stainless steel rod through the hole in the heat exchanger, thread the rod into the scraper plate.

Operating Instructions

Routine Cleaning and Maintenance:

The following list of components should be inspected and maintained routinely to ensure that the appliance is operating at its' optimum and giving you excellent heat value:

2-3 DAYS/WEEKLY	SEASON or 2 TONS OF FUEL
Burn Pot and Liner	Exhaust Vent
Ash Pan	Fresh Air Intake Tube
Inside Firebox	Blower Mechanisms
Door Glass	Heat Exchanger Tubes
Heat Exchanger Tubes	Behind Firebox Liners
Ash Pan and Door Gaskets	All Hinges
Door Latch	Post-Season Clean-up

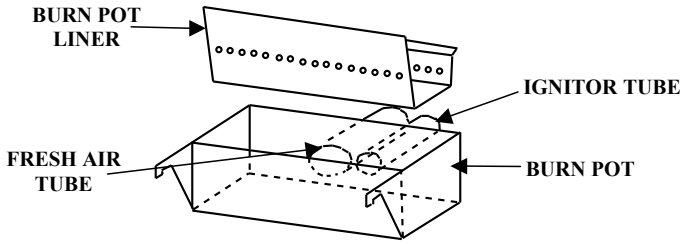

TOOLS REQUIRED TO CLEAN UNIT:
Torx T-20 Screwdriver, 5/16" wrench or socket, Brush, Soft Cloth, Vacuum with fine filter bag

ASH PAN AND DOOR GASKETS
After excessive use, the gasketing may come loose. To repair this, glue the gasketing on using high-temperature fiberglass gasket glue available from your local dealer. This is important to maintain an airtight assembly.
DO NOT PLACE UNBURNED OR RAW PELLET FUEL IN ASH PAN.

BURNER POT AND LINER
This is the 'pot' where the pellets are burned. Every two to three days (when the unit is cold), remove the burn-pot liner from the stove. Using a metal scrapper, remove material that has accumulated or is clogging the liner's holes. Then dispose of the scrapped ashes from the liner and from inside the burn-pot. Place the burn-pot back into the stove, making sure that the pipes are properly inserted into the burn pot. Place the liner back into the burn-pot, making sure that the ignitor hole in the liner is aligned with the ignitor tube. Push the liner up against the ignitor tube.

To remove the burn pot and burn pot liner, open the door using the door handle provided (located on the left-hand side of the stove). Swing the door open. Lift the liner from the burn pot. Lift the burn pot from the firebox by gently lifting up the front of the burn pot, then sliding the assembly from the air intake tube and the ignitor cartridge.

ASH REMOVAL:
CAUTION WHEN VACUUMING FLY ASH: BECAUSE THE FLY ASH IS VERY FINE, THE USE OF A FINE FILTER VACUUM BAG WILL BE REQUIRED TO PREVENT ASH FROM BEING BLOWN BACK INTO THE ROOM. Please pay special attention that there are no hot ashes in the firebox or there could be a possibility of a fire hazard inside the vacuum cleaner. Place all hot ashes into a noncombustible container.

FREESTANDING ASH PAN:
This part is located under the burner, in the pedestal, and has a latching mechanism to secure it. To remove the ash pan, unlock the latch on the pedestal cover and pull the pan out. Dump the ashes into a metal container stored away from combustibles. Monitor the ash level every week. Remember that different pellet fuels will have different ash contents. Ash content is a good indication of fuel efficiency and quality. Refer to "Warnings and Recommendations" for disposal of ashes.
DO NOT PLACE UNBURNED OR RAW PELLET FUEL IN ASH PAN

BLOWER MECHANISMS:
Unplug the stove then open the right/left side panels to access the two blowers. Only the convection blower motor (on the right side of the stove) will require lubrication. The convection motor has two lubrication holes on it. Use two drops of SAE 20, light oil to lubricate every six months. Excess oil may damage the motor. The

exhaust blower's motor has sealed bearings. DO NOT lubricate this motor.

DOOR GLASS

It is recommended that your dealer replace the glass if broken.

The door glass is made of 5 mm thick, high temperature PYROCERAMIC. The center panel is 229 mm x 330 mm. To replace the glass, unscrew and remove the four glass retainers. Remove the glass and any broken pieces. High temperature fiberglass tape should be used around the glass. Replace the glass, center the glass assembly in the frame, then screw the glass retainers back to the frame. The use of substitute materials is prohibited.

FRESH AIR INTAKE

Inspect periodically to be sure that it is not clogged with any foreign materials.

INSIDE FIREBOX

For bi-weekly clean out, ash may be removed from behind the steel plates by rotating the circular cover to allow vacuuming behind the plates.

EXHAUST PASSAGES

Removal of the firebox backing for bi-annual cleaning

- Remove the top baffler.
- Lubricate and then remove the 7 screws that hold the brick liner in place. Tilt the top of the brick panel towards the firebox opening and remove from the firebox.
- Remove the top rod by first removing the screw that holds it in place, then slide the rod sideways.
- Pull the side panels into the center of the firebox, then out.
- Pull the center panel out.
- Clean all passages thoroughly (vacuum recommended).

Installation of firebox backing:

- Install the side panels in place. Insert center panel, hold the panels in place
- Install the top rod by sliding it into one side panel then across into the other panel. Screw rod in place.
- Re-install steel brick liner and screw in place.
- Replace top baffle.

EXHAUST VENT

Soot and Flyash: Formation and Need for Removal - The products of combustion will contain small particles of flyash. The flyash will collect in the exhaust venting system and restrict the flow of the flue gases. Incomplete combustion, such as occurs during startup, shutdown, or incorrect operation of the room heater will lead to some soot formation which will collect in the exhaust venting system. The exhaust venting system should be inspected at least once every year or after two tons of pellets to determine if cleaning is necessary. We recommend contacting your dealer for professional cleaning. To remove dust from the vent pipe, tap lightly on the pipe to dislodge any loose ash. Open the bottom of the "T" to dump the ash, then vacuum as much of the ash out of the vent pipe as possible.

HEAT EXCHANGER TUBES

This cleaning rod is to be pulled back and forth a few times **(ONLY WHEN THE UNIT IS COLD)** in order to clean away any fly ash that may have collected on the heat exchanger tubes. As different types of pellets produce different amounts of ash, cleaning of the tubes should be done on a regular basis to enable the unit to run efficiently.

POST SEASON CLEAN-UP

Once you are finished using the pellet appliance for the season, unplug the stove for added electrical protection. It is very important that the stove be cleaned and serviced as stated above.

Warranty

Sherwood Industries Ltd. gives a five year limited warranty on all steel manufactured parts. A one-year warranty is provided on all electrical components. The above limited warranties are extended only to the original purchaser.

There is no warranty on the following parts:

- Fiberglass rope baskets
- refractory material
- burn pot liner
- paint
- enamel finish or gold plating where it applies
- vacuum hose.

****NOTE:** The paint on the brick firebox lining may peel. This is due to the extreme conditions applied to the paint and is in no way covered under warranty.

WHEN FILING A WARRANTY CLAIM PLEASE COMPLETE THE FOLLOWING INFORMATION ON AN OFFICIAL WARRANTY CLAIM FORM:

TO THE DEALER:

- Name, Address and Telephone Number of purchaser and date of purchase.
- Date of Installation. Name of the installer and dealer. Serial Number of the appliance. Nature of the complaint, defects or malfunction, description and part # of any parts replaced.

TO THE DISTRIBUTOR:

- Sign and verify that work and information are correct.

ENSURE THAT YOU SPECIFY THE NATURE OF THE COMPLAINT, DEFECT, PERIODICAL MALFUNCTION, ETC.

The limited warranty covers defects in materials and workmanship as long as the products have been installed according to the manual's instruction. If the product is damaged or broken as a result of mishandling or misuse, the warranty does not apply. Removal and re-installation costs are not covered under this warranty.

It is the manufacturer's option whether to repair or replace the appliance. The shipping cost to and from the factory is paid by the consumer. All warranties by the manufacturer are set forth herein and no claim shall be made against the manufacturer on any oral warranty or representation.

Sherwood Industries Ltd. assumes no responsibility for damage caused by household power fluctuations or power surges.

For the do-it-yourself individual

The consumer should be aware that the pellet appliance needs setting, using tools that he/she might not have. Consult an ENVIRO dealer. It is recommended than only an authorized ENVIRO dealer install an ENVIRO unit. There will be no warranty coverage on parts destroyed or burnt out as a result of a consumer installation error or defect.

Sherwood Industries Ltd. reserves the right to make changes without any notice.

Installation Data Sheet

The following information must be recorded by the installer for warranty purposes and future reference.

NAME OF OWNER:

_____

ADDRESS:

_____

_____

_____

PHONE:_____

NAME OF DEALER:

_____

ADDRESS:

_____

_____

_____

PHONE:_____

MODEL:_____

SERIAL NUMBER:_____

DATE OF PURCHASE: _____ (dd/mm/yyyy)

DATE OF INSTALLATION:_____(dd/mm/yyyy)

MAGNEHELIC AT INSTALL:_____

INSTALLER'S SIGNATURE:

_____

NAME OF INSTALLER:

_____

ADDRESS:

_____

_____

_____

PHONE:_____

MANUFACTURED BY:
SHERWOOD INDUSTRIES LTD.
6782 OLDFIELD RD. SAANICHTON, BC, CANADA V8M 2A3
www.envirofire.biz
August 13, 2003
C-10068