SHERWOOD INDUSTRIES IS AN ENVIRONMENTALLY RESPONSIBLE COMPANY. THIS MANUAL IS PRINTED ON RECYCLED PAPER.

PLEASE KEEP THESE INSTRUCTIONS FOR FUTURE REFERENCE

Enviro

WOOD STOVE

The Hudson

OWNER'S MANUAL



Contact your local building or fire officials, or the authority having jurisdiction about restrictions and installation inspection requirements in your area.

PLEASE READ THIS ENTIRE MANUAL BEFORE INSTALLATION AND USE OF THIS WOOD BURNING ROOM HEATER. FAILURE TO FOLLOW THESE INSTRUCTIONS COULD RESULT IN PROPERTY DAMAGE, BODILY INJURY OR EVEN DEATH

Tested & Listed By OMNI-Test Laboratories, Inc. Beaverton Oregon USA

This heater meets the U. S. Environmental Protection Agencies emission limits for wood heaters sold after July 1st, 1988. Under specific conditions this heater has been shown to deliver heat at rates ranging from 11,094 BTU's to 31,351 BTU's per hour.

50-809

Table of Contents

Safety Precautions.....3
Dimensions.....4
Clearances To Combustibles.....4
Clearances to Walls.....5
Stove Features.....6
Stove Parts List.....6
Stove Assembly.....7
Preparation for Installation.....7
Chimney Installation.....8
Chimney Installation Through Wall.....10
Lighting and Operation of Stove.....11
Maintenance.....15
Warranty.....16
Installation Data Sheet.....17

Safety Precautions

1. Please read this entire manual before you install and use your new heater. Failure to follow these instructions may result in property damage, personal injury, and even death.

2. HOT WHILE IN OPERATION. KEEP CHILDREN, PETS, CLOTHING, WOOD, PAPER, FURNITURE, DRAPES, OR ANY OTHER COMBUSTIBLE MATERIALS AWAY FROM STOVE. CONTACT MAY CAUSE SKIN BURNS.

3. If you plan to use an existing chimney with your stove, inspect it thoroughly to make sure that it is sound and clean. Advise your insurance company to be sure that your policy covers a woodstove.

4. Do not install in a mobile home.

5. Do not connect to any air distribution duct or system.

6. If this appliance is not properly installed, operated and maintained, a serious house fire could result. Do not use any makeshift materials during installation.

7. Use smoke detectors near the stove as well as other areas of the home.

8. Never use gasoline, gasoline-type lantern fuel, kerosene, charcoal lighter fluid, or similar liquids to start or "freshen up" a fire in this heater. Keep all such liquids well away from heater while it is in use.

9. Periodically inspect the chimney for deterioration and creosote buildup. Clean it regularly to reduce the chances of a chimney fire.

10. Keep a fire extinguisher rated for "Class A" fires near the stove. The dry chemical type is recommended, as liquid types can create steam if sprayed into a hot stove. BE SURE EVERY MEMBER OF THE FAMILY KNOWS WHERE THE EXTINGUISHER IS AND HOW TO USE IT!

11. Use of a chimney cap with an approved spark arrester is recommended. NOTE: Some building and fire codes require the use of spark arrestors.

12. Use caution when loading or working around the stove to prevent burns.

13. Do not use grates, andirons or any other methods to support or raise the fire up off the hearth of the appliance.

14. Operate only with the door closed and burn wood directly on the stove floor. Do not operate if the door glass is broken or a gasket is missing or damaged. Do not alter the combustion air control valves. Dangerous overfiring could occur which could ignite creosote in the chimney or cause a house fire.

15. Do not burn coal or charcoal, as there is danger of carbon monoxide being produced. Do not use chemical fluids to start or re-fresh the fire. Do not burn garbage or flammable fluids such as gasoline, grease, naphtha, or engine oil. Never let the stove become hot enough to get any part red or glowing red.

16. Burning wet unseasoned wood could cause excessive creosote accumulation. When ignited it could cause a chimney fire that could result in a serious house fire.

WARNING: THE INSTALLATION OF THIS STOVE MUST COMPLY WITH STATE AND LOCAL REQUIREMENTS AND BE INSPECTED BY THE STATE OR LOCAL BUILDING INSPECTOR IF REQUIRED.

Dimensions

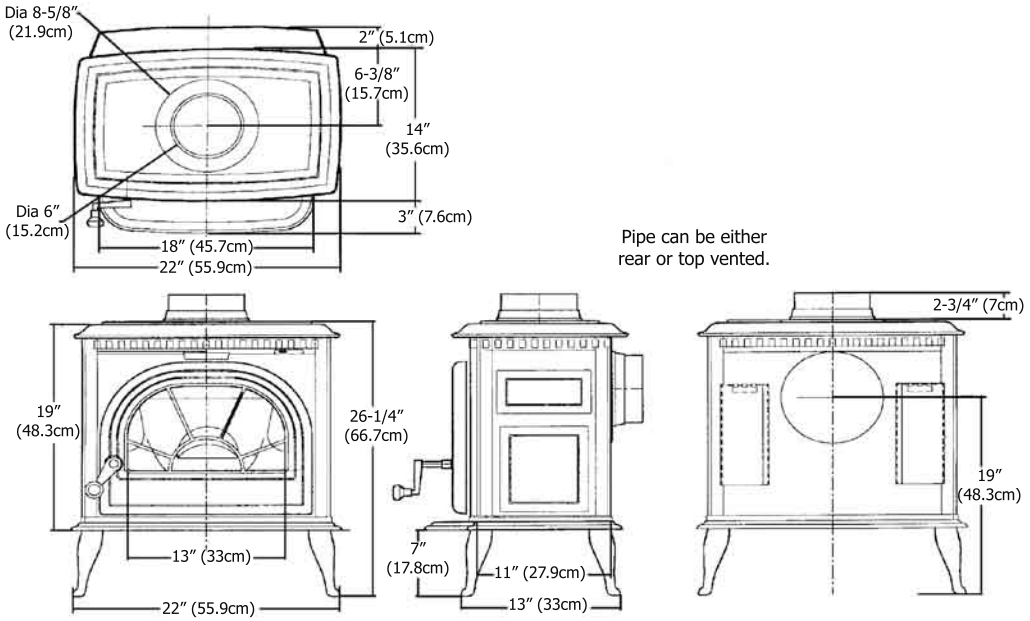

Clearances To Combustibles

NOTE: Walls or wood frame construction covered with non-combustible veneer such as brick are considered to be COMBUSTIBLE walls.

The Hudson stove must be installed with adequate clearance from combustible surfaces to ensure safe operation. Clearances may only be reduced by means approved by the regulatory authority.

Rear and side wall clearances depend on two factors:
1. Composition of the wall structure (combustible or non-combustible materials).
2. Type of stovepipe used to connect the stove to chimney or flue (single wall or double wall, insulated pipe)

(a) If the stove is installed on a combustible floor, a protective pad of ⅜" (1cm) fireproof millboard or equivalent must be placed beneath the pedestal. In USA the floor protection must extend 8" (20.3cm) to either side of the stove, and 16" (40.6cm) in front of the door opening. In Canada the floor protection must extend 8" (20.3cm) to either side of the stove, 8" (20.3cm) to the rear, and 18" (43.1cm) in front of the door opening. The floor under the chimney connector must be covered by floor protection as well as a minimum area of 2" (50.8mm) beyond each side.

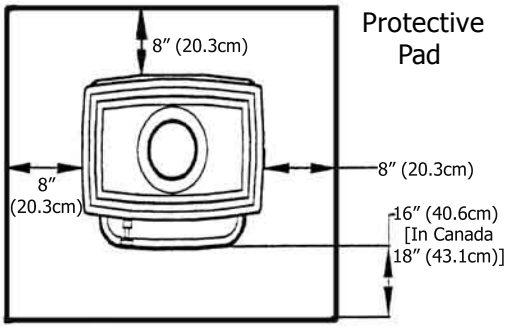

(b) If the stove pipe is installed with an elbow to penetrate the wall into a flue, the minimum clearance from the top of the stove connector pipe and the ceiling is 18" (45.7cm).

RESIDENTIAL CLEARANCE DIMENSIONS:

Combustible Wall-Single Wall Pipe	15" (38.1cm)
*Non-Combustible Wall-Single Wall Pipe	12" (30.5cm)

*Solid cement or solid brick without combustible construction behind.
*A chimney connector shall not pass through an attic or roof space, closet or similar concealed space, or a floor or ceiling.
*Where passage through a wall or partition of combustible construction is desired, the installation shall conform to CAN/CSA-B365.

Clearances to Walls

The stove legs must be in place to assure proper floor clearances

In Canada: Clearance to back wall -from unit 14-1/2" (36.8cm)
-from connector pipe 20" (50.8cm)

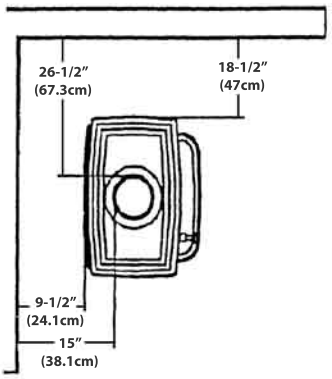

Parallel installation, single wall connector, top vent.

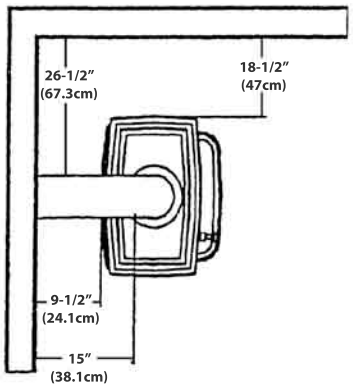

Parallel installation, single wall connector, top venting through wall.

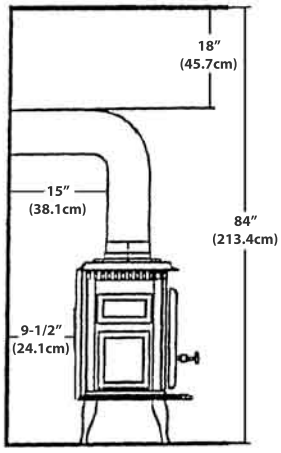

Parallel installation, single wall connector, top vent to rear through the wall.

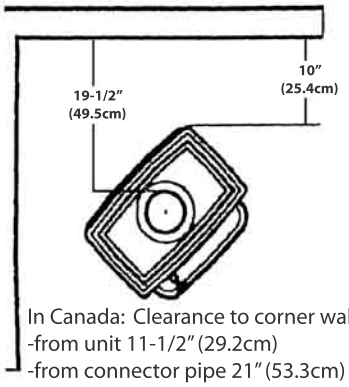

In Canada: Clearance to corner wall
-from unit 11-1/2" (29.2cm)
-from connector pipe 21" (53.3cm)

Corner installation, single wall connector, top vent.

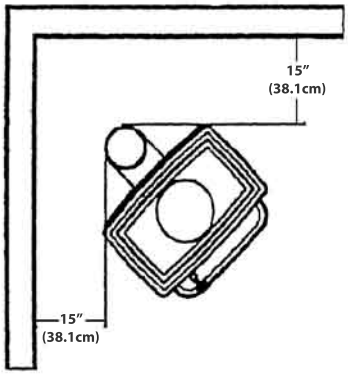

Corner installation, single wall connector, rear vent to vertical connector.

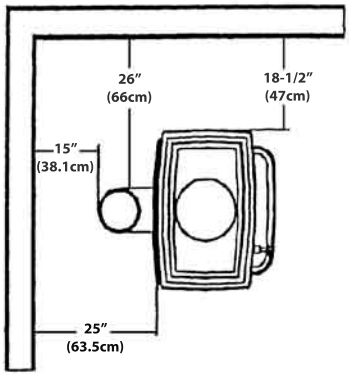

Parallel installation, single wall connector, rear vent to vertical connector.

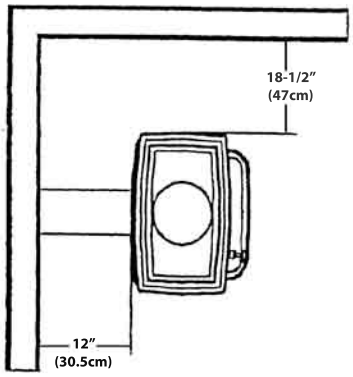

Parallel installation, single wall connector, rear vent.

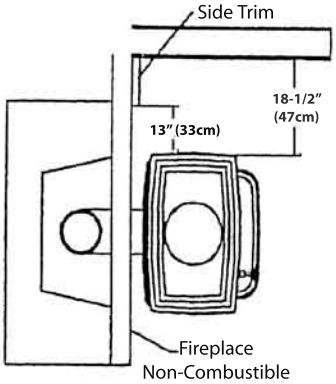

Non-combustible fireplace parallel installation, single wall connector in chimney.

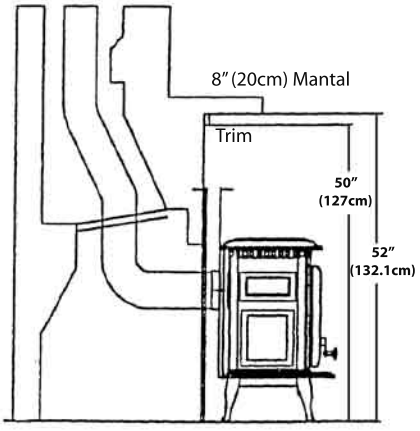

Non-combustible fireplace installation.

HEARTH MOUNT

Stove Features

Before attempting to install or operate your stove, please take a few moments to familiarize yourself with these features and operating controls.

1. QUALITY CAST CONSTRUCTION assures you of years of dependable service. The firebox is constructed of durable cast iron and manufactured for years of use. Excellent for retaining heat and radiance into the home for a longer period of time.

2. DOUBLE CAST IRON LINER boosts burning efficiency by reflecting radiant heat back into the fire. This results in a cleaner, more efficient burn.

3. ONE PIECE FULL VIEW GLASS DOOR seals the firebox for high efficiency and allows you to see the beauty of the fire.

4. SECONDARY AIR CHAMBER constructed of stainless steel designed for excellent burn pattern.

5. FRONT DOOR LATCH: Never operate the door handle without using a protective glove to prevent burning your hand. To open the door, turn the latch a quarter turn clockwise.

6. PRIMARY AIR CONTROL Sliding the control to the right increases the air and thus the heat output. Sliding it to the left slows down the burn.

7. FLUE CONNECTOR For top or rear mounted six-inch connection.

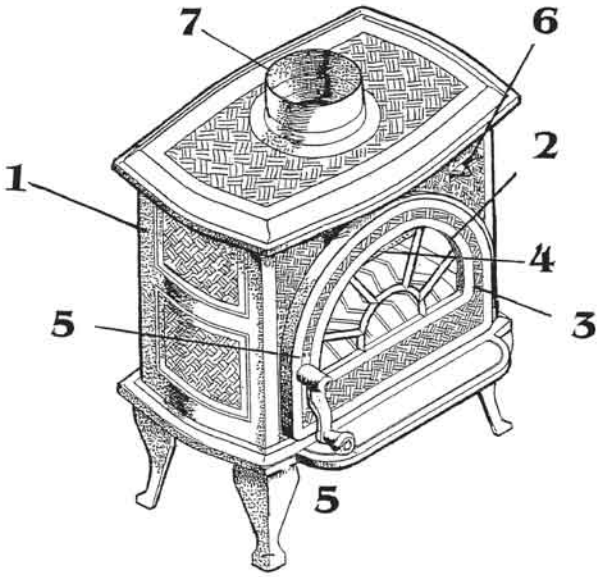

Stove Parts List

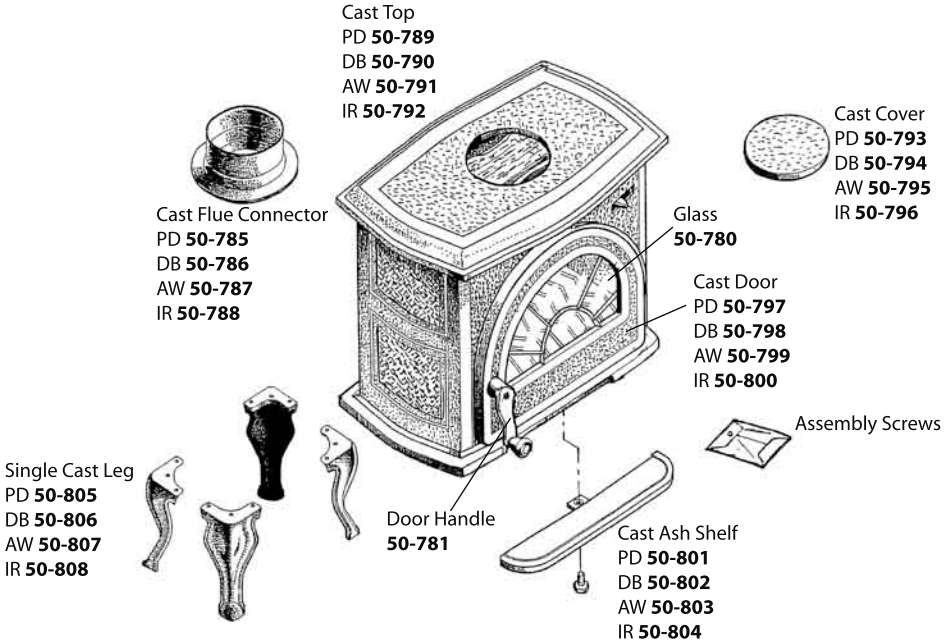

Not Shown:

Firebox Blanket
50-783

Firebox Liner - Painted Black
50-782

Grate - Painted Black
50-784

Owner's Manual
50-809

PD - Painted Black
DB - Diamond Black
AW - Antique White
IR - Inferno Red

Stove Assembly

Remove top and sides of crate from around Hudson. The ash lip will be found in a box under the cast top, leave cast top removed while assembly. The grate in the door way must be remove to take the box, containing the four legs, the handle and assembly metric fasteners, out of the firebox.

To remove stove from pallet lay Hudson gently on its' back and remove the four 10mm bolt from the bottom of the pallet. The stove must remain on its' back to install the ash lip, all four legs, and bottom heat shield. Carefully turn the stove upright, replace the cast top and install the door handle. The Hudson must have the door handle, heat shields, all four legs, ash lip, and flue collar installed before it can be used.

ASH LIP:

Secure the ash lip in place by tightening the 10mm bolts with washers into the two holes underneath the door.

LEG KIT:

There are four holes tapped in the bottom of the stove that will line up the legs properly. Thread a 12mm bolt with washer ¼" (6mm) into each hole. Hook the leg around the bolt, line up the corner of the leg with the 'V' in the bottom corners of the cast, and tighten bolt.

BOTTOM HEAT SHIELD:

1. The heat shield should be spaced approximately 2" (5cm) from the bottom of the stove. You should have two spacer screws, two washers, and two extension screws.
2. The two spacer screws should be attached to the stove bottom first.
3. Line up the holes in the heat shield to the spacer screws (these may need to be straighten in order to install the heat shield). The lip on the heat shield will face upward at the front.
4. Screw the extension screws into the spacer screws.

IMPORTANT: The shield must be in place to assure proper floor clearances.

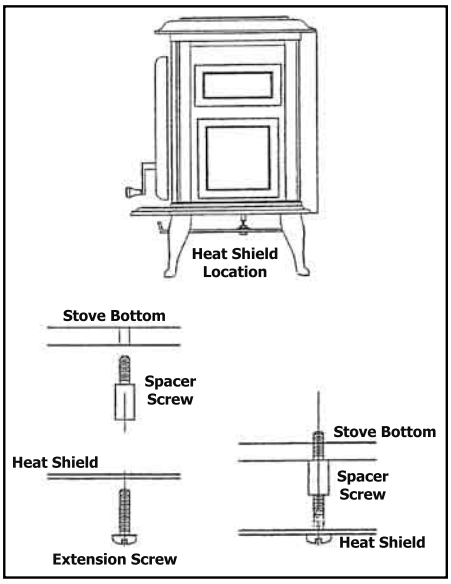

DOOR HANDLE:

See Figure to right.

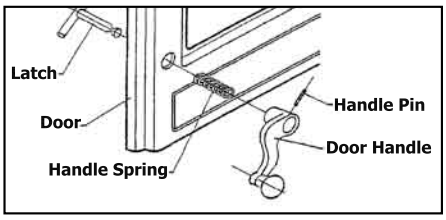

FLUE COLLAR:

The flue collar is initially mounted to the back but if the stove will be installed with top venting the flue collar will have to be moved. Remove the back heat shield using a 8mm wrench and remove cast top and lay it upside down. Using a 10mm wrench remove to one bolt holding the cast cover to the top and the three bolts holding the flue collar to the back of the stove (inner side of back, acsess through top). Install the cover onto the back and the flue collar onto the top. Replace the cast top and the back heat shield.

Preparation for Installation

WARNING: When this room heater is not properly installed, a house fire may result. To reduce the risk of fire, follow the installation instructions. Contact local building or fire officials about restrictions and installation inspection requirements in your area.

WARNING: This room heater must be connected to:

1) A chimney complying with the requirements for type HT chimneys in the standard for Chimneys, Factory-Built, Residential Type and Building Heating Appliance. UL 103 (S629 in Canada) or
2) A code-approved masonry chimney with a flue liner; 6" (15.2cm) minimum flue.

Proper preparation and planning of the installation will simplify the job and help achieve effective operation of the unit.

a) Select the location of the stove installation. The stove should be positioned so that the air flows to the rest of the home in as straight a line as possible.
b) Indicate the proper penetration point of the chimney structure. Avoid roof areas such as valleys, ridges, dormers, and hips.
c) Position the floor protector where the installation is to be made (See Clearance to Combustibles and Clearances to Walls).

Chimney Installation

All configurations on this page are only to be used as a guideline. Please refer to pipe manufacturer's installation instructions and local building codes before installing any heating appliance.

IMPORTANT: DO NOT ATTACH THIS UNIT TO A CHIMNEY FLUE SERVING ANOTHER APPLIANCE.

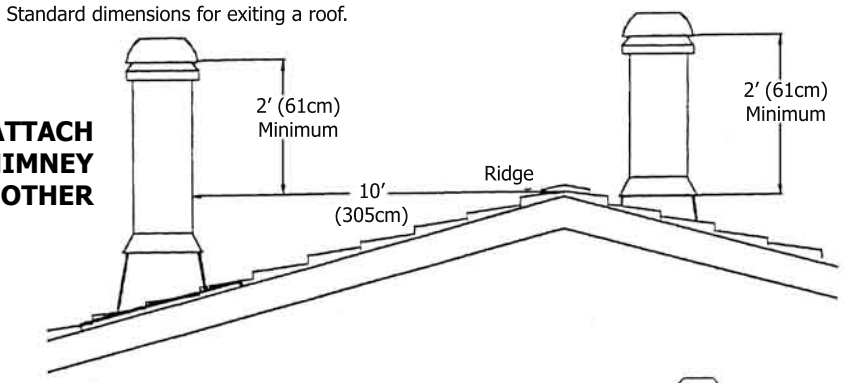

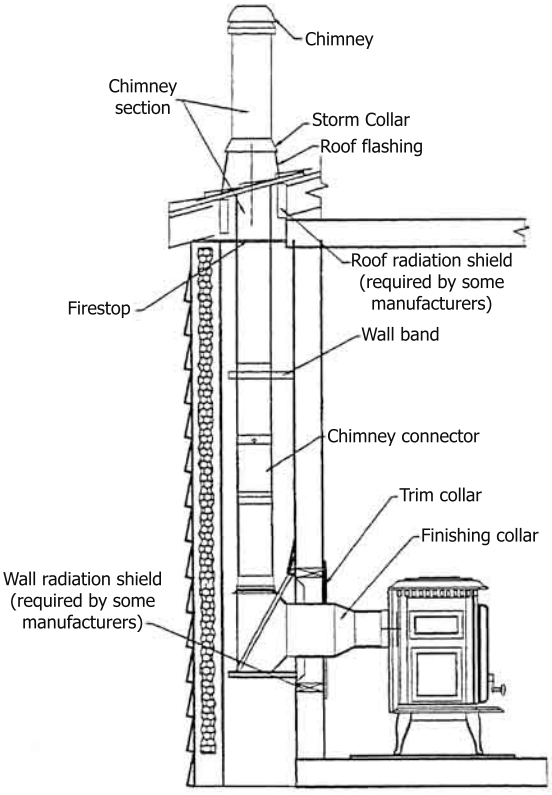

Through the wall installation - factory built chimney.

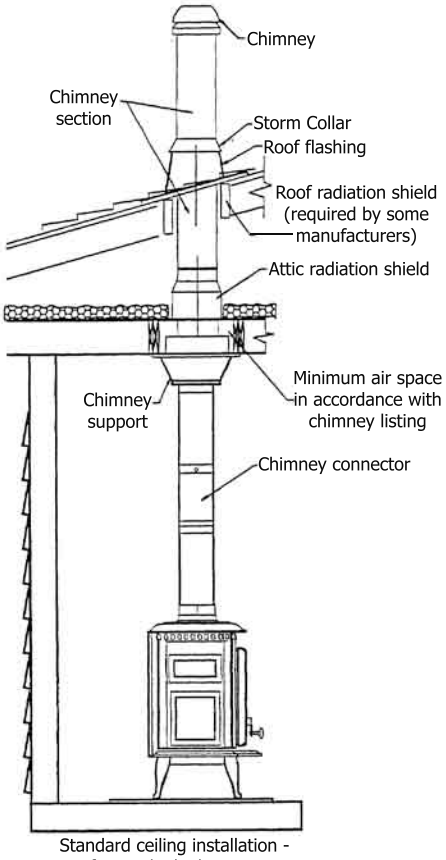

Standard ceiling installation - factory built chimney.

1. GENERAL

a) The single wall stove pipe used to connect the stove to the flue, whether masonry or factory built, must be a minimum of 24 gauge, blue or black steel. The pipe is to be a minimum 6" (15cm) inside diameter. CAUTION: DO NOT USE GALVANIZED PIPE.

b) Secure the first section of the pipe to the top of the cast adaptor. The pipe should be inserted into the cast piece at least ¾" (2cm) for safety.

c) Secure every pipe joint with three or more sheet metal screws to prevent accidental separation.

d) If an elbow is installed, the horizontal section of the stove pipe should slope ¼" per foot to run toward the stove to allow creosote to drip into the firebox and burn.

e) Always install the single wall stovepipe with the male (crimped) end down to prevent leakage of creosote or moisture.

2. INSTALLATION INTO MASONRY FLUE

a) Masonry flues for use with solid fuel appliances must meet the NATIONAL FIRE PROTECTION ASSOCIATIONS CODE 211 specifications for a code-approved masonry chimney with a flue liner.

b) Connection to the masonry flue is made with a masonry or terra-cotta type thimble cemented firmly in place.

c) Material around the thimble connection must provide adequate protection from fire. Use either 12" of solid masonry or an approved insulated connector.

d) Stove pipe should be inserted far enough into the thimble to assure good connection but must not extend past the flue lining.

e) Recheck all clearances.

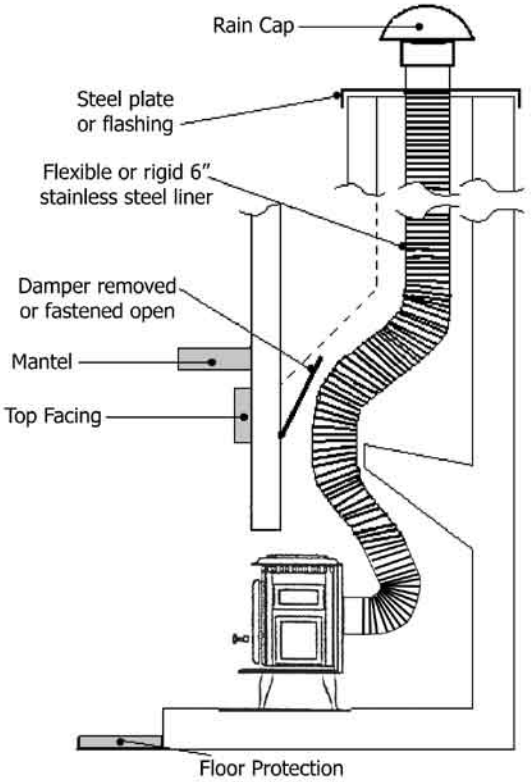

3. INSTALLATION INTO A FACTORY-BUILT CHIMNEY

a) After the stove is positioned, suspend a plumb bob over the center of the damper opening to determine the chimney penetration point.

b) The Hudson pipe can be single or double wall up the all-fuel burning heating appliance factory-built chimney. CAUTION: SOME CHIMNEYS ARE AVAILABLE WITH UL LISTING, WHICH ARE NOT CLASS "HT", AND ARE NOT SAFE WITH A SOLID FUEL APPLIANCE.

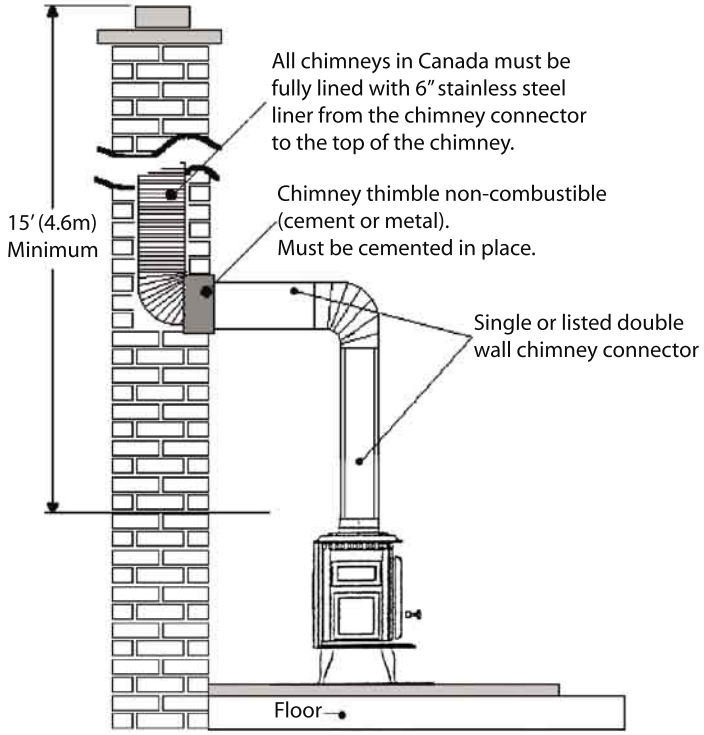

c) Install the chimney following the manufacturer's instructions exactly. **DO NOT DEVIATE FROM THESE INSTRUCTIONS!**

d) The chimney should extend a minimum of 3 feet (91cm) from the roof structure or 2 feet (61cm) higher than the highest point within 10 feet (3.05m), whichever is greater. This assures proper chimney function and reduces the possibility of backdrafts.

NOTE: All installations must meet local building and fire codes. Check with your local building officials for assistance in getting permits, inspections, and good advice.

NOTE: Use of aluminum type B gas vent for solid fuels is unsafe and prohibited by the National Fire Protection Association Code.

Chimney Installation Through Wall

Here are four methods combustible wall chimney connector pass-throughs. Information was provided from NFPA 211.

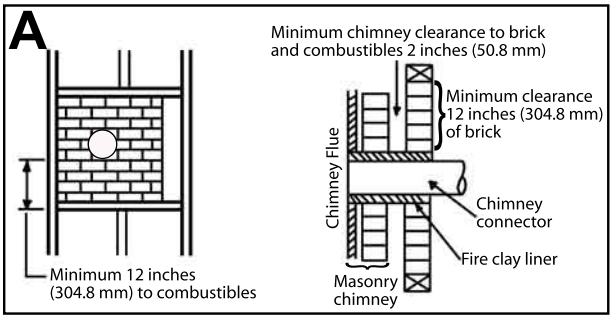

Method A. 12" (304.8mm) Clearance to Combustible Wall Member: Using a minimum thickness 3.5" (89mm) brick and a ⅝" (15.9mm) minimum wall thickness clay liner, construct a wall pass-through. The clay liner must conform to ASTM C315 (Standard Specification for Clay Fire Linings) or its equivalent. Keep a minimum of 12" (304.8mm) of brick masonry between the clay liner and wall combustibles. The clay liner shall run from the brick masonry outer surface to the inner surface of the chimney flue liner but not past the inner surface. Firmly grout or cement the clay liner in place to the chimney flue liner.

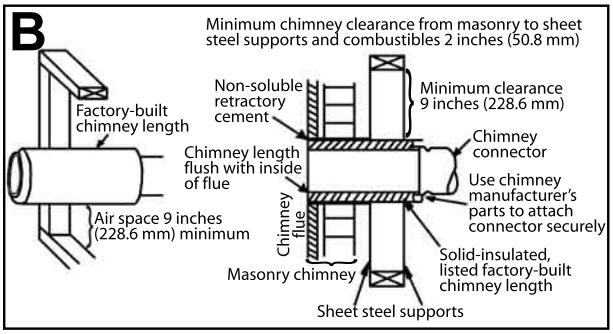

Method B. 9" (228.6mm) Clearance to Combustible Wall Member: Using a 6" (152.4mm) inside diameter, factory-built Solid-Pak chimney section with insulation of 1" (25.4mm) or more, build a wall pass-through with a minimum 9" (228.6mm) air space between the outer wall of the chimney length and wall combustibles. Use sheet metal supports fastened securely to wall surfaces on all sides, to maintain the 9" (228.6mm) air space. When fastening supports to chimney length, do not penetrate the chimney liner (the inside wall of the Solid-Pak chimney). The inner end of the Solid-Pak chimney section shall be flush with the inside of the masonry chimney flue, and sealed with a non-water soluble refractory cement. Use this cement to also seal to the brick masonry penetration.

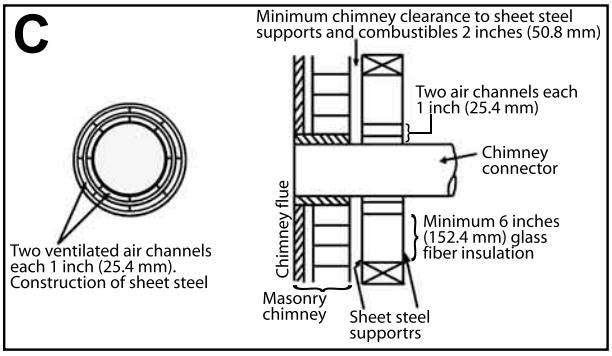

Method C. 6" (152.4mm) Clearance to Combustible Wall Member: Starting with a minimum 24 gauge (.024" [0.61mm]) 6" (152.4mm) metal chimney connector, and a minimum 24 gauge ventilated wall thimble which has two air channels of 1" (25.4mm) each, construct a wall pass-through. There shall be a minimum 6" (152.4mm) separation area containing fiberglass insulation, from the outer surface of the wall thimble to wall combustibles. Support the wall thimble, and cover its opening with a 24 gauge minimum sheet metal support. Maintain the 6" (152.4mm) space. There should also be a support sized to fit and hold the metal chimney connector. See that the supports are fastened securely to wall surfaces on all sides. Make sure fasteners used to secure the metal chimney connector do not penetrate chimney flue liner.

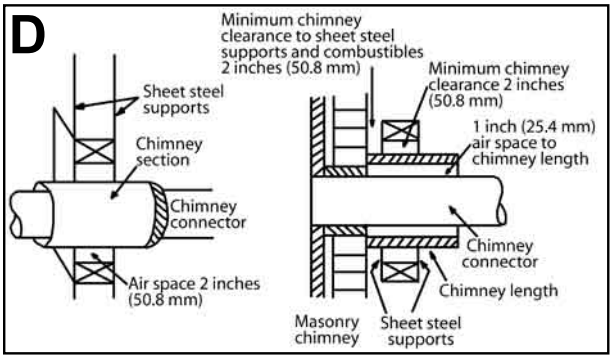

Method D. 2" (50.8mm) Clearance to Combustible Wall Member: Start with a solid-pak listed factory built chimney section at least 12" (304mm) long, with insulation of 1" (25.4mm) or more, and an inside diameter of 8" (2" [51mm] larger than the 6" [152.4mm] chimney connector). Use this as a pass-through for a minimum 24 gauge single wall steel chimney connector. Keep solid-pak section concentric with and spaced 1" (25.4mm) off the chimney connector by way of sheet metal support plates at both ends of chimney section. Cover opening with and support chimney section on both sides with 24 gauge minimum sheet metal supports. See that the supports are fastened securely to wall surfaces on all sides. Make sure fasteners used to secure chimney flue liner.

NOTES:

1. Connectors to a masonry chimney, excepting method B, shall extend in one continuous section through the wall pass-through system and the chimney wall, to but not past the inner flue liner face.
2. A chimney connector shall not pass through an attic or roof space, closet or similar concealed space, or a floor, or ceiling.

Lighting and Operation of Stove

Proper operation of your Hudson stove will help to ensure safe, efficient heating. Please take a few moments to review these simple operating procedures.

1. Fuel Selection:

The Hudson is designed to burn natural wood only. Higher efficiencies and lower emissions generally result when burning air-dried seasoned hardwoods, as compared to softwoods or to green or freshly cut hardwoods. DO NOT BURN the following: treated wood, coal, garbage, solvents, colored papers, or trash. Burning these may result in the release of toxic fumes and may poison or render the catalytics ineffective. Burning coal, cardboard, or loose paper can produce soot, or large flakes of char or fly ash that can coat the combustor, causing smoke spillage into the room, and rendering the combustor ineffective.

2. Building/Maintaining a Fire:

a) Open the primary air slide by pulling it all the way to the right.

b) Place a base of crumpled uncolored newspaper in the bottom of the stove. Lay pieces of kindling on top of the newspaper and light it.

CAUTION: "Never use gasoline, gasoline-type lantern fuel, kerosene, charcoal lighter fluid, or similar liquids to start or "freshen up" a fire in this heater. Keep all such liquids well away from heater while it is in use.

c) As the kindling begins to burn, add several larger pieces of wood until the fire is burning well. At this point, regular size logs may be added.
NOTE: Until the fire is burning well, leave the draft controls fully open.

d) Regulate the heat output of the stove by adjusting the draft controls to allow a larger fire and vice versa. A short period of experimentation with the control settings will allow you to regulate the heat output to keep your home comfortable.
Do not use a grate or elevate the fire. Build wood fire on the stove firebox hearth floor.

3. Refueling the Stove:

Use a long pair of gloves (barbecue gloves) when feeding the fire because these stoves burn at the front they are clean and efficient, but they are also very hot and gloves are useful. Keep a small steel shovel and whisk nearby for moving a log or lifting a fallen ember and for keeping the hearth clean.

a) Before attempting to add fuel to the stove, OPEN the damper control fully by pulling it all the way out. This allows the chimney to carry away the additional smoke, which occurs when the door is open.

b) **DO NOT OVERLOAD THE STOVE.** Normally, three or four logs will provide heat for several hours. Never operate this stove where portions glow red hot.

c) **DO NOT OVERFIRE**. If the heater or chimney connector glows, you are overfiring.

d) **CAUTION:** DO NOT PLACE SUCH FUEL WITHIN SPACE HEATER INSTALLATION CLEARANCES OR WITHIN THE SPACE REQUIRED FOR CHARGING AND ASH REMOVAL.

4. For Maximum Efficiency:

When the stove is hot, load it fully to the top of the door opening, and burn at medium low settings. When the fuel is mostly consumed, leaving a bed of red coals, repeat the process. Maximum heat for minimum fuel occurs

when the stovetop temperature is between 250°F (120°C) and 550°F (290°C). The most likely causes of dirty glass are: not enough fuel to get the stove thoroughly hot, burning green or wet wood, closing the draft until there is insufficient air for complete combustion, or a weak chimney draw. Indeed, the cleanness of the glass is a good indicator of the stove operating efficiently.

Helpful Hints Worth Repeating

1. Helpful advice on the correct way to start your fire.

a) You will need small pieces of dry wood, called kindling, and paper. Use only newspaper or paper that has not been coated or had other materials glued or applied to it. Never use coated (typically advertising flyers) or coloured paper.

b) Always open the door of the wood stove slowly to prevent suction and drawing smoke into the room.

c) Crumple several pieces of paper and place them in the center of the firebox and directly onto the firebricks of the wood stove (see product information supplied with your stove). Never use a grate to elevate the fire.

d) Place small pieces of dry wood (kindling) over the paper in a "teepee" manner. This allows for good air circulation, which is critical for good combustion.

e) Light the crumpled paper in 2 or 3 locations. Note: It is important to heat the air in the stovepipe for draft to start.

f) Fully open the air controls of the wood stove (see the owner's manual supplied with your stove) and close the door until it is slightly open, allowing for much needed air to be introduced into the firebox. Never leave the door fully open, as sparks from the kindling may fly out of the stove, causing damage or injury. As the fire begins to burn the kindling, some additional kindling may be needed to sustain the fire. DO NOT add more paper after the fire has started.

g) Once the kindling has started to burn, add some smaller pieces of seasoned, dry firewood. Note: Adding large pieces at the early stages will only serve to smother the fire. Continue adding small pieces of seasoned dry firewood, keeping the door slightly open until each piece starts to ignite. Remember to always open the door slowly between placing wood into the fire.

h) Once the wood has started to ignite and the smoke has reduced, close the wood stove door fully. The reduction of smoke is a good indication that the draft in the chimney has started and good combustion is now possible. Larger pieces of seasoned, dry firewood can now be added when there is sufficient space in the firebox. Adjust the air control setting to desired setting (see the owner's manual supplied with your stove). Note: The lower the air control setting, the longer the burn time of your firewood.

2. What type of wood is best to use as firewood?

Dry, seasoned wood should be used. Do not use green, unseasoned wood. Green wood, besides burning at only 60% of the fuel value of dry, seasoned wood, will deposit creosote on the inside of your stove and along the inside of your chimney. Freshly cut wood has about 50% moisture. A 10 pound log contains 5 pounds of water. Both hardwood and softwood burn well in this stove. Both woods contain about 8,000 BTU's per pound, but hardwood is generally denser, will weigh more per cord, and burns a little slower and longer. Burn beach wood only if its' salt content has been washed away in a season of rain and then the wood dried.

3. What does dry, seasoned wood mean?

Wood that has been dried for a period of one year in a well-ventilated and sheltered area would be considered dry, seasoned wood. Wood from slow-growing trees is generally considered better than wood from fast-growing trees. To season firewood split and stack it so that air can get to all parts of the wood. Cutting firewood so that it will fit vertically, front to back, makes it easier loading and less likely for the fuel to roll on the glass.

4. Will following the above-listed steps for starting a fire mean perfect results every time?

The quick answer is ' most of the time'. There are many variables that may affect your success when starting a fire. Most of those variables and how to deal with them will be learned through experience. Your ability to start a good fire will significantly increase with time and patience. Some of the reasons for poor stove performance will be covered in the next section of these instructions.

5. Why can't I get the fire lit?

Damp or wet wood and poor draft are the main reasons for poor results in starting a fire. Always use dry, seasoned wood for your fire. Even wood dried for two years will be difficult to ignite if it has become wet.

6. Is it normal for soot to cover the glass at the beginning of a fire?

Your stove has been built with an air-wash system that will help keep the glass clear when the firebox has reached a good operating temperature and has a good draft. Cold firebox temperature and poor draft cause sooting of the glass. Once the firebox temperature and the draft increase, the soot will burn off.

7. What is draft?

Draft is the ability of the chimney to exhaust or draw smoke produced during the normal combustion process. Too much draft may cause excessive temperatures in the appliance and may damage the appliance*. Inadequate draft may cause backpuffing or "plugging" of the chimney. There is a certain amount of draft that is required to allow for your stove to function at its' highest efficiency. A water column gauge can be used to reference this amount.

8. What can cause a poor draft?

The most common factors for poor draft are:

a) Air supply
b) Environmental conditions
c) Cold chimney temperature
d) Poor chimney installation and maintenance
e) Atmospheric pressure

a) Air supply –
Inside the home, normal household appliances such as clothes dryers and forced-air furnaces compete for air, resulting in air starvation to the fire. This creates a condition in the house known as negative pressure. When a house experiences negative pressure, the combustion gases can be drawn from the chimney and into the house. This condition is commonly referred to as down-drafting. Increased amounts of insulation, vinyl windows, extra caulking in various places and door seals can all keep heat in but may also make a home too airtight. An easy way to stop negative pressure in a home is to crack a window in the room containing the stove.

b) Environmental Conditions -
High trees, low-lying house location such as in a valley, tall buildings or structures surrounding your house and windy conditions can cause poor draft or down-drafting.

c) Cold Chimney Temperature -
Avoid cold chimney temperatures by burning a hot fire for the first fifteen to forty minutes, being careful not to over-fire the stove. If any part of the chimney or parts of the stove start to glow, you are over-firing the stove. Where possible, install a temperature gauge on the chimney so temperature drops can be seen.

d) Chimney Installation and Maintenance -
Avoid using too many elbows or long horizontal runs or height of your chimney. If in doubt, contact a chimney expert and/or chimney manufacturer for help. Clean chimney, rain caps and especially spark arrestor regularly, to prevent creosote build-up, which will significantly reduce chimney draw and possibly a chimney fire.

9. Should I close or open the air control fully when shutting down the stove?

When shutting down the stove, fully open the air control. This allows the chimney temperatures to remain as high as possible for as long as possible. Cold chimney temperatures create creosote.

Note: These instructions are intended as an aid and do not supercede any local, provincial or state requirements. Check with officials or authorities having jurisdiction in your area.

Maintenance

There are several areas of the stove and chimney system that will need periodic maintenance to ensure safe and efficient operation.

NOTE: DO NOT OVERFIRE THIS HEATER

Attempts to achieve heat output rates that exceed heater design specifications can result in permanent damage to the heater.

DISPOSAL OF ASHES

Whenever ashes get 3 to 4 inches deep in your firebox and the stove is cooled, carefully rake the ashes out into a hearth shovel. Ashes should be placed in a metal container with a tight fitting lid. The closed container of ashes should be placed on a noncombustible floor or on the ground, away from all combustible materials pending final disposal. If the ashes are disposed of by burial in soil or otherwise locally dispersed they should be retained in the closed container until all cinders have thoroughly cooled.

NOTE: For the most efficient stove operation, leave a minimum of 1" (2.5cm) ash in the firebox at all times. This will help insulate a better charcoal bed.

CARE OF THE GLASS

The glass supplied with your stove is designed to withstand extremely high temperatures. However, like any glass product, IT CAN BE BROKEN! Take care not to bump it with a log or a poker, and be sure the wood is entirely inside the stove before attempting to close the door. Do not slam the door.

Periodically opening the drafts and allowing the fire to burn brightly will help reduce the soot buildup on the glass. The glass may be cleaned with a NON-ABRASIVE cleaner such as spray glass cleaner or oven cleaner. One of the simplest and most effective ways of cleaning the glass is to dip a dampened rag in the ashes and scrub the surface clean. The application of a non-stick oven spray to the inner surface of the glass will help keep it clean.

CREOSOTE- ITS FORMATION AND REMOVAL

When wood is burned slowly, it produces tar and other organic vapors, which combine with expelled moisture to form creosote. The creosote vapors condense in the relatively cool chimney flue of a slow burning fire. As a result, creosote residue accumulates in the flue lining. When ignited, this creosote makes an extremely hot fire. The chimney connector and chimney should be inspected at least twice yearly during the heating season to determine if a creosote buildup has occurred. If creosote has accumulated, it should be removed to reduce the risk of a fire.

STOVE FINISH

All stoves are finished with specially formulated high-temperature paint. During the first few firings of the stove, a slight odor of paint may be noticed. This is normal during the curing process; the fumes are not hazardous. If they should cause irritation, simply crack a door or window for a few minutes to disperse the fumes.

NOTE: Although nontoxic, the fumes may set off a nearby smoke detector.

DOOR GASKET REPLACEMENT

Remove all old gaskets and clean the gasket channel if necessary. Put high-temperature silicone adhesive in the channel and lay the gasket in so that the ends meet in the bottom right corner of the door back. Press down slightly.

CHIMNEY OR RUNAWAY FIRE

1. Call local fire department (or dial 911)
2. Close the draft fully
3. Examine flue pipes, chimney, attic, and roof of the house, to see if any part has become hot enough to catch fire. If necessary spray with fire extinguisher or water from the garden hose.
4. Do not operate the stove again until you are certain the chimney and its' lining have not been damaged.

CLEANING AND REPLACING THE GLASS

Normally a hot stove will keep the glass clean, but if you must clean the glass, use a soft cloth with no abrasive and clean only when cold. Never strike or slam the door, hit the glass or let burning wood rest against it. If the glass cracks when the fire is burning, do not open the door until the fire is out and do not operate the stove again until the glass has been replaced.

FIRE EXTINGUISHER AND SMOKE DETECTION:

All homes with a solid fuel burning stove should have at least one fire extinguisher in a central location known to all in the household, and at least one smoke detection devise in the room containing the stove. If it sounds the alarm, correct the cause but do not deactivate or relocate the smoke detection devise.

MAINTENANCE

At the end of each heating season clean the chimney and the smoke pipe. If soot has accumulated above the top baffle bricks, remove, clean, and then replace them. If the secondary air tube is badly eroded, replace it. Replace worn door gaskets and broken bricks as needed. FAILURE TO INSPECT AND CLEAN YOUR CHIMNEY SYSTEM REGULARLY CAN RESULT IN A CHIMNEY FIRE, WHICH COULD DAMAGE THE CHIMNEY OR CAUSE A HOUSE FIRE.

Warranty

All warranties by the manufacturer are set forth herein and no claim shall be made against the manufacturer on any oral warranty or representation. All claims under this warranty shall be made in writing by your dealer.

Sherwood Industries Ltd. reserves the right to repair or to replace the defective product. The defective part or stove must be returned to the Authorized Dealer, the shipping costs are prepaid by the consumer. In the event of in-home repair work, the customer will pay any in-home travel fees or service charges required by the Authorized Dealer.

Any Hudson stove or part thereof that is repaired or replaced during the limited warranty period will be warranted under the term of the limited warranty for a period not exceeding the remaining term of the original limited warranty or six (6) months, whichever is longer.

Limited 5 Year Warranty:

This warranty covers defects in materials and workmanship only if the product has been installed in accordance with local building and fire codes; in their absence, refer to the owner's/technical manual(s). If the product is damaged or broken as a result of misuse or mishandling, the warranty does not apply. The warranty does not cover removal and re-installation costs. Your woodburning stove will be warranted by Sherwood Industries Ltd. for a period of five (5) years from the date you receive it except the handles, glass door panels, cement, and gasketing, which will be warranted as stated below.

Limited 1 Year Warranty:

The handles, glass door panels, cement, and gasketing will be warranted by Sherwood Industries Ltd. for a period of one (1) year from the date you receive it.

Exclusions and Limitations:

1. This warranty does not cover misuse of the Hudson woodstove as stated in the Owner's Manual nor modifications to the stove not authorized by Sherwood Industries Ltd or an authorized Enviro dealer.
2. Sherwood Industries Ltd. does not offer a warranty on chipping of the enamel surfaces. Please inspect your Hudson stove for any damage to the enamel prior to accepting it.
3. This warranty does not cover misuse of the Hudson glass, including:
   - The glass is struck or has surface contaminates or has had harsh or abrasive cleaners used on it.
   - The door is slammed or is closed while wood in the firebox is protruding out the stove opening.
4. Misuse includes overfiring, this will result if the Hudson is used in such a way that one or more of the plates glow red. Overfiring can be identified later by warped plates, paint pigment being burnt off, and/or the porcelain enamel finish has bubbled, cracked, chipped or discoloured.
5. This warranty does not cover damage caused by burning salt saturated wood, chemically treated wood or any fuel not recommended in the Owner's Manual.
6. Salt-air in coastal areas or high-humidity can be corrosive to the porcelain enamel finish. These environments can cause rusting of the cast iron beneath the porcelain enamel finish, which may cause the porcelain enamel finish to flake off. Damage caused by salt air or high humidity is not covered by this warranty.
7. This warranty does not cover damage caused to the Hudson while in transit. Do not operate the stove and contact your courier and/or dealer.
8. Sherwood Industries Ltd. and its' employees or representatives will not assume any damages, either directly or indirectly caused by improper usage, operation, installation, servicing or maintenance of this appliance.
9. Sherwood Industries Ltd. reserves the right to make changes without notice. Please complete and mail the warranty registration card and have the installer fill in the installation data sheet in the back of the manual for warranty and future reference.

Installation Data Sheet

The following information must be recorded by the installer for warranty purposes and future reference.

NAME OF OWNER:

_____

ADDRESS:

_____

_____

_____

PHONE:_____

NAME OF DEALER:

_____

ADDRESS:

_____

_____

_____

PHONE:_____

MODEL:_____

SERIAL NUMBER:_____

DATE OF PURCHASE: _____ (dd/mm/yyyy)

DATE OF INSTALLATION:_____(dd/mm/yyyy)

INSTALLER'S SIGNATURE:

_____

NAME OF INSTALLER:

_____

ADDRESS:

_____

_____

_____

PHONE:_____

MANUFACTURED BY:
SHERWOOD INDUSTRIES LTD.
6782 OLDFIELD RD. SAANICHTON, BC, CANADA V8M 2A3
www.envirofire.biz
November 20, 2003
C-10099