SHERWOOD INDUSTRIES IS AN ENVIRONMENTALLY RESPONSIBLE COMPANY
THIS MANUAL IS PRINTED ON RECYCLED PAPER

EG 28 B Vented

By SHERWOOD INDUSTRIES

OWNERS MANUAL



WHAT TO DO IF YOU SMELL GAS

- Open windows
- Do not try to light any appliance.
- Do not touch any electrical switch; do not use any phone in your building.
- Immediately call your gas supplier from a neighbor's phone. Follow the gas supplier's instructions.
- If you cannot reach your gas supplier, call the fire department.

WARNING

If the information in this manual is not followed exactly, a fire or explosion may result causing property damage, personal injury or loss of life installation and service must be performed by a qualified installer, service agency or the gas supplier.

FOR YOUR SAFETY

Do not store or use gasoline or other Flammable vapors and liquids in the vicinity of this or any other appliance.

Massachusetts installations **(WARNING):** This product must be installed by a licensed plumber or gas fitter when installed within the Commonwealth of Massachusetts. Other Massachusetts code requirements: Flexible connector must not be longer than 36", shutoff valve must be a "T" handle gas cock, only direct vent sealed combustion products are approved for bedroom/bathrooms, fireplace dampers must be removed or welded in the open position prior to the installation of a fireplace insert or gas log.

SAFETY PRECAUTIONS

FOR SAFE INSTALLATION AND OPERATIONOF YOUR "ENVIRO" STOVE, PLEASE, CAREFULLY READ THE FOLLOWING INFORMATION:

GENERAL

- Installation and repair should be done by a qualified service person. The appliance should be inspected before use and at once least annually by a qualified service person. More frequent cleaning may be required due to excessive lint from carpeting, bedding material, etc. It is imperative that control compartments, burners and circulating air passageways of the appliance be kept clean.

- Due to high temperatures, the appliance should be located out of high traffic areas and away from furniture and draperies.
Children and adults should be alerted to hazards of high surface temperatures and should stay away to avoid burns or clothing ignition.

- Young children should be carefully supervised when they are in the same room as the appliance.

- Clothing or other flammable material should not be placed on or near the appliance.

- All "ENVIRO" gas-fired appliances must be installed in accordance with these instructions. Carefully read all the instructions in this manual first. Consult the building authority having jurisdiction to determine the need for a permit prior to commencing the installation.

- **NOTE** Failure to follow these instructions could cause a malfunction of the fireplace, which could result in death, serious bodily injury, and/or property damage.
- Failure to follow these instructions may also void your fire insurance and/or warranty.

FOR YOUR SAFETY:

- A qualified installer, service agency or the gas supplier, must perform installation and service.
- Installation must conform to local codes or, in the absence of local codes, with the current CAN/CGA-B149 installation code in Canada or the current National Fuel Gas Code ANSI Z223.1 in the USA.

- To prevent injuries do not allow anyone who is unfamiliar with the operation to use the stove.

- **Always keep the appliance area clear and free of combustible materials, gasoline and other flammable vapors and liquids.**

- These appliances should not be used as a drying rack for clothing or for hanging Christmas stockings or decorations.

- Due to the paint curing on the stove a faint odor and slight smoking will likely be noticed when the stove is first used. Open a window until the slight smoking stops. Always connect this gas stove to a chimney and vent to the outside of the building envelope. Never vent to another room or inside a building. Make sure you use the vent pipe that is specified. Make sure that the vent is properly sized and is of adequate height to provide the proper draft. Inspect the venting system annually for blockage and any signs of deterioration.

WARNING: Do not operate with cracked or broken glass. Under no circumstances should this appliance be modified. Parts that have to be removed for servicing must be replaced prior to operating this appliance. Only parts supplied by Enviro should be used in this appliance and replacement should only be performed by a licensed or qualified service person.

- Never use solid fuels such as wood, paper, cardboard, coal, or any other flammable liquids etc., in this appliance.

- Do not use this heater if any part has been under water. Immediately call a qualified service technician to inspect the heater and to replace any part of the control system and any gas control, which has been under water.

- Do not abuse glass by striking or slamming door shut.

TABLE OF CONTENTS

Safety Precautions	2
Code Approvals	3
Deciding where to locate your stove	4-5
Venting	6
Installation of Log Sets and Embers	8
Operating Instructions	9
Maintenance and Technical	10
Trouble Shooting	11
Gas Line Connection	12
Electrical	13
Parts and Accessories	14
Fuel Type Conversion	15
Warranty	16
Parts List	17
Exploded Views	18-19
Installation Data Sheet	20

CODE APPROVALS

- This Vented appliance draws all of its combustion air from the dwelling and must be vented using listed B or L vent. May also be vented through a conventional chimney using a chimney liner kit.

This appliance have been tested by INTERTEK TESTING SERVICES (WH) and found to comply with the established standards for a VENTED GAS FIREPLACE HEATER in CANADA and the USA as follows:-

LISTED GAS FIRED VENTED ROOM HEATER (EG 28 BV. Nat. & LPG.)
TESTED TO: ANSI Z21.88-1998 CSA 2.33-M98 VENTED GAS FIREPLACE HEATER
CGA 2.17-M91 GAS FIRED APPLIANCES FOR USE AT HIGH ALTITUDE

SPECS:

ENVIRO EG 28 B VENT UNITS;

- Have all been certified for use with either natural or propane gases. (See control panel and rating label.)
- Are not for use with solid fuels.
- Must not be connected to a chimney flue serving a separate solid-fuel burning appliance.
- Are approved for bedroom or bedsitting room.
  (**IN CANADA**: must be installed with a listed wall thermostat)
  (**IN USA**: see current ANSI Z223.1 for installation instructions.)
- Must be installed in accordance with local codes if any. If none exist, use current installation code CAN/CGA - B149 in Canada or ANSI Z223.1 / NFPA 54 in the USA.
- Must be properly connected to an approved venting system.
- Are approved for installation on combustible materials.
- Are not approved for closet or recessed installations.

FOR INSTALLATIONS: ABOVE 2000 FEET (610 m).

In Canada these appliances must have the input de-rated by 10% as per the gas code.
In the USA these appliances must have the inputs de-rated by 4% for every 1000 feet (305m) above sea level.

ASSEMBLY INSTRUCTIONS

Remove the packaging from the appliance, check to make sure there is no damage. If damage is found, PREPARATION FOR INSTALLATION

- Please report it to both the carrier and your dealer as soon as possible.
- Before beginning, carefully check the glass door and the log set

DECIDING WHERE TO LOCATE YOUR STOVE

DIMENSIONS:

Front Width: 22" (56cm)
Rear Width: 22" (56cm)
Height: 27-1/2" (70cm)*
Depth: 19" (48cm)
(*Not including vent coupling)

Shipping Weight: 210 lbs (95 kg)

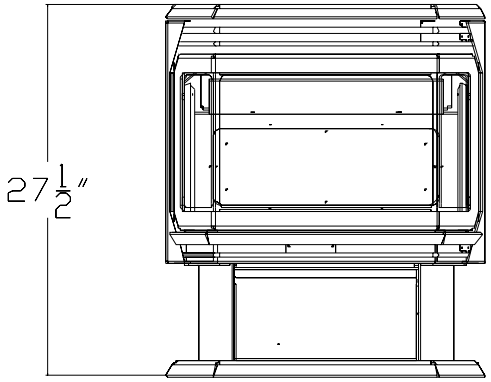

FIG. 1

CLEARANCES:

A. Side wall to stove	10" (25cm)
B. Rear wall to stove	4" (10cm)
C. Combustible to stove Top	22” (56cm)
D. Floor to stove	0” (0cm)
E. Corner clearance	2" (5cm)
F. Alcove depth	48" (122cm)

Maintain sufficient clearances for service and maintenance.

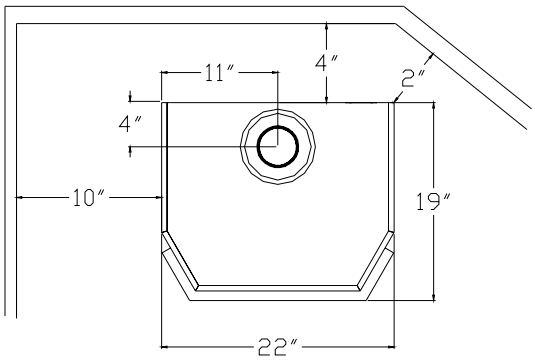

FIG. 2

- The stove should be located out of traffic and away from furniture and draperies.
- The stove should have sufficient access for its safe operation and maintenance.
- Locate a position where the flue system of the stove can be properly installed without damaging the integrity of the building: e.g. cutting a wall or ceiling joist.
- The stove can be installed on any standard flooring materials i.e. Wood, carpet or linoleum.
- Check stove and flue system clearance requirements.
- Locate the stove where it can be accessed by a gas supply line.
- Locate the stove in a large and open room that is centrally located in the house. This will optimize heat circulation and comfort.
- As the stove is equipped with a convection fan, ensure that an electrical outlet is within 6ft. (1.8m) of the stove.
- These stoves can be installed in bedrooms.
  (**IN CANADA**: must be installed with a listed wall thermostat)
  (**IN USA**: see current ANSI Z223.1 for installation instructions.)
- The flow of combustion and ventilation air must not be obstructed.

VENT TERMINAL CLEARANCES

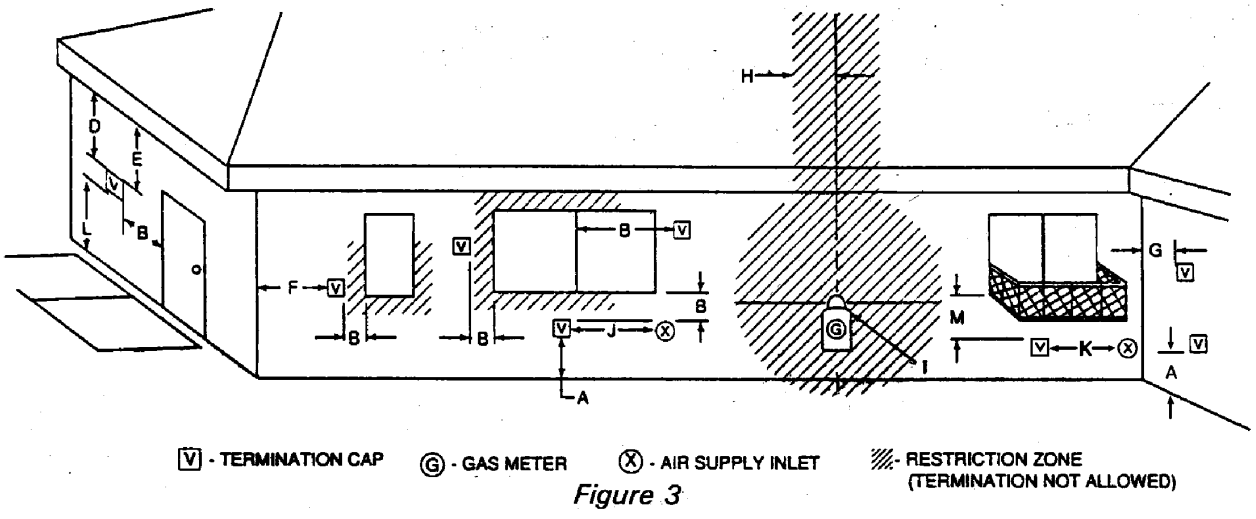

Figure 3

Figure 3

A= Clearance above grade, verandah, porch, deck, or [balcony (*12 inches (30cm) minimum]

B= Clearance to window or door that may be opened [*12 inches (30cm) minimum]

C= Clearance to permanently closed window [minimum 12 inches (30cm) recommended to prevent condensation on window]

D= Vertical clearance to ventilated soffit located above the terminal within a horizontal distance of 2 feet (60cm) from the center-line of the terminal 24 inches (60cm) minimum

E= Clearance to unventilated soffit [18 inches (45cm) minimum]

F= Clearance to outside corner [12 inches minimum]

G= Clearance to inside corner [`12 inches minimum]

H= *Not to be installed above a meter/regulator assembly within 3 feet (90cm) horizontally from the center-line of the regulator

I= Clearance to service regulator vent outlet [*6 feet (1.8m) minimum]

J= Clearance to non-mechanical air supply inlet to building or the combustion air inlet to any other appliance [12 inches (30cm) minimum]

K= Clearance to a mechanical air supply inlet [*6 feet (1.8m) minimum]

L= *** Clearance above paved side-walk or paved driveway located on public property [*7 feet (2.1m) minimum]

M= Clearance under verandah, porch, deck, or balcony [*24 inches (60cm) minimum **]

*** A vent shall not terminate directly above a sidewalk or paved driveway, which is located between two single-family dwellings and serves both dwellings.

** Only permitted if verandah, porch, deck, or balcony, is fully open on a minimum of 2 sides beneath the floor

- As specified in CGA B149 Installation Codes (1991) Note: Local Codes or Regulations may require different clearances

VENTING

This model must have a vent opening in the rear of the unit. Confirm this and also check that the label on the right side panel door states "Vented Room Heater".

WARNING: THIS APPLIANCE HAS BEEN DESIGNED TO OPERATE BY DRAWING COMBUSTION AIR AND DILUTION AIR FROM THE ROOM. THE DRAFT HOOD LOCATED IN THE SAME ATMOSPHERIC PRESSURE ZONE AS THE COMBUSTION AIR INLET TO THE APPLIANCE. IT IS ALSO DESIGNED TO DRAW ROOM AIR FOR PROPER HEAT CIRCULATION FROM THE REAR OF THE UNIT. BLOCKING OR MODIFYING THE LOUVERS IN ANY WAY CAN CREATE HAZARDOUS SITUATIONS, EITHER THROUGH POOR VENTING OR BY OVERHEATING. IT IS IMPORTANT THAT THIS UNIT HAS SUFFICIENT AIR CIRCULATION FOR PROPER VENTING AND COMBUSTION THUS PROVISIONS MUST BE MADE FOR THE SUPPLY OF ADEQUATE COMBUSTION AND VENTILATION AIR.

WARNING: Operation of this heater when not connected to a properly installed and maintained venting system or tampering with the vent safety shutoff system can result in carbon monoxide (CO) poisoning and possible death.

THE APPLIANCE CANNOT BE CONNECTED TO A CHIMNEY FLUE SERVICING A SEPARATE SOLID FUEL BURNING APPLIANCE.

FLUE GAS SPILL SWITCH

NOTE: THIS HEATER MUST BE PROPERLY CONNECTED TO A VENTING SYSTEM. THIS HEATER IS EQUIPPED WITH A VENT SAFETY SHUTOFF SYSTEM DESIGNED TO PROTECT AGAINST IMPROPER VENTING OF COMBUSTION PRODUCTS. THIS SAFETY SWITCH IS LOCATED ON THE REAR OF THE APPLIANCE CLOSE TO THE DRAFT HOOD RELIEF OPENING.

IF THE SWITCH TRIPS MORE THAN ONCE, THE CHIMNEY SHOULD BE INSPECTED BY A QUALIFIED SERVICE TECHNICIAN FOR POSSIBLE BLOCKAGE OR SEVERE DOWN DRAUGHT CONDITIONS

This stove should be vented by certified 4" Type B Gas Vent or a flexible gas vent liner, which may be encased in 6” decorative, stove pipe. The flue collar of the appliance will fit inside of standard vent and may be fastened directly to the vent.

The ENVIRO incorporates its own internal draft hood, so no additional external draft hood is required.

Check periodically that the vent is unrestricted and an adequate draft is present when the unit is in operation.

The venting system should be assembled and installed according to the vent manufacturer's instructions and the local, state/provincial or national codes. Two basic venting configurations are shown as rough guidelines only. Follow national and local codes for other installation options.

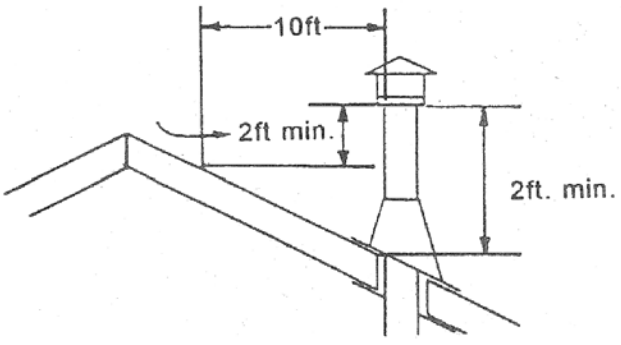

Height above
roof surface within
10ft horizontally

A. USING AN EXISTING CHIMNEY

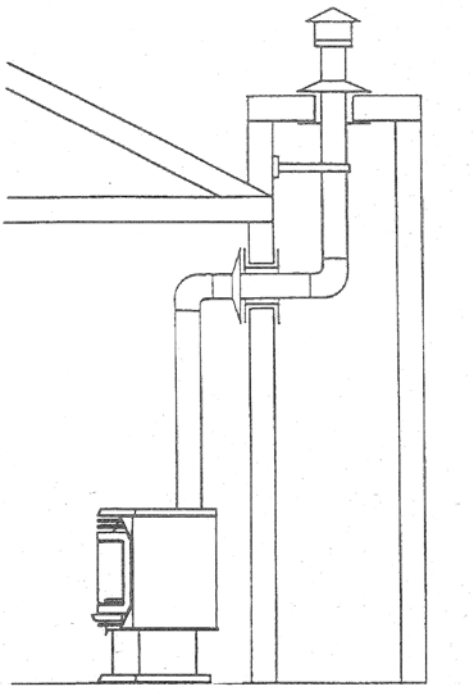

- Measure the height of the chimney beforehand and purchase the appropriate kit. Never attempt to over stretch a flexible liner to accommodate the height of the chimney.
- Any flue damper must be removed or locked permanently in the open position.
- The chimney must be clean, in good working order and constructed out of non-combustible materials.
- Make sure that all chimney clean-outs are tightly fitting and will not permit air to leak into the chimney.
- Make all gas connections and check for leaks.

See vent manufacturer's instructions for vent system clearances to combustibles and vent terminal clearance from roof.

MANUFACTURERS GENERAL VENTING GUIDELINES

This information is compiled by the manufacturer as a very general rule for single appliance venting of the EG 28 gas stove with 4" Type B gas vent.

Venting code and regulations may vary from area to area, please check with the local, state/provincial codes regarding the suitability of your application.

For other special venting requirements, please refer to the local, state/provincial or national codes.

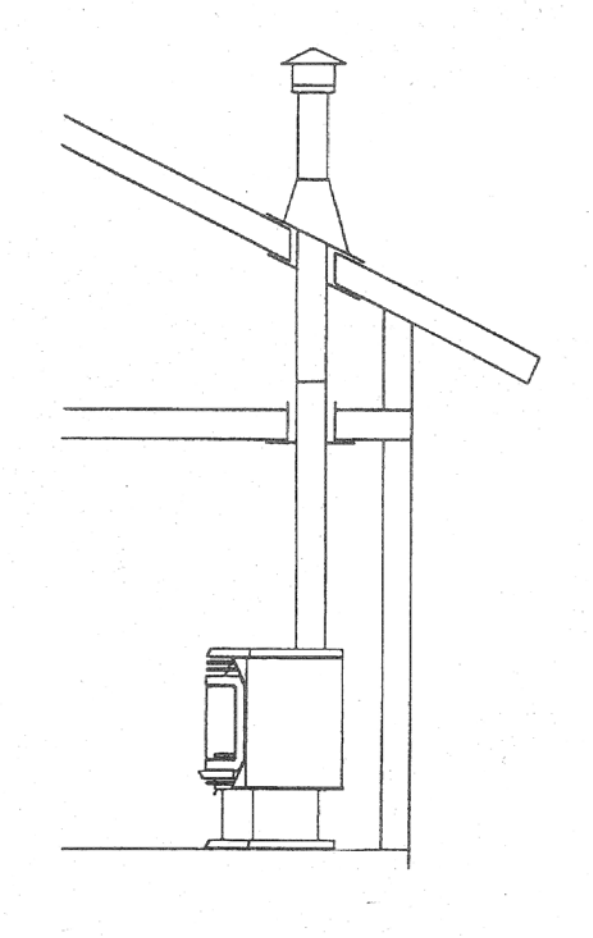

For best venting performance, we recommend total vent height of 10 ft (3m) to 30 ft (9m). Total horizontal length depends on the number of elbows used. The venting

Should never slope down. 1/4" rise per 2' horizontal is recommended.

If practical, it is best to locate the appliance to permit the use of shorter horizontals and fewer elbows.
-Two 90° elbows, maximum total horizontal length of 20 ft (6m).
-Three 90° elbows, maximum total horizontal length of 13 ft (3.8m).
-Four 90° elbows, maximum total horizontal length of 6 ft (1.9m).
-Five 90° elbows, maximum total horizontal length of 0 ft (0m).

If 45° elbows are used, one 90° elbow is equivalent to two 45° elbows.

Venting rise should be a minimum of 1 ft (.31m).from the top of the unit before any horizontal run.

The bottom of the vent cap shall extend at least 2 ft. (.6m) above the highest point of the roof where it passes through and at least 2 ft (.6m) higher than any portion of the roof within a horizontal distance of 10 ft. (3m).

INSTALLATION OF LOG SET and EMBERS

INSTALLING THE GLOWING EMBERS

A bag of Rock Wool embers is provided for use on the burner tray.

CAUTION: Use only the type of ember material supplied with this appliance. Due to the irregular size of the ember material there may be more than required.

If over time, through cleaning and servicing, these embers require replacement, contact the nearest ENVIRO dealer for replacement embers.

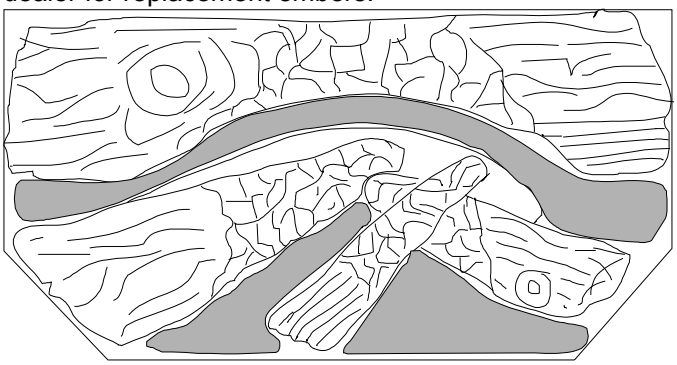

Remove the ember material from the plastic bag.

Cover the shaded areas in the diagram shown beside.

Totally fill these areas with glowing ember material

Do not pack embers down on burner. Leave embers loose.

CAUTION: NEVER OPERATE THIS APPLIANCE WITH THE DOOR REMOVED

INSTALLING THE LOGSET

Carefully remove logs from box. Check to ensure there is no damage. It is very important to install the logs in their proper position to insure safe, optimum operating conditions.

1. Open the front door.
2. Place each piece of the log set into the firebox resting the pins in the holes in the logs.
3. Close the door and tighten securely.

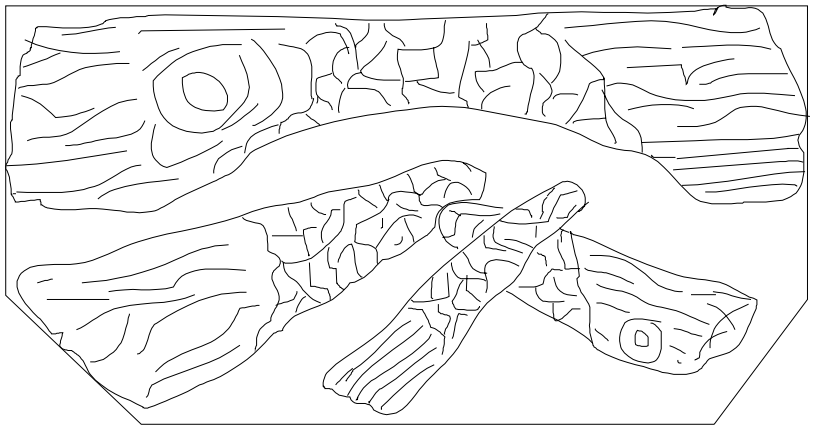

Upon the first light up, watch for ignition to **all** burner ports. If a long delay is noted:

a) First, wait for the appliance to cool down

b) Open the front door of the appliance.

(See adjusting the venturi section to adjust air for proper flame).

IMPRTANT NOTE: When the unit is turned on for the first time, it should be turned onto high without the fan on for the first 4 hours. This will cure the paint, logs, gasket material and the other products used in the manufacturing process. It is advisable to open a window or door, as the unit will start to smoke and can irritate some people. After the unit has gone through the first burn turn the unit off including the pilot, let the unit get cold then remove the glass door and clean it with a good gas fireplace glass cleaner, available at your local ENVIRO dealer. (See page 10 glass cleaning.

OPERATING INSTRUCTIONS

FOR YOUR SAFETY READ BEFORE OPERATING

WARNING: IF YOU DO NOT FOLLOW THESE INSTRUCTIONS EXACTLY, A FIRE OR EXPLOSION MAY RESULT CAUSING PROPERTY DAMAGE, PERSONAL INJURY OR LOSS OF LIFE.

A) This appliance is equipped with a pilot, which must be lit by hand by following these instructions exactly.

B) BEFORE LIGHTING smell all around the appliance area for gas, and next to the floor because some gas is heavier than air and will settle on the floor.

WHAT TO DO IF YOU SMELL GAS:

- Do not try to light any appliance.
- Do not touch any electrical switch; do not use any phone in your building.
- Immediately call your gas supplier from a neighbor's phone, follow the gas supplier's instructions.
- If you cannot reach your gas supplier, call the fire department.

C) Use only your hand to push in or turn the gas control knob. Never use tools. If the knob will not push in or turn by hand, do not try to repair it. Call a qualified service technician. Force or attempted repair may result in a fire or explosion.

D) Do not use this appliance if any part has been under water. Immediately call a qualified service technician to inspect the appliance and to replace any part of the control system and any gas control which has been under water

LIGHTING INSTRUCTIONS

1. STOP! Read the safety information above.
2. Turn off all electrical power to the appliance.
3. Turn the gas control knob clockwise  to the "off' position.
4. Open door. **Wait five (5) minutes to clear out any gas**. Close door. If you smell gas including near the floor, **STOP!** Follow "B" in the above safety information. If you don't smell gas go to next step.
5. Find the pilot located to the right between the front and rear burner.
6. Turn gas control knob counter-clockwise  to "PILOT".
7. Push the gas control knob in fully and hold. Immediately light the pilot by pushing the piezo spark Ignitor. Keep knob depressed for about 30 seconds after pilot is lit. Release knob. If pilot goes out, repeat steps 4 through 6.

WARNING: The gas valve has a lockout device, which will not allow the pilot burner to be re-lit until the thermocouple, has cooled.

If the knob does not pop up when released, stop and immediately call your service technician or gas supplier.

NOTE: Check to be sure the pilot flame engulfs the thermocouple and that the burners light completely.

If the pilot will not stay lit after several tries, turn the gas control knob to "OFF" and call you service technician or gas supplier.

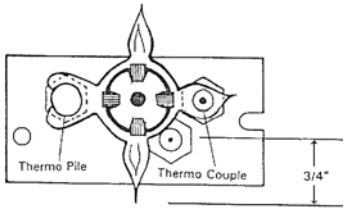

8. Turn gas control knob counter-clockwise  to the "ON" position.
   Flip burner switch to "ON" then turn "HI / LO" knob to the desired setting.

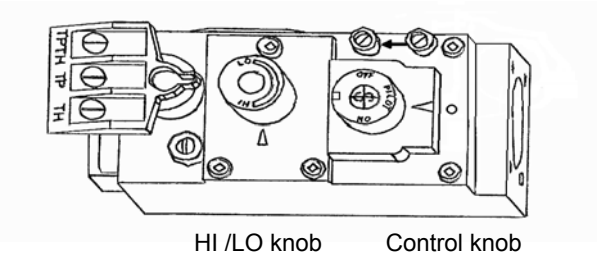

HI /LO knob Control knob

9. Turn on all electrical power to the unit

TO TURN OFF GAS TO APPLIANCE

1. Turn the gas control knob  clockwise to "OFF" DO NOT FORCE
2. Turn off all electrical power to the appliance if service is to be performed.
3. Flip burner switch to off.

MAINTENANCE AND TECHNICAL

Annually check to ensure that your Venting system is clear.

Periodically check the pilot and burner. Check to see that all the burner ports are clean and clear. Check the pilot head for blockage. Check to ensure the pilot flame is blue with small yellow tips.

CLEANING OF GLASS

Do not clean glass when hot

It will be necessary to clean the ceramic glass periodically. During a cold start up, condensation will sometimes form on the glass; this is a normal condition with all gas fireplaces and stoves. However, this condensation can allow dust and lint to cling to the glass surface. Initial paint curing of the appliance can leave behind a slight film on the glass. This is a temporary problem. It is therefore recommended that the glass be cleaned initially after about the first two weeks of use.

After that, depending upon the amount of use, cleaning should be required no more than two or three times per season.

To clean the door, use a mild glass cleaner and a soft cloth. Abrasive cleaners will damage the glass and gold surfaces.

OPENING THE DOOR

Turn unit off and wait until the appliance has cooled down.

1. Open the right hand hinged side flap, which will expose a door fastener. Using a 1/2" wrench, loosen the fastener.

1. Due to the shape of the bay window door. You must also open the left-hand side flap before attempting to open the door.

3. Ensure the door is properly fastened after cleaning before attempting to re-light the appliance.

TO REPLACE DOOR AND GLASS ASSEMBLY

The glass in this appliance is an integral part of the door assembly. If the glass is damaged or broken a replacement door assembly including glass must be fitted.

To Replace:

- Open door fully
- Lift door vertically so that hinge pins lift out of hinge receivers.
- Return the door assembly to dealer.

The door and glass assembly must be replaced as a complete unit. By your ENVIRO Dealer. No substitute materials are allowed.

Use extreme caution cleaning up broken glass. Use thick gloves and broom to brush glass up.

FOR CLEANING THE INSIDE OF THE FIREBOX

Remove the logs carefully from the firebox. Gently remove the embers and place on a piece of paper towel, until ready to replace.

Vacuum the firebox thoroughly. Carefully clean off any dust on the logs and remove any lint from the main burner and pilot burner.

After carefully replacing the log and embers in their correct positions, and the door has been resealed, re-light the pilot, following the instructions on the attached label.

CLEARANCES MUST BE SUFFICIENT TO ALLOW ACCESS FOR MAINTENANCE AND SERVICE

TROUBLE SHOOTING

Problem	Possible Cause	Solution
Spark will not light the pilot after repeated pressing of spark Ignitor	Defective piezo Ignitor	Check connections to Ignitor -If Ignitor connections are good but there is no spark-replace Ignitor
	Broken spark electrode	-Check for broken ceramic insulation replace, electrode if broken
	Miss-aligned spark electrode	-If spark is not arcing from the electrode to pilot- adjust by loosening screws on pilot base. Adjust and re-tighten
Pilot will not remain lit	Problem with thermocouple circuit	-Check for proper connection of thermocouple to rear of valve. If loose, tighten lightly -Check pilot for full flame impingement around thermocouple. If the pilot is to small - Check gas pressure, adjust pilot rate screw check pilot head for blockage. -Check thermocouple voltage at valve- must be greater than 5 mV. If low replace thermocouple.
	Air in gas line - (Pilot flame dies while knob is depressed.)	-Bleed line. -Check gas line pressure. -Contact dealer.
Burners will not remain lit	Problem with thermopile circuit	-Check gas line pressure. -Check for flame impingement on thermopile, if low see “Pilot will not stay lit” -Check thermopile for a Minimum of 300 mV when burner switched on. -Check wiring to thermostat for breaks.
Flame lifting	Leak in vent pipe Improper vent configuration Terminal may be recirculating flue gases	-Check for leaks in vent connections -Check vent configuration with manual -Check to see if terminal is on correctly -May need to install high wind termination cap -Contact dealer.
Glass fogs up	Normal conditions - after the appliance warms up glass will clear ** Due to additives in gas, glass may get hazy during normal use** Clean when needed.	
Blue flames	Normal during start - flame will yellow as the appliance heats up.	
Flames are burning “dirty” or Sooting	Flame impingement	-Check log position -Increase primary air by opening venturi shutters See also “Burners will not stay lit”

GAS LINE CONNECTION

ORIFICE SIZES, PRESSURE AND BTU'S

	NATURAL GAS	PROPANE GAS
Orifice size	**#43dms**	**#53 dms**
Manifold pressure.	**3.8"wc (0.95kPa)**	**11" wc (2.74 kPa)**
Min. Manifold pressure.	**1.1"wc (0.27kPa)**	**2.7" wc (0.67 kPa)**
Supply Pressure.	**7.0"wc (1.74kPa)**	**12" wc (2.98 kPa)**
Min. Supply pressure.	**5"wc (1.25kPa)**	**11.5" wc (2.86 kPa)**
Max. BTUH Input.	**26,500 Btu/h(7.87 kW)**	**26,500 Btu/h(7.87 kW)**
Min. BTUH Input.	**13,500 Btu/h(3.9 kW)**	**13,500 Btu/h(3.9 kW)**
Output fan off	**20,700 Btu/h(6.06 kW)**	**21,200 Btu/h(6.21 kW)**
Output fan on	**21,200 Btu/h(6.21 kW)**	**21,700 Btu/h(6.35 kW)**

WARNING: Only persons licensed to work with gas piping may make the necessary gas connections to this appliance.

NOTE: The gas line connection may be made using 3/8" rigid tubing or an approved flex connector. Since some municipalities have additional local codes it is always best to consult your local authorities and the CAN/CGA-B149 (1 or 2) Installation Code. For USA gas installations follow either local codes or the current edition of the National Fuel Gas Code ANSI.Z223.1.

UPON CONNECTION, MARK APPROPRIATE FUEL TYPE ON RATING LABEL LOCATED ON THE INSIDE OF THE RIGHT HAND SIDE PANEL.

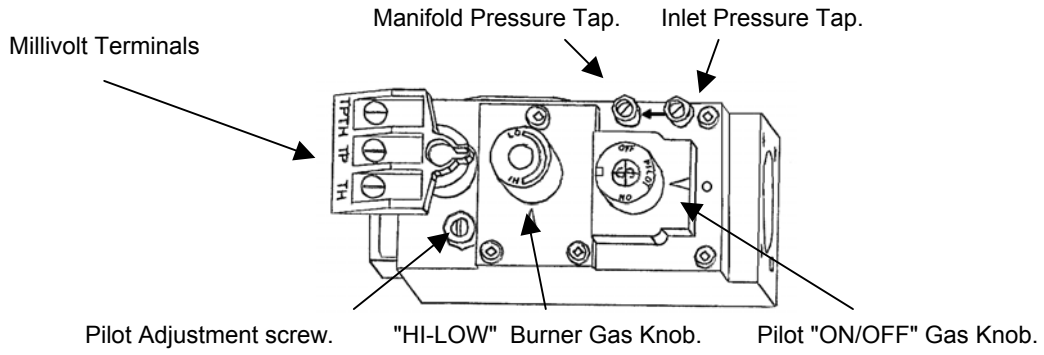

The appliance and its shutoff valves must be disconnected from the gas supply piping system during any pressure testing where the pressure exceeds 1/2 PSIG (3.45 kPa) or damage will occur to the valve.

The appliance must be isolated from the gas supply piping system by closing its individual manual shutoff valve during any pressure testing of the gas supply piping system at test pressures equal to or less than 1/2 psig (3.5 kPa).

When using copper or flex connectors use only fittings approved for gas connections.

TO TEST

The pressure taps are located in the top right corner on the valve face (right - inlet, left - manifold pressure).

- Turn set screw counter clockwise to loosen, 2 turns.
- Place 5/16" hose over pressure tap system.
- When finished, release pressure, remove hose & tighten setscrew.

Always check for gas leaks with a soap and water solution after completing the required pressure test.

NEVER USE AN OPEN FLAME FOR LEAK TESTING

ELECTRICAL

The **ENVIRO EG 28.FS.BV.** Will operate with no external power supply. These models have a Millivolt gas control that uses the pilot flame to generate enough electricity to operate the main burner.

The appliance when installed, must be electrically connected and grounded in accordance with local codes or in the absence of local codes, with the current CSA C22.1 CANADIAN ELECTRICAL CODE. Part 1, SAFETY STANDARDS FOR ELECTRICAL INSTALLATIONS, or THE NATIONAL ELECTRICAL CODE ANSI / NFPA 70 in the USA.

NOTE:

- Operation of the fan increases the efficiency and the heat output of the appliance.
- The thermostat connects to the two purple wires in the harness
- Control panel light uses a 7w Max. bulb

CAUTION

Label all wires prior to disconnection when servicing controls. Wiring errors can cause improper and dangerous operation. Verify proper operation after servicing.

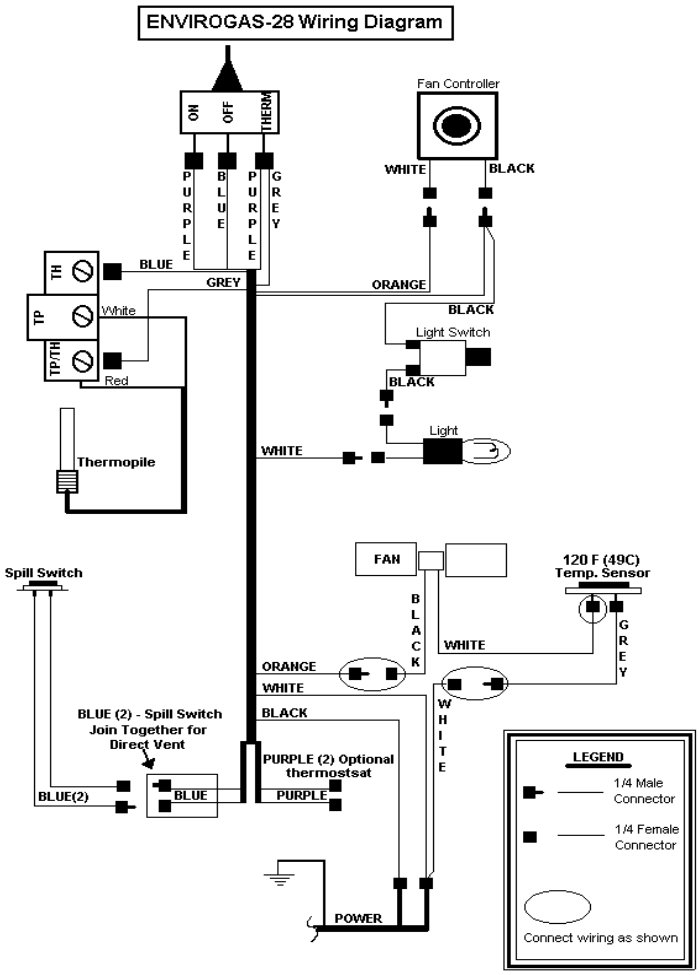

WARNING: ELECTRICAL GROUNDING INSTRUCTIONS.
This appliance is equipped with a three-prong (grounding) plug for your protection against shock hazard and should be plugged into a properly grounded three-prong receptacle.

DO NOT cut or remove the grounding prong from the plug.

INSTALLING REMOTE THERMOSTAT OR WALL SWITCH

RECOMMENDED WIRE SIZE for thermostat installation: 18 Gauge, 2 wire solid core, Low Voltage wire. (Bell wire)

1. Install the 18 Gauge wire supplied to the two terminals on the thermostat or remote wall switch.
2. Connect the other end of the wire to the gas valve using the two outside terminals on the front of the gas valve. Use the terminals marked (TP/TH and TH).

RECOMMENDED MAXIMUM LEAD LENGTH (TWO WIRE)
WHEN USING WALL THERMOSTAT

WIRE SIZE	MAXIMUM LENGTH
14 GAUGE	100 FEET
16 GAUGE	64 FEET
18 GAUGE	40 FEET
20 GAUGE	18 FEET

PARTS AND ACCESSORIES

Service Parts available from your local Enviro Dealer

Burner Control Assembly
Natural Gas Pilot Assembly
Propane Pilot Assembly
Door Bolt
Relief Door Gasket
Regulating Valve
Piezo Ignitor
Burner Switch
B-vent Spill switch 220°
Orifice Blank
Convection Blower
Light Bulb Holder
Light Switch (momentary)
Fan Controller
Log Set (with Embers)
Thermocouple
Embers
Thermopile
Door Gasket
Convection Fan Sensor 120° (48°C)

Accessories

Gold trim Package
Low Voltage Thermostat

REMOVING or INSTALLATION OF THE BLOWER

1. Turn the unit off and remove the log set.

2. Remove the burner tray assembly by removing the screw on either side of the tray, between the front and rear burners. Lift the tray out

3. Remove the 4-5/16” bolts that hold the blower mounting plate to the back firewall. Use a light lubricating oil on screws before removal.

4. Carefully pull the assembly into the firebox. Install the blower onto the mounting bracket (blower outlets pointing through the two holes in the bracket) using the 4 screws provided.

5. Connect wires according to the wiring diagram. (If removing the blower, disconnect the blower leads from the harness. Remove the blower.)

6. Check mounting plate gasket and reverse steps 1 through 4 to reinstall.

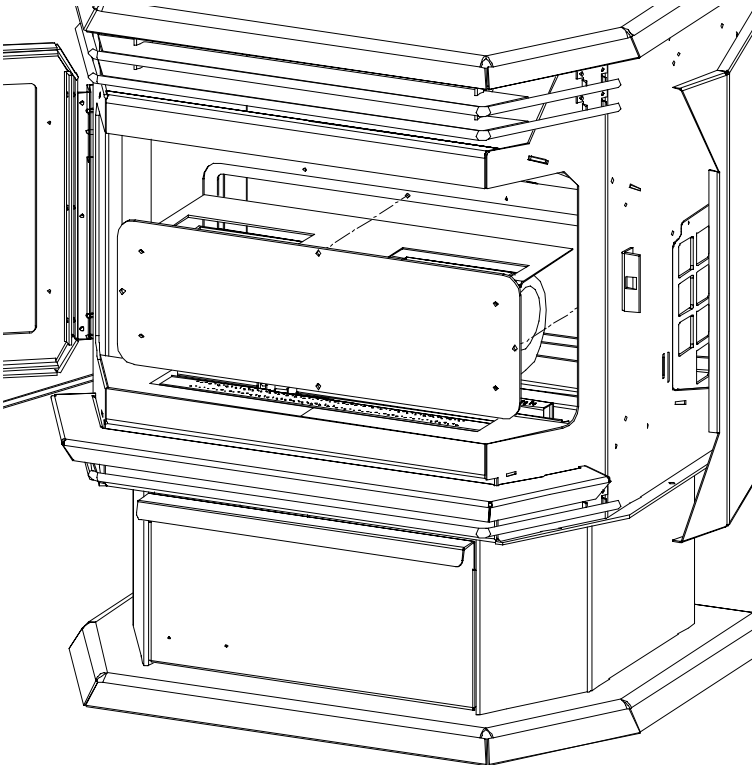

ADJUSTING THE VENTURI

- Remove the ash shelf by undoing the screw at each end, pull shelf towards you.
- Remove one screw from the cover plate located below the ash shelf. Loosen the other screw (do not remove) swing the cover plate out of the way and tighten screw down to hold it in place.
- With along screwdriver rotate spring clips to open or close the shutter to the desired setting.
- **The burner flame should be a bright yellow/orange when hot. Excessive blue is to lean and dark orange with soot is too rich.**

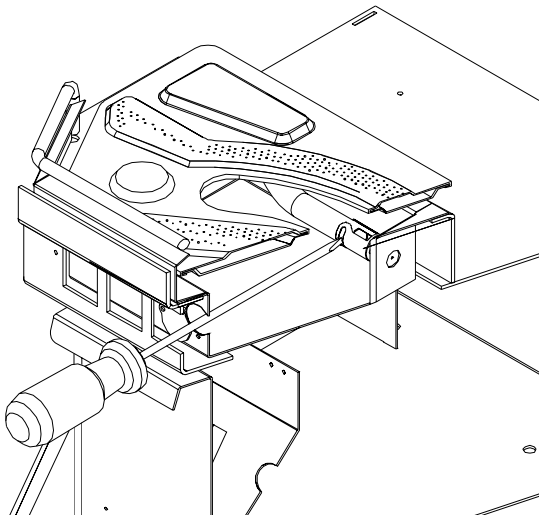

FUEL CONVERSION

"Warning": This conversion kit shall be installed by a qualified service technician in accordance with the manufacturer's instructions and all applicable codes and requirements of the authority having jurisdiction. If the information in these instructions is not followed exactly, a fire, explosion or CO poisoning may result. The qualified service agency is responsible for the proper installation of this kit. The installation is not proper or complete until the operation of the converted appliance is checked as specified in the owner's conversion kit.

Please read and follow these instructions. Also please read the instruction guide lines provided by S.I.T on how to remove and install the HI-LOW regulator.

STEP 1. Carefully inspect all parts supplied with this conversion kit.
STEP 2. Shut the gas off and disconnect the main gas line from the unit.
STEP 3. Open the door by unscrewing the ½" bolt on the right hand side of the stove. Lift door off the hinges mounted on the left-hand side. Remove the burner tray top for the appliance
STEP 4. Change the regulator on the front of the gas valve. (Follow the instructions provided by S.I.T)
STEP 5. To change the pilot orifice: First, remove the two (2) T-20 Torx screws that hold the pilot assembly to the burner tray. Lift the pilot assembly from the burner tray. Using a 10mm wrench, disconnect the pilot line from the pilot assembly and remove the pilot injector. Install the new pilot injector.
(BE CAREFUL WHEN TIGHTENING THE PILOT FITTING, YOU COULD BREAK THE CERAMIC IGNITOR ELECTRODE).
STEP 6. Re-install the pilot assembly in the reverse order of STEP 5.
STEP 7. Remove the burner orifice with a ½" deep socket.
STEP 8. Install the new orifice supplied making sure that the orifice is in the correct location. Be sure to put a bead of pipe thread sealant or approved Teflon tape on the orifice before installing into the burner assembly.
STEP 9. Re-install the burner tray, log set and door.
STEP 10. Reconnect the gas line to the unit. Do a leak check using a soap and water solution or an approved manner on the gas supply line and the pilot tubing.
STEP 11. Re-light the appliance to insure proper operation and proper flame appearance. Be sure to adjust the venturi setting to achieve an efficient flame in the fireplace.
STEP 12. MAKE SURE that the sticker provided by S.I.T is installed to signify that this valve has been converted to a different type of fuel. Also make sure that the rating plate has a conversion label to show that this unit has been converted to a different fuel type.

A VISUAL CHECK OF THE REGULATOR KNOB IS NECESSARY TO DETERMINE WHETHER OR NOT THE REGULATOR IS THE CORRECT PART. A 50% TURN DOWN REGULATOR WILL HAVE ONLY ONE CORNER ON THE KNOB.

1 50% turn down HI-LOW Regulator w 3 T-20 Torx screws
1 T-20 tamper proof Torx screwdriver bit
1 pilot injector
1 Main orifice
1 Pilot assembly mounting gasket

	NATURAL GAS	PROPANE
Pilot Orifice.	.62mm	.35mm
Burner Orifice.	#43dms	#53dms
Venturi Settings	1/16" min	¼" min

WARRANTY

Because of our high standards Sherwood Industries Ltd. can offer a *Lifetime Warranty on all it's gas products. Covered under this warranty are Cabinet Sides, Tops, Pedestals, Surround Panels and Chassis. These steel components are covered against manufacture's defects for 5 years and labor for the first years and for parts only thereafter. Please refer to the warranty agreement for specific details on the coverage of your *Lifetime Warranty.

Sherwood Industries Ltd. offers a 5 year warranty against manufacturing defects on the following components, Heat Exchanger, Gold Plating, Log Set, Burners and Glass.

Sherwood Industries Ltd. offers a 2 year warranty on all Electrical Components, Gas Components, Paint and Corrosion Protection.

All claims under this warranty shall be made in writing by your dealer:

WHEN FILING A WARRANTY CLAIM PLEASE COMPLETE THE FOLLOWING INFORMATION ON AN OFFICIAL WARRANTY CLAIM FORM:

To the Dealer

- Name, address and telephone number of purchaser and date of purchase.
- Date of installation. Name of installer and dealer. Serial number of the appliance. Nature of complaint, defect or malfunction. Description and part # of any parts replaced.

To the Distributor

- **S**ign and verify that the work and information is correct.

This warranty covers defects in materials and workmanship only if the product has been installed according to the manual's instructions. If the product is damaged or broken as a result of misuse or mishandling, the warranty does not apply. The warranty does not cover removal and re-installation costs.

Sherwood Industries Ltd. reserves the right to repair or to replace the defective product. The shipping costs are paid by the consumer. All warranties by the manufacturer are set forth herein and no claim shall be made against the manufacturer on any oral warranty or representation.

Sherwood Industries Ltd. and its employees or representatives will not assume any damages, either directly or indirectly caused by improper usage, operation, installation, servicing or maintenance of this appliance.

Sherwood Industries Ltd. reserves the right to make changes without notice. Please complete and mail the warranty registration card and have the installer fill in the installation data sheet in the back of the manual for warranty and future reference.

PARTS LIST

EC-001	120° F Ceramic Temperature Sensor	EG28-108	Freestanding Pedestal
EC-002	220° F Ceramic Spill Switch	EG28-109	Freestanding Pedestal Door
EC-006	SIT Nova 820 NG Valve 50%	EG28-116A	Burner Tray Top (Post 2000)
EC-007	SIT Nova 820 LP Valve 50%	EG28-120	Freestanding DV Owner's Manual
EC-009	Thermocouple (Post 10/00)	EG28-121	Freestanding BV Owner's Manual
EC-011	Spark Electrode w/Cable	EG28-123	Freestanding Cabinet Side Panel
EC-012	Thermopile	EG28-124	Freestanding BV Stove Top
EC-013	Pilot NG w/Electrode	EG28-125	Firebox Baffle
EC-014	Pilot LP w/Electrode	EG28-126	Freestanding DV Stove Top
EC-015	Fully Assembled Pilot NG	EG28-131	DV Top Baffle
EC-016	Fully Assembled Pilot LP	EG28-132	BV Top Baffle
EC-019	Pilot Orifice NG	EG28-139	Wire Channel
EC-020	Pilot Orifice LP	EG28-140	Pedestal Wiring Plate
EC-021	Pilot Gasket	EG28-141	Pedestal Back
50-343	Orifice Blank - Front	EG28-143	Burner Complete w/Nova SIT Valve NG (Post March '00)
EC-023	S.I.T. Piezo Ignitor	EG28-145	Burner Complete w/Nova SIT Valve LP (Post March '00)
EC-024	SS Flex Connector with 3/8" Elbow 18" Long	EG28-150	Ash Sill
EC-025	Burner Switch (for Nova Tray)	EG28-161	Door Hinge Brackets
EC-029	Fan Access Cover Gasket	EG28-162	Door Latch Bracket
50-512	Convection Blower	EG28-169	BV 4" Crimped Flue Collar
EG28-304	Freestanding Fan Mounting Bracket	EG28-170	DV 4" Flared Flue Collar
EC-031	Miniature Light Bulb	EG28-201	LP to NG Conversion Kit (Post March '00)
EC-032	Freestanding Light Bulb Holder	EG28-203	NG to LP Conversion Kit (Post March '00)
EC-037	Freestanding Wiring Harness	EG28-152	Louver Bars (set of 3) – Painted
EF-045	Freestanding Fan Controller	EG28-153	Louver Bars (set of 3) – Gold
EC-040	Freestanding Fan Controller Knob	50-475	Louver Bars (set of 3) – Nickel
EC-043	IEC Power Cord 115 V	50-757	Outer Door Cover – Painted
EC-045	Embers	50-476	Outer Door Cover – Gold
EC-048	Log Set and Embers	50-477	Outer Door Cover – Nickel
EC-054	1 X 1 Side Cabinet Hinge		
EC-055	FPI Side Panel Magnet		
EC-056	Freestanding Pedestal Door Magnet		
EC-057	3/8 Tadpole Gasket		
EC-059	Door Latch Bolt		
EC-060	Simpson Dura Vent Adapter		
EC-061	Freestanding DV Vent Kit		
EC-064	Fan Impeller		
EC-065	Door Nut Mounting Bracket		
EC-066	Light Switch		
EC-067	Vent Restrictor Rings		
EG28-026	Side Panel Magnet		
EG28-027	Side Panel Magnet Bracket		
EG28-095	Latch Bracket and Nut		
EG28-103	Complete Inner Door with Glass		

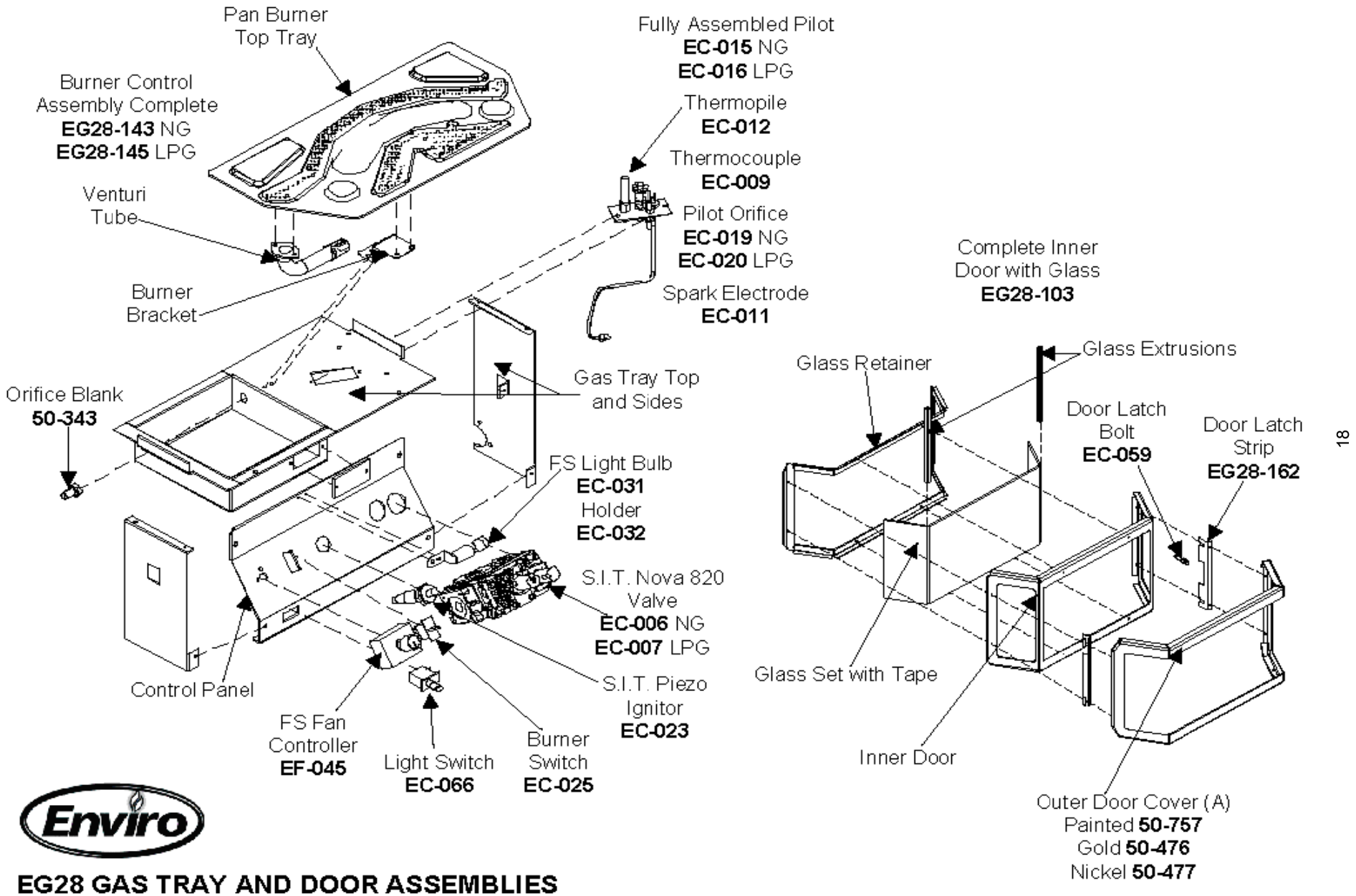

EG28 GAS TRAY AND DOOR ASSEMBLIES

Sept 2003

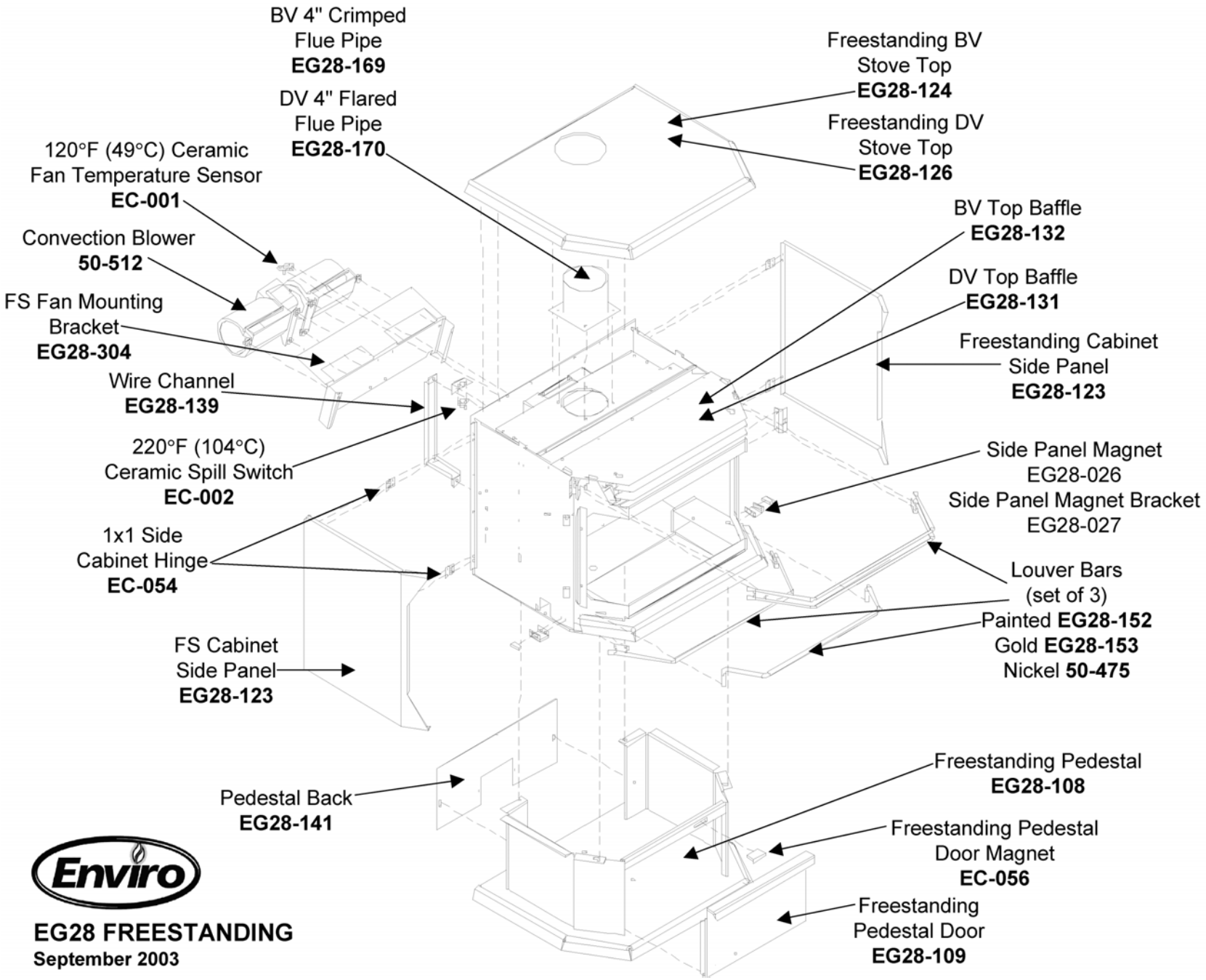

EG28 FREESTANDING
September 2003

INSTALLATION DATA SHEET

The following information must be recorded by the installer for warranty purposes and future reference.

Model: EG 28 B vented

Name of Owner:

_____

Address:

_____

_____

_____

Phone:_____

Name of Dealer:

_____

Address:

_____

_____

_____

Phone: _____

- Model :_____
- Serial Number: _____
- Date of Purchase:

_____/_____/_____

- Date of Installation:

_____/_____/_____

- ____ Natural Gas (Nat.), ____ Propane (LPG)
- Inlet Gas Supply Pressure: _____ in.w.c.

If the orifices were changed by the installer.

Main burner orifice

- Pilot Orifice # _____ or _____ in.Dia.

Installer's Signature

_____

Name of Installer:

_____

Address:

_____

_____

_____

Phone :_____

E-MAIL ADDRESS (www.envirofire.biz)

MANUFACTURED BY:
SHERWOOD INDUSTRIES, 6782 OLDFIELD ROAD, SAANICHTON, B.C., CANADA, V8M 2A3

September 18, 2003
C-10110