SHERWOOD INDUSTRIES IS AN ENVIRONMENTALLY RESPONSIBLE COMPANY. THIS MANUAL IS PRINTED ON RECYCLED PAPER.

PLEASE KEEP THESE INSTRUCTIONS FOR FUTURE REFERENCE

Enviro

PELLET STOVE

Windsor

OWNER'S MANUAL

CE 2003



Sherwood Industries Ltd.
Saanichton, Canada

DIN 18 891
P-BWU 10/00018

IBP
Fraunhofer Institut bauphysik

PLEASE READ THIS ENTIRE MANUAL BEFORE INSTALLATION AND USE OF THIS PELLET-BURNING ROOM HEATER. FAILURE TO FOLLOW THESE INSTRUCTIONS COULD RESULT IN PROPERTY DAMAGE, BODILY INJURY OR EVEN DEATH.

Contact your building or fire officials about restrictions and installation inspection requirements in your area.

50-835

Table of Contents

Introduction.....3
- Rating Label Location.....3
- Important Safty Data.....3
- Warnings and Recommendations.....3
- Automatic Safety Features of Stove.....4
- Pellet Quality.....4
- Dimensions.....5

Operating Instructions.....6
- Control Board Functions.....6
- Turning Your Pellet Stove On.....7
- Turning Your Pellet Stove Off.....7
- Slider/Damper.....7

Routine Cleaning and Maintenance.....8
Warranty.....10
Installation Data Sheet.....11

Introduction

Rating Label Location:

The rating label is located on the back of the hopper.

Important Safty Data:

This unit is designed to burn pelletized wood fuel only. Do not use any other type of fuel; this will void any warranties stated in this manual.

Since Sherwood Industries Ltd. has no control over the installation of your stove, we grant no warranty implied or stated for the installation or maintenance of your stove. Therefore, Sherwood Industries Ltd. assumes no responsibility for any consequential damage.

Warnings and Recommendations:

A. Do not abuse the glass by striking or slamming the door shut.

B. Do not attempt to operate the stove with broken glass.

C. Do not attempt to open the door and clean the glass while the unit is in operation. To clean the glass, use a soft cotton cloth and mild window cleaner, gas or wood stove glass cleaner or take a damp paper towel and dip into the fly ash. This is a very mild abrasive and will not damage the glass.

D. Do not use abrasive cleaners to clean the surface or any part of the stove.

E. It is recommended that the unit be secured into its' position in order to avoid any displacement.

F. Never use gasoline, gasoline-type lantern fuel, kerosene, charcoal lighter fluid, or similar liquids to start or "freshen up" a fire in the heater. Keep all such liquids well away from the heater while it is in use.

G. Disposed ashes should be placed in a metal container with a tight fitting lid. The closed container of ashes should be on a non-combustible floor on the ground, well away from all combustible materials pending final disposal. If the ashes are disposed of by burial in soil or otherwise locally dispensed, they should be retained in the closed container until all cinders have been thoroughly cooled. The ashes should be retained in the closed container until all cinders have thoroughly cooled before disposing of them.

H. Make sure the ash pan is closed tightly during the operation of the stove. Also ensure all gaskets on the door and ash pan are check and replaced if necessary.

I. Fresh-air intake is recommended. Failure to install intake air may result in the unit smoking during power failures as well as improper combustion.

J. A surge-protected power bar should be used to protect your controls from electrical spikes.

K. Smoke detectors should be installed in the structure when installing a pellet burning appliance.

KEEP ASH PAN FREE OF RAW FUEL. DO NOT PLACE UNBURNED OR NEW PELLET FUEL IN ASH PAN. A fire in the ash pan could be the result.

Introduction

Automatic Safety Features of Stove:

A. The stove will shut off when the fire goes out and the exhaust temperature drops below 120°F (49°C).

B. The stove has a high temperature safety switch. If the temperature on the hopper reaches 200°F (93°C), the auger will automatically stop and the stove will shut down when the exhaust temperature cools. If this happens, call your local dealer to reset the 200°F (93°C) high limit switch. **ALSO FIND THE REASONS WHY THE UNIT OVERHEATED.**

C. This unit has a convection fan control over-ride. This function causes the convection fan to reach its full speed when the temperature at the back of the firebox reaches 160° F (71° C). This is a normal safety feature of your unit.

Pellet Quality:

PELLET QUALITY IS IMPORTANT, PLEASE READ

YOUR ENVIRO PELLET STOVE HAS BEEN DESIGNED TO BURN WOOD PELLETS ONLY. DO NOT USE ANY OTHER TYPE OF FUEL, AS THIS WILL VOID ANY WARRANTIES STATED IN THIS MANUAL.

CAUTION: It is important to select and use only pellets that are dry and free of dirt or any impurities such as high salt content. Dirty fuel will adversely affect the operation and performance of the unit and will void the warranty. Ask your dealer for a recommended pellet type.

THE PERFORMANCE OF YOUR PELLET STOVE IS GREATLY AFFECTED BY THE TYPE AND QUALITY OF WOOD PELLETS BEING BURNED. AS THE HEAT OUTPUT OF VARIOUS QUALITY WOOD PELLETS DIFFERS, SO WILL THE PERFORMANCE AND HEAT OUTPUT OF THE PELLET STOVE.

Since Sherwood Industries Ltd. has no control over the quality of pellets that you use, we assume no liability for your choice in wood pellets.

ASH: The ash content of the fuel and operation of your stove will directly determine the frequency of cleaning. The use of high ash fuels may result in the stove needing to be cleaned daily. A low ash fuel may allow longer intervals between cleaning.

CLINKERING: [clinkers are silica (sand) or other impurities in the fuel that will form a hard mass during the burning process]. This hard mass will block the air flow through the Burn Pot Liner and affect the performance of the stove. Any fuel, even approved types may tend to clinker. Check the Burn-Pot Liner daily to ensure that the holes are not blocked with clinkers. If they become blocked, remove the liner (when the unit is cold) and clean/scrape the clinkers out. Clean the holes with a small pointed object if required. Refer to the section **Routine Cleaning and Maintenance**.

PELLET FEED RATES: Due to different fuel densities and sizes, pellet feed rates may vary. This may require an adjustment to the slider damper setting or to the auger feed trim setting on Low.

Store pellets at least 36” (1 m) away from the pellet stove.

Introduction

Dimensions:

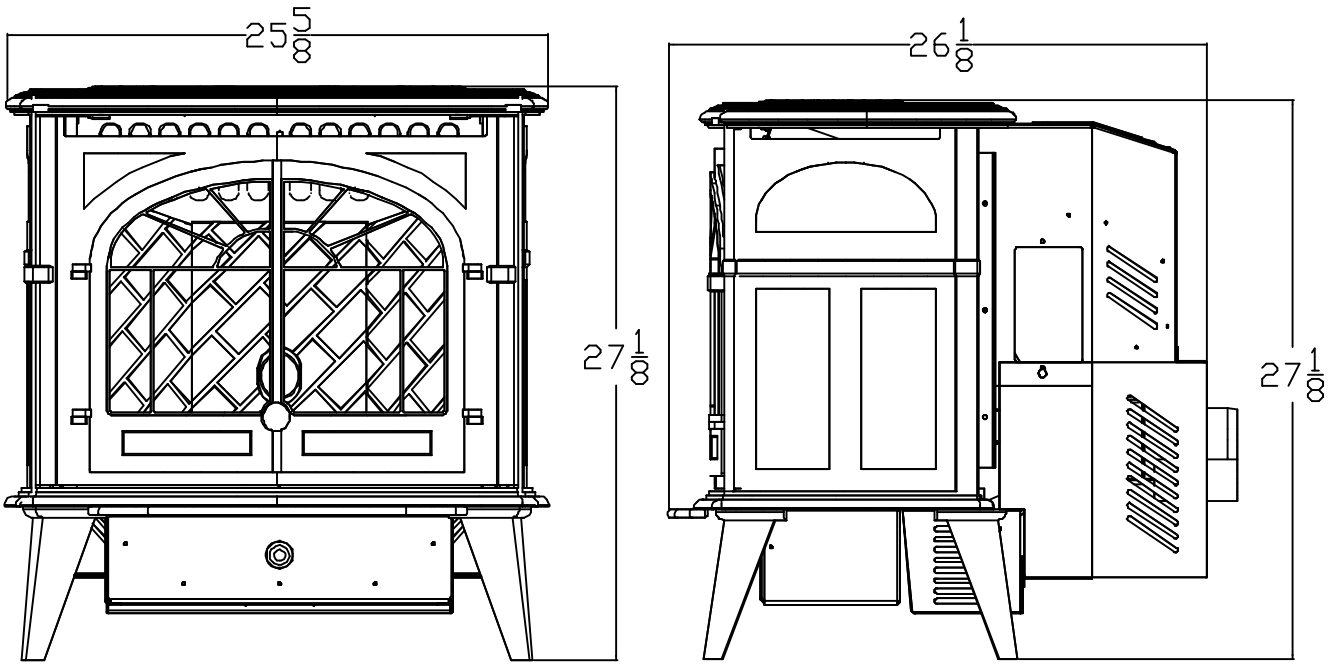

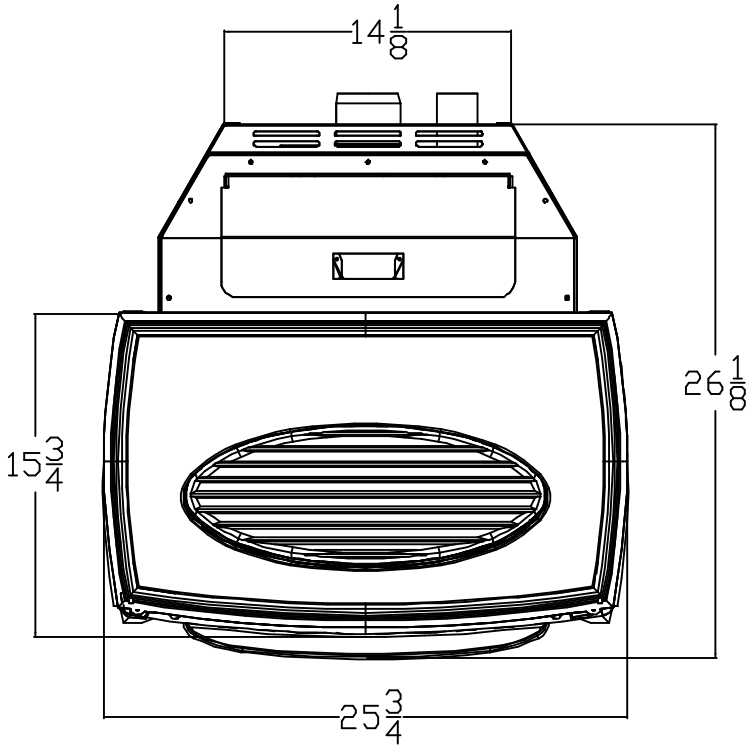

UNIT DIMENSIONS

HEIGHT: 27 1/8" (68.89 cm)
WIDTH: 25 5/8" (65.08 cm)
DEPTH: 26 1/8" (66.35 cm)

HEARTH PAD:

The floor protector must be non-combustible, extending beneath the stove the full width and depth of the unit including 6 " inches (15.2cm) in front for ember protection.

WIDTH: 25 1/8" (65.08 cm)
DEPTH: 32 1/8 " (81.59 cm)

Operating Instructions

Control Board Functions:

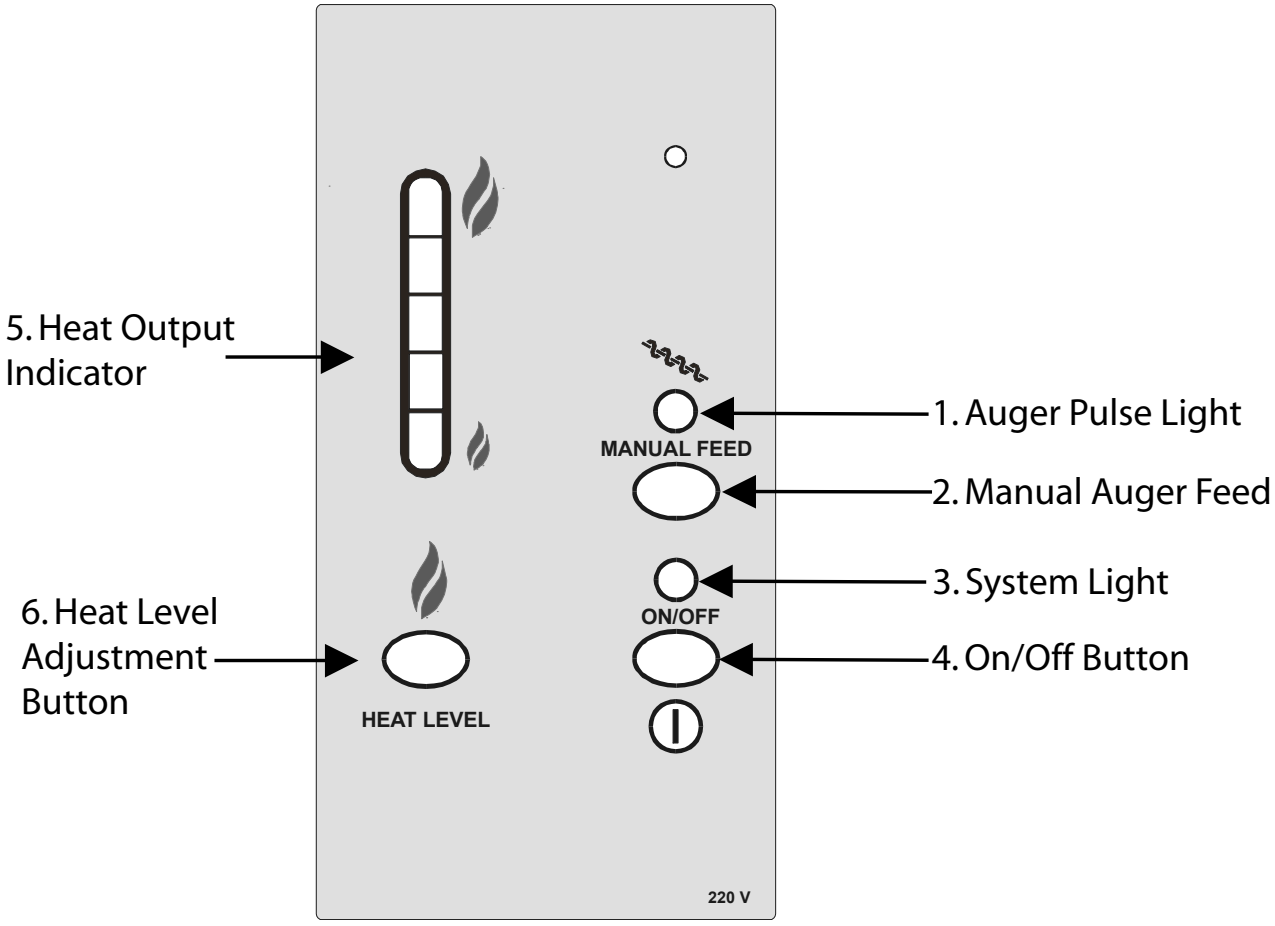

1. AUGER PULSE LIGHT:
This light will flash in conjunction with the auger.

2. MANUAL AUGER FEED:
If the unit runs out of fuel, this button can be used to "prime the auger system". This button will turn off after 60 seconds and then must be released and pressed again.

3. SYSTEM LIGHT:
Responsible for signaling the state of the control board. If flashing, the board is under control. If the light is solid, setting can be altered.

4. ON/OFF BUTTON:
Used to turn the unit ON and OFF.

5. HEAT OUTPUT INDICATOR:
Shows the present heat output setting.

6. HEAT LEVEL ADJUSTMENT:
When pressed, will change the heat setting of the unit from low to high.

Operating Instructions

Turning Your Pellet Stove On:

WITHOUT THERMOSTAT:

Ensure the hopper has sufficient fuel or pellets to start the unit.

1. Press the ON / OFF button (6) to start the appliance. System light (5) will flash, auger light (3) will flash with the pulse of the auger, heat level indicator will show with no control until the system light becomes solid.

2. If this is the first time the unit has been started or the unit has run out of fuel, press the Manual Auger Feed button (4) and hold down for 60 seconds. This will help "prime the auger" and deliver fuel to the burn pot and help light the unit quicker.

3. When a fire has been established, the system light will become solid, the auger light will continue to flash. The heat output button (8) can be pressed to achieve the desired heat setting.

Turning Your Pellet Stove Off:

To turn the unit OFF, simply press the ON / OFF button. All LED lights will go out. This will stop the feed of pellets. The blowers will continue to operate and cool the stove. When cool enough, the stove will shut down.

Slider/Damper:

Not for use in Germany.

If the fire should happen to go out and the heat output has been set on the lowest setting, then use the auger trim button to increase feed rate or the Slider Damper should be pushed in slightly, decreasing the air in the firebox.

If, after long periods of burning, the fire builds up and overflows the burn pot or there is a build up of clinkers This would be a sign that the pellet quality is poor and the slider damper must be pulled out to compensate.

Pulling the slider damper out gives the fire more air.

The easiest way to make sure that an efficient flame is achieved is to see the characteristics of the fire:
- A tall and lazy flame with dark orange tips requires more air – Open slider / damper up.
- A short and brisk flame, like a blowtorch, has too much air – Close slider / damper down.
- If the flame is in the middle of these two characteristics with a bright yellow/orange, active flame then the air is set for proper operation.

SPECIAL NOTES:

Pellet quality is a major factor in how the Pellet stove will operate. If the Pellets have a high moisture content or ash content the fire will be less efficient and has a higher possibility of the fire building up and creating clinkers (hard ash build-up).

Routine Cleaning And Maintenance

The following list of components should be inspected and maintained routinely to ensure that the appliance is operating at its' optimum and giving you excellent heat value:

2-3 DAYS/WEEKLY	SEASON or 2 TONS OF FUEL
Burn Pot and Liner	Exhaust Vent
Ash Pan	Fresh-air Intake Tube
Inside Firebox	Blower Mechanisms
Door Glass	Heat exchanger tubes
Heat exchanger tubes	Behind firebox liners
Ash pan and Door gaskets	All Hinges
Door Latch	Post Season Clean-up

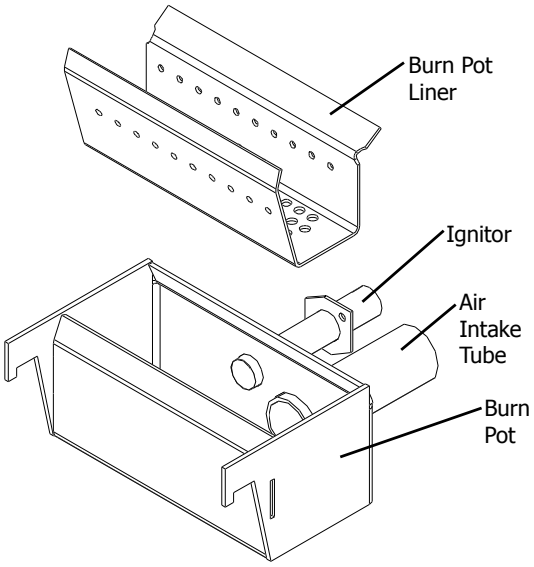

TOOLS REQUIRED TO CLEAN UNIT
Torx T-20 Screwdriver, 5/16" Wrench or Socket, Brush, Soft Cloth, Vacuum with fine filter bag.

BURN POT AND LINER (2-3 days)
This is the 'pot' where the pellets are burned. The Burn Pot and Liner should be inspected every two to three days, to ensure proper air flow through the liner**. Failure to keep the liner clean may cause a build up of fuel past the burn pot liner and up the drop tube. This will cause the auger to jam and may result in pellets burning in the drop tube and hopper**. Open the door using the door handle provided, located on the right-hand side of the stove. Swing the door open. Remove the burn-pot liner from the stove. Using a metal scraper, remove material that has accumulated or is clogging the liner's holes. Then dispose of the scrapped ashes from the liner and from inside the burn-pot. Place the burn-pot back into the stove, making sure that the pipes are properly inserted into the burn pot. Place the liner back into the burn-pot, making sure that the ignitor hole in the liner is aligned with the ignitor tube. Pushing the liner up against the ignitor tube.

- If after long periods of burning the fire continually builds up and overflows the burn pot or there is a build up of clinkers, this is an indication that the pellet fuel quality is poor or the stove may need cleaning. Check the stove for ash build up (clean if required) and adjust the Slider / Damper to produce the proper clean combustion.

ASH PAN AND DOOR GASKETS (weekly)
After excessive use, the gasket may come loose. To repair this, glue the gasket on using high-temperature fiberglass gasket glue available from your local ENVIRO dealer. This is important to maintain an airtight assembly.

ASH PAN (weekly)
This part is located under the burner. To remove the ash pan, simply turn the knob and pull out towards the front. Dump the ashes into a metal container stored away from combustibles. Monitor the ash level every week. Remember that different pellet fuels will have different ash contents. Ash content is a good indication of fuel efficiency and quality. Refer to "Warnings and Recommendations" for disposal of ashes.
DO NOT PLACE UNBURNED OR RAW PELLET FUEL IN ASH PAN.

Routine Cleaning And Maintenance

HEAT EXCHANGER TUBES (weekly)
A rod is located under the unit top, in the center of the stove just behind the door. This handle is to be pushed in and out a few times **(ONLY WHEN THE UNIT IS COLD)** in order to clean away any fly ash that may have collected on the heat exchanger tubes. As different types of pellets produce different amounts of ash, cleaning of the tubes should be done on a regular basis to enable the unit to run efficiently.

FRESH AIR INTAKE (season)
Inspect periodically to be sure that it is not clogged with any foreign materials.

EXHAUST PASSAGES (season)
Removal of the firebox backing for bi-annual cleaning:

- Open the door by lifting the handle. Remove the burn pot and burn pot liner.
- Lubricate all screws with penetrating oil.
- Remove the four screws that hold the Brick liner retainers in place. Remove Side Brick liner by sliding forward then out.
- Pull the center panel out.
- Vacuum thoroughly.

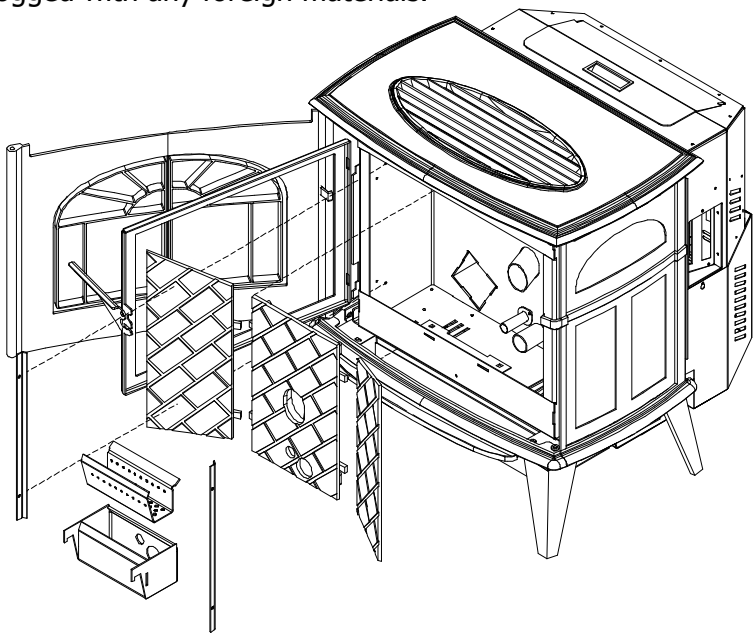

Installation of firebox backing

- Insert center panel with backing.
- Place the two side panels back into the firebox and reinstall the two retainers using two screws on each side.
- Replace the burn pot and burn pot liner
- Close the glass door and secure.
- Clean thoroughly.

EXHAUST VENT(season)
This vent should be cleaned every year or after two tons of pellets. We recommend contacting your dealer for professional cleaning. To clean the vent pipe, tap lightly on the pipe to dislodge any loose ash. Open the bottom of the "T" to dump the ash, then vacuum as much of the ash out of the vent pipe as possible.

DOOR GLASS
It is recommended that your dealer replace the glass if broken.
The door glass is made of high temperature PYRO CERAMIC 5 mm thick. The center panel is 18.5 x 13.5 inches (46.99 cm x 34.29 cm) and must be replaced with (PART # 20-023). Substitute materials will not be permitted.

POST SEASON CLEAN-UP
Once you are finished using the pellet appliance for the season, unplug the stove for added electrical protection. It is very important that the stove be cleaned and serviced as stated above.

Warranty

Sherwood Industries Ltd. gives a five year limited warranty on all steel manufactured parts. A one-year warranty is provided on all electrical components. The above limited warranties are extended only to the original purchaser.

There is no warranty on the following parts:

- Fiberglass rope baskets
- refractory material
- burn pot liner
- paint
- enamel finish or gold plating where it applies
- vacuum hose.

****NOTE:** The paint on the brick firebox lining may peel. This is due to the extreme conditions applied to the paint and is in no way covered under warranty.

WHEN FILING A WARRANTY CLAIM PLEASE COMPLETE THE FOLLOWING INFORMATION ON AN OFFICIAL WARRANTY CLAIM FORM:

TO THE DEALER:

- Name, Address and Telephone Number of purchaser and date of purchase.
- Date of Installation. Name of the installer and dealer. Serial Number of the appliance. Nature of the compliant, defects or malfunction, description and part # of any parts replaced.

TO THE DISTRIBUTOR:

- Sign and verify that work and information are correct.

ENSURE THAT YOU SPECIFY THE NATURE OF THE COMPLAINT, DEFECT, PERIODICAL MALFUNCTION, ETC.

The limited warranty covers defects in materials and workmanship as long as the products has been installed according to the manual's instruction. If the product is damaged or broken as a result of mishandling or misuse, the warranty does not apply. Removal and re-installation costs are not covered under this warranty.

It is the manufacturer's option whether to repair or replace the appliance. The shipping cost to and from the factory is paid by the consumer. All warranties by the manufacturer are set forth herein and no claim shall be made against the manufacturer on any oral warranty or representation.

Sherwood Industries Ltd. assumes no responsibility for damage caused by household power fluctuations or power surges.

For the do-it-yourself Individual

The consumer should be aware that the pellet appliance needs setting using tools that he/she might not have. Consult an ENVIRO dealer. It is recommended than only an authorized ENVIRO dealer installs an ENVIRO unit. There will be no warranty coverage on parts destroyed or burnt out as a result of a consumer installation error or defect.

Sherwood Industries Ltd. reserves the right to make changes without any notice.

Installation Data Sheet

The following information must be recorded by the installer for warranty purposes and future reference.

NAME OF OWNER:

_____

ADDRESS:

_____

_____

_____

PHONE:_____

NAME OF DEALER:

_____

ADDRESS:

_____

_____

_____

PHONE:_____

MODEL:_____

SERIAL NUMBER:_____

DATE OF PURCHASE: _____ (dd/mm/yyyy)

DATE OF INSTALLATION:_____(dd/mm/yyyy)

MAGNEHELIC AT INSTALL:_____

INSTALLER'S SIGNATURE:

_____

NAME OF INSTALLER:

_____

ADDRESS:

_____

_____

_____

PHONE:_____

MANUFACTURED BY:
SHERWOOD INDUSTRIES LTD.
6782 OLDFIELD RD. SAANICHTON, BC, CANADA V8M 2A3
www.envirofire.biz
November 14, 2003
C-10165