SHERWOOD INDUSTRIES IS AN ENVIRONMENTALLY RESPONSIBLE COMPANY. THIS MANUAL IS PRINTED ON RECYCLED PAPER.

PLEASE KEEP THESE INSTRUCTIONS FOR FUTURE REFERENCE

Enviro

PELLET STOVE

Windsor

TECHNICAL MANUAL

CE 2003

Sherwood Industries Ltd.
Saanichton, Canada

DIN 18 891
P-BWU 10/00018

IBP

Fraunhofer Institut bauphysik

PLEASE READ THIS ENTIRE MANUAL BEFORE INSTALLATION AND USE OF THIS PELLET-BURNING ROOM HEATER. FAILURE TO FOLLOW THESE INSTRUCTIONS COULD RESULT IN PROPERTY DAMAGE, BODILY INJURY OR EVEN DEATH.

Contact your building or fire officials about restrictions and installation inspection requirements in your area.

50-836

Table of Contents

Introduction.....3
- Rating Label Location.....3
- Important Safety Data.....3
- Safety Warnings And Recommendations.....3

Operating Instructions.....5
- Thermostat Installed.....5
- Turning Your Pellet Stove Off.....5
- Slider/Damper Installation and Operation.....6

Installation.....7
- Deciding Where to Locate Your Pellet Appliance.....7
- Dimensions.....7
- Exhaust and Fresh-Air Intake.....8
- Removing Your New Stove From The Pallet.....8
- Vent Termination Requirements.....9
- Clearances to Combustibles.....10
- Alcove Clearances.....10
- Horizontal Through Wall Installation.....11
- Straight Through Wall Installations.....12
- Through Wall With Vertical Rise Installations.....12
- Vertical Installation.....13
- Hearth Mount Installation.....14
- Exterior Mounted Exhaust Blower.....15
- Typical Through Wall Outside Termination Intallation.....16
- Through Wall Vertical Intallation.....17

Troubleshooting.....18
Wiring Diagram.....20
Parts List.....21
Parts Diagram - Components.....22
Parts Diagram - Steel.....23
Warranty.....24
Installation Data Sheet.....25

Introduction

Rating Label Location:

The rating label is located on the back of the hopper.

Important Safety Data:

To prevent the possibility of a fire, this appliance must be properly installed by following the installation instructions. Please read this entire owner's manual before installing or operating your ENVIRO pellet stove. Failure to follow these instructions may result in property damage, bodily injury, or even death. Contact your local building or fire officials to obtain a permit and anyinformation on any installation restrictions and inspection requirements for your area.

An ENVIRO dealer will be happy to assist you.

THE STOVE'S EXHAUST SYSTEM WORKS WITH NEGATIVE COMBUSTION CHAMBER PRESSURE AND A SLIGHTLY POSITIVE CHIMNEY PRESSURE.

IT IS VERY IMPORTANT TO ENSURE THAT THE EXHAUST SYSTEM BE SEALED AND IS AIRTIGHT.

Safety Warnings And Recommendations:

Fuel: This pellet stove is designed and approved to only burn wood pellet fuel with up to 3% ash content. Dirty fuel will adversely affect the operation and performance of the unit and may void the warranty. Check with your dealer for fuel recommendations.

THE USE OF CORDWOOD IS PROHIBITED BY LAW.

Soot: Operation of the stove with insufficient combustion air will result in the formation of soot which will collect on the glass, the heat exchanger, the exhaust vent system and may stain the outside of the house. This is a dangerous situation and is inefficient. Frequently check your stove and adjust the slider/damper as needed to ensure proper combustion. **See: "Operation - Slider/Damper"**

Cleaning: There will be some build up of fly ash and small amounts of creosote in the exhaust. This will vary due to the ash content of the fuel used and the operation of the stove. It is advisable to inspect and clean the exhaust vent annually or every two tons of pellets.

Ashes: Disposed ashes should be placed in a metal container with a tight fitting lid. The closed container of ashes should be on a non-combustible floor on the ground, well away from all combustible materials pending final disposal. If the ashes are disposed of by burial in soil or otherwise locally dispensed, they should be retained in the closed container until all cinders have been thoroughly cooled.

Electrical: THE USE OF A SURGE PROTECTED POWER BAR IS RECOMMENDED.
The maximum power requirement is 700 watts (3.1 amp). The stove has a grounded electrical cord and should be connected to a standard 240 volt, 50-Hz grounded electrical outlet. Make sure the electrical cord is not trapped under the appliance and that it is clear of any hot surfaces or sharp edges. When installing the stove in a mobile home, it must be electrically grounded to the steel chassis of the home and bolted to the floor in accordance with applicable local, state or federal codes.

Introduction

Glass: Do not abuse the glass by striking or slamming the door. Do not attempt to operate the stove with broken glass. The stove uses ceramic glass. Replacement glass must be purchased from an ENVIRO dealer. Do not attempt to open the door and clean the glass while the unit is in operation or if glass is hot.

Flammable Liquids: **Never** use gasoline, gasoline-type lantern fuel, kerosene, charcoal lighter fluid, or similar liquids to start or "freshen up" a fire in the heater. Keep all such liquids well away from the heater while it is in use.

Smoke Detector: Smoke detectors should be installed and maintained in the structure when installing and operating a pellet burning appliance.

Operation: The ash pan and door must be closed securely for proper and safe operation of the pellet stove. Also ensure all gaskets on the door are checked and replaced when necessary.

KEEP ASH PAN FREE OF RAW FUEL.

DO NOT PLACE UNBURNED OR NEW PELLET FUEL IN ASH PAN. A fire in the ash pan may occur.

Installation: Be sure to maintain the structural integrity of your home when passing a vent through walls, ceilings, or roofs.

DO NOT INSTALL A FLUE DAMPER IN THE EXHAUST VENTING SYSTEM OF THIS UNIT.

DO NOT CONNECT THIS UNIT TO A CHIMNEY FLUE SERVING ANOTHER APPLIANCE.

Fresh air: Must be connected to all units installed in Mobile Homes as well as "Air Tight Homes" (R2000). Fresh air intake is recommended on all installations. Failure to install intake air may result in poor performance, smoke, property damage, house fire, bodily injury or death under certain conditions.

If you have any questions with regards to your stove or the above-mentioned information, please feel free to contact your local dealer for further clarification and comments.

SINCE SHERWOOD INDUSTRIES LTD. HAS NO CONTROL OVER THE INSTALLATION OF YOUR STOVE, SHERWOOD INDUSTRIES LTD. GRANTS NO WARRANTY IMPLIED OR STATED FOR THE INSTALLATION OR MAINTENANCE OF YOUR STOVE. THEREFORE, SHERWOOD INDUSTRIES LTD. ASSUMES NO RESPONSIBILITY FOR ANY CONSEQUENTIAL DAMAGE(S).

SAVE THIS INSTRUCTION MANUAL FOR FUTURE REFERENCE

Operating Instructions

Thermostat Installed:

This control board can be placed into two different thermostat modes: when the jumper is not placed on both pins of J9 then the control board is in a HI / LOW mode of thermostat operation(factory setting). If both pins of J9 are jumped then the control board is in an ON / OFF mode of thermostat operation.

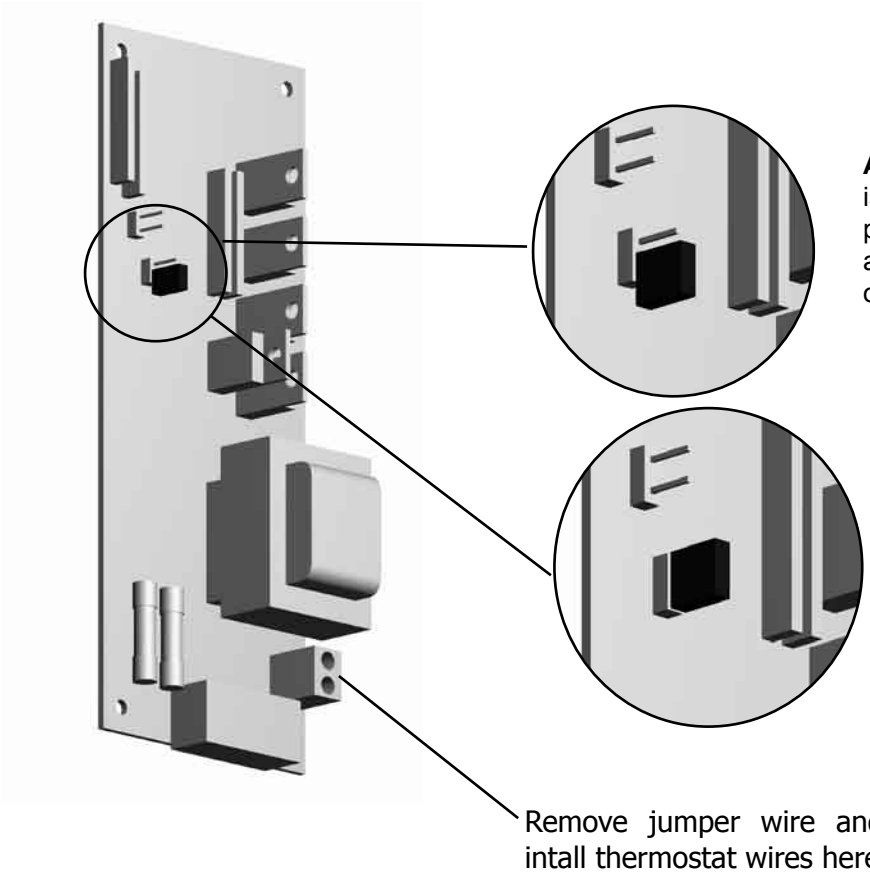

A) HI / LOW: when the jumper is placed on only one of the J9 pins, then the control board is in a HI / LOW mode of thermostat operation (factory setting).

B) ON / OFF: If both pins of J9 are jumped (covered) then the control board is in an ON / OFF mode of thermostat operation

1. Install the thermostat in a location that is not too close to the unit but will effectively heat the desired area.

2. Install a 12 or 24 Volt Thermostat using an 18 x 2 gauge wire from the unit to the thermostat.

3. If the unit has been placed in the HI / LOW mode, the unit will be taken to a low or idle setting when the thermostat is not calling for heat. When the thermostat calls for heat, the unit will go to the setting that is displayed on the control board Heat Indicator.

4. If the unit has been placed in the ON /OFF thermostat mode, the unit will shut OFF when the thermostat is not calling for heat. When the thermostat calls for heat, the unit will go through an ignition sequence once again and relight.

Turning Your Pellet Stove Off:

To turn the unit OFF, simply press the ON / OFF button. All LED lights will go out. This will stop the feed of pellets. The blowers will continue to operate and cool the stove. When cool enough, the stove will shut down.

Operating Instructions

Slider/Damper Installation and Operation:

This is used to regulate the airflow through the pellet stove.

A Qualified Service Technician or Installer should set the Slider Damper. This slider damper should be set only on a hot stove (30 minutes or more) by placing a Magnehelic Pressure Gauge in the firebox (test port located in the center of the stoves just below the door opening). Set the slider damper so that the pressure is 12” WC (.029 Kpa)

The Slider Damper has been pre-set at the factory for German test pellet fuel.

The slider damper is located behind the left side panel. Undo the two T-20 torx screws that hold the inspection cover on the left side and remove.

The combustion exhaust blower is a variable speed blower controlled by the heat output button.

If the fire should happen to go out and the heat output has been set on the lowest setting, then use the auger trim button to increase feed rate or the Slider Damper should be pushed in slightly, decreasing the air in the firebox.

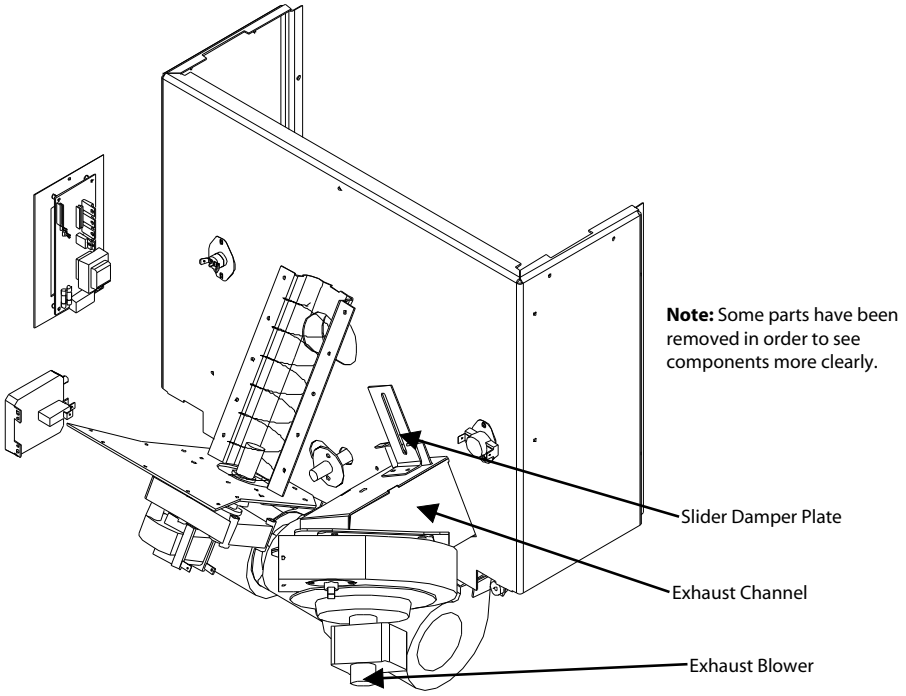

If, after long periods of burning, the fire builds up and overflows the burn pot or there is a build up of clinkers, this would be a sign that the pellet quality is poor and the slider damper must be pulled out to compensate.

Pulling the slider damper out gives the fire more air.

The easiest way to make sure that an efficient flame is achieved is to see the characteristics of the fire:
- A tall and lazy flame with dark orange tips requires more air – Open slider / damper up.
- A short and brisk flame, like a blowtorch, has too much air – Close slider / damper down.
- If the flame is in the middle of these two characteristics with a bright yellow/orange, active flame then the air is set for proper operation.

SPECIAL NOTES:

Pellet quality is a major factor in how the Pellet stove will operate. If the Pellets have a high moisture content or ash content the fire will be less efficient and has a higher possibility of the fire building up and creating clinkers (hard ash build-up).

Installation

Deciding Where to Locate Your Pellet Appliance:

1. Check clearances to combustibles.

2. Do not obtain combustion air from an attic, garage, or any unventilated space. Combustion air may be obtained from a ventilated crawlspace.

3. Do not install the stove in a bedroom.

4. You can vent the stove through an exterior wall behind the unit or connect it to an existing masonry or metal chimney (must be lined if the chimney is over 6" in diameter, or over 28 sq. inches cross sectional area). An interior vent can be used with approved pipe passing through the ceiling and roof.

5. Locate the stove in a large and open room that is centrally located in the house. This will optimize heat circulation.

6. The power cord is 8 feet (2.43 m) long and may require a grounded extension cord to reach the nearest electrical outlet.

Dimensions:

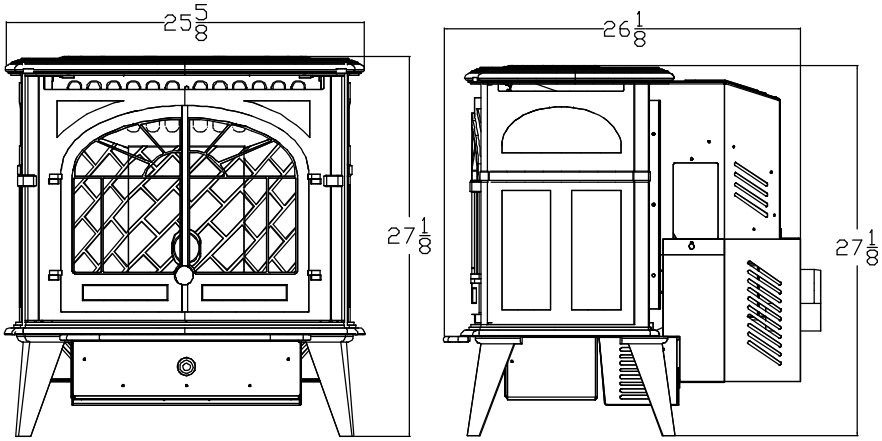

UNIT DIMENSIONS

HEIGHT: 27 1/8" (68.89 cm)
WIDTH: 25 5/8" (65.08 cm)
DEPTH: 26 1/8" (66.35 cm)

HEARTH PAD:

The floor protector must be non-combustible, extending beneath the stove the full width and depth of the unit including 6 " inches (15.2cm) in front for ember protection.

WIDTH: 25 1/8" (65.08 cm)
DEPTH: 32 1/8 " (81.59 cm)

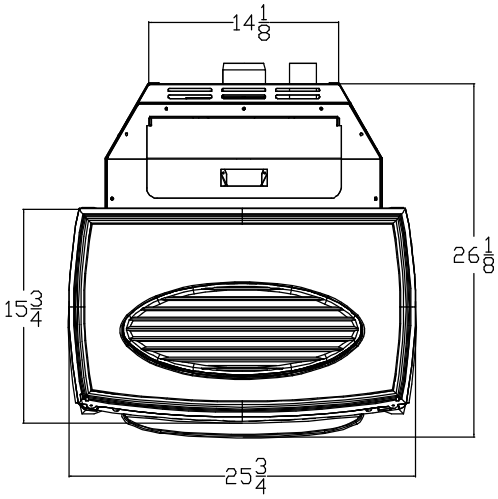

Installation

Removing Your New Stove From The Pallet:

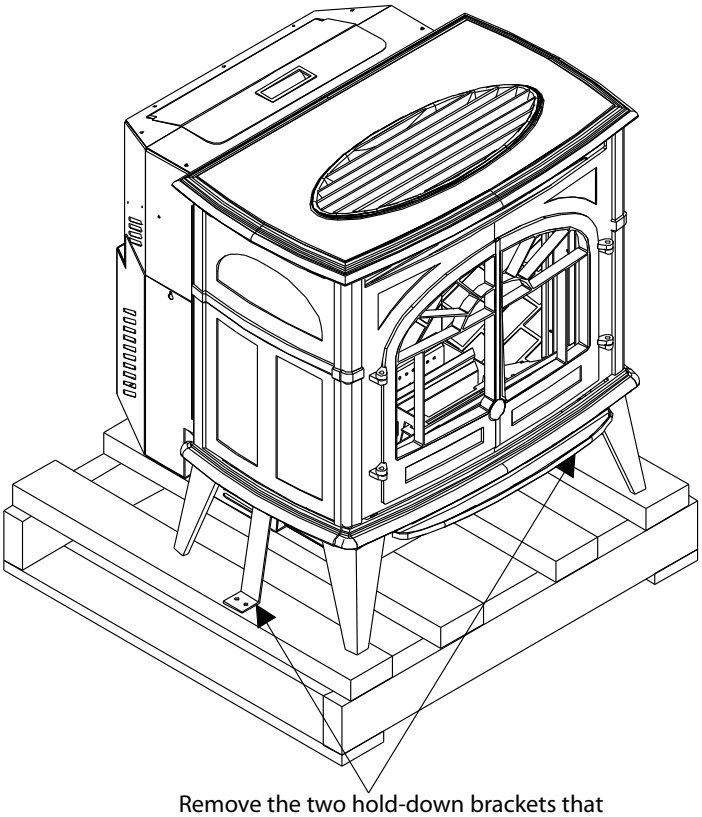

Remove the two hold-down brackets that secure the ***Windsor*** to the pallet. Lift the brackets up to unhook from the chassis.

Exhaust and Fresh-Air Intake:

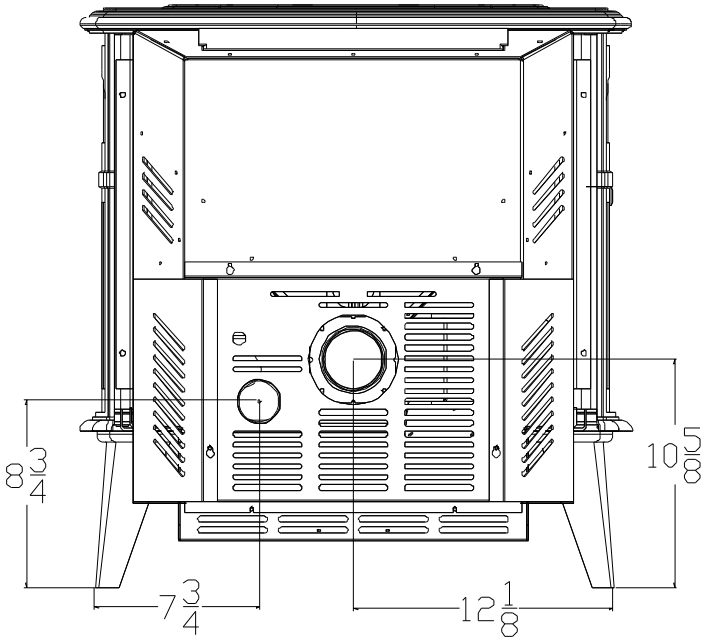

INTERIOR MOUNTED EXHAUST BLOWER.

Base to center of flue 10 ⅝ in. (26.98 cm)
Side to center of flue 12 ⅛ in. (30.80 cm)

FRESH AIR INTAKE.

Base to center of intake 8 ¾ in. (22.22 cm)
Side to center of intake 7 ¾ in. (19.68 cm)

Outside fresh-air is mandatory when installing this unit in airtight homes and mobile homes. When connecting to an outside fresh air source, do not use plastic, combustible pipe. Only 2” ID (inside diameter) steel, aluminum or copper pipe should be used. It is recommended, when you are installing a fresh-air system, to keep the number of bends in the pipe to a minimum.

VENT TERMINATION REQUIREMENTS:

1. Do not terminate the vent in any enclosed or semi-enclosed areas such as a carport, garage, attic, crawlspace, narrow walkway, closely fenced area, under a sundeck or porch, or any location that can build up a concentration of fumes such as stairwells, covered breezeway, etc.

2. Vent surfaces can become hot enough to cause burns if touched by children. Non-combustible shielding or guards may be required.

3. Termination must exhaust above the inlet elevation. It is recommended that at least five feet of vertical pipe be installed outside when the appliance is vented directly through a wall, to create some natural draft to prevent the possibility of smoke or odor during appliance shut-down or power failure. This will keep exhaust from causing a nuisance or hazard from exposing people or shrubs to high temperatures, the safest and preferred venting method is to extend the vent through the roof vertically.

4. Vent terminal cannot be:
- less than 4 feet (1.2 m) below
- less than 4 feet (1.2 m) horizontally from, and
- less than 1 foot (305 mm) above doors, window openings, or gravity/ventilation air inlet into building.

5. Distance from bottom termination and grade –12" (305 mm) minimum. This is conditional upon the plants and nature of grade surface. The exhaust gases are hot enough to ignite grass, plants and shrubs located in the vicinity of termination. The grade surface must not be lawn. Distance from bottom of termination and public walkways is 7 feet (2.1 m) minimum.

6. Distance to combustible materials is 2 feet (610 mm). This includes adjacent buildings, fences, protruding parts of the structure, roof overhang, plants, shrubs, etc.

7. If the unit is incorrectly vented or the air-to-fuel mixture is out of balance, a slight discoloration of the exterior of the house might occur. Since these factors are beyond the control of Sherwood Industries Ltd, we grant no guarantee against such incidents.

IT IS RECOMMENDED THAT YOUR PELLET STOVE BE INSTALLED BY AN AUTHORIZED DEALER/INSTALLER.

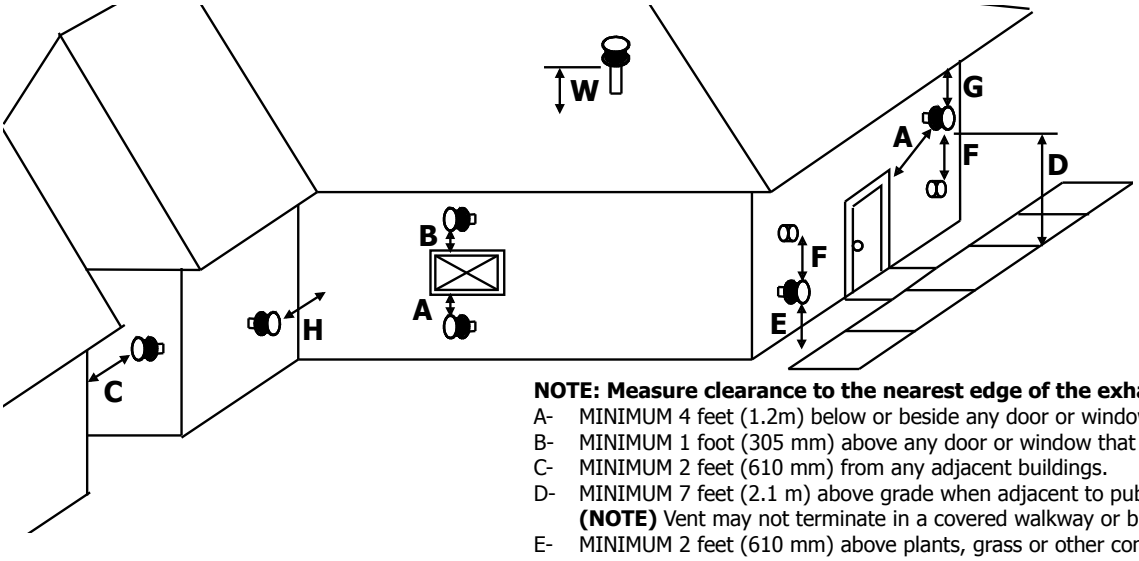

NOTE: Measure clearance to the nearest edge of the exhaust hood

A- MINIMUM 4 feet (1.2m) below or beside any door or window that opens.
B- MINIMUM 1 foot (305 mm) above any door or window that opens.
C- MINIMUM 2 feet (610 mm) from any adjacent buildings.
D- MINIMUM 7 feet (2.1 m) above grade when adjacent to public walkways.
(NOTE) Vent may not terminate in a covered walkway or breezeway.
E- MINIMUM 2 feet (610 mm) above plants, grass or other combustible materials.
F- MINIMUM 3 feet (915 mm) from any forced air intake of other appliances.
G- MINIMUM 2 feet (610 mm) below any eave or roof overhangs.
H- MINIMUM 1 foot (305 mm) clearance to a combustible wall.
W- MINIMUM 2 feet (610 mm) above the roof.

CLEARANCES TO COMBUSTIBLES:

This unit MUST BE installed on a noncombustible hearth pad, extending the full width of the unit. The hearth must extend 6 inches in front of the unit for ember protection.

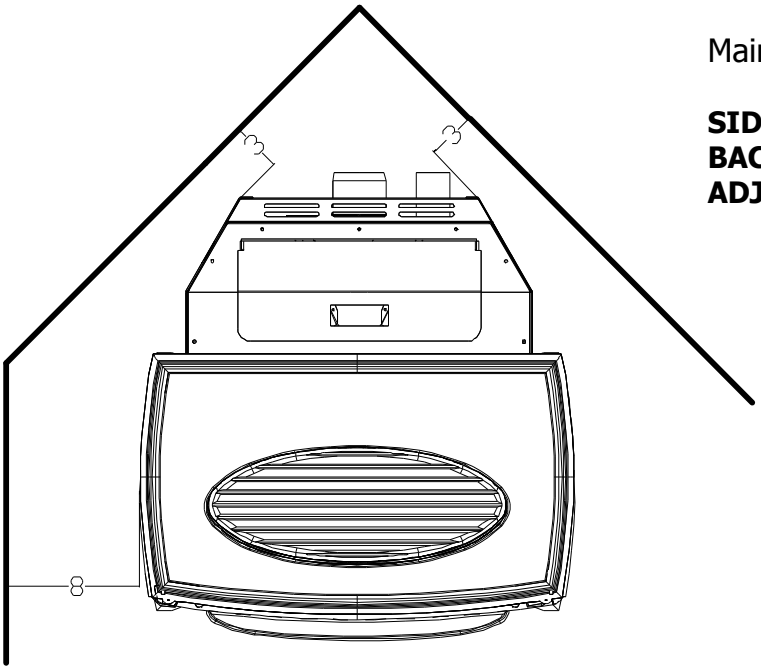

Maintain these clearances to combustibles.

SIDE WALL TO UNIT	8 INCHES (203 MM)
BACK WALL TO UNIT	3 INCHES (76 MM)
ADJACENT WALL	3 INCHES (76 MM)

ALCOVE CLEARANCES:

This unit may be installed in an alcove. Maintain these clearances to combustibles.

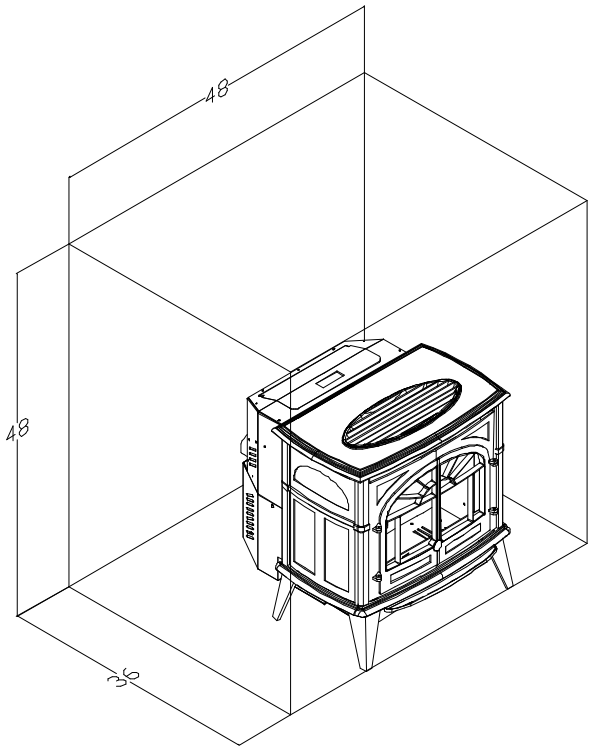

MIN. ALCOVE WIDTH	48 INCHES (122 cm)
MIN. ALCOVE HEIGHT	48 INCHES (122 cm)
MIN. ALCOVE DEPTH	36 INCHES (91.5 cm)

Install vent at clearances specified by the vent manufacturer.

Installation

Horizontal Through Wall Installation:

The **ENVIRO** *WINDSOR* can be vented through the wall using two different methods. Only use vent of (L or PL) type with an inside diameter of 3" or 4" (7.6 or 10.1 cm)
VENT INSTALLATION: **INSTALL VENT AT CLEARANCES SPECIFIED BY THE VENT MANUFACTURER.**
A chimney connector shall not pass through an attic or roof space , closet or similar concealed spaces, or a floor, or ceiling. Where passage through a wall, or partition of combustible construction is desired, the installation shall conform to CAN/CSA-B365, Installation Code for Solid-Fuel-Burning Appliances and Equipment.

1. Choose a location for your stove that meets the requirements stated in this manual and allows installation with the least amount of interference to house framing, plumbing, wiring, etc.
2. Place the appliance 15" (37.5 cm) away from the wall. If the stove is to be set on a hearth pad, set the unit on it.
3. Locate the center of the exhaust pipe on the stove. Extend that line to the wall. Once you have located the center point on the wall, use a hole saw to cut a 7" (175 mm) diameter hole for a 3" (76 mm) vent pipe or an 8" (200 mm) hole for a 4" (101 mm) vent pipe.
4. Install the wall thimble as per the instructions written on the thimble. Maintain a proper vapor barrier seal.
5. Install a length of 3" (76 mm) or 4" (101 mm) vent pipe into the wall thimble. The pipe should install easily into the thimble.
6. Install the fresh air intake.
7. Connect the exhaust vent pipe to the exhaust pipe on the stove. Seal all connections with high temperature silicone
8. Push the stove straight back, leaving a minimum of 3" (7.6 cm) clearance from the back of the stove to the wall. Seal the vent pipe to the thimble with high temperature silicone.
9. The pipe must extend at least 12"(30 cm) away from the building. If necessary, bring another length of pipe (PL type) to the outside of the home to connect to the first section. Do not forget to place high temperature silicone around the pipe that passes through the thimble.
10. Install a vertical pipe, or if all requirements for direct venting are met, install vent termination. The stainless steel cap termination manufactured by the vent manufacturer is recommended. However, when the vent terminates several feet above ground level and there are no trees, plants, etc. within several feet, a 45° elbow with rodent screen can be used as a termination. The elbow must be turned down to prevent rain from entering.

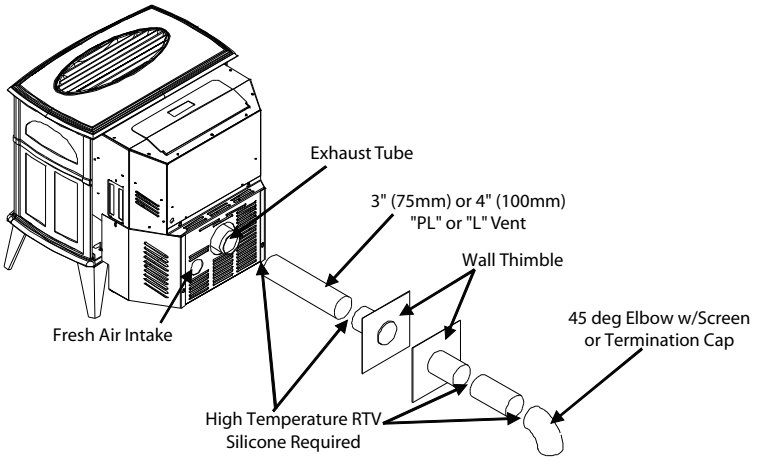

NOTE:
- Some horizontal through wall installations may require a "T" and a 3 to 5 ft length of vertical pipe outside the building to help natural draft in the unit.
- This may be required if a proper burn cannot be maintained, after the stove has been tested and the airflow set.
- This is due to the backpressure in the exhaust caused by airflow around the structure.
- All sections of pipe must have three (3) screws evenly spaced and all horizontal vent sections must have a bead of high temperature silicone installed on the male end of the pipe before installation to create a gastight seal.

Straight Through Wall Installations:

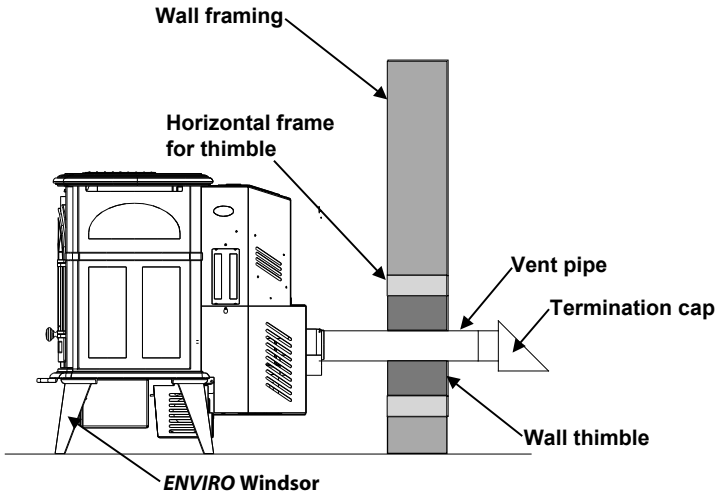

The termination must be 12 inches (30 cm) from the outside wall and 12 inches (30 cm) above the ground.

A 45° elbow with a rodent screen may be used in place of the termination cap (or stainless steel termination hood).

Through Wall With Vertical Rise Installations:

A 45° elbow with a rodent screen may be used in place of the termination cap (or stainless steel termination hood).

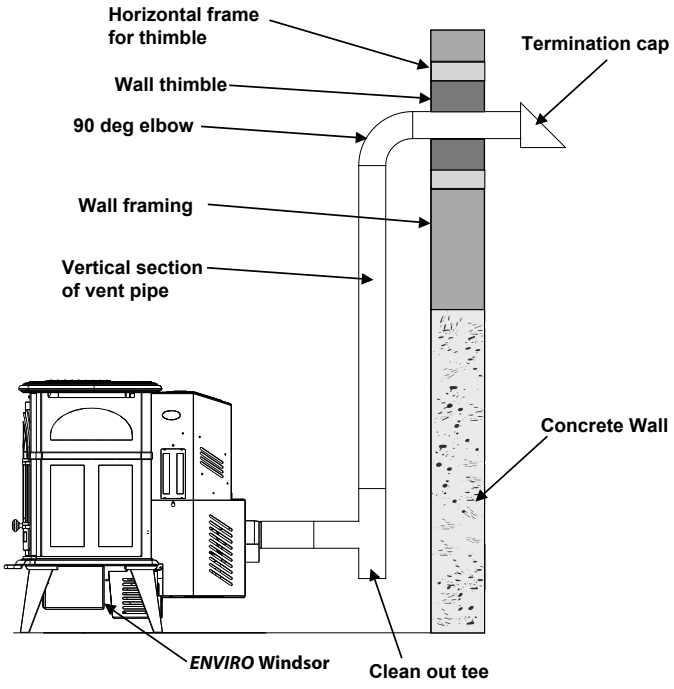

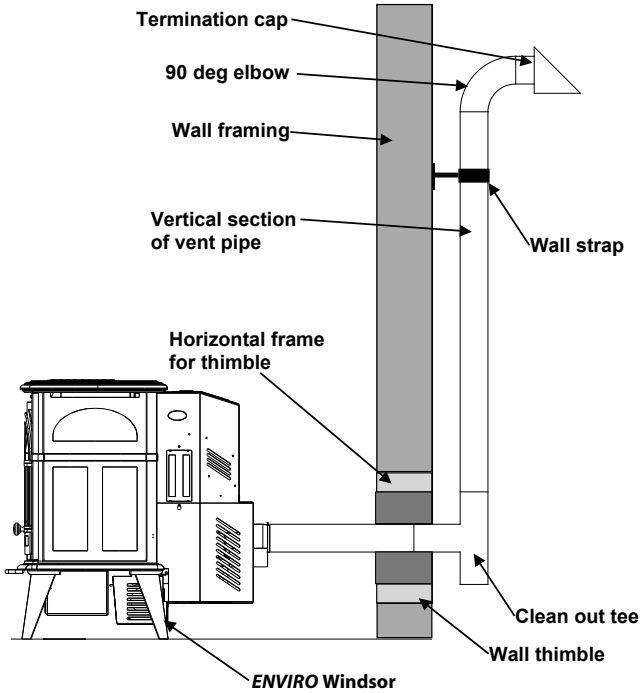

Installation to use if there is a concrete or retaining wall in line with exhaust vent on pellet stove.

The termination must be 12 inches (30 cm) from the outside wall and 12 inches (30 cm) above the ground.

This is the recommended installation set up.

Vertical Installation:

1. Choose a stove location that is ideal. See the section Deciding Where to Locate Your Pellet Appliance.

2. Place the unit on the hearth pad (if installed on a carpeted surface) and space the unit in a manner so that when the pellet vent is installed vertically, it will be 3" (76 mm) away from a combustible wall.

3. Locate the center of the fresh-air intake pipe on the unit. Match that center with the same point on the wall and cut a hole about 2 1/8 (53.9 mm) in diameter.

4. Install the fresh-air intake pipe.

5. Install the tee with clean out.

6. Install the pellet vent upward from there. When you reach the ceiling make sure that the vent goes through the ceiling fire stop. Maintain a 3" (76 mm) distance to combustibles and keep attic insulation away from the vent pipe.

7. Finally, extend the pellet vent to go through the roof flashing.

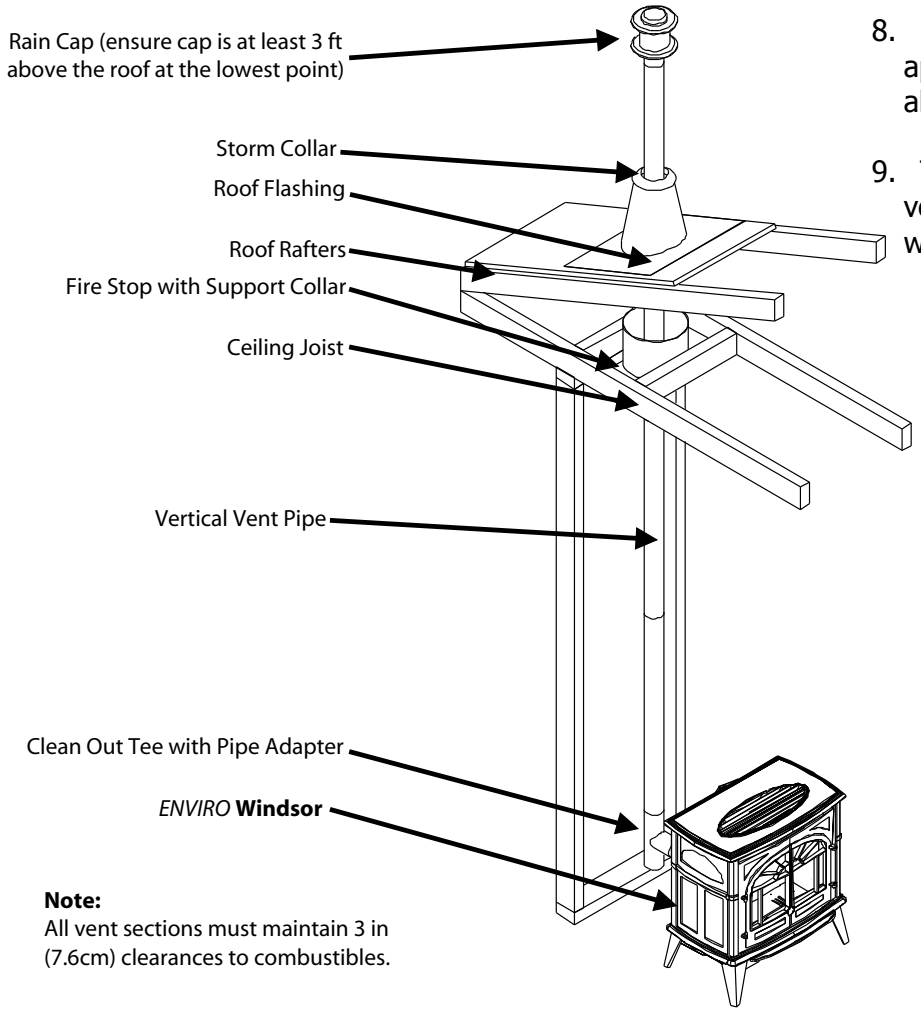

Note:
All vent sections must maintain 3 in (7.6cm) clearances to combustibles.

8. Ensure that the rain cap is approximately 36" (900 mm) above the roof.

9. The same methods apply for vertical installation outside. Install wall thimble and pipe supports.

Hearth Mount Installation:

1. Lock fireplace damper in the open position.

2. Install positive flue connector at the fireplace dampers.

3. Connect a Tee or a 90° degree elbow to the exhaust pipe.

4. Install flexible stainless steel liner or listed pellet vent to the top of the chimney.

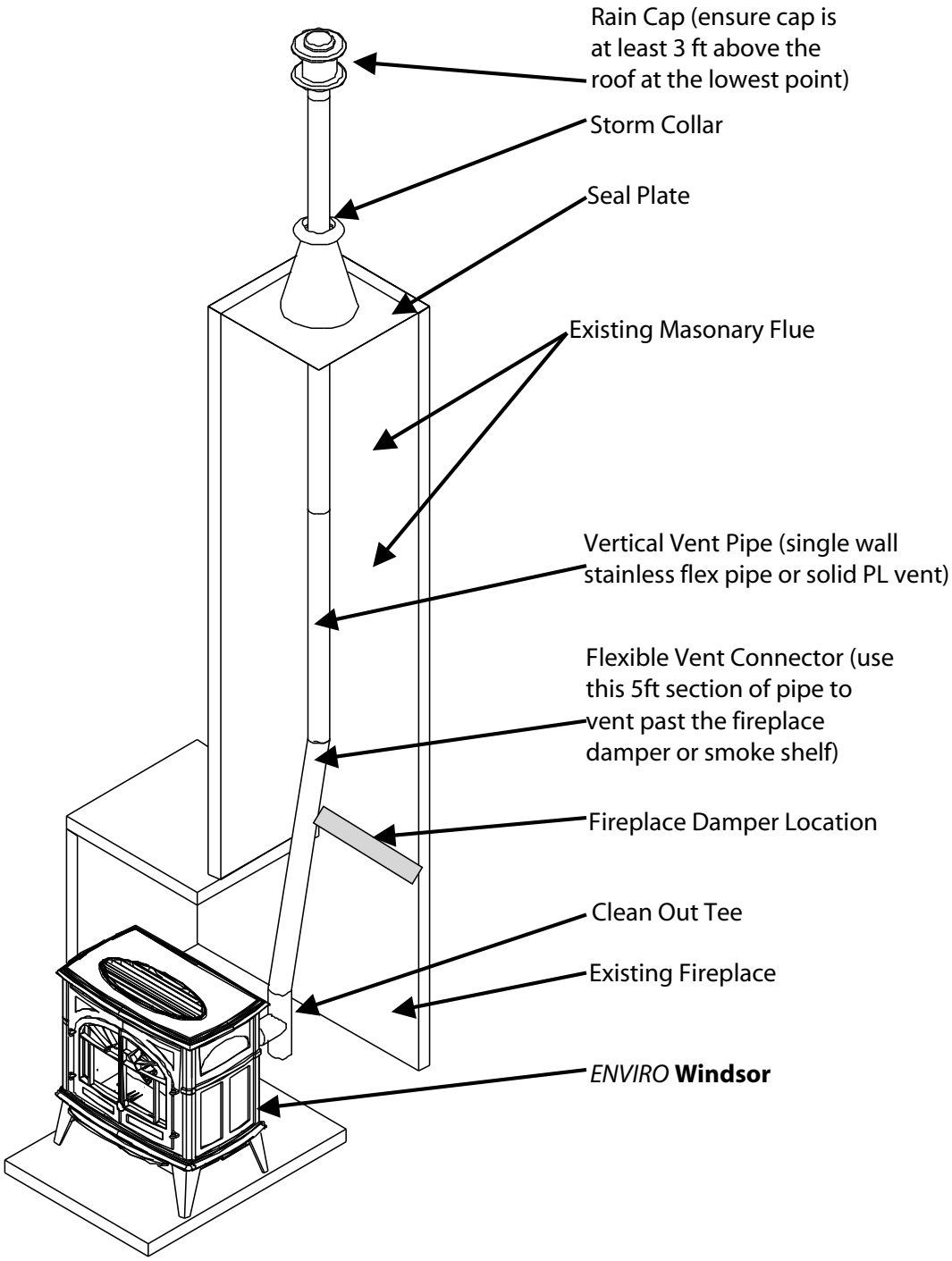

Exterior Mounted Exhaust Blower:

The **ENVIRO** WINDSOR can be equipped with an externally mounted exhaust blower. (PART # 50-492). This optional kit would include all components necessary to install the exhaust blower on any vertical wall surface.

Choose a location for your stove that meets the requirements stated in this manual and allows installation with the least amount of interference to house framing, plumbing, wiring, etc.

INCLUDED IN THE EXTERIOR MOUNTED EXHAUST BLOWER KIT ARE:

1 - Exterior vent housing.
1 - Exhaust blower housing.

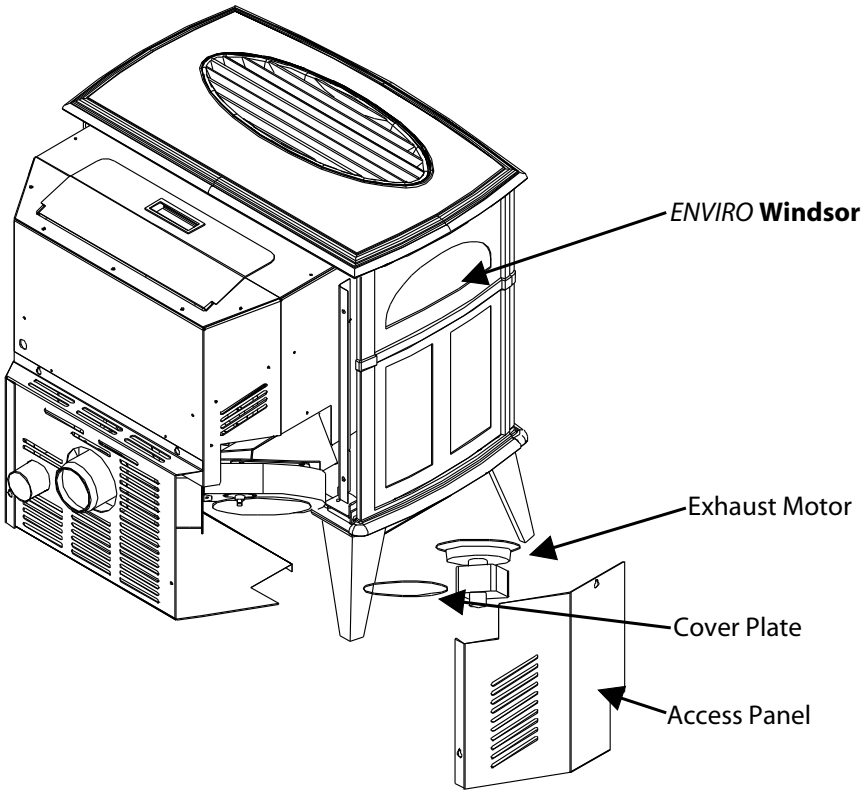

1. Remove the left side access panel from the unit and remove the exhaust blower by undoing the six 1/4 hex head sheet metal screws that fasten the blower to the housing.
2. Remove the back grill from the exterior exhaust vent housing and remove the round cover plate installed on the blower housing.
3. Reinstall the round cover plate on the unit where the exhaust motor was removed.
4. Install the exhaust blower into the exterior vent housing in the exhaust blower housing. Reinstall the back grill on the exterior vent housing.
5. Reinstall the access cover to the stove.

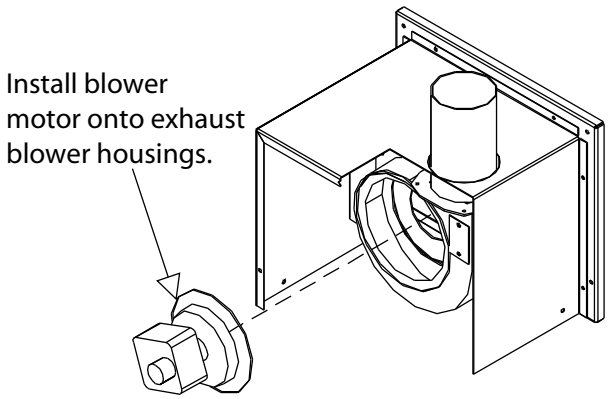

Apply normal venting practices when installing the vent pipe. Start by installing a pipe adapter, then a short section of pipe or an adjustable section through a wall thimble to maintain clearances to combustibles.

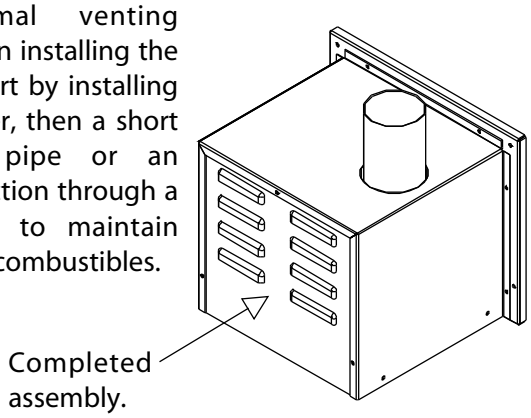

Typical Through Wall Outside Termination Intallation:

NOTE:

Ensure that all vent connections are installed by placing three screws evenly spaced around the perimeter and a small bead of high temperature silicone at each chimney connection.

Also ensure that all vertical vent sections are proper supported and all clearances to combustibles are maintained in accordance with the vent manufacturer's specifications.

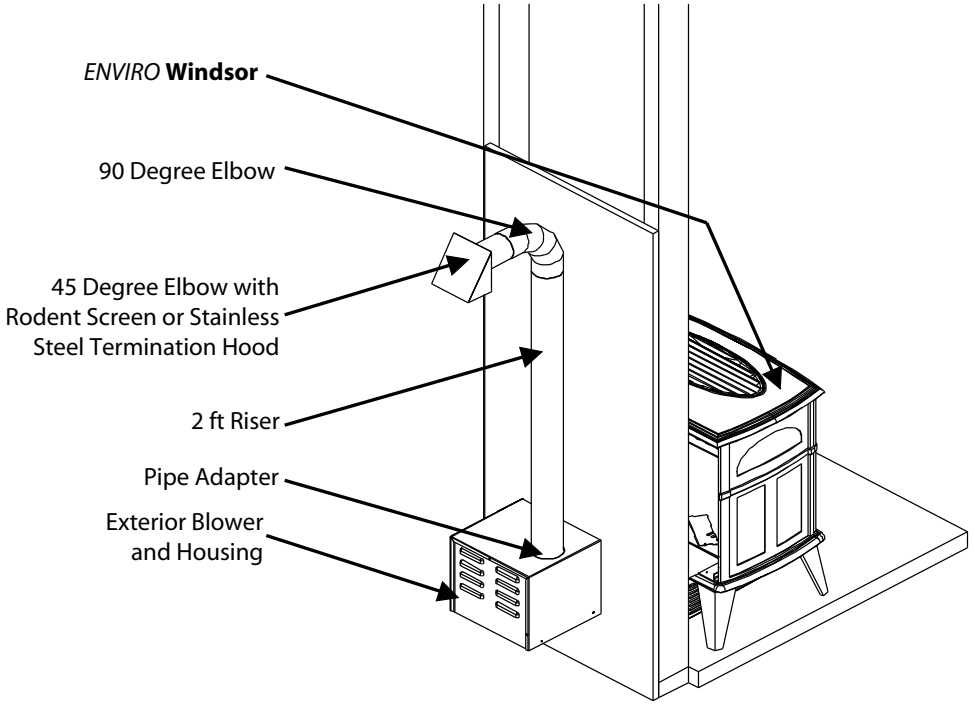

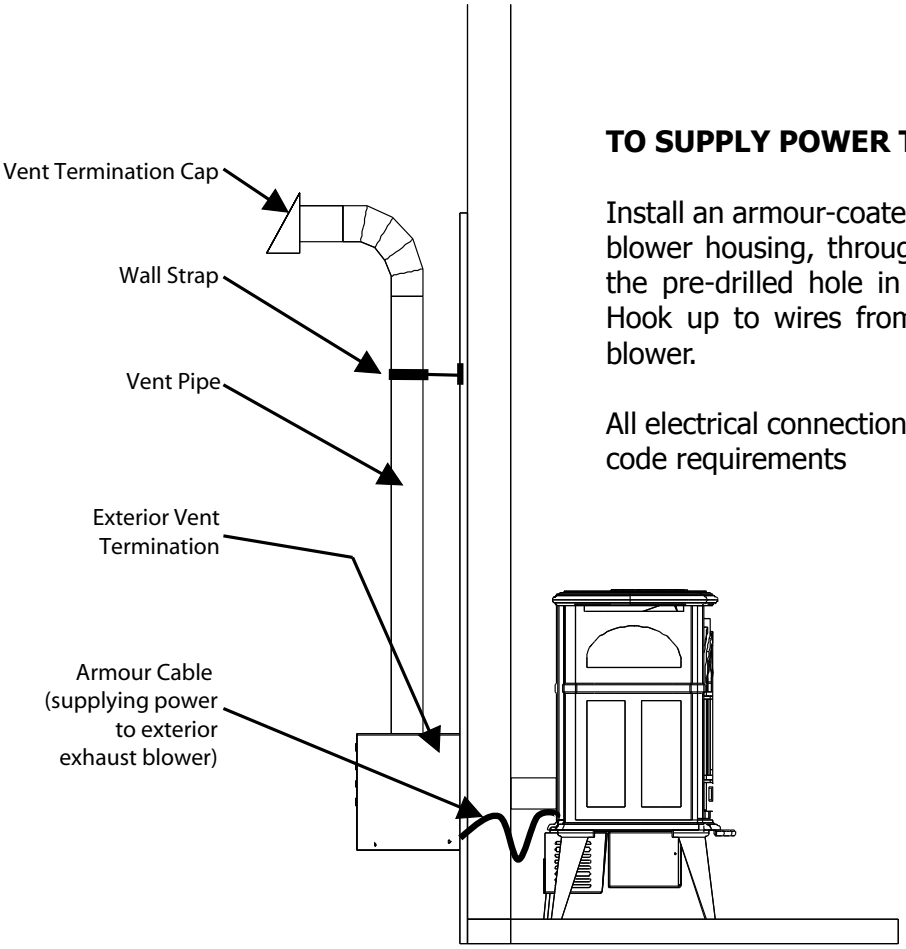

TO SUPPLY POWER TO THE EXHAUST BLOWER:

Install an armour-coated electrical cable from the exhaust blower housing, through the wall thimble and attach to the pre-drilled hole in the left hand rear hopper pillar. Hook up to wires from the wiring harness for exhaust blower.

All electrical connections must be in accordance with local code requirements

Through Wall Vertical Intallation:

Follow the previous pages for through wall installations. Ensure that vent pipe is properly secured to wall using wall straps. Maintain clearances to combustibles on vent pipe as well as unit.

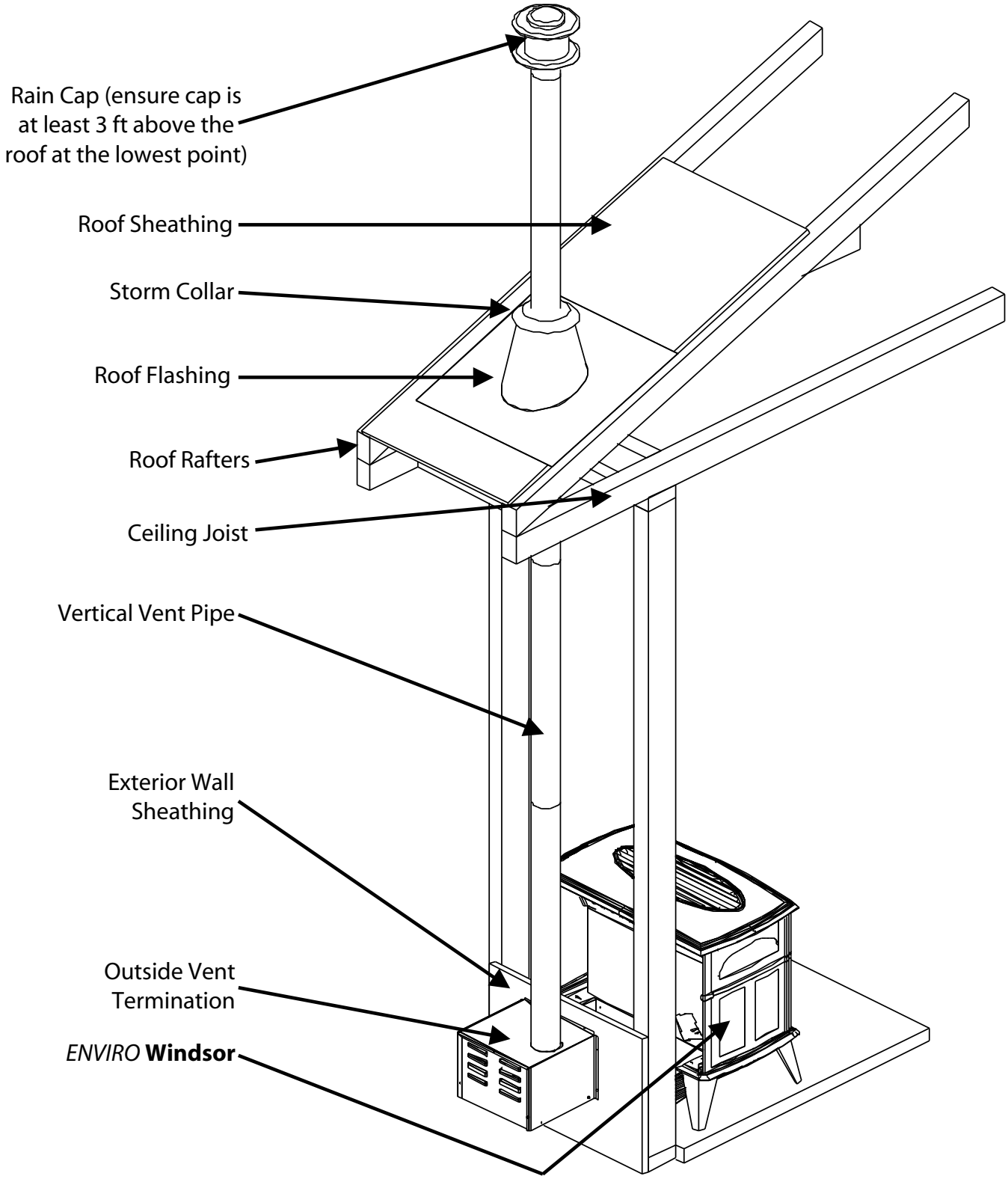

Troubleshooting

DO NOT:

-Hold the ON / OFF BUTTON down. This is a momentary contact switch and can be damaged if held down too long.
-Service the stove with wet hands. The stove is an electrical appliance, which may pose a shock hazard if handled improperly. Only qualified technicians should deal with possible internal electrical failures.
-Remove any screws in the firebox without first lubricating them with penetrating oil.

WHAT TO DO IF:

1. The stove will not start.
2. The stove will not operate when hot.
3. The exhaust blower will not function normally.
4. The convection blower will not function normally.
5. Ignitor : The pellets will not light.
6. The auger motor does not function normally.
7. Control settings (heat level) have no effect on fire
8. The stove keeps going out.

***NOTE: All troubleshooting procedures should be carried out by qualified technicians or installers.**

1. The stove will not start.

• Make sure the stove is plugged in and the wall outlet is supplying power.
• Push the ON /OFF button.
• If the Control Board has been placed in the ON /OFF thermostat mode, turn the thermostat up to call for heat.
• If the unit still does not light, contact your local service dealer for service.

2. The stove will not operate when hot.

• The third red LED light in the heat level indicator light will flash if a fire is not detected or if the fire has gone out.
• Check the hopper for fuel.
• The unit may require cleaning. Contact your local dealer for service.

3. The exhaust motor will not function normally.

• Open the left side access panel; check all connections against the wiring diagram.
• Contact your local dealer for service.

4. The convection blower will not function normally.

• Clean all grill openings at the back and below unit .
• Press the fan button. Does the fan come on? Press again to verify that the blower turns on; if not, contact your local dealer for service.

5. Ignitor- the pellets will not light.

Everything else in the stove operates but the ignitor will not light the pellets
• Make sure the burnpot liner is up tight and square to the ignitor tube by pushing the burn pot back against the ignitor tube.
• Check to see if the exhaust blower is operating; if not, contact your local dealer for service.

NOTE: The ignitor should be bright orange in color. If not, replace the igniter.

6. The auger motor will not function normally.

• Check for obstructions in the hopper system.
• Call your local dealer for service.

7. Control settings (Heat Level) have no effect on the fire.

• If the system light is flashing the Control Board has complete control of the unit. When the units system light becomes solid, control of the unit is given back to the operator.
• If there is no control of the Heat Level button, make sure the thermostat is calling for heat,
• Call your local dealer for service.

8. The stove keeps going out.

• If the stove goes out and leaves fresh unburned pellets or cigarette-like ashes in the burn pot liner, the fire is going out before the stove shuts off:
• Check to see that the slider is in the correct position.
• Turn the Heat Level up slightly (poor quality pellets will require slightly higher settings).
• Set the auger trim till the #1 and #5 lights are illuminated.

If the stove goes out and there are partially burned pellets left in the burn pot liner, the stove shuts down due to a lack of air, exhaust temperature or power failure:
• Adjust the slider damper.
• Check to see if the stove needs a more complete cleaning.
• Turn the Heat Level up slightly (poor quality pellets will require slightly higher settings).
• Did the power go out?
• Contact your local dealer for service.

Wiring Diagram

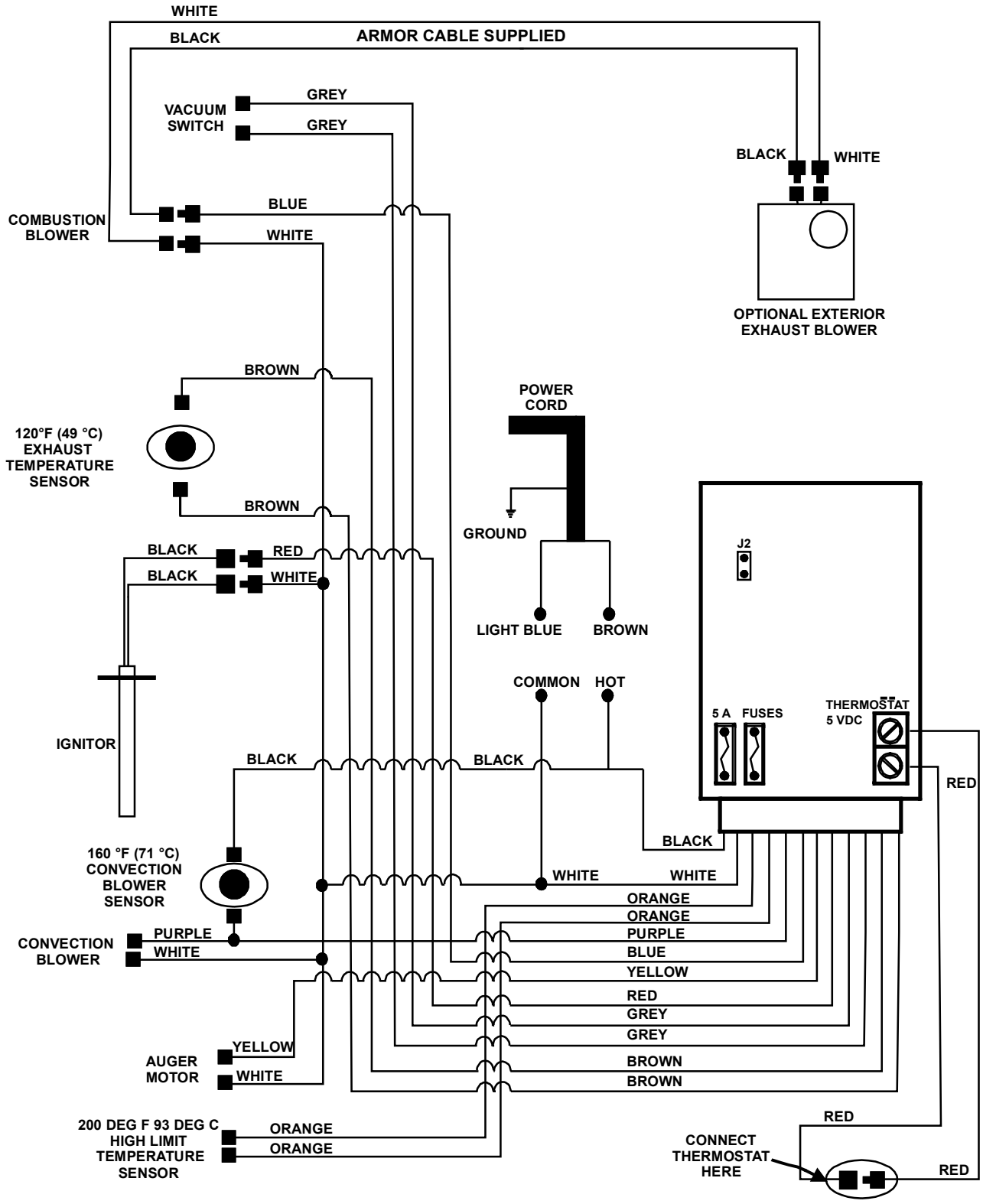

Parts List

Part #	Description
20-005-220V	Combustion Blower 220V
50-177	Door Screen
50-180	Slider Damper W/bolt
50-181	Heat Exchanger Rod
50-182	Cast Brick Panel (Center)
50-183	Cast Brick Panel (Left)
50-184	Cast Brick Panel (Right)
50-185	Brick Panel Retainers (Set Of 2)
50-186	Inner Door Complete With Glass & Tape
50-187	Glass With Tape
50-188	Inner Door Only - Painted
50-189	Inner Door Handle
50-190	Door Hinge Bracket
50-191	Ash Pan With Painted Knob
50-193	Hopper Lid
50-194	Back grill
50-195	Access Panel Left
50-196	Access Panel Right
50-197	Rear Casting Mounts (Right And Left)
50-198	Bottom Casting Mounts (Right And Left)
50-199	Front Casting Mounts (Right And Left)
50-262	Door Knob - Brushed Nickel
50-303	Circuit Board 220V
50-363	Air Deflector
50-472	Hose Barb Shield
50-474	Stainless Steel Burn Pot Liner
50-492	External Exhaust Kit (EURO)
50-511	Windsor Upgrade Kit
50-515	Convection Blower 220V
50-523	Flush Handle For Hopper Lid
50-592	AES - Windsor Upgrade Kit
50-607	Self Adhesive Vinyl Spacers (Set Of 4)
50-613	Control Panel & Decal 220V
50-634	Dual bulb door gasket (10ft)
50-646	400 Watt Ignitor 220V
50-687	Auger Motor Mount
50-688	Auger Plate W/bushing
50-689	Auger Mounting Hardware
50-692	Shafted Auger With Paddles 220V
50-714	Circuit Board Decal (Euro)
50-750	Hinge Pin - Silver
50-766	Oval Ceramic Gasket

Part #	Description
50-835	Windsor Owner's Manual - DIN
50-836	Windsor Technical Manual - DIN
EC-001	120°F Ceramic Fan Temperature Sensor
EF-001-220V	Auger Motor 220V
EF-013	Fan Temperature Sensor 160°F
EF-016	High Limit Temperature Sensor 200°F Manual Reset
EF-017-220V	Vacuum Switch 220V
EF-021	Ignition Burn Pot
EF-054-220V	Power Cord 220V
EF-124	Shoulder Bolt, Hrd Bushing & Nut (Set Of 2)
50-192	Cast Ash Shelf - Painted
50-209	Cast Ash Shelf - Antique White
50-210	Cast Ash Shelf - Diamond Black
50-211	Cast Ash Shelf - Inferno Red
50-212	Cast Ash Shelf - Pearl Grey
50-213	Cast Ash Shelf - Wedgewood Blue
50-214	Cast Ash Shelf - Westport Green
50-866	Cast Ash Shelf - Antique Chestnut
50-202	Cast Front Complete (Doors & Ash Shelf) - Painted
50-227	Cast Front Complete (Doors & Ash Shelf) - Antique White
50-228	Cast Front Complete (Doors & Ash Shelf) - Diamond Black
50-229	Cast Front Complete (Doors & Ash Shelf) - Inferno Red
50-230	Cast Front Complete (Doors & Ash Shelf) - Pearl Grey
50-231	Cast Front Complete (Doors & Ash Shelf) - Wedgewood Blue
50-232	Cast Front Complete (Doors & Ash Shelf) - Westport Green
50-861	Cast Front Complete (Doors & Ash Shelf) - Antique Chestnut
50-203	Cast Side Left - Painted
50-233	Cast Side Left - Antique White
50-234	Cast Side Left - Diamond Black
50-235	Cast Side Left - Inferno Red
50-236	Cast Side Left - Pearl Grey
50-237	Cast Side Left - Wedgewood Blue
50-238	Cast Side Left - Westport Green
50-862	Cast Side Left - Antique Chestnut
50-204	Cast Side Right - Painted
50-239	Cast Side Right - Antique White

Part #	Description
50-240	Cast Side Right - Diamond Black
50-241	Cast Side Right - Inferno Red
50-242	Cast Side Right - Pearl Grey
50-243	Cast Side Right - Wedgewood Blue
50-244	Cast Side Right - Westport Green
50-863	Cast Side Right - Antique Chestnut
50-205	Cast Grate - Painted
50-245	Cast Grate - Antique White
50-246	Cast Grate - Diamond Black
50-247	Cast Grate - Inferno Red
50-248	Cast Grate - Pearl Grey
50-249	Cast Grate - Wedgewood Blue
50-250	Cast Grate - Westport Green
50-864	Cast Grate - Antique Chestnut
50-206	Cast Top Only (No Grate) - Painted
50-251	Cast Top Only (No Grate) - Antique White
50-252	Cast Top Only (No Grate) - Diamond Black
50-253	Cast Top Only (No Grate) - Inferno Red
50-254	Cast Top Only (No Grate) - Pearl Grey
50-256	Cast Top Only (No Grate) - Wedgewood Blue
50-257	Cast Top Only (No Grate) - Westport Green
50-865	Cast Top Only (No Grate) - Antique Chestnut
50-576	Complete Cast Body - Painted
50-577	Complete Cast Body - Antique White
50-578	Complete Cast Body - Diamond Black
50-579	Complete Cast Body - Inferno Red
50-580	Complete Cast Body - Pearl Grey
50-581	Complete Cast Body - Wedgewood Blue
50-582	Complete Cast Body - Westport Green
50-867	Complete Cast Body - Antique Chestnut

Parts Diagram - Components

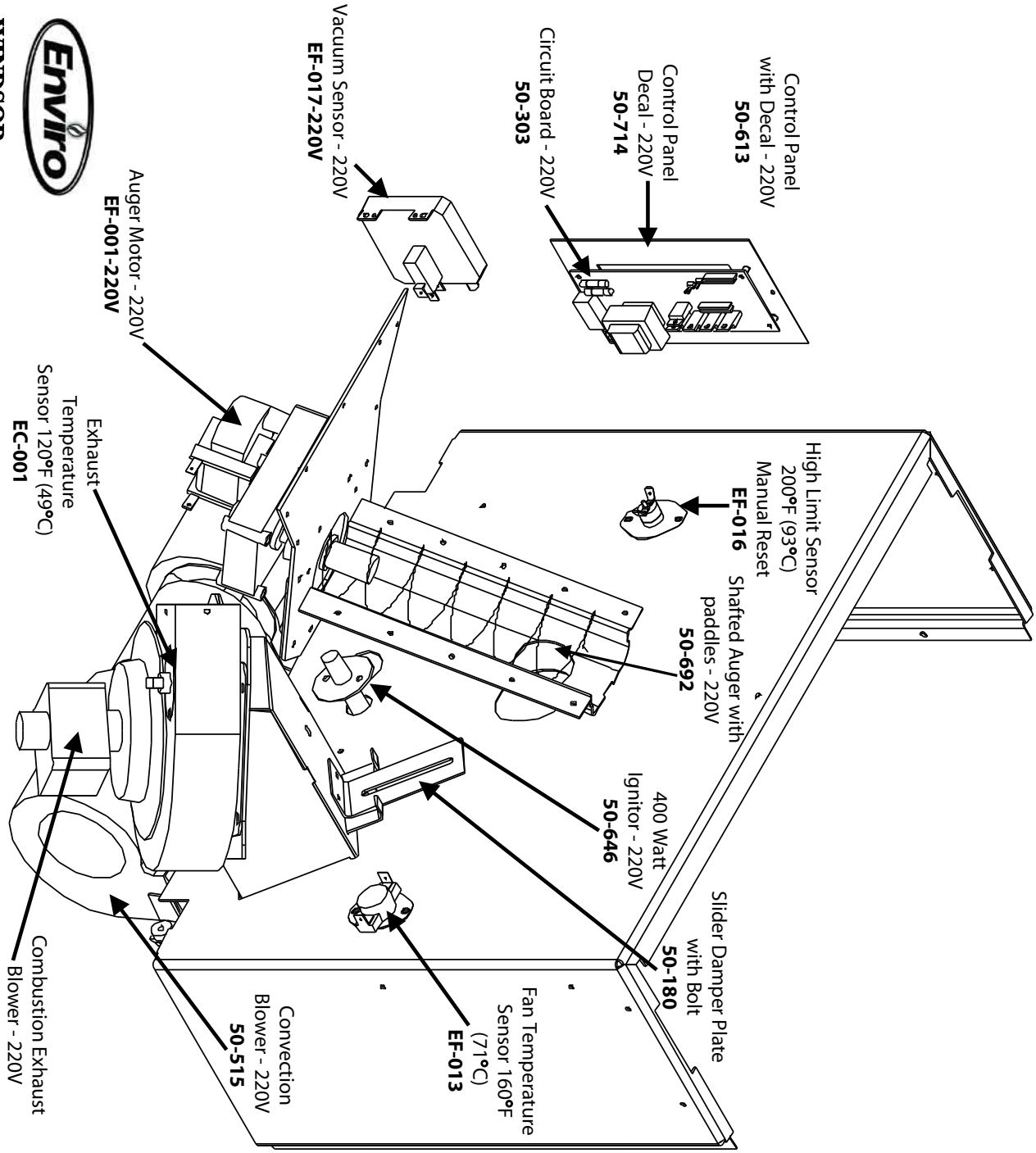

Parts Diagram - Steel

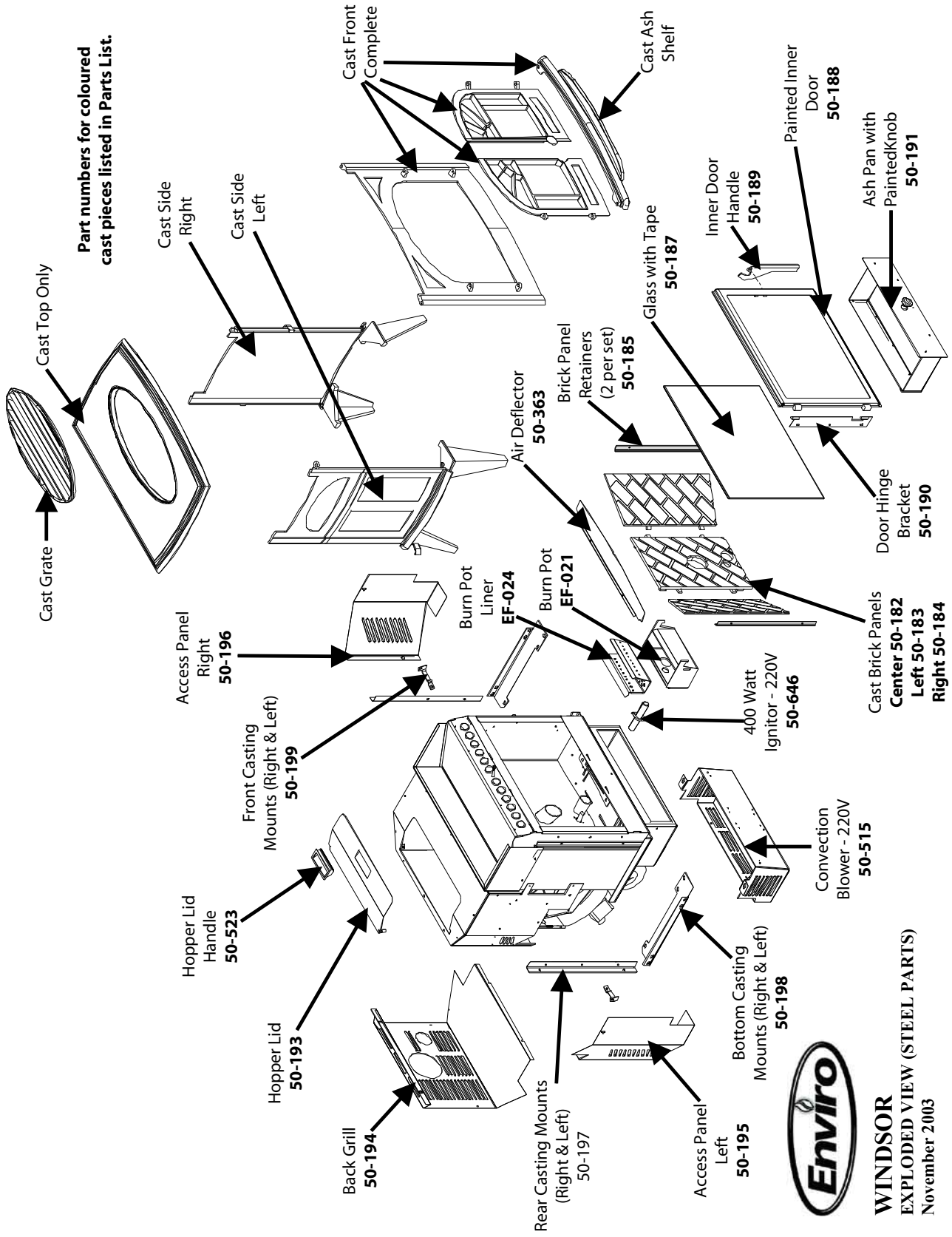

Warranty

Sherwood Industries Ltd. gives a five-year limited warranty on all steel manufactured parts. A one-year warranty is provided on all electrical components. The above limited warranties are extended only to the original purchaser.

There is no warranty on the following parts:

- Fiberglass rope baskets
- refractory material
- burn pot liner
- paint
- enamel finish or gold plating where it applies
- vacuum hose.

****NOTE:** The paint on the brick firebox lining may peel. This is due to the extreme conditions applied to the paint and is in no way covered under warranty.

WHEN FILING A WARRANTY CLAIM PLEASE COMPLETE THE FOLLOWING INFORMATION ON AN OFFICIAL WARRANTY CLAIM FORM:

TO THE DEALER:

- Name, Address and Telephone Number of purchaser and date of purchase.
- Date of Installation. Name of the installer and dealer. Serial Number of the appliance. Nature of the compliant, defects or malfunction, description and part # of any parts replaced.

TO THE DISTRIBUTOR:

- Sign and verify that work and information are correct.

ENSURE THAT YOU SPECIFY THE NATURE OF THE COMPLAINT, DEFECT, PERIODICAL MALFUNCTION, ETC.

The limited warranty covers defects in materials and workmanship as long as the products has been installed according to the manual's instruction. If the product is damaged or broken as a result of mishandling or misuse, the warranty does not apply. Removal and re-installation costs are not covered under this warranty.

It is the manufacturer's option whether to repair or replace the appliance. The shipping cost to and from the factory is paid by the consumer. All warranties by the manufacturer are set forth herein and no claim shall be made against the manufacturer on any oral warranty or representation.

Sherwood Industries Ltd. assumes no responsibility for damage caused by household power fluctuations or power surges.

For the do-it-yourself Individual

The consumer should be aware that the pellet appliance needs setting using tools that he/she might not have. Consult an ENVIRO dealer. It is recommended than only an authorized ENVIROFIRE dealer installs an ENVIRO unit. There will be no warranty coverage on parts destroyed or burnt out as a result of a consumer installation error or defect.

Sherwood Industries Ltd. reserves the right to make changes without any notice.

Installation Data Sheet

The following information must be recorded by the installer for warranty purposes and future reference.

NAME OF OWNER:

_____

ADDRESS:

_____

_____

_____

PHONE:_____

NAME OF DEALER:

_____

ADDRESS:

_____

_____

_____

PHONE:_____

MODEL:_____

SERIAL NUMBER:_____

DATE OF PURCHASE: _____ (dd/mm/yyyy)

DATE OF INSTALLATION:_____(dd/mm/yyyy)

MAGNEHELIC AT INSTALL:_____

INSTALLER'S SIGNATURE:

_____

NAME OF INSTALLER:

_____

ADDRESS:

_____

_____

_____

PHONE:_____

MANUFACTURED BY:
SHERWOOD INDUSTRIES LTD.
6782 OLDFIELD RD. SAANICHTON, BC, CANADA V8M 2A3
www.envirofire.biz
December 3, 2003
C-10166