SHERWOOD INDUSTRIES IS AN ENVIRONMENTALLY RESPONSIBLE COMPANY. THIS MANUAL IS PRINTED ON RECYCLED PAPER.

PLEASE KEEP THESE INSTRUCTIONS FOR FUTURE REFERENCE

Enviro

Westport & Bedford

BY: SHERWOOD INDUSTRIES LTD

OWNER'S MANUAL





WHAT TO DO IF YOU SMELL GAS

- **Open windows/Extinguish any open flame.**
- **Do not try to light any appliance.**
- **Do not touch any electrical switch or use any phone in your building.**
- **Immediately call your gas supplier from a neighbour's phone. Follow the gas supplier's instructions.**
- **If you cannot reach your gas supplier, call the fire department.**

This appliance may be installed in an after market permanently located, manufactured (mobile) home, where not prohibited by local codes.

This appliance is only for use with the type of gas indicated on the rating plate. This appliance is not convertible for use with other gases, unless a certified kit is used.

WARNING

If the information in this manual is not followed exactly, a fire or explosion may result causing property damage, personal injury or loss of life. Installation and service must be performed by a qualified installer, service agency or the gas supplier.

INTERTEK C Warnock Hersey US

FOR YOUR SAFETY

Do not store or use gasoline or other Flammable vapours and liquids in the vicinity of this or any other appliance.

Massachusetts installations (Warning): This product must be installed by a licensed plumber or gas fitter when installed within the Commonwealth of Massachusetts. Other Massachusetts code requirements: -Flexible connector must not be longer than 36 inches, shut off valve must be a "T" handle gas cock, only direct vent sealed combustion products are approved for bedroom/bathrooms, fireplace dampers must be removed or welded in the open position prior to the installation of a fireplace insert or gas log.

Safety Precautions

FOR SAFE INSTALLATION AND OPERATION OF YOUR "ENVIRO" HEATER, PLEASE CAREFULLY READ THE FOLLOWING INFORMATION:

- All ENVIRO gas-fired appliances must be installed in accordance with their instructions. Carefully read all the instructions in this manual first. Consult the building authority having jurisdiction to determine the need for a permit prior to commencing the installation.
- **NOTE:** Failure to follow these instructions could cause a malfunction of the fireplace, which could result in death, serious bodily injury, and/or property damage.
- Failure to follow these instructions may also void your fire insurance and/or warranty.

GENERAL

- Installation and repair should be done by a qualified service person. The appliance should be inspected before the first use and, annually thereafter by a qualified service person. More frequent cleaning may be required due to excessive lint from carpeting, bedding material, etc. It is imperative the control compartments, burners and circulating air passageways of the appliance be kept clean.
- Due to high temperatures, the appliance should be located out of high traffic areas and away from furniture and draperies.

Children and adults should be alerted to the hazards of high surface temperatures and should stay away to avoid burns or clothing ignition.

Young children should be carefully supervised when they are in the same room as the appliance.

FOR YOUR SAFETY

- Installation and service must be performed by a qualified installer, service agency or gas supplier.
- This installation must conform to local codes or, in the absence of local codes, to the current CAN/CGA-B149 installation code (Canada) or National Fuel Gas Code ANSI Z223.1.2 (USA)
- To prevent injury, do not allow anyone who is unfamiliar with the stove to operate it.

- **To prevent injury, if the pilot or pilot and burners have gone out on their own, open the glass door and wait 5 minutes to air out before attempting to re-light the stove.**

- Always keep the area around this appliance clear of combustible material, gasoline and other flammable liquids and vapours.
- This appliance should not be used as a drying rack for clothing or for hanging Christmas stockings/ decorations.
- Due to the paint curing on the stove, a faint odor and slight smoking will likely be noticed when the stove is first used. Open a window until the smoking stops.

Always connect this gas stove to a vent system and vent to the outside of the building envelope. Never vent to another room or inside the building. Make sure the specified vent pipe is used; properly sized and of adequate height to provide sufficient draft. Inspect the venting system annually for blockage and signs of deterioration.

WARNING: Failure to position the parts in accordance with the diagrams in this booklet, or failure to use only parts specifically approved with this appliance may result in property damage or personal injury.

WARNING: Do not operate with the glass front removed, cracked or broken. Replacement of the glass must be done by a licensed or qualified service person.

- Never use solid fuels such as wood, paper, cardboard, coal, or any flammable liquids, etc., in this appliance.
- Do not use this heater if any part has been under water. Immediately call a qualified service technician to inspect the heater and to replace any part of the control or gas control systems that have been under water.
- Do not abuse the glass by striking it or slamming the door shut.

Table of Contents

Safety Precautions....2
Table of Contents....3
Codes And Approvals....4
Specifications....5
- Westport Dimensions....5
- Westport Clearances to Combustibles....5
- Bedford Dimensions....6
- Bedford Clearances to Combustibles....6

Initial Installation....7
- Vent Termination Restrictions....7
- Vent Parts....8
- Planning Your Installation....8
- Horizontal Installation....9
- Vertical Installation....11
- Cathedral Ceiling Installation....14
- Sherwood Industries Ltd. Venting Kit....14
- Venting into a Class 'A' Chimney....16
- Converting Top Vented into Rear Vented....16
- Converting Main Burner Orifice For Rear Vent Installation....17
- Installation of Rear Vented; 20,000 BTU....18
- Installation of Rear Vented; 30,000 BTU....18
- Installation of Top Vented; Vertical Termination....19
- Installation of Top Vented; Horizontal Termination....19
- Vent Restrictor and Settings....20
- Restrictor Setting vs Vent Pipe Length....20
- Electrical Requirements For Gas Valve and Optional Blower....21
- Installing Optional Blower....21
- Fuel Conversion....22
- Gas Line Connection and Testing....23

Secondary Installation....24
- Installation of Log Set and Embers....24

Operating Instructions....26
- Lighting Instructions....26
- Turning Gas Off To Appliance:....26

Routine Maintenance and Service....27
Trouble Shooting....29
Parts List....30
Westport Cast Parts List....31
Parts Diagram - Body....32
Parts Diagram - Bedford....33
Warranty....34
Installation Data Sheet....35

Codes And Approvals

DIRECT VENT: This type is identified by the suffix DV. This appliance draws all of its' air for combustion from outside the dwelling, through a specially designed vent pipe system.

**** TOP VENT DV**** **Certified for installation from 0-4500 ft (0-1372 m)**
**** REAR VENT DV (refer to venting section)**** **Certified for installation from 0-2000 ft (0-610 m)**

This appliance has been tested and approved for installations from 0 ft. to 4500 ft. above sea level.
In the USA:
The appliance may be installed at higher altitudes. Please refer to your American Gas Association guidelines which state: the sea level rated input of Gas Designed Appliances installed at elevations above 2000 ft. is to be reduced 4% for each 1000 ft. above sea level. Refer also to local authorities or codes which have jurisdiction in your area regarding the de-rate guidelines.
In Canada:
When the appliance is installed at elevations above 4500 ft. (1350 m), the certified high altitude rating shall be reduced at the rate of 4% for each additional 1000 ft. (300 m).

- This appliance has been tested by INTERTEK (**Warnock Hersey**) and found to comply with the established VENTED GAS FIREPLACE HEATER standards in CANADA and the USA as follows:

VENTED GAS FIREPLACE HEATER (WESTPORT/BEDFORD DV) (NG/LPG)
TESTED TO: ANSI Z21.88a.2002 CSA 2.33a.2002 VENTED GAS FIREPLACE HEATER
CAN/CGA 2.17-M91 GAS FIRED APPLIANCES FOR HIGH ALTITUDES

This ENVIRO WESTPORT/BEDFORD Fireplace:

- Has been certified for use with either natural or propane gases. (See rating label.)
- Is not for use with solid fuels.
- Is approved for bedroom or bed sitting room. (Canada: must install an approved wall thermostat)
- Must be installed in accordance with local codes. If none exist, use current installation code CAN/CGA B149 in Canada or ANSI Z223.1/NFPA 54 in the USA.
- Must be properly connected to a venting system and not connected to a chimney flue serving a separate solid-fuel burning appliance.

IMPORTANT NOTICE: (RE: FIRST FIRE UP): When the unit is turned on for the first time, it should be turned onto high without the fan on for the first 4 hours. This will cure the paint, logs, gasket material and other products used in the manufacturing process. It is advisable to open a window or door, as the unit will start to smoke and can irritate some people. After the unit has gone through the first burn turn the unit off including the pilot, let the unit get cold then remove the glass door and clean it with a good gas fireplace glass cleaner, available at your local ENVIRO dealer.

Specifications

WARNING:

Operation of this heater when not connected to a properly installed and maintained venting system can result in carbon monoxide (CO) poisoning and possible death.

Westport Dimensions:

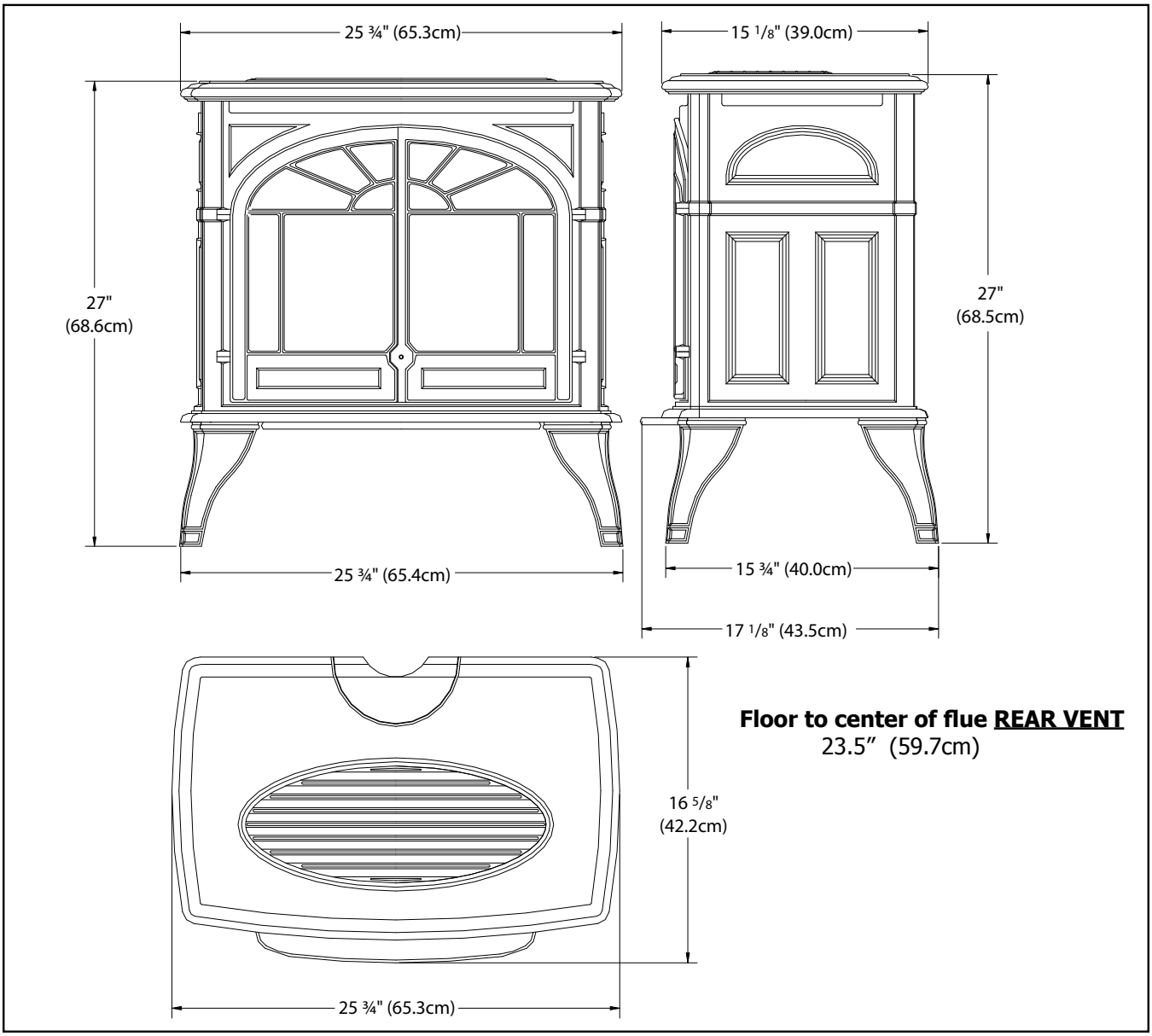

Figure 1: Westport Exterior Dimensions

Westport Clearances to Combustibles:

Sidewall to unit	11 inches (27.9 cm)	Minimum Alcove Dimensions:
Backwall to unit	2.5 inches (6.35 cm)	Width 48 inches (121.9 cm)
Corner to unit	2.5 inches (6.35 cm)	Depth 24 inches (60.96 cm)
Cieling	60 inches above floor (152.4 cm)	Height 60 inches (152.4 cm)
Floor	(hard wood and linoleum) 0 inches	

Carpeted surfaces must use a non combustible hearth pad.

Specifications

Bedford Dimensions:

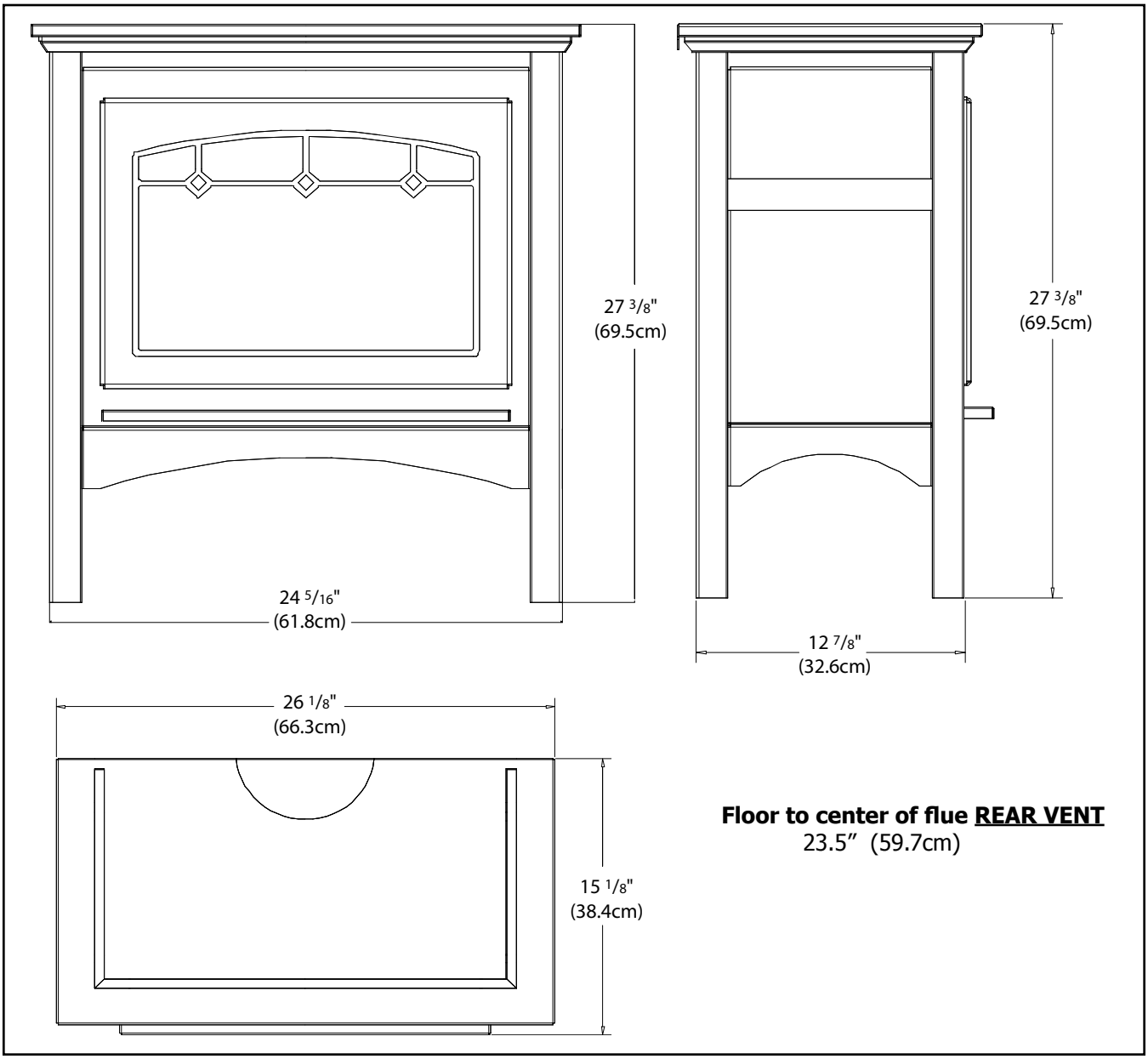

Figure 2: Bedford Exterior Dimensions

Bedford Clearances to Combustibles:

Sidewall to unit	11 inches (27.9 cm)	Minimum Alcove Dimensions:
Backwall to unit	2.5 inches (6.35 cm)	Width 48 inches (121.9 cm)
Corner to unit	2.5 inches (6.35 cm)	Depth 24 inches (60.96 cm)
Cieling	60 inches above floor (152.4 cm)	Height 60 inches (152.4 cm)
Floor	(hard wood and linoleum) 0 inches	

Carpeted surfaces must use a non combustible hearth pad.

Initial Installation

QUALIFIED INSTALLERS ONLY

Vent Termination Restrictions:

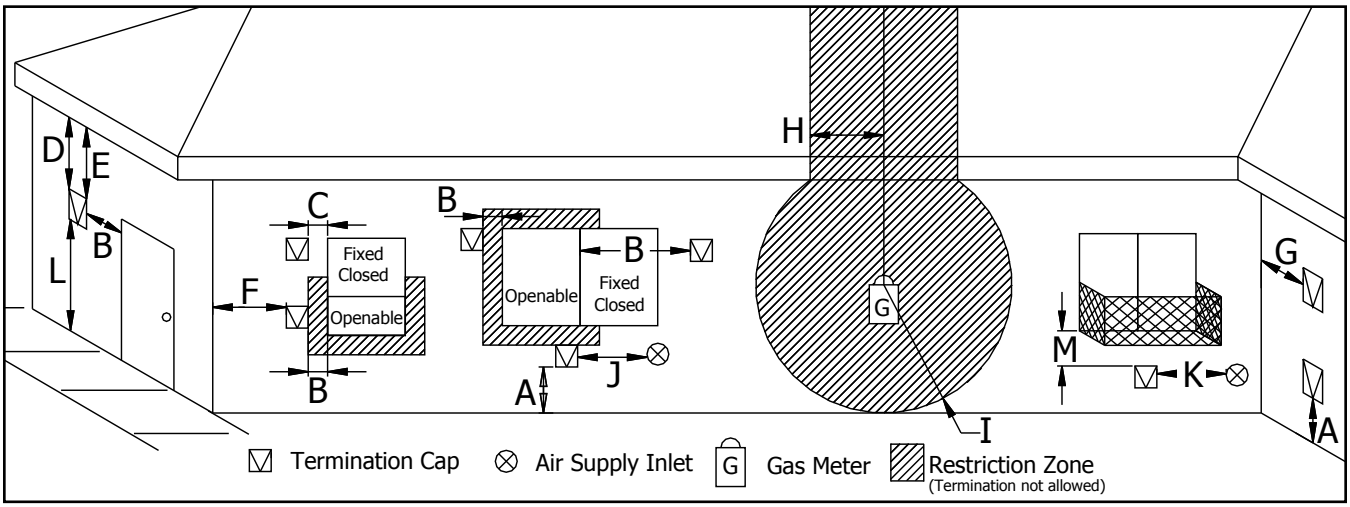

Figure 3: Exterior Vent Termination Locations, use in conjunction with Table 1.

Letter	Canadian Installation [1]	US Installation[2]	Description
A	12in (30cm)		Clearance above grade, verandah, porch, deck, or balcony.
B	12in (30cm)	9in (23cm)	Clearance from window or door that may be opened.
C	12in (30cm)*		Clearance from permanently closed window (to prevent condensation).
D	24in (60cm)*		Vertical clearance to ventilated soffit located above the terminal, within a horizontal distance of 2 ft (60cm) from center line of terminal.
E	18in (45cm)*		Clearance to unventilated soffit.
F	12in (30cm)*		Clearance to outside corner.
G	12in (30cm)*		Clearance to inside corner.
H	3ft (91cm) within a height of 15ft (4.5m) above the meter/ regulator assembly	3ft (91cm) within a height of 15ft (4.5m) above the meter/ regulator assembly*	Clearance to each side of center line extended above meter/regulator assembly.
I	3ft (91cm)	3ft (91cm)*	Radial clearance around service regulator vent outlet.
J	12in (30cm)	9in (23cm)	Clearance to non-mechanical air supply inlet to building, or the combustion air inlet to any other appliance.
K	6ft (1.83m)	3ft (91cm) above if within 10ft (3m) horizontally	Clearance to mechanical air supply inlet.
L	7ft (2.13m)[t]	7ft (2.13m)*[t]	Clearance above paved sidewalk or paved driveway located on public property.
M	12in / 30cm[+]	12in / 30cm*[+]	Clearance under verandah, porch, deck, or balcony.

Table 1: Exterior Vent Termination Locations, use in conjunction with Figure 3.

[1] In accordance with the current CSA B149, Natural Gas and Propane Installation Code.
[2] In accordance with the current ANSI Z223.1 NFPA 54, National Fuel Gas Code.
* These numbers are only estimates. Clearance in accordance with installation codes and the requirements of the gas supplier.
[t] A vent shall not terminate directly above a side walk or paved driveway that is located between two single family dwellings and it serves both dwellings.
[+] Permitted only if verandah, porch, deck, or balcony is fully open on a minimum of two sides beneath the floor.

NOTE: Venting terminals shall not be recessed into walls or siding.

Initial Installation

QUALIFIED INSTALLERS ONLY

Vent Parts:

SIMPSON DURAVENT (SD) and METALBESTOS (M), must state if galvanized or black wanted, PART NUMBERS:

SD	M	Description	SD	M	Description
908	1604006	6" pipe length	943S		Flashing, 7/12 to 12/12 roof pitch
907	1604009	9" pipe length	953	1604810	Storm collar
906	1604012	12" pipe length	963	1604500	Fire stop
904	1604024	24" pipe length	988	1604430	Wall support
903	1604036	36" pipe length	984		Horizontal square termination
902	1604048	48" pipe length	971	1604621	Horizontal termination kit A
911		11" to 14 5/8" pipe, adjustable, black	980		Vertical termination
	1604082	4"-10" pipe , adjustable	991	1604802	High wind vertical termination
945	1604215	45° elbow, black	985	1604804	High wind horizontal termination
990	1604230	90° elbow, black		1604808	Vinyl siding shield plate
	1604825	Flashing, 0/12 to 6/12 roof pitch	950	1604806	Vinyl siding standoff
	1604830	Flashing, 6/12 to 12/12 roof pitch	942	1604460	Wall thimble
943		Flashing, 0/12 to 7/12 roof pitch			

Table 2: Vent Pipe Types with Part Numbers.

This fireplace have been tested and certified for use with SIMPSON DURAVENT TYPE GS PIPE FOR GAS STOVES. SECURITY CHIMNEY'S "SECURE VENT DIRECT VENT SYSTEM" and SELKIRK "METALBESTOS MDV VENT SYSTEM" kits are available for horizontal venting. When using Simpson Duravent, it is recommended that, before installation, a bead of RTV High Temperature Silicone should be applied to each outer vent joint, and Mil-Pac to each inner joint. When planning an installation, it will be necessary to select the proper length of vent pipe for the particular requirements.

A MINIMUM VERTICAL LENGTH OF 24" (61cm) TO THE FIRST 90° ELBOW IS REQUIRED. WITH THIS MINIMUM VERTICAL RISE, HORIZONTAL RUNS OF FROM 1FT (30.5cm) to 3FT (91.5cm) ARE PERMITTED TO REACH THE OUTSIDE VENT TERMINATION.

BEFORE BEGINNING THE INSTALLATION TAKE CARE TO ENSURE AN APPROPRIATE OUTSIDE LOCATION FOR THE VENT TERMINATION CAN BE ACCOMMODATED. **FOLLOW THE VENT LENGTH DIAGRAM PRECISELY.**

VENTING TERMINALS CANNOT BE RECESSED INTO A WALL OR SIDING.

If extra elbows are being used, overall allowable length will be reduced by 3ft (91.5cm) per additional elbow.

Planning Your Installation:

When planning your installation, it will be necessary to select the proper length of vent pipe for your particular requirements. It is important to note when passing through a wall, the maximum allowable wall thickness is 10 inches (25.4cm), 1½ inches (3.8cm) clearance to combustibles must be maintained. Select the amount of vertical rise desired for "vertical-to-horizontal" type installations. To determine the length of vent pipe required for vertical installations, measure the distance from the appliance flue outlet to the ceiling, the ceiling thickness, the vertical rise through the attic or second story, and allow for sufficient vent height above the roofline. For two story applications, A fire stop is required at each floor level. If an offset is needed in the attic, additional pipe and elbows will be required. To connect the venting system to the appliance flue outlet, a twist-lock adapter is built into the appliance at the factory.

Your total vent pipe length must be within the shaded area of Figure 29. If a 90° elbow is used in the horizontal plane, 36" (91.4cm) must be subtracted from the allowable horizontal run.

Initial Installation

QUALIFIED INSTALLERS ONLY

There are two basic types of Direct Vent System installations. The two types of installations are:

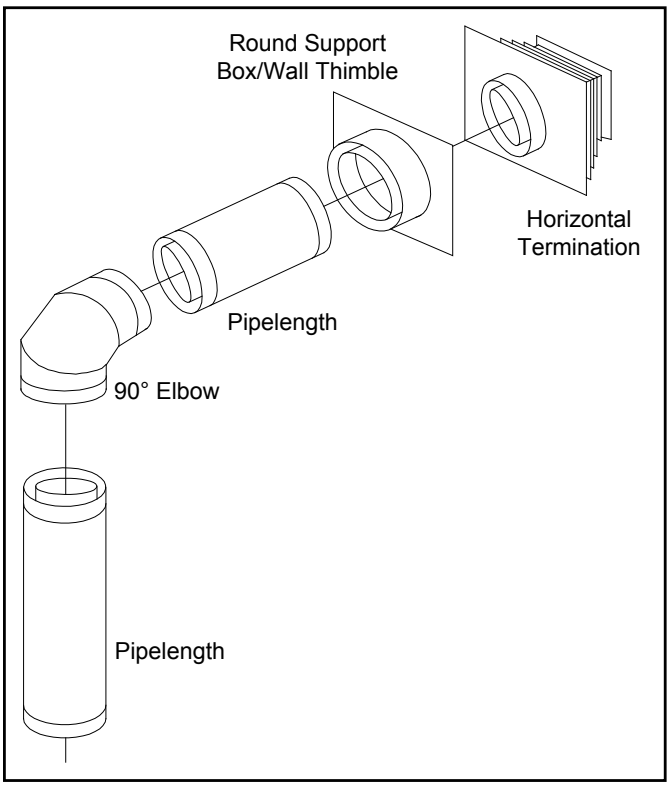

Figure 4: Common Horizontal Installation

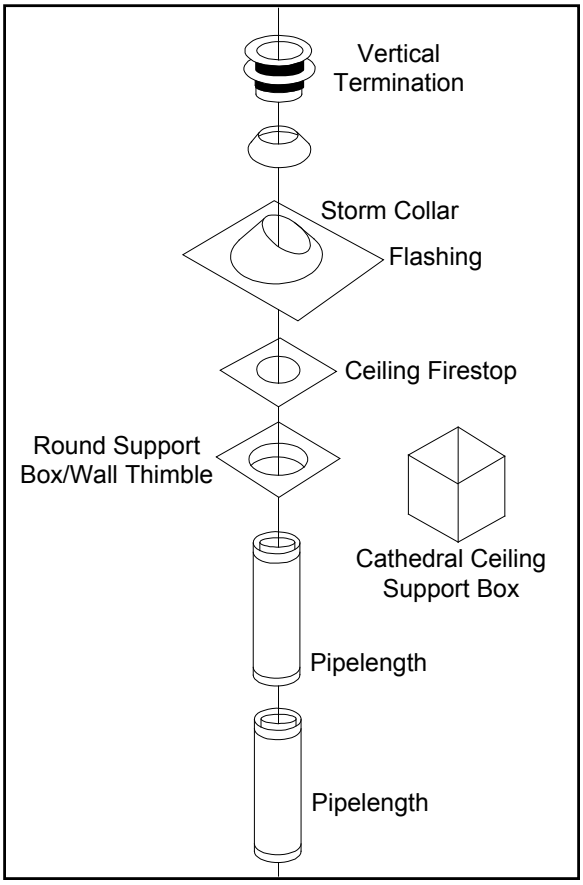

Figure 5: Common Vertical Installation

Horizontal Installation:

STEP 1. Set the appliance in the desired location. Check to determine if wall studs or roof rafters are in the way when the venting system is attached. If this is the case, you may want to adjust the location of the appliance.

STEP 2. Direct vent pipe and fittings are designed with special twist-lock connections. Assemble the desired combination of black pipe and elbows to the appliance adapter with pipe seams oriented towards the wall or floor, as much out of view as possible.

Place a bead of Mil-Pac on the outer edge of the inner exhaust pipe (non-flared end). Place a bead of high temperature silicone on the male edge of the outer pipe. Push the pipe sections completely together, then twist-lock one section clockwise approximately ¼ turn, until the two sections are fully locked. The female locking lugs will not be visible from the outside, on black pipe. They may be located by examining the inside of the female ends as shown in Figure 6.

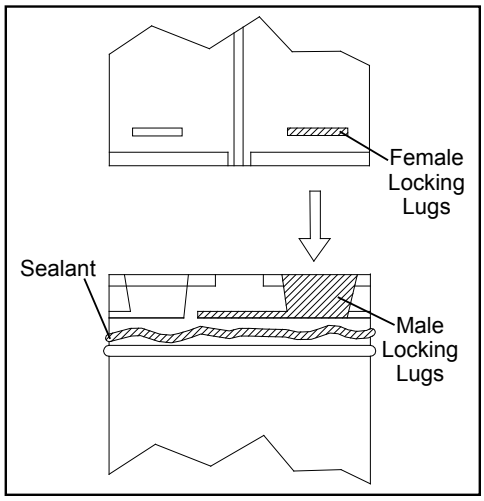

Figure 6: Twist-Lock Connection

Notes:

(1) Twist-lock procedure: four indentations, located on the female end of the pipes and fittings, are designed to slide straight onto the male ends of adjacent pipes and fittings, by orienting the four pipe indentations so they match and slide into the four entry slots on the male end.

QUALIFIED INSTALLERS ONLY

(2) Horizontal runs of vent pipe must be supported every three feet. Wall straps are available for this purpose, also when running horizontal pipe minimum clearances to combustibles must be maintained; **2" (5.1cm) at top, 1½" (3.8cm) at sides, 1½" (3.8cm) at bottom.**

STEP 3. With the pipe attached to the stove into the correct location, mark the wall for a 10" (25.4cm) x 10 (25.4cm) square hole. The center of the square hole should match the centerline of the horizontal pipe. Cut and frame the 10" (25.4cm) x 10 (25.4cm) hole in the exterior wall where the vent will be terminated. Refer to Figure 7. If the wall being penetrated is constructed of non-combustible material i.e. masonry or concrete, a 7" (17.8cm) hole is acceptable.

STEP 4. Position the horizontal vent termination in the center of the 10" (25.4cm) x 10" (25.4cm) hole, and attach to the exterior wall with the four screws provided. Before attaching the vent termination to the exterior wall, run a bead of non-hardening mastic around the edges, so as to make a seal between the termination and the wall. The arrow on the vent termination should be pointing up, insure that the proper clearances to combustible materials are maintained.

STEP 5. Before connecting the horizontal run of the vent pipe to the vent termination, slide the black decorative wall thimble cover over the vent pipe.

STEP 6. Slide the appliance and vent assembly towards the wall, carefully inserting the vent pipe into the cap assembly. It is important that the vent pipe extend into the vent cap a sufficient distance with a minimum of 1¼" (3.2cm) overlap. Secure the connection between the vent cap pipe and the vent cap by attaching the two sheet metal straps extending from the vent cap assembly into the outer wall of the vent pipe. Use the two sheet metal screws provided to connect the straps to the vent pipe. Bend any remaining portion of the sheet metal straps back towards the vent cap, so the decorative wall thimble will conceal it (see left image in Figure 8).

STEP 7. Slide the decorative wall thimble up to the wall surface and attach with the screws provided. Apply decorative brass or chrome trim if desired (see right image in Figure 8).

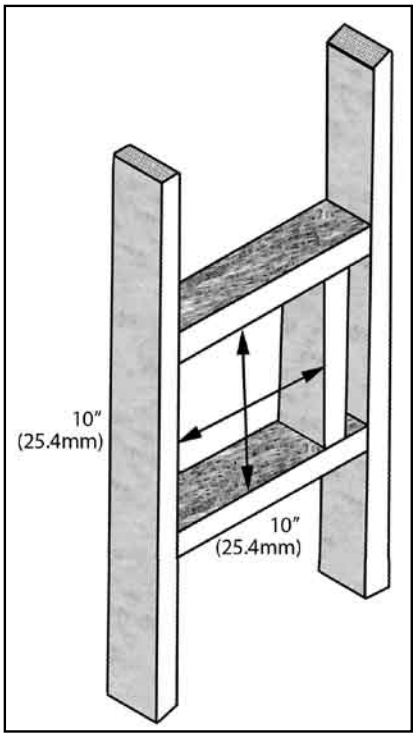

Figure 7: Wall Framing for 10" (25.4cm) x 10" (25.4cm) Hole for Horizontal Installation.

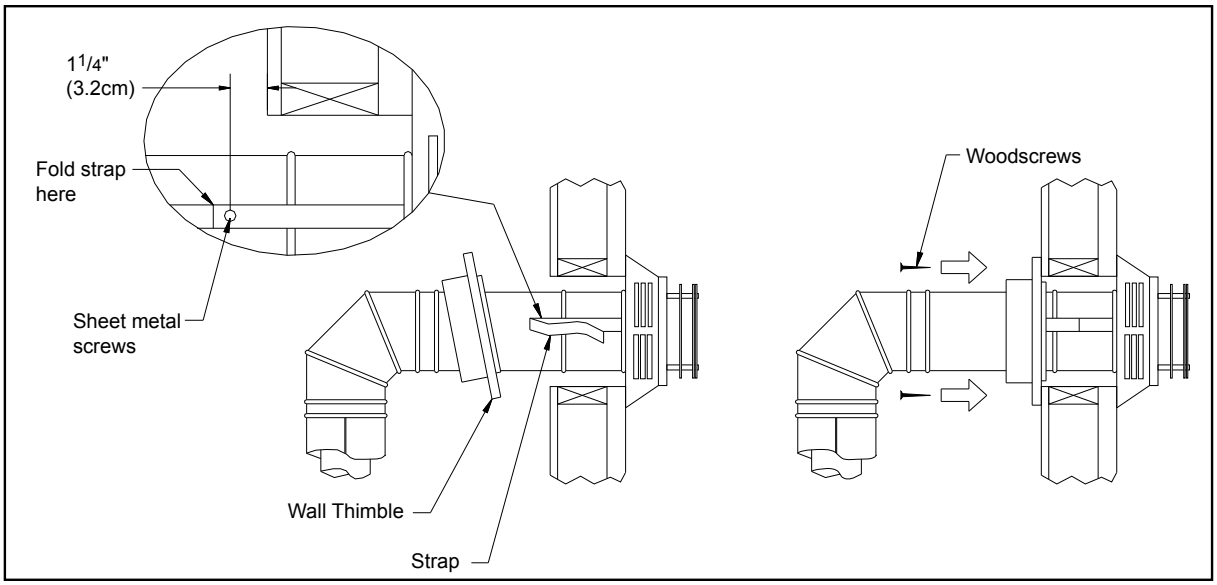

Figure 8: Installing Decorative Wall Thimble.

Initial Installation

QUALIFIED INSTALLERS ONLY

NOTES:

(1) The four wood screws provided should be replaced with the appropriate fasteners for stucco, brick, concrete, or other types of siding.

(2) For buildings with vinyl siding, a vinyl siding standoff, should be installed between the vent cap and the exterior wall (see Figure 9). Attach the vinyl siding standoff to the horizontal termination. The vinyl siding standoff prevents excessive heat from possibly melting the vinyl siding material. Note that the horizontal vent termination bolts onto the flat portion of the vinyl siding standoff (shaded area in Figure 9), so that an air space will exist between the wall and the vent termination.

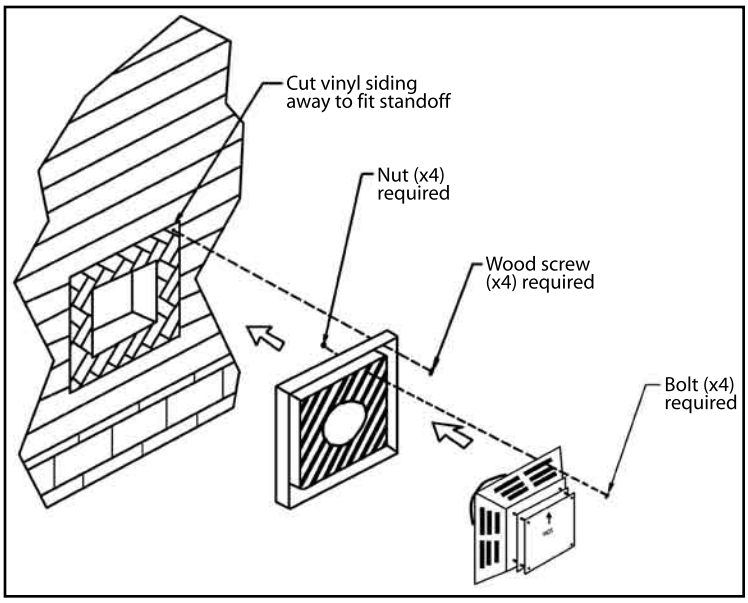

Figure 9: Installing Vent Cap with Vinyl Siding Stand-Off.

NOTES:

(1) The horizontal run of vent pipe must be level and **should have a ¼ inch rise for every one foot of run towards the termination.** Never allow the vent to run downward. This could cause high temperature and may present the possibility of a fire.

(2) The location of the horizontal vent termination on the exterior wall must not be easily blocked or obstructed. Refer to "Vent Termination Restrictions" section.

(3) When installing a vent pipe in a chase the minimum clearance to combustibles is 2" (5cm).

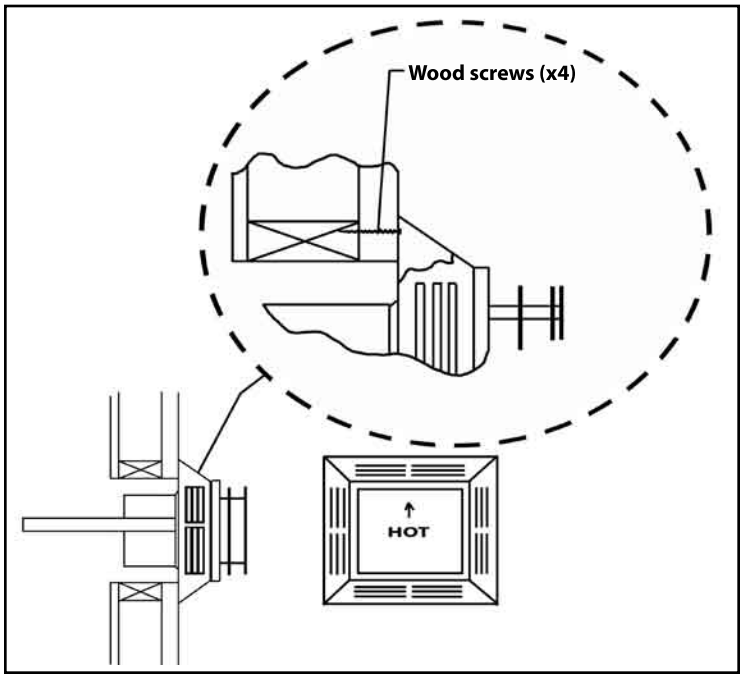

Figure 10: Installing Horizontal Vent Termination.

Vertical Installation:

STEP 1. Check the instructions for required clearances (air spaces) to combustibles when passing through ceilings, walls, roofs, enclosures, attic rafters, or other nearby combustible surfaces. Do not pack air spaces with insulation.

STEP 2. Set the gas appliance in the desired location. Drop a plumb bob down from the ceiling to the position of the appliance flue exit, and mark the location where the vent will penetrate the ceiling. Drill a small hole at this point. Next, drop a plumb bob from the roof to the hole previously drilled in the ceiling, mark the spot where the vent will penetrate the roof. Determine if ceiling joists, roof rafters, or other framing will obstruct the venting system. You may wish to relocate the appliance, or to offset, to avoid cutting load bearing members.

QUALIFIED INSTALLERS ONLY

STEP 3. To install the Round Support Box/Wall Thimble in a flat ceiling, cut a 10" square hole in the ceiling, centered in the hole drilled in Step 2. Frame the hole as shown in Figure 11.

STEP 4. Assemble the desired lengths of black pipe and elbows necessary to reach from the appliance adapter up through the Round Support Box. Insure that all pipe and elbow connections are in their fully twist-locked position.

STEP 5. Cut hole in the roof centered on the small hole placed in the roof from Step 2. The hole should be of sufficient size to meet minimum requirements for Clearance to Combustibles, as specified. Continue to assemble lengths of pipe and elbows necessary to reach from the ceiling support box up through the roofline. Galvanized pipe and elbows may be utilized in the attic, as well as above the roofline. The galvanized finish is desirable above the roofline, due to the higher corrosion resistance.

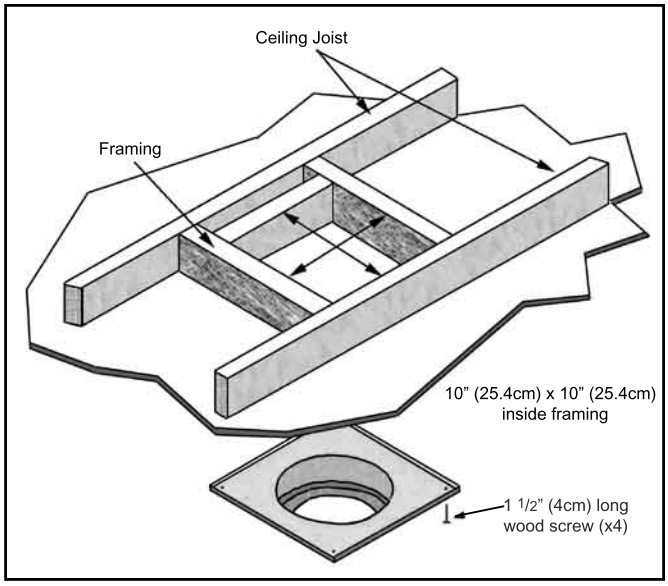

Figure 11: Wall Framing for 10" (25.4cm) x 10" (25.4cm) Hole for Vertical Installation.

STEP 6. Once the pipe sections have been joined, and run up through the hole in the roof, slip an elbow strap over the exposed sections, bend the support straps outwards, and push the elbow strap down to the roof level, as shown in Figure 12. Tighten the clamp around the pipe section. Use a level to make sure the pipe is truly vertical. With roofing nails, secure the support straps to the roof. Seal the nails holes heads with non-hardening mastic. Trim the excess length of the support straps that extend out beyond the edge of the flashing.

STEP 7. Slip the flashing over the pipe section protruding through the roof. Secure the base of the flashing to the roof with roofing nails. Use a non-hardening sealant between the uphill edge of the flashing and the roof. Insure the roofing material overlaps the top edge of the flashing as shown in Figure 12. Verify that you have at least the minimum clearance to combustibles at the roofline.

STEP 8. Continue to add pipe sections until the height of the vent cap meets the minimum code requirements. Refer to Figure 13 and Table 3. Note that for steep roof pitches, the vent height must be increased. In high wind conditions, nearby trees, adjoining roof lines, steep pitched roofs, and other similar factors can result in poor draft, or down drafting. In these cases, increasing the vent height may solve the problem.

STEP 9. Slip the storm collar over the pipe, and push it down to the top of the roof flashing as shown in Figure 12. Use the non-hardening sealant around the joint between the pipe and the storm collar.

STEP 10. Twist-lock the vent cap.

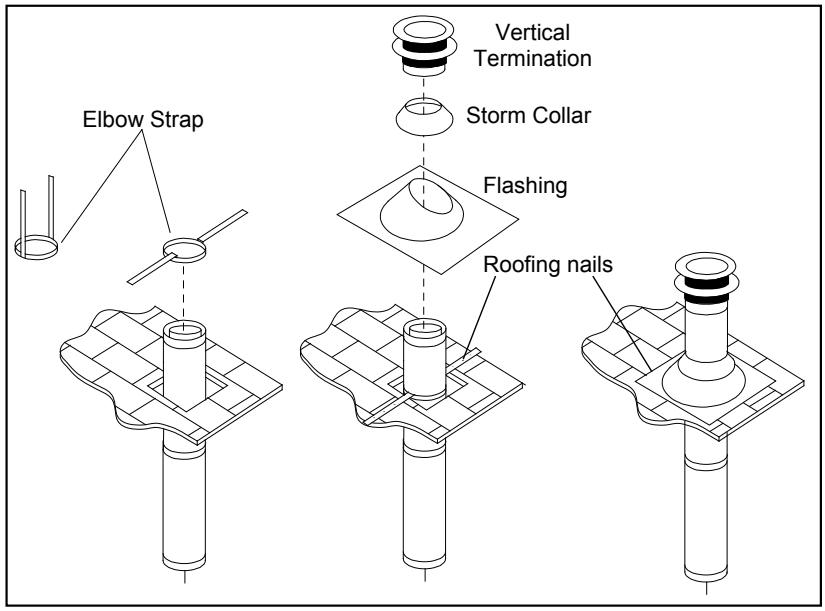

Figure 12: Vertical Vent Termination Installation.

QUALIFIED INSTALLERS ONLY

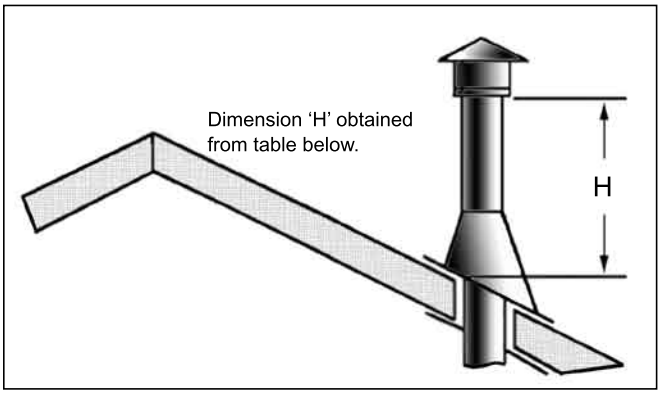

Figure 13: Height of Vertical Termination; Reference Table 3.

Roof Pitch	Minimum Height	
	Feet	Meters
Flat to 7/8	1	0.3
Over 7/12 to 8/12	1.5	0.46
Over 8/12 to 9/12	2	0.61
Over 9/12 to 10/12	2.5	0.76
Over 10/12 to 11/12	3.25	0.99
Over 11/12 to 12/12	4	1.22
Over 12/12 to 14/12	5	1.52
Over 14/12 to 16/12	6	1.83
Over 16/12 to 18/12	7	2.13
Over 18/12 to 20/12	7.5	2.29
Over 20/12 to 21/12	8	2.44

Table 3: Minimum 'H' for Figure 13

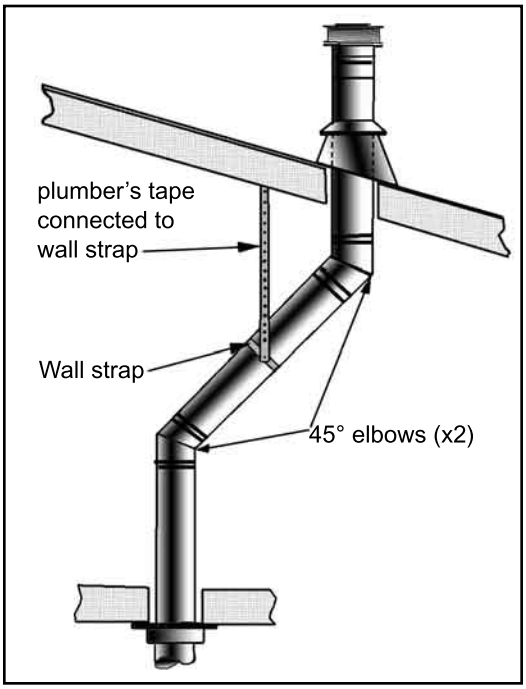

Figure 14: Use of Wall Straps.

NOTES:

(1) If an offset is necessary in the attic to avoid obstructions, it is important to support the vent pipe every 3 feet (91cm), to avoid excessive stress on the elbows, and possible separation. Wall straps are available for this purpose (see Figure 14).

(2) When ever possible, use 45° degree elbows instead of 90° degree elbows. The 45° degree elbow offers less restriction to the flow of flue gases and intake air.

NOTES:

(1) For multi story installations. A ceiling firestop is required at the second floor, and any subsequent floors (see Figure 15). The opening should be framed to 10" (25.4cm) x 10" (25.4cm) inside dimensions, in the same manner as shown in Figure 11.

(2) Any occupied areas above the first floor, including closets and storage spaces, which the vertical vent passes through, must be enclosed. The enclosure may be framed and sheetrocked with standard building materials. However consult the appliance manufactures installation instructions for the minimum allowable clearance between the outside of the vent pipe, and the combustible surfaces of the enclosure. Do not fill any required air spaces with insulation.

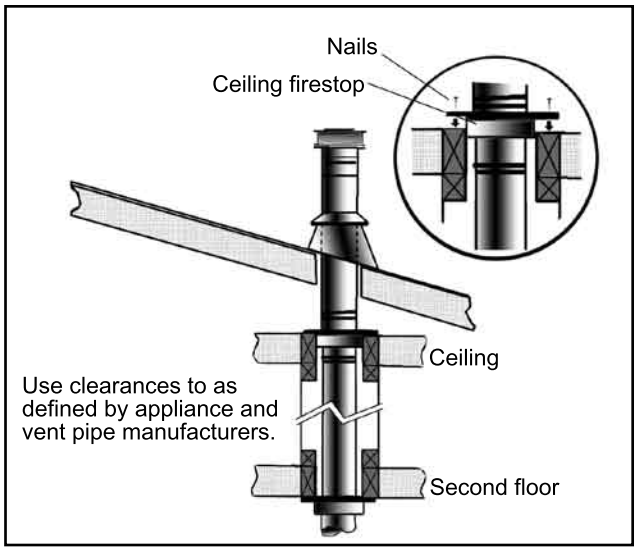

Figure 15: Multi-Story Vent Pipe Installation.

Initial Installation

QUALIFIED INSTALLERS ONLY

Cathedral Ceiling Installation:

STEP 1. Follow installation steps 1 and 2 under 'Vertical Installation'.

STEP 2. Using the plumb bob, mark the centerline of the venting system on the ceiling and drill a small hole through the ceiling and roof at this point. From the roof, locate the drill hole and mark the outline of the "Cathedral Ceiling Support Box".

STEP 3. Remove shingles or other roof coverings as necessary to cut the rectangular hole for the "Support Box". Cut the hole ⅛" larger than the "Support Box" outline.

STEP 4. Lower the "Support Box" through the hole in the roof until the bottom of the "Support Box" protrudes at least 2 inches (5cm) below the ceiling. Align the "Support Box" both vertically and horizontally with a level as shown in Figure 16. Temporarily tack the "Support Box" in the place through the inside walls and into the roof sheathing.

STEP 5. Using tin snips, cut the "Support Box" from the top corners down to the roofline, and fold the resulting flaps over the roof sheathing (Figure 17). Before nailing it in to the roof, run a bead of non-hardening mastic around the top edges of the "Support Box", to make a seal between the box and the roof. Clean out any combustible material from the inside of the "Support Box".

STEP 6. Complete the cathedral ceiling installation by following the same procedures outlined in Steps 4 through 9 for "Vertical Installation".

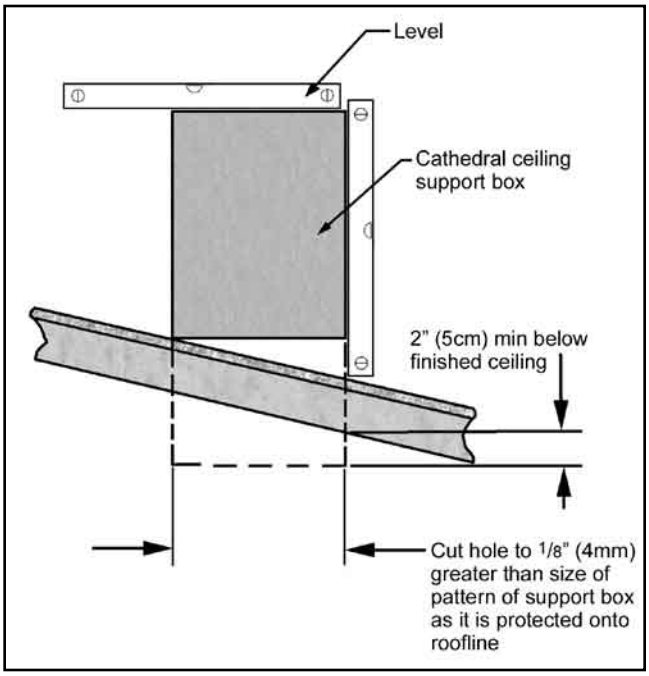

Figure 16: Cathedral Ceiling Support Box Leveling.

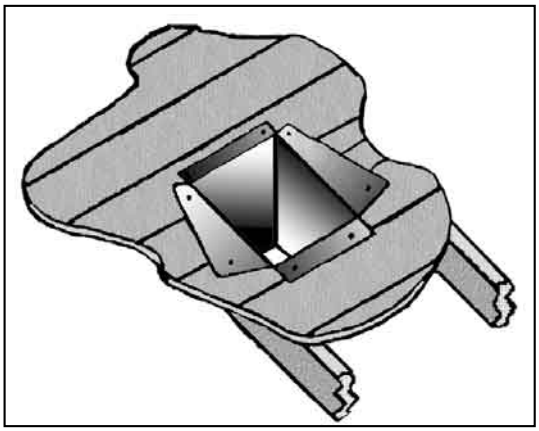

Figure 17: Cathedral Ceiling Support Box Installation.

Sherwood Industries Ltd. Venting Kit:

Inspect this kit to ensure this kit is complete and there is no damage to any of the components. If damage is present contact your dealer or your courier company. If some components are missing or damaged do not attempt the installation.

Decide on a location for the unit that will meet any or all, local code requirements. Refer to section 'Planning Your Installation' in this manual.

Set the appliance in the desired location. Check to determine if any wall studs, electrical wiring or plumbing pipes are in the way of the venting system as it passes through the wall. If obstructions are found in the wall it may be required to adjust the location of the appliance.

Set the appliance in the desired location. Temporarily place the 24" (61cm) section of pipe (without the crimped end) on the unit and install the 90° elbow pointing in the direction that the vent will exit the structure. Project a level line from the center point of the elbow. Using this center point, scribe a 10" (25.4cm) x 10" (25.4cm) hole on

QUALIFIED INSTALLERS ONLY

the wall. Cut the hole out on both the interior and exterior wall surfaces. Frame hole as shown in Figure 7. Install the wall thimble and secure this thimble on both the inner and outer wall surfaces.

With the appliance still in place install the 24" (61cm) horizontal section on the elbow and let this section of pipe protrude through the exterior wall. Mark this pipe so that it is flush with the exterior surface and cut this section of pipe. Dismantle the outer pipe sections.

Remove the 4" (10cm) x 4" (10cm) crimped flue connector from the vent kit. Install it onto the elbow on the unit applying a bead of mil-pac and three (3) screws evenly spaced.

Attach the flexible liner to the vent termination cap by placing a small bead of high temperature silicone on the vent terminal and slide the flex liner onto the vent terminal and secure with three (3) sheet metal screws evenly spaced.

Dress the flex liner through the wall thimble and attach the vent terminal to the outside of the house using 4 wood screws provided. (The use of non-hardening mastic should be used around the vent to ensure a watertight seal.)

Install two (2) spacers around the flex pipe (see Figure 18). Slide the horizontal section of pipe over the flexible liner and install through the wall thimble, ensure that this portion of pipe slides onto the vent termination cap. Slide the inside finished collar over the horizontal section of pipe and secure to wall using the screws provided. Slide the 90° elbow over the flex pipe. Stretch the flex liner to a length long enough to ensure the flex liner can be easily connected to the flue outlet of the appliance. Install the remaining spacers over the flexible liner and install the vertical section of pipe**. (DO NOT SLIP THESE SECTIONS OF PIPE TOGETHER, YOU WILL REQUIRE SOME MOVEMENT IN THESE PIPE SECTIONS IN ORDER TO SECURE THE FLEX PIPE TO THE FLUE OUTLET ON THE APPLIANCE.)**

Place a bead of high temperature silicone on the flue pipe and slide flex liner over collar, secure the flex liner with three (3) sheet metal screws evenly spaced.

Align all straight sections of pipe, slipping all joints together and installing three (3) sheet metal screws evenly spaced.

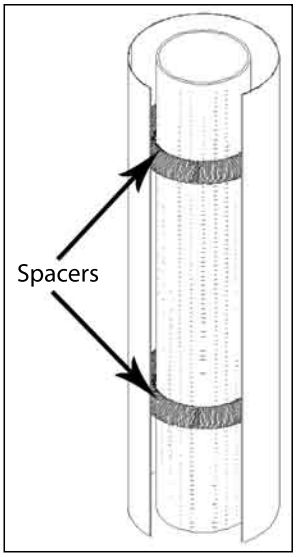

Figure 18: Spacers on Flex Pipe.

A small can of touch up paint has been supplied with this kit. Lightly touch up any scratches that might have occurred during the installation process.

Install brass decorative rings around each joint making sure this decorative ring covers the sheet metal screws which secure each section of pipe together and secure to vent pipe in the slotted tab on the backside of the pipe so that the fastener would not be easily seen.

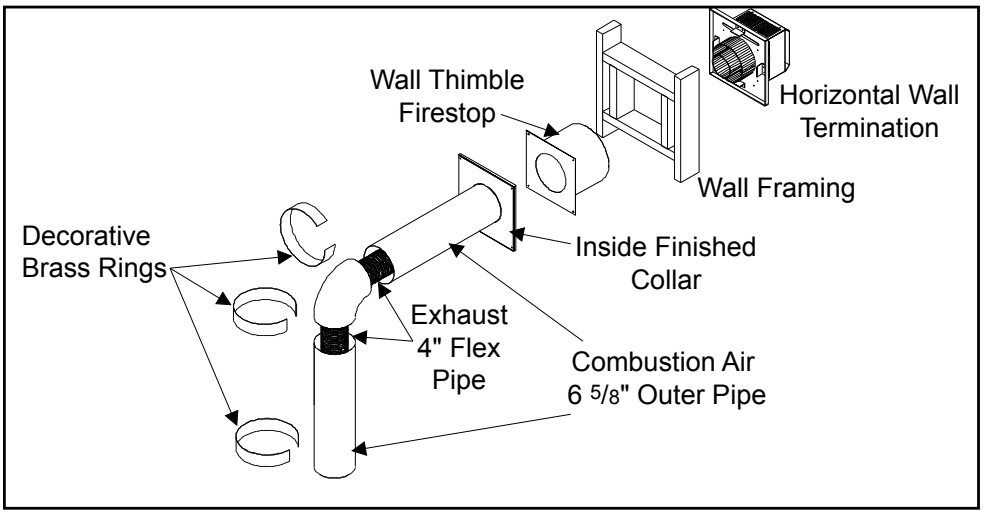

Figure 19: Assembly of Venting Kit.

Secure the horizontal section of pipe to the inside finished collar by installing a screw in the tab on the inside finished collar. **THIS WILL PREVENT THE PIPE FROM BEING DISCONNECTED AT THE VENT TERMINAL.**

Light the appliance and ensure proper operation.

Initial Installation

QUALIFIED INSTALLERS ONLY

Venting into a Class 'A' Chimney:

This model is also certified and tested to vent into CLASS 'A' wood stove chimneys.

Place the freestanding direct vent appliance in the desired location.

Using Simpson Dura Vent conversion kit, depend on the inner diameter of the CLASS 'A' chimney that this appliance is to be vented into.

Place a bead of high temperature silicone or mil-pac at each connection to ensure a tight seal.

NOTE: A 4" (10cm) flex liner must be used in the application.

NOTE: Use Simpson Dura Vent from the top of the appliance until this vent reaches the CLASS 'A' chimney. Install the retro adapter to the top section of GS direct vent pipe and install the flex liner to the retro adapter.

Fully liner the CLASS 'A' chimney with a minimum 4" (10cm) flex liner to the top of the CLASS 'A' chimney.

Placing a bead of high temperature silicone to the Simpson Cap adapter and securely attach the flex liner to the adapter.

Secure the cap adapter to the CLASS 'A' chimney ensuring an airtight seal.

Install the vertical termination cap.

Light the unit and ensure proper operation.

THE USE OF ANY EXISTING CHIMNEY AS AN AIR INTAKE IS NOT COVERED UNDER THE ANSI Z21.88-2002 CSA 2.33a-2002 TEST METHODS AND THE RESULTING ITS/WH PRODUCT CERTIFICATION. THE CODE AUTHORITY HAVING JURISDICTION MUST BE CONSULTED PRIOR TO PROCEEDING WITH THIS INSTALLATION METHOD.

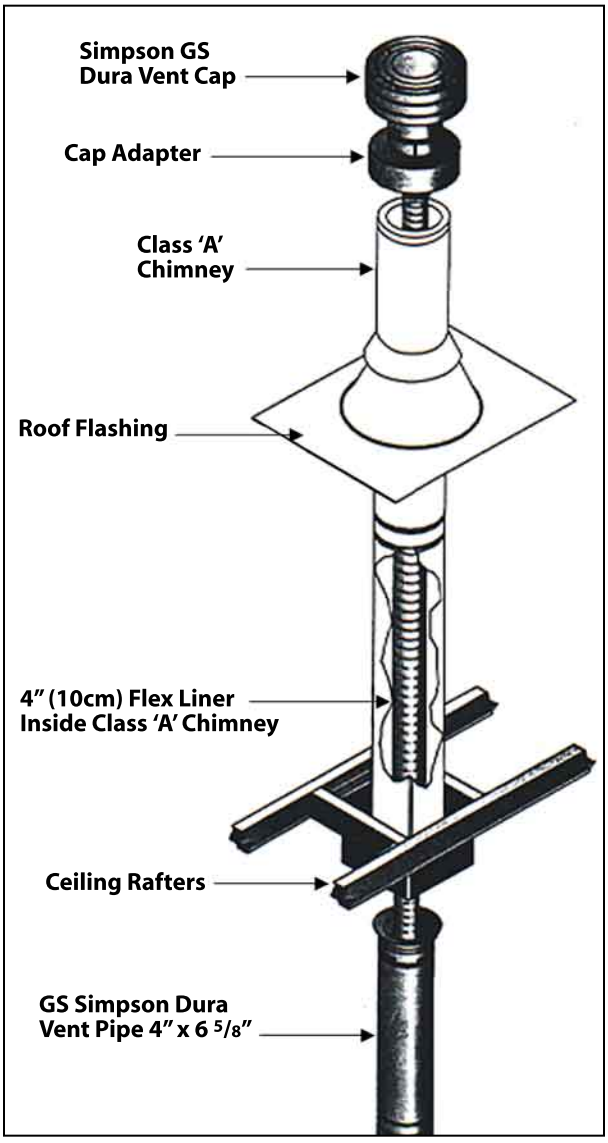

Figure 20: Assembly of Venting into a Class 'A' Chimney.

Converting Top Vented into Rear Vented:

This unit has been shipped as a 30,000 Btu top-vented freestanding unit. This unit can be converted to a rear vented unit for some installation applications.

1. To convert this unit to a rear vented model you must remove the flue pipe adapter and turn to the rear vent position. You must also change the main burner orifice if venting straight out the wall. See sections 'Converting Main Burner Orifice For Rear Vent Installation' and 'Installation of Rear Vented Appliance'.
2. Carefully remove the trivet and the stovetop. Place on a soft surface as not to damage the porcelain finishes.
3. Remove the four screws that hold the flue connection to the unit body (see Figure 21). Carefully remove the elbow being sure not to damage the gasket that is glued to the flue collar elbow.
4. Turn the elbow to the desired position and re-fasten with the screws removed form the previous step (see Figure 22).

QUALIFIED INSTALLERS ONLY

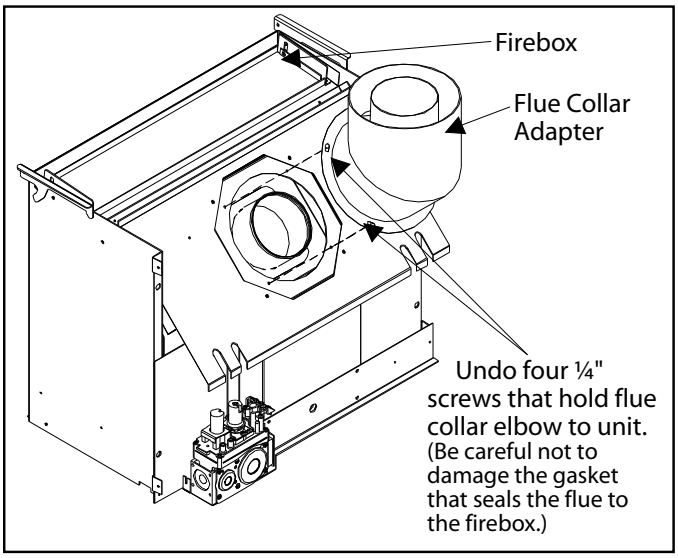

Figure 21: Step 3 of Converting Top Vented into Rear Vented.

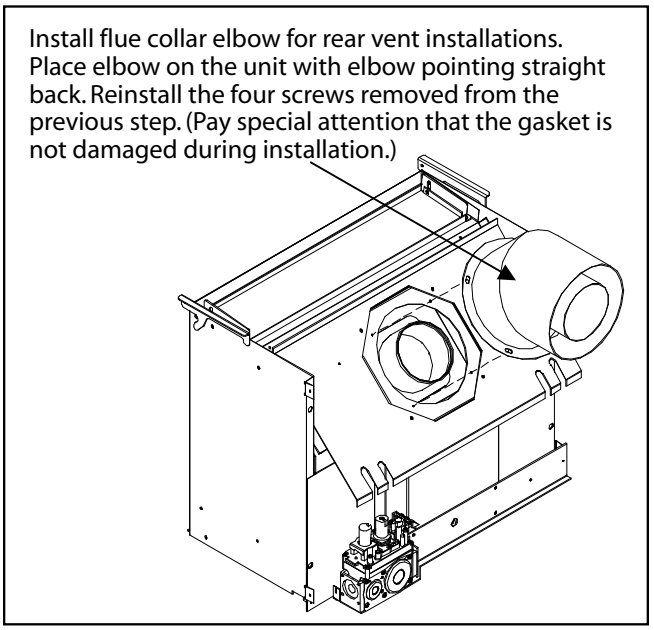

Figure 22: Step 4 of Converting Top Vented into Rear Vented.

Converting Main Burner Orifice For Rear Vent Installation:

Carefully lift the unit's top off, for Westport models be careful, the trivet is a separate piece and may fall out causing damage to porcelain finishes. Place the units top on a soft surface to prevent damage.

1. Lift up on inner door handles and remove door with glass.
2. Carefully remove the log set and ember material.
3. Remove the two screws (located on the outside edge of the burner) that hold the burner to the chassis inside the firebox.
4. Remove the burner from the firebox.
5. Using a ½" deep socket remove the main burner orifice from the rear of the unit.
6. If changing to LP (Propane gas) the pilot injector must also be replaced with the proper fuel type injector. Simply pull the pilot head straight up, using a 5/32" Allen key remove the pilot injector and replace the proper fuel type needed.
7. Re-assemble the appliance in the reverse order as above. Pay special attention when installing the burner that the venturi adjustment rod is properly installed into the venturi adjustment piece welded to the burner venturi tube. Also refer to "Installing Log Set and Embers"

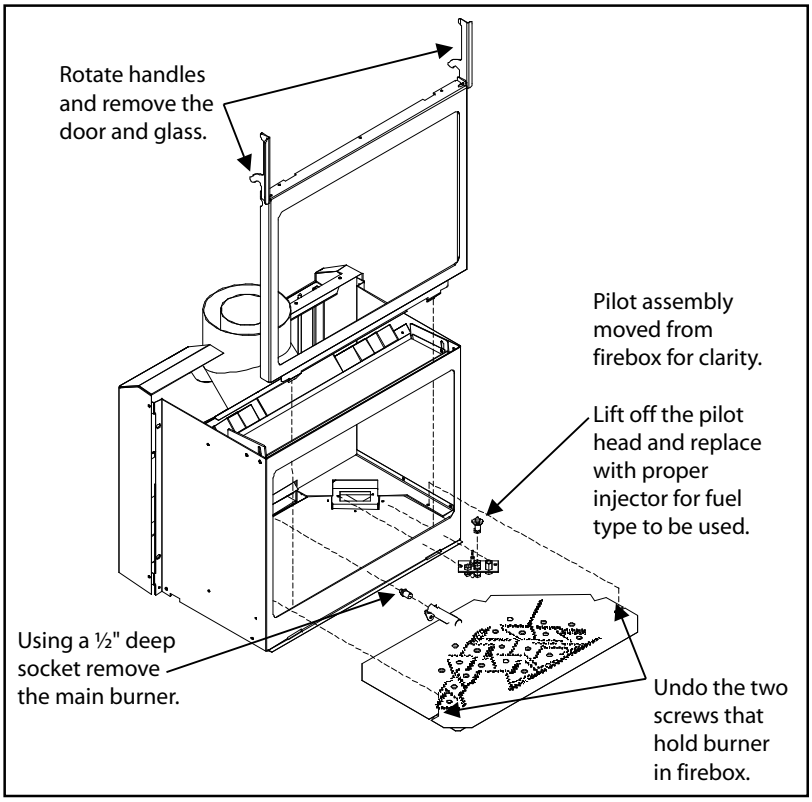

Figure 23: Converting Main Burner Orifice for Rear Vented.

Initial Installation

QUALIFIED INSTALLERS ONLY

Installation of Rear Vented; 20,000 BTU:

REAR VENTED 20,000 BTUs ONLY:

This model is designed for flat wall installation only were a vent is to be concealled. If more distance is required for a longer chimney or vent, Use TOP VENTED model for this type of installation.

NOTE: Vent pipe must be not be longer than 10" (25.4cm) maximum.

VENT RESTRICTOR. The vent restrictor should be placed in the open position. Do not alter this position. See 'Restrictor Settings' section.

Can not be used for corner installations.

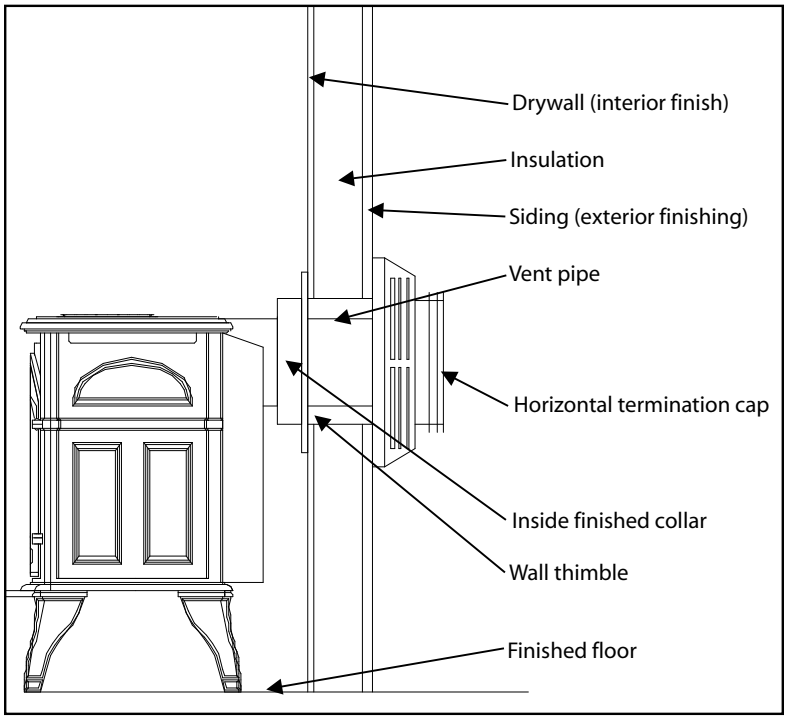

Figure 24: Installation for Rear Vented; 20,000 BTU.

Installation of Rear Vented; 30,000 BTU:

Place the unit into position.

Attach a small section of pipe on the unit and mark exterior wall where vent would pass through the wall.

Cut a 10" minimum hole in the wall to maintain clearances to combustibles. Frame hole as shown in Figure 7.

Install a wall thimble.

Install interior finished collar.

Install the vent section through the wall.

THIS UNIT MUST BE VENTED WITH A 36" (91cm) SNORKEL KIT IF UNIT IS RATED FOR 30,000 BTUs.

Seal around the vent terminal to the structure using a non hardening mastic.

Can not be used for corner installations.

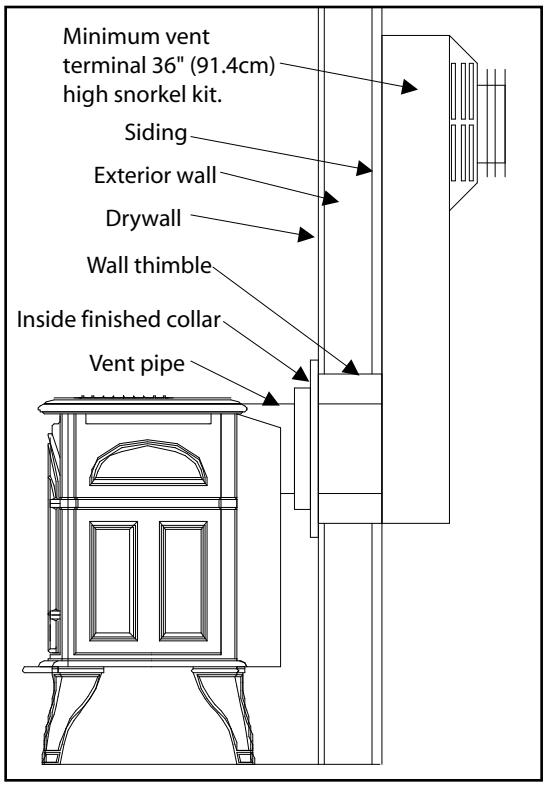

Figure 25: Installation for Rear Vented; 30,000 BTU.

Initial Installation

QUALIFIED INSTALLERS ONLY

Installation of Top Vented; Horizontal Termination:

This is the most common type of installation style.

Set the unit in place.

Install a minimum 24" (61cm) vertical chimney.

Install a 90° elbow, and mark the exterior wall where the vent would pass through.

Cut a 10" (25.4cm) minimum hole in the wall to maintain clearances to combustibles around vent pipe. Frame hole if as shown in Figure 7.

Install wall thimble.

Install interior finished collar

Install the vent section through the wall and then install the vent termination.

Seal around the termination using a non hardening mastic.

CORNER INSTALLATION:

This type of installation can be used in a corner installation. If a 90° elbow is used in the horizontal plane, 36" (91.4cm) must be subtracted from the allowable horizontal run shown in Figure 29.

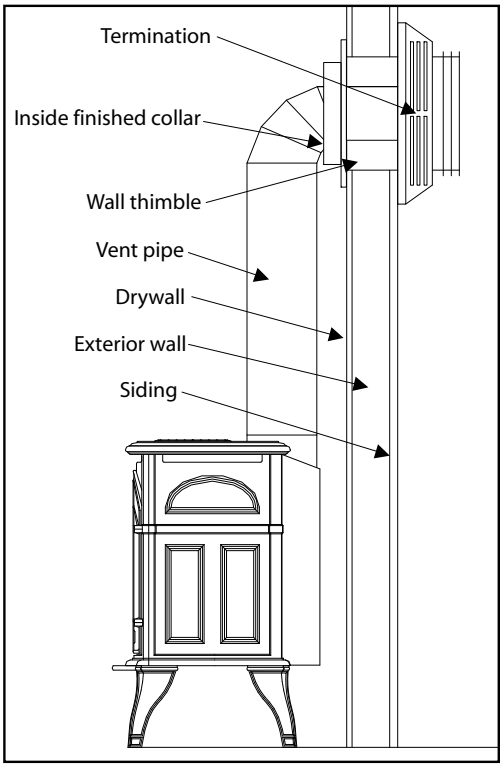

Figure 26: Installation for Top Vented; Horizontal Termination.

Installation of Top Vented; Vertical Termination:

Place the unit in place.

Drop a plumb bob from the ceiling to the center point of the flue outlet.

Cut a 10" (25.4cm) hole in the ceiling and the roof. Refer to Figure 11.

Install the ceiling support and insulation guard.

Install the roof flashing. Ensure that the roof flashing is installed under the roofing material so that a watertight seal is created.

Install the flue pipe from the top of the unit through the roof.

Ensure that all flue pipe and unit maintain required clearances to combustibles.

CORNER INSTALLATION:

This type of installation can be used in a corner installation. If a 90° elbow is used in the horizontal plane, 36" (91.4cm) must be subtracted from the allowable horizontal run shown in Figure 29.

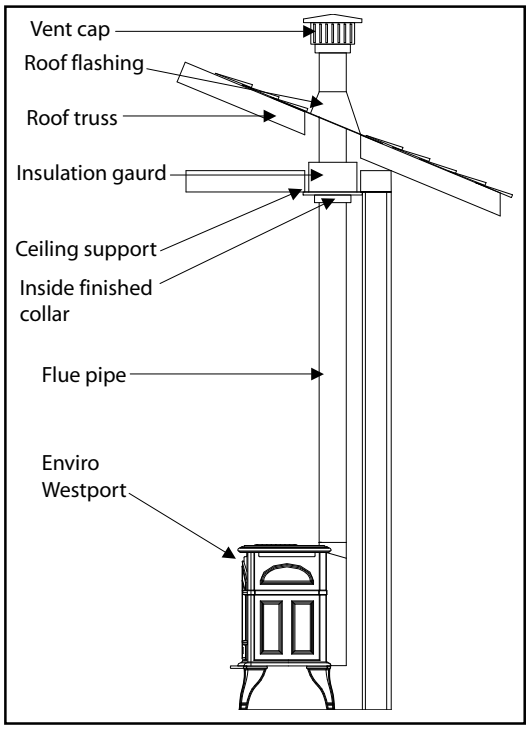

Figure 27: Installation for Top Vented; Vertical Termination.

Initial Installation

QUALIFIED INSTALLERS ONLY

Vent Restrictor and Settings:

The **ENVIRO** WESTPORT / BEDFORD has been designed with a built in restrictor plate.

The restrictor is designed to enhance flame appearance when installing this unit with vertical chimneys as well as installations with longer horizontal vent applications. Use the following chart to adjust the vent restrictor plate for the proper setting.

To access vent restrictor remove the valve cover plate from the right rear corner of the unit by undoing the two fastening screws.

Loosen the ¼" hex head bolt and adjust to the correct setting.

Slide the hex head bolt to the next setting and re-tighten the bolt to secure in place.

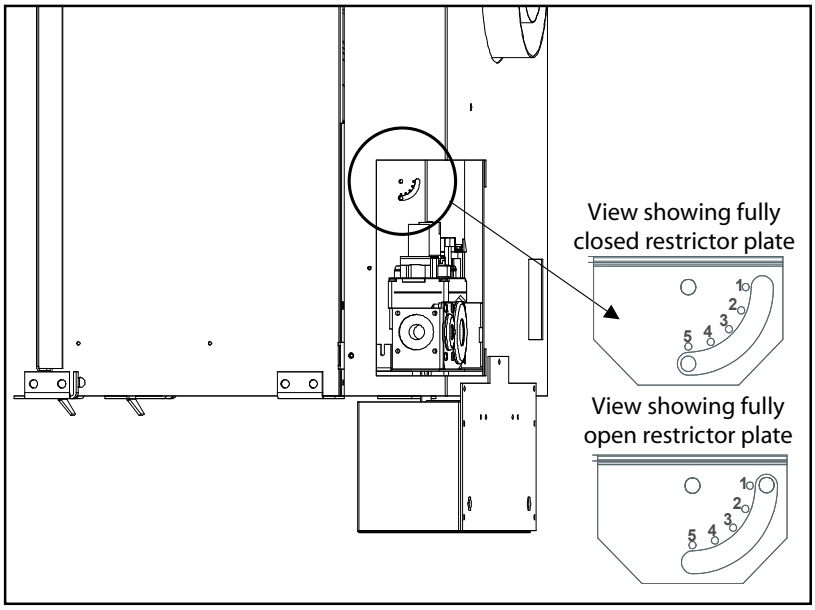

Figure 28: Restrictor plate settings.

Restrictor Setting vs Vent Pipe Length:

The maximum length of flue that can be attached to the **ENVIRO** WESTPORT would be 300" [25'] (7.62m) vertical or 204" [17'] (5.19m) vertical with a horizontal vent length of 96" [8'] (2.44m). Your total vent pipe length must be within the shaded area of Figure 29. If a 90° elbow is used in the horizontal plane, 36" [3'] (91.4cm) must be subtracted from the allowable horizontal run.

Follow Figure 29 to determine were the vent restrictor should be set.

The numbers in this chart represent the actual vent restrictor settings. Although the numbers do not appear on the unit use this as a guide to follow.

Undo the setscrew and adjust the restrictor to the correct setting.

Ensure that the setscrew is re tightened and the unit is checked for proper operation.

Wait for unit to warm up to operating temperature to ensure proper and clean burning unit.

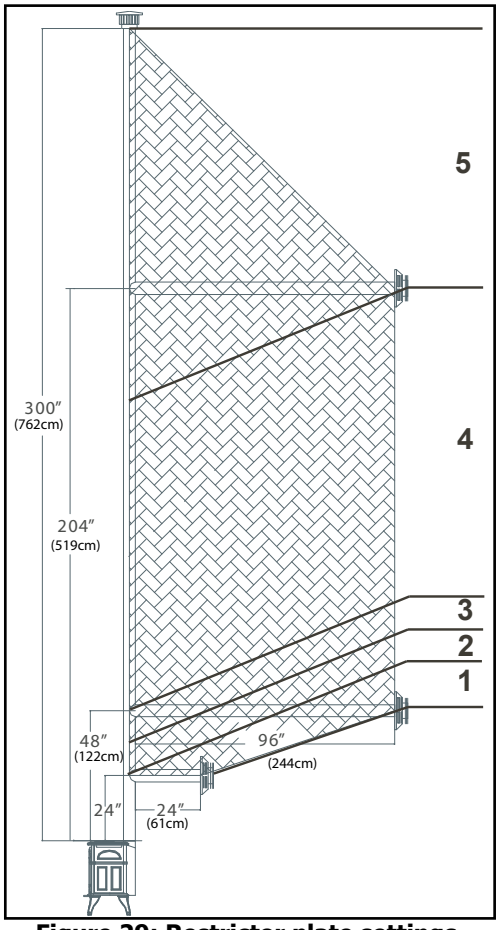

Figure 29: Restrictor plate settings.

QUALIFIED INSTALLERS ONLY

Electrical Requirements For Gas Valve and Optional Blower:

The **ENVIRO** WESTPORT/ BEDFORD will operate without electrical power. This model has a millivolt gas control, which uses the pilot flame to generate enough electricity to operate the main burners. The appliance when equipped with an optional blower must be electrically connected and grounded in accordance with local codes or in the absence of local codes, with the current CSA C22.1 CANADIAN ELECTRICAL CODE Part 1, SAFETY STANDARDS FOR ELECTRICAL INSTALLATIONS, OR THE NATIONAL ELECTRICAL CODE ANSI / NFPA 70 in the U.S.

WARNING: Electrical grounding instructions. This appliance is equipped with a three-prong (grounding) plug for your protection against shock hazard, and must be plugged directly into a properly grounded three-prong outlet. **DO NOT** cut or remove the grounding prong from this plug.

CAUTION: Label all wires prior to disconnection when servicing controls. Wiring errors can cause improper and dangerous operation. Verify proper operation after servicing.

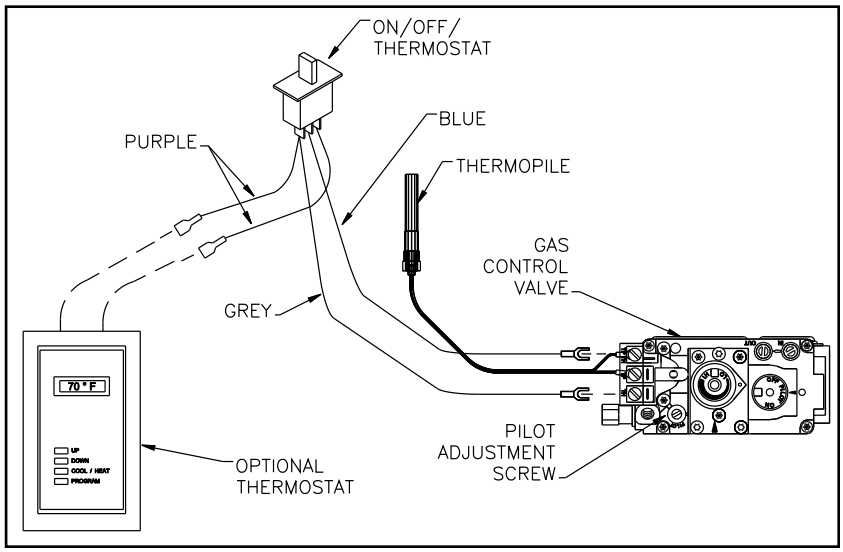

Figure 30: Gas Control Valve and Optional Thermostat Wiring.

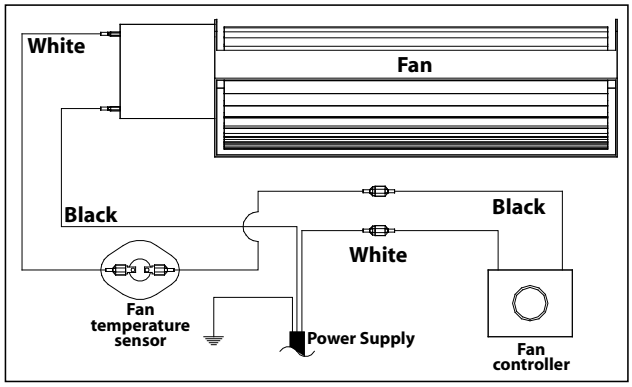

Figure 31: Optional Blower (Fan) Wiring.

Installing Optional Blower:

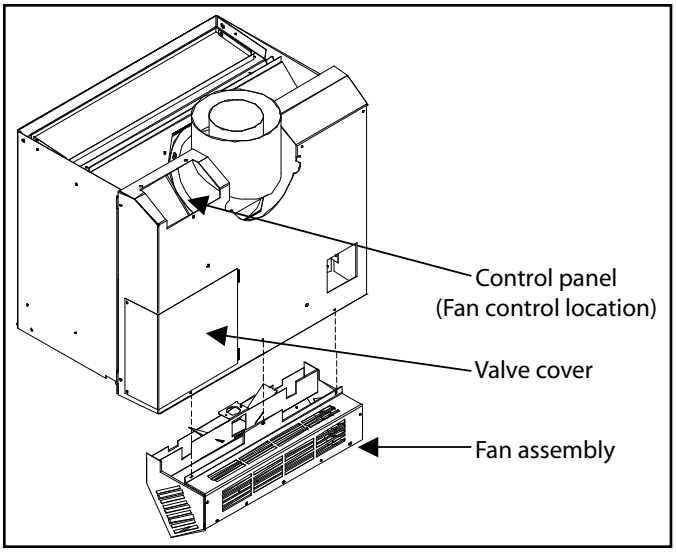

Figure 32: Optional Blower (Fan) Installation.

Remove the pre-assembled blower from the packaging. Inspect the blower for damage. If damage is noticed call your dealer, distributor or courier company and have components replaced.

Place the fan assembly behind the unit and secure with the three screws provided, (as shown in Figure 32).

Open the gas valve cover. Carefully cut the decal portion on the control panel and install the fan control switch in this location. See Figure 31 for wiring of optional blower.

Plug the fan assembly into the wall outlet and turn the unit on to ensure fan operation.

Initial Installation

Fuel Conversion:

"Warning": This conversion kit shall be installed by a qualified service technician in accordance with the manufacturer's instructions and all applicable codes and requirements of the authority having jurisdiction. If the information in these instructions is not followed exactly, a fire, explosion or CO poisoning may result. The qualified service agency is responsible for the proper installation of this kit. The installation is not proper or complete until the operation of the converted appliance is checked as specified in the owner's conversion kit.

Please read and follow these instructions. Also please read the instruction guidelines provided by S.I.T on how to remove and install the HI-LOW regulator.

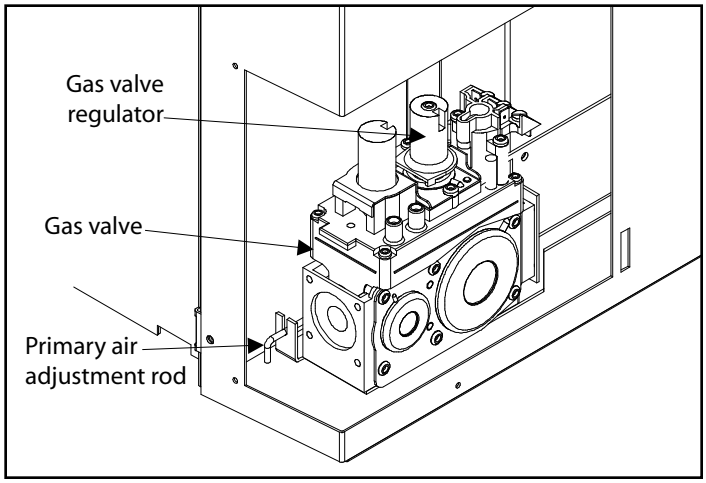

Figure 33: Gas Valve In Place on Unit.

STEP 1. Carefully inspect all parts supplied with this conversion kit.

STEP 2. Shut the gas off and disconnect the main gas line from the unit.

STEP 3. Open the door by lifting the cast iron top off of the unit. Pull the two handles straight up to unlatch the door. Using the two latches lift the door assembly straight up and out of the unit. Swing the front doors open or remove for access the inside of the firebox.

STEP 4. Change the regulator on the top of the gas valve. (Follow the instructions provided by S.I.T)

STEP 5. To change the pilot orifice, simply pull the pilot hood straight up to access the pilot injector. Using a 5/32" Allen key remove the pilot injector.

STEP 6. Install the new pilot injector supplied with this conversion kit, simply screw the new injector inside the pilot hood and reinstall pilot hood by placing hood on the assembly lining up the key way and snap into place.

STEP 7. Remove the main burner orifice with a ½" deep socket.

STEP 8. Install the new orifice supplied. Be sure to put a bead of pipe thread sealant or approved Teflon tape on the orifice before installing into the burner assembly.

STEP 9. Re-install burner tray, log set and door.

STEP 10. Reconnect the gas line to the unit. Do a leak check using soap and water solution or an approved method on the gas supply line.

STEP 11. Re-light the appliance to insure proper operation and proper flame appearance.

STEP 12. MAKE SURE that the sticker provided by S.I.T is installed to signify that this valve has been converted to a different type of fuel. Also make sure that the rating plate has a conversion label to show that this unit has been converted to a different fuel type.

A VISUAL CHECK OF THE REGULATOR KNOB IS NECESSARY TO DETERMINE WHETHER OR NOT THE REGULATOR IS THE CORRECT PART. A 50% TURN DOWN REGULATOR WILL HAVE ONLY ONE CORNER ON THE KNOB.

1 50% turn down HI-LOW Regulator w 3 T-20 Torx screws
1 pilot injector
1 Main orifice
Conversion instructions.
Labels to show conversion.

	Natural Gas	Propane
Pilot Orifice	.62mm	.35mm
Burner Orifice Top	#39 DMS	#53 DMS
Venturi Setting	1/16" min.	3/16" min.
Burner Orifice Rear	#46 DMS	#55 DMS

Table 4: Orifice Information.

Initial Installation

Gas Line Connection and Testing:

WARNING: Only persons licensed to work with gas piping may make the necessary gas connections to this appliance.

GAS LINE CONNECTION

- This stove is equipped with a certified flexible pipe located on the right side of the unit terminating in a 3/8" male NPT fitting. Consult your local authorities codes or the CAN/CGA B 149 (1 or 2) installation code in Canada, or in the USA gas installations follow either local codes or the current edition of the National Fuel Gas Code ANSI Z223.1.
- The efficiency rating of this appliance is a product thermal efficiency rating determined under continuous operating conditions and was determined independently of any installed system.

The appliance and its shutoff valves must be disconnected from the gas supply piping system during any pressure testing where the pressure exceeds ½ PSIG (3.45kpa) or damage will occur to the valve.

The appliance must be isolated from the gas supply piping system by closing its individual manual shutoff valve during any pressure testing of the gas supply piping system at test pressures equal to or less than ½ psig (3.45kpa).

Always check for gas leaks with a soap and water solution after completing the required pressure test.

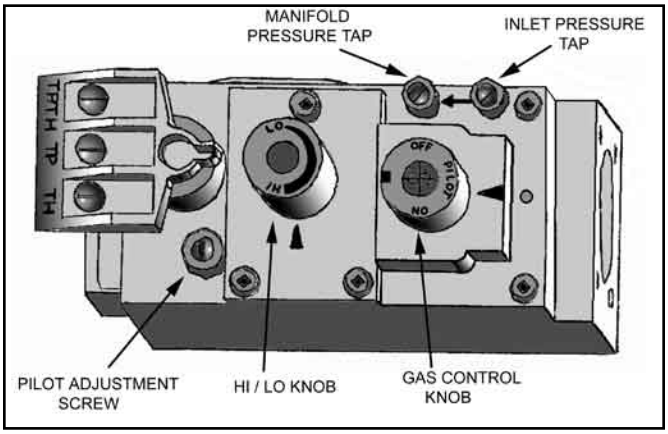

Figure 34: Fully Labeled Gas Valve.

TO TEST VALVE PRESSURES

The pressure taps are located on the left side of the valve

- Turn set screw 1 turn counter clockwise to loosen,
- Place 5/16" (8 mm) I.D. hose over pressure tap system.
- Check pressures using a manometer.
- When finished, release pressure, remove hose & tighten setscrew.

	Natural Gas	Propane
Main Burner	Top Vent #39 DMS Rear Vent #46 DMS	Top Vent #53 DMS Rear Vent #55 DMS
Manifold Pressure	3.8" wc/0.95KPa	11.0" wc/2.7KPa
Min. Manifold Pressure	1.1" wc/0.27KPa	2.7" wc/0.67KPa
Max Supply Pressure	7.0" wc/1.74KPa	13.0" wc/3.28KPa
Min. Supply Pressure	5" wc/1.24KPa	12.0" wc/2.98KPa
Max BTUH Input	30,000 BTU/8.80KW 20,000 BTU/5.86KW	26,500 BTU/7.76KW 20,000 BTU/5.86KW
Min. BTUH Input	17,000 BTU/4.98KW 12,000 BTU/3.51KW	14,000 BTU/4.10KW 11,000 BTU/3.22KW

Table 5: Pressure and BTU Information.

NEVER USE AN OPEN FLAME FOR LEAK TESTING.

Secondary Installation

Installation of Log Set and Embers:

The placement of the logs is not arbitrary. If they are positioned incorrectly, the flames can be "pinched" and will not burn correctly. The burner come with four three (4) locator pins, and the right log has two (2) ledges which make alignment easier. Using the pictures provided, carefully set the logs in place.

NOTE: The logs are fragile and should be handled gently.

CAUTION: Use only the type of ember material supplied with this appliance. Due to the irregular size of the ember material there may be more than required. The use of other foreign materials on the burners may create dangerous conditions.

If over time, through cleaning and servicing, these embers require replacement, contact the nearest ENVIRO dealer for replacement embers.

1. Carefully remove logs from box. Check to ensure there is no damage. It is very important to install all logs in their proper position to insure safe, optimum operating conditions.

2. Place the log set into the firebox. Locate each log by seating it down onto the burner tray support pins. Follow the plan view provided to the right for proper log placement.

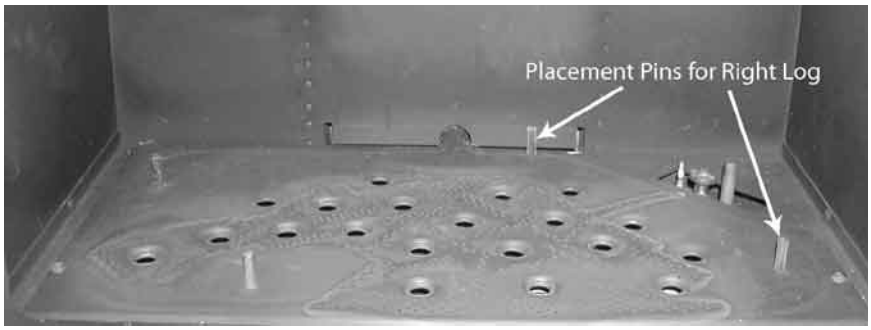

Figure 35: Step 1 of Log Placement.

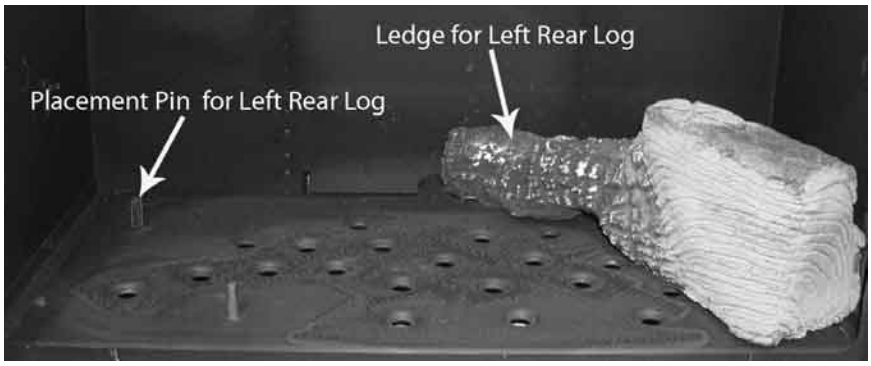

Figure 36: Step 2 of Log Placement.

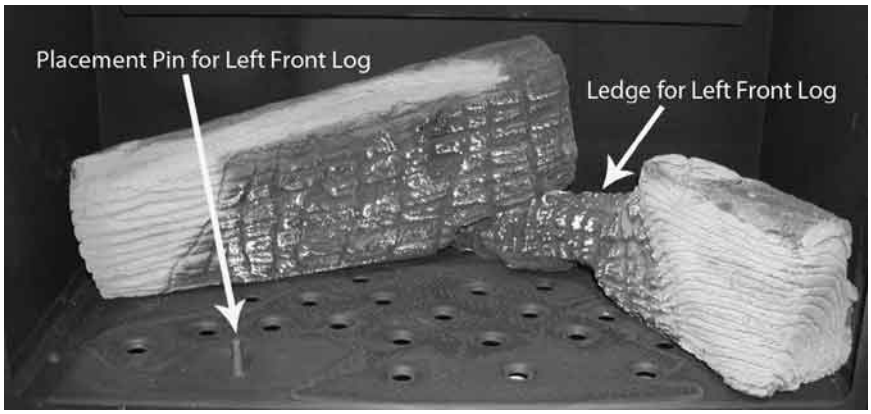

Figure 37: Step 3 of Log Placement.

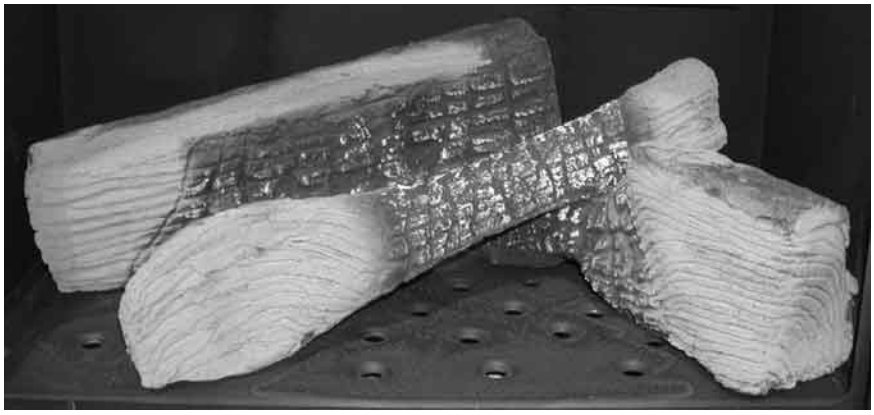

Figure 38: Step 4 of Log Placement.

3. A bag of ceramic fiber embers and rock wool embers is provided gently remove the ember material from the plastic bag. Spread a layer loosely across the burner tray. Do not allow any embers to rest against pilot assembly. (See diagram provided for proper ember placement.)

4. DO NOT pack this ember material as this could create an unsafe condition, leave embers loose

5. Upon the first light up, watch for ignition to **ALL** burner ports. If a long delay is noted: First, wait for the appliance to cool down.

- Open the front door of the appliance.
- Check to carefully reposition the embers making sure that burner ports are not plugged solid or blocked.

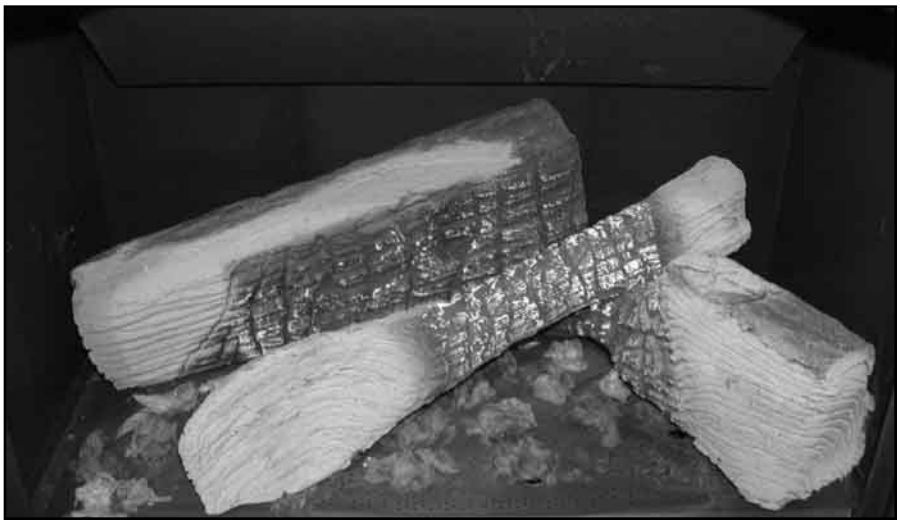

Figure 39: Log Placement with Embers.

Important note: When the unit is turned on for the first time, It should be turned onto high without the fan on for the first 4 hours. This will cure the paint, logs, gasket material and the other products used in the manufacturing process. It is advisable to open a window or door, as the unit will start to smoke and can irritate some people. After the unit has gone through the first burn turn the unit off including the pilot, let the unit get cold then remove the glass door and clean it with a good gas fireplace glass cleaner, available at your local ENVIRO dealer.

See Routine Maintenance And Service on how to remove door to clean glass.



Figure 40: Appliance Burning.

CAUTION: NEVER OPERATE THIS APPLIANCE WITH THE DOOR REMOVED.

Operating Instructions

FOR YOUR SAFETY READ COMPLETELY BEFORE OPERATING.

WARNING: IF YOU DO NOT FOLLOW THESE INSTRUCTIONS EXACTLY, A FIRE OR EXPLOSION MAY RESULT CAUSING PROPERTY DAMAGE, PERSONAL INJURY OR LOSS OR LIFE.

A) This appliance is equipped with a pilot that must be lit by hand by following these instructions exactly.

B) BEFORE LIGHTING smell all around the appliance area for gas, and next to the floor because some gas is heavier than air and will settle on the floor.

WHAT TO DO IF YOU SMELL GAS:

- Do not try to light any appliance.
- Do not touch any electrical switch; do not use any phone in your building.
- Immediately call your gas supplier from a neighbor's phone. Follow the gas supplier instructions.
- If you cannot reach your gas supplier, call the fire department.

C) Use only your hand to push in or turn the gas control knob. Never use tools. If the knob will not push in or turn by hand, do not attempt to repair it. Call a qualified service technician. Force or attempted repair may result in a fire or explosion.

D) Do not use this appliance if any part has been under water. Immediately call a qualified service technician to inspect the appliance and to replace any part of the control system and any gas control which has been under water.

Lighting Instructions:

1. STOP! Read the safety information above.
2. Turn off all electrical power to the appliance.
3. Turn the gas control knob clockwise to the "off' position.
4. Open door. Wait five (5) minutes to clear out any gas. Close door. If you smell gas including near the floor, STOP! Follow "B" in the above safety information. If you don't smell gas go to next step.
5. Find the pilot located to the back left hand corner, behind the left rear log.
6. Turn gas control knob counter-clockwise to "PILOT".
7. Push the gas control knob in fully and hold. A BATTERY operated electronic igniter will light the pilot. Keep knob depressed for about 30 seconds after pilot is lit. Release knob. If pilot goes out, repeat steps 4 through 6.

   WARNING: The gas valve has an lockout device which will not allow the pilot burner to be re-lit until the thermocouple has cooled.

   If the knob does not pop up when released, stop and immediately call your service technician or gas supplier.

   If the pilot will not stay lit after several tries, turn the gas control knob to "OFF" and call your service technician or gas supplier.
8. Turn gas control knob counter-clockwise to the "ON" position. Flip burner switch to "ON". Turn "HI / LO" knob to the desired setting. Turn on all electrical power to the unit.

NOTE: Check to be sure the pilot flame engulfs the thermocouple and that the burners light completely, see figure to right.

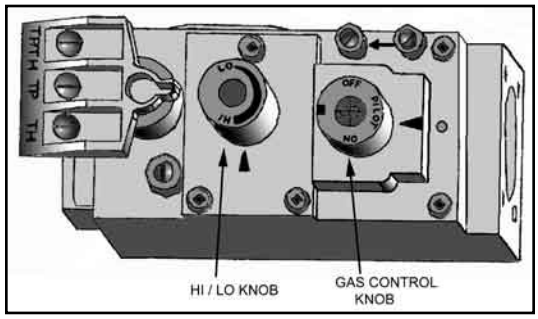

Figure 41: Gas Valve.

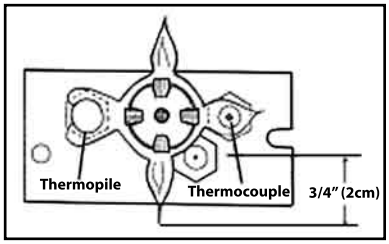

Figure 42: Pilot Burning.

Turning Gas Off To Appliance:

1. Flip burner switch to off, to turn off burners only.
2. Turn the gas control knob clockwise to "OFF". DO NOT FORCE
3. Turn off all electrical power to the appliance if service is to be performed.

Routine Maintenance and Service

Periodically check to ensure that your system is clean.

Periodically check the pilot and burner. Check to see that all the burner ports are clean and clear. Check the pilot head for blockage. Check to ensure the pilot flame is blue with no or very small yellow tips.

OPENING THE DOOR

Turn unit off and wait until the appliance has cooled down.

Remove the unit top from the unit by lifting straight up.

Lift the two door handles located on either side of the door and lift the glass door assembly straight up and out (see Figure 43 and 44).

Carefully open the two doors or remove if necessary.

Ensure the door is properly fastened after cleaning before attempting to re-light the appliance.

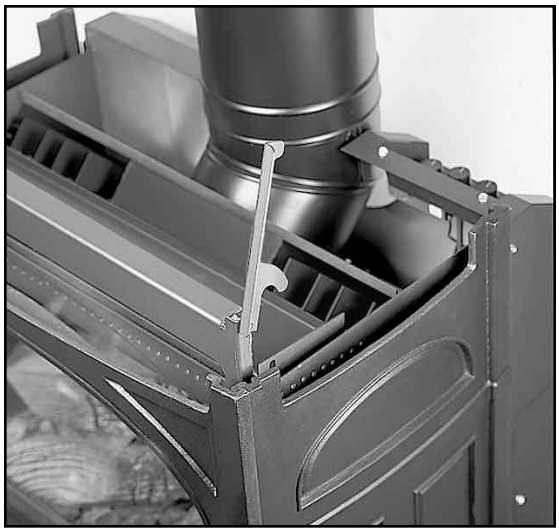

Figure 43: Handles for Removing Door.

CLEANING THE GLASS

Do not clean glass when hot

It will be necessary to clean the ceramic glass periodically. During a cold start up, condensation will sometimes form on the glass. This is a normal condition with all gas fireplaces and stoves. However, this condensation can allow dust and lint to cling to the glass surface. Initial paint curing of the appliance can leave behind a slight film on the glass. This is a temporary problem. It is therefore recommended that the glass be cleaned initially after about the first two weeks of use.

Depending upon the amount of use, cleaning should be required no more than two or three times per season.

To clean the door, use a mild glass cleaner and a soft cloth. Abrasive cleaners will damage the glass and gold surfaces.

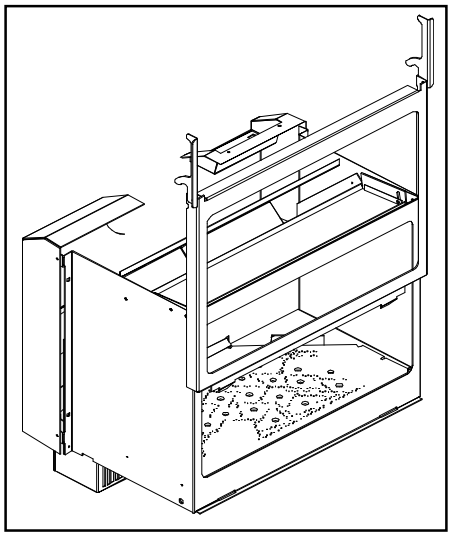

Figure 44: Removing of Door.

TO REPLACE DOOR GLASS

The glass in this appliance is ceramic. If the glass is damaged or broken a factory replacement must be fitted.

To Replace:

- Open door following above instructions.
- Install the new piece of glass with the large bulb in the gasket tape against the unit. Place the joint in the tape in a bottom corner use RTV hi-temp to adhere glass to frame. Let dry 2hrs. Replace door on unit.

Glass must be purchased from an ENVIRO dealer. **No substitute materials are allowed.**

Routine Maintenance and Service

CLEANING THE INSIDE OF THE FIREBOX

Remove the log carefully from the firebox. Gently remove the embers and place on a piece of paper towel, until ready to replace.

Vacuum the bottom of the firebox thoroughly. Carefully clean off any dust on the logs and remove any lint from the main burner and pilot burner.

After carefully replacing the log and embers in their correct positions, and the door has been resealed, re-light the pilot, following the instructions on the attached label.

CLEARANCES MUST BE SUFFICIENT TO ALLOW ACCESS FOR MAINTENANCE AND SERVICE

WARNING: Failure to position the parts in accordance with these diagrams or failure to use only parts specifically approved with this appliance may result in property damage or personal injury.

ELECTRONIC IGNITION (BATTERY REPLACEMENT)

If the unit does not spark when lighting, the battery in the electronic ignition could need replacing.

Located on the left hand rear corner of the unit is a small rectangular hole. Located here is the electronic ignition module.

Remove the battery cover and replace battery using 1-A-A. battery.

Reinstall the battery cover and check for spark by depressing the pilot knob located on the control panel.

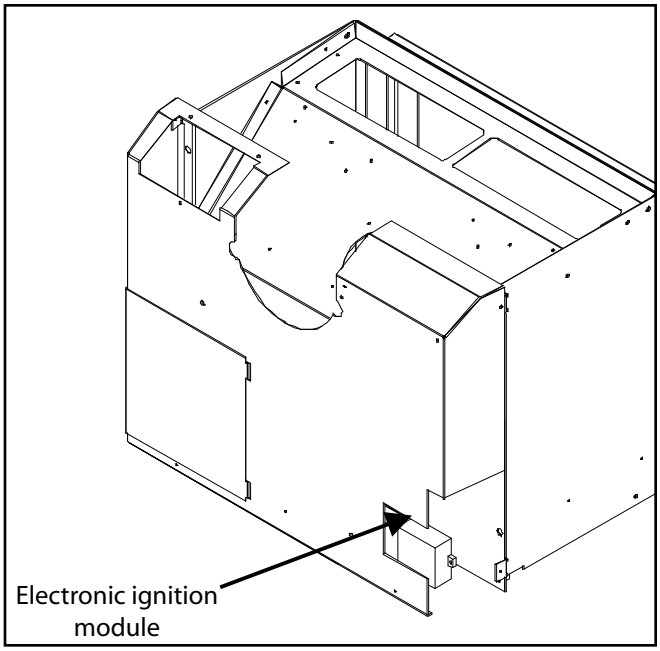

Figure 45: Electronic Ignition Module Location.

Trouble Shooting

Problem	Possible Cause	Solution
Spark will not light the pilot after repeatedly pressing the spark ignitor	Defective piezo ignitor.	• Check connections to ignitor. • If ignitor connections are good but no spark, replace ignitor.
	Broken spark electrode.	• Check for broken ceramic insulation. • Replace electrode if broken.
	Low battery or bad electronic module.	• Replace the electronic module. • Replace the battery in module.
	Misaligned spark electrode.	• If spark is not arcing from electrode to pilot - adjust by loosening the screws on the pilot base. Adjust away from burner and retighten.
Pilot will not remain lit	Problem with thermocouple circuit.	• Check for proper connection of the thermocouple to the rear of the valve. If loose, fully tighten lightly. • Check pilot for full flame impingement around thermocouple. If flame is too small, check gas pressure, adjust pilot rate screw, check pilot head for damage or blockage. • Check thermocouple voltage at rear of valve. It must be greater than 7 mV. If low, replace thermocouple.
	Air in gas line (pilot dies while knob is depressed).	• Bleed line. • Check gas line pressure. • Contact dealer.
Burners will not remain lit	Problem with thermopile circuit.	• Check gas line pressure . • Check for flame impingement on thermopile. If low, see "Pilot will not remain lit". • Check thermopile for minimum of 200mV when burner is switched on. • Check wiring to thermostat for breaks.
Flame lifting	Leak in vent pipe.	• Check for leaks in vent connections.
	Improper vent configuration.	• Check vent configuration with manual.
	Terminal may be recirculating flue gases.	• Check to see if terminal is on correctly. • May need to install high wind termination cap. • Contact dealer.
	Improperly set vent restrictor plate.	• See venting section for proper restrictor setting.
Glass fogs up	Normal Condition: after the appliance warms up the glass will clear. **Due to additives in gas, glass may get hazy during operation** Clean as needed.	
Blue Flames	Normal during start up: flames will yellow as the fireplace heats up.	
Flames are burning "dirty" or sooting	Flame impingement	• Check log positioning. • Check vent restrictor for proper setting. • Increase primary air by opening venturi shutter. • See also "Burners will not remain lit."

Parts List

30-001	Conversion Kit LP to NG (TV)
30-002	Conversion Kit NG to LP (TV)
30-005	Conversion Kit LP to NG (RV)
30-006	Conversion Kit NG to LP (RV)
30-013	Levelling Bolts
30-019	Owner's Manual
30-029	Door Knob Clip
30-033	Door Latch Assembly - Nickel
30-047	Valve Mounting Bracket
30-048	Rear Shield
30-049	Rating Plate (Label)
30-050	Gas Valve Cover
30-051	Flue Connection
30-052	Inner Door Handles (2 per set)
30-053	Venturi Adjustment Rod
30-054	Firebox
30-055	Burner
50-040	45° Elbow & Gasket
50-173	Fan Kit 180 C.F.M.
50-296	Left Rear Log - B
50-297	Left Front Log - A
50-298	Right Log - C
50-329	Electronic Ignition Module Switch
50-343	Blank Orifice #73 - All Gas Models
50-348	Wiring Harness
50-366	Pressure Relief Door With Gasket, Rod & Brackets
50-461	Control Panel Decal
50-463	Inner Door Complete (With Glass & Handles)
50-491	Embers - Post '00
50-497	4" Flex Coupler
50-512	Dual Convection Blower 115V (No Mount)
50-533	Firebox Baffle
50-555	Valve Extension Rod With Knob (1 per set)
50-589	Electronic Ignition Module
50-690	Control Panel
50-841	Drafthood Adapter
EC-001	120° Ceramic Fan Temperature Sensor (All Models)
EC-006	S.I.T. Nova Valve NG (50% Turn Down)

EC-007	S.I.T. Nova Valve LP (50% Turn Down)
EC-009	Thermocouple (Post 10/00)
EC-011	Spark Electrode with Ignitor Cable (Post 10/00)
EC-012	Thermopile
EC-015	Fully Assembled Pilot NG
EC-016	Fully Assembled Pilot LP
EC-021	Pilot Gasket
EC-023	S.I.T. Piezo Ignitor
EC-026	Burner Switch
EC-039A	Fan Controller 115V With Knob
EC-040	Fan Controller Knob
EC-044	HEYCO Strain Relief
EC-061	DV Vent Kit With Coupler
EC-069	Convection Blower 115V
EGWP-072	Log Set With Embers - Complete
EGWP-087	Relief Door Gasket Only
EGWP-089	Window Channel Tape
EGWP-090	1 Piece Glass With Tape
EGWP-092	Inner Door Only - Painted
EGWP-099	Burner Control Assembly LP
EGWP-100	Burner Control Assembly NG
EGWP-510	Door Hinge Pin - Silver
EGWP-513	Fireplace Screen
EF-124	Shoulder Bolt, Hardened Bushing & Nut (Set of 2)
30-059	Bedford Arch Door
30-065	Bedford Gothic Filigree Door
50-282	Bedford Top
50-283	Bedford Front Posts (Right & Left)
50-284	Bedford Rear Posts (Right & Left)
50-285	Bedford Ash Shelf
50-286	Bedford Side (Right & Left)
50-287	Bedford Front
50-288	Bedford Front Bottom Rail
50-289	Bedford Side Bottom Rails (Right & Left)
50-290	Bedford Aluminum Inserts (Set of 4)
50-357	Bedford Door Screen

Westport Cast Parts List

50-368	Top Only (No Grate Or Vent Insert) - Painted
50-369	Top Only (No Grate Or Vent Insert) - Diamond Black
50-370	Top Only (No Grate Or Vent Insert) - Antique White
50-371	Top Only (No Grate Or Vent Insert) - Inferno Red
50-372	Top Only (No Grate Or Vent Insert) - Pearl Grey
50-373	Top Only (No Grate Or Vent Insert) - Wedgewood Blue
50-374	Top Only (No Grate Or Vent Insert) - Westport Green
	Top Only (No Grate Or Vent Insert) - Antique Chestnut
EGWP-508	Cast Leg (Each) - Painted
50-375	Cast Leg (Each) - Antique White
50-376	Cast Leg (Each) - Diamond Black
50-377	Cast Leg (Each) - Inferno Red
50-378	Cast Leg (Each) - Pearl Grey
50-379	Cast Leg (Each) - Wedgewood Blue
50-380	Cast Leg (Each) - Westport Green
50-875	Cast Leg (Each) - Antique Chestnut
50-562	Complete Cast Body - Painted
50-563	Complete Cast Body - Antique White
50-564	Complete Cast Body - Diamond Black
50-565	Complete Cast Body - Inferno Red
50-566	Complete Cast Body - Pearl Grey
50-567	Complete Cast Body - Wedgewood Blue
50-568	Complete Cast Body - Westport Green
50-876	Complete Cast Body - Antique Chestnut
EGWP-501	Top Complete (Top, Vent Insert, & Grate) - Painted
EGWP-501AW	Top Complete (Top, Vent Insert, & Grate) - Antique White
EGWP-501DB	Top Complete (Top, Vent Insert, & Grate) - Diamond Black
EGWP-501IR	Top Complete (Top, Vent Insert, & Grate) - Inferno Red
EGWP-501PG	Top Complete (Top, Vent Insert, & Grate) - Pearl Grey
EGWP-501WB	Top Complete (Top, Vent Insert, & Grate) - Wedgewood Blue
EGWP-501WG	Top Complete (Top, Vent Insert, & Grate) - Westport Green
50-868	Top Complete (Top, Vent Insert, & Grate) - Antique Chestnut
EGWP-502	Top Grate - Painted
EGWP-502AW	Top Grate - Antique White
EGWP-502DB	Top Grate - Diamond Black
EGWP-502IR	Top Grate - Inferno Red
EGWP-502PG	Top Grate - Pearl Grey
EGWP-502WB	Top Grate - Wedgewood Blue
EGWP-502WG	Top Grate - Westport Green
50-869	Top Grate - Antique Chestnut
EGWP-503	Top Vent Insert Piece - Painted
EGWP-503AW	Top Vent Insert Piece - Antique White
EGWP-503DB	Top Vent Insert Piece - Diamond Black
EGWP-503IR	Top Vent Insert Piece - Inferno Red
EGWP-503PG	Top Vent Insert Piece - Pearl Grey
EGWP-503WB	Top Vent Insert Piece - Wedgewood Blue
EGWP-503WG	Top Vent Insert Piece - Westport Green
50-870	Top Vent Insert Piece - Antique Chestnut
EGWP-504	Side Panel (Left) - Painted
EGWP-504AW	Side Panel (Left) - Antique White
EGWP-504DB	Side Panel (Left) - Diamond Black
EGWP-504IR	Side Panel (Left) - Inferno Red
EGWP-504PG	Side Panel (Left) - Pearl Grey
EGWP-504WB	Side Panel (Left) - Wedgewood Blue
EGWP-504WG	Side Panel (Left) - Westport Green
50-871	Side Panel (Left) - Antique Chestnut
EGWP-505	Side Panel (Right) - Painted
EGWP-505AW	Side Panel (Right) - Antique White
EGWP-505DB	Side Panel (Right) - Diamond Black
EGWP-505IR	Side Panel (Right) - Inferno Red
EGWP-505PG	Side Panel (Right) - Pearl Grey
EGWP-505WB	Side Panel (Right) - Wedgewood Blue
EGWP-505WG	Side Panel (Right) - Westport Green
50-872	Side Panel (Right) - Antique Chestnut
EGWP-506	Cast Front Complete (Doors & Ash Shelf) - Painted
EGWP-506AW	Cast Front Complete (Doors & Ash Shelf) - Antique White
EGWP-506DB	Cast Front Complete (Doors & Ash Shelf) - Diamond Black
EGWP-506IR	Cast Front Complete (Doors & Ash Shelf) - Inferno Red
EGWP-506PG	Cast Front Complete (Doors & Ash Shelf) - Pearl Grey
EGWP-506WB	Cast Front Complete (Doors & Ash Shelf) - Wedgewood Blue
EGWP-506WG	Cast Front Complete (Doors & Ash Shelf) - Westport Green
50-873	Cast Front Complete (Doors & Ash Shelf) - Antique Chestnut
EGWP-507	Ash Shelf - Painted
EGWP-507AW	Ash Shelf - Antique White
EGWP-507DB	Ash Shelf - Diamond Black
EGWP-507IR	Ash Shelf - Inferno Red
EGWP-507PG	Ash Shelf - Pearl Grey
EGWP-507WB	Ash Shelf - Wedgewood Blue
EGWP-507WG	Ash Shelf - Westport Green
50-874	Ash Shelf - Antique Chestnut

Parts Diagram - Body

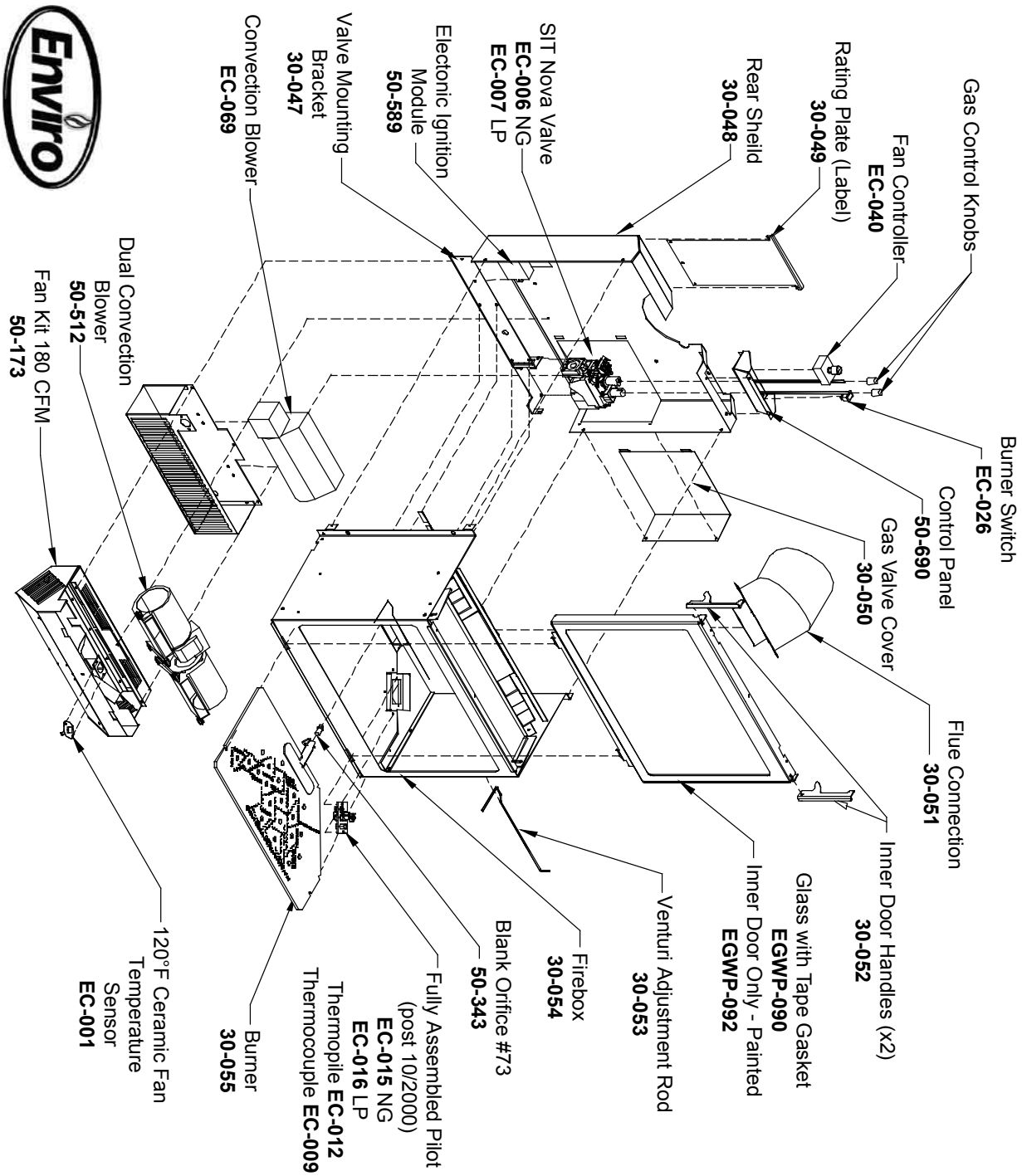

Westport / Bedford Body
December 2003

Parts Diagram - Bedford

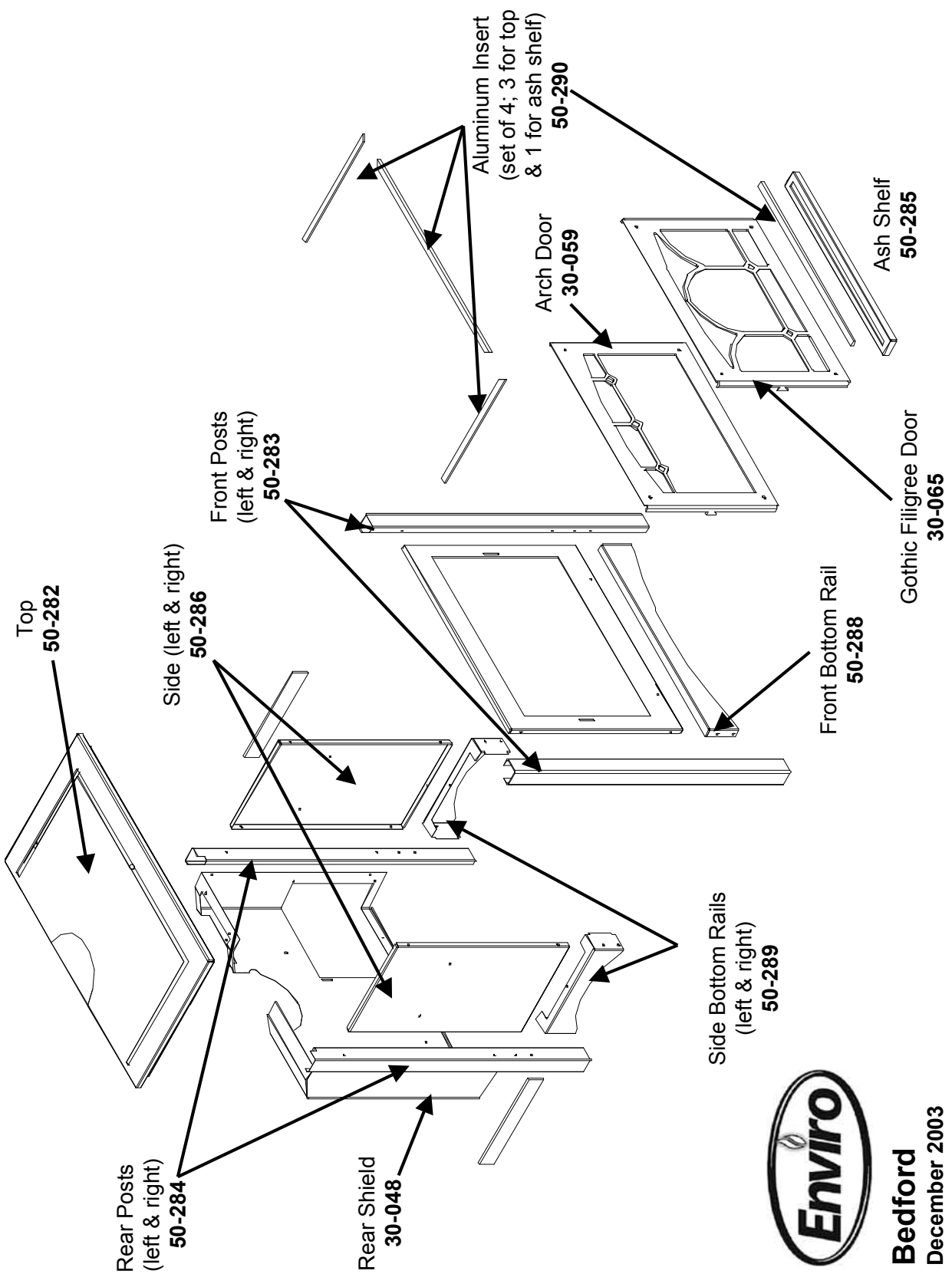

Warranty

Sherwood Industries Ltd. offers a Limited Lifetime Warranty on this gas product. This limited lifetime warranty covers the appliance for a period of seven years from the date of installation. This warranty applies only to the original owner in the original location

Covered under the lifetime warranty are, Surround Panels and Chassis and Heat Exchanger. These steel components are covered against manufacturer's defects for 7 years and labor for the first year. (A) The following exclusions apply:- over-firing due to incorrect setup or tampering, damage caused by incorrect installation, usage or abuse. The unit must be properly installed by a qualified technician or installer, and must meet all local and national gas and building code requirements.

We also cover against manufacture defects under our Limited Lifetime warranty for the following components: Gold Plating, Log Set, Burners and Glass
The following exclusions apply:
Porcelain finishes- Damage caused by chipping, scratching, marring, chemicals, fingerprints, abrasive cleaners or discoloration with age.
Glass- use of harsh or abrasive cleaners, striking the glass or surface contaminates. Log set- Damage caused by incorrect handling or misuse.
Burners- damage caused by improper or continuous operation under incorrect conditions.

Sherwood Industries Ltd. offers a 2-year warranty on all the Electrical Components and Gas Components against manufacturing defects. Paint is covered against flaking. This offer includes parts and labor for 1 year and for parts only thereafter.

Your dealer shall make all claims under this warranty in writing.

WHEN FILING A WARRANTY CLAIM PLEASE COMPLETE THE FOLLOWING INFORMATION ON AN OFFICIAL WARRANTY CLAIM FORM:

TO THE DEALER

Name, address and telephone number of purchaser and date of purchase.

Date of installation. Name of installer and dealer. Serial number of the appliance. Nature of complaint, defects or malfunction, description and part # of any parts replaced.

TO THE DISTRIBUTOR

Sign and verify that work and information are correct.

This warranty covers defects in materials and workmanship only if the product has been installed according to the manual's instructions. If the product is damaged or broken as a result of misuse or mishandling the warranty does not apply. The warranty does not cover removal and re-installation costs.

Sherwood Industries Ltd. reserves the right to repair or to replace the defective product. The shipping costs are to be paid by the consumer. All warranties by the manufacture are set forth herein and no claim shall be made against the manufacturer on any oral warranty or representation.

Sherwood Industries Ltd. and its employees or representatives will not assume any damages, either directly or indirectly caused by improper usage, operation, installation, servicing or maintenance of this appliance.

Sherwood Industries Ltd. reserves the right to make changes without notice. Please complete and mail the warranty registration card and have the installer fill in the installation data sheet in the back of the manual for warranty and future reference.

Installation Data Sheet

The following information must be recorded by the installer for warranty purposes and future reference.

NAME OF OWNER:

_____

ADDRESS:

_____

_____

_____

PHONE:_____

NAME OF DEALER:

_____

ADDRESS:

_____

_____

_____

PHONE:_____

MODEL:_____

SERIAL NUMBER:_____

DATE OF PURCHASE: _____ (dd/mm/yyyy)

DATE OF INSTALLATION:_____(dd/mm/yyyy)

☐ NATURAL GAS (NAT) ☐ PROPANE(LPG)

INLET GAS PRESSURE:_____in wc

MAIN BURNER ORIFICE:_____# DMS

PILOT ORIFICE #_____OR_____in diam.

INSTALLER'S SIGNATURE:

_____

NAME OF INSTALLER:

_____

ADDRESS:

_____

_____

_____

PHONE:_____

MANUFACTURED BY:
SHERWOOD INDUSTRIES LTD.
6782 OLDFIELD RD. SAANICHTON, BC, CANADA V8M 2A3
www.envirofire.biz
December 8, 2003
C-10168