SHERWOOD INDUSTRIES IS AN ENVIRONMENTALLY RESPONSIBLE COMPANY. THIS MANUAL IS PRINTED ON RECYCLED PAPER.

PLEASE KEEP THESE INSTRUCTIONS FOR FUTURE REFERENCE

Enviro

PELLET STOVE

Evolution

TECHNICAL MANUAL

CE 2003



Sherwood Industries Ltd.
Saanichton, Canada

DIN 18 891
P–BWU 10/00017

Fraunhofer Institut bauphysik

PLEASE READ THIS ENTIRE MANUAL BEFORE INSTALLATION AND USE OF THIS PELLET BURNING ROOM HEATER. FAILURE TO FOLLOW THESE INSTRUCTIONS COULD RESULT IN PROPERTY DAMAGE, BODILY INJURY OR EVEN DEATH

Contact your building or fire officials about restrictions and installation inspection requirements in your area.

50-905

Table of Contents

Table of Contents....2
Introduction....3
- Rating Label Location....3
- Important Safety Data....3
- Safety Warnings And Recommendations....3

Operating Instructions....5
- Thermostat Installed....5
- Optional Slider/Damper Installation....6
- Slider/Damper Set-up....7

Installation....8
- Deciding Where to Locate your Pellet Appliance....8
- Removing Your New Stove From the Pallet....8
- Hearth Pad Pedestal Installation....9
- Vent Termination Requirements....10
- Clearances to Combustibles....11
- Alcove Clearances....11
- Exhaust and Fresh Air Intake Dimensions....12
- Horizontal Through Wall Installation....13
- Straight Through Wall Installation....14
- Through Wall With Vertical Rise....14
- Vertical Installation....15
- Hearth Mount Installation....16
- Through Concrete Wall With Vertical Rise Installations....16
- Exterior Mounted Exhaust Blower....17
- Typical Through Wall Termination Installation....18
- Through Wall Vertical Installation....19

Troubleshooting....20
Wiring Diagram....23
Parts Diagram - Components....24
Parts Diagram - Steel....25
Warranty....26
Installation Data Sheet....27

Introduction

Rating Label Location:

The rating label is located on the inside of the ash pan cover.

Important Safety Data:

TO PREVENT THE POSSIBILITY OF A FIRE, THIS APPLIANCE MUST BE PROPERLY INSTALLED BY FOLLOWING THE INSTALLATION INSTRUCTIONS. PLEASE READ THIS ENTIRE OWNER'S MANUAL BEFORE INSTALLING OR OPERATING YOUR ENVIRO PELLET STOVE. FAILURE TO FOLLOW THESE INSTRUCTIONS MAY RESULT IN PROPERTY DAMAGE, BODILY INJURY OR EVEN DEATH. CONTACT YOUR LOCAL BUILDING OR FIRE OFFICIALS TO OBTAIN A PERMIT AND ANY INFORMATION ON ANY INSTALLATION RESTRICTIONS AND INSPECTION REQUIREMENTS FOR YOUR AREA. An ENVIRO dealer will be happy to assist you.

THE STOVE'S EXHAUST SYSTEM WORKS WITH NEGATIVE COMBUSTION CHAMBER PRESSURE AND A SLIGHTLY POSITIVE CHIMNEY PRESSURE.

IT IS VERY IMPORTANT TO ENSURE THAT THE EXHAUST SYSTEM BE SEALED AND IS AIRTIGHT.

Safety Warnings And Recommendations:

Fuel: This pellet stove is designed and approved to only burn wood pellet fuel with up to 3% ash content. Dirty fuel will adversely affect the operation and performance of the unit and may void the warranty. Check with your dealer for fuel recommendations.

THE USE OF CORDWOOD IS PROHIBITED BY LAW.

Soot: Operation of the stove with insufficient combustion air will result in the formation of soot which will collect on the glass, the heat exchanger, the exhaust vent system and may stain the outside of the house. This is a dangerous situation and is inefficient. Frequently check your stove and adjust the slider/damper as needed to ensure proper combustion. **See: "Operation - Slider/Damper"**

Cleaning: There will be some build up of fly ash and small amounts of creosote in the exhaust. This will vary due to the ash content of the fuel used and the operation of the stove. It is advisable to inspect and clean the exhaust vent annually or every two tons of pellets.

Ashes: Disposed ashes should be placed in a metal container with a tight fitting lid. The closed container of ashes should be on a non-combustible floor on the ground, well away from all combustible materials pending final disposal. If the ashes are disposed of by burial in soil or otherwise locally dispensed, they should be retained in the closed container until all cinders have been thoroughly cooled.

Electrical: THE USE OF A SURGE PROTECTED POWER BAR IS RECOMMENDED.
The maximum power requirement is 700 watts (3.1 amp). The stove has a grounded electrical cord and should be connected to a standard 240 volt, 50-Hz grounded electrical outlet. Make sure the electrical cord is not trapped under the appliance and that it is clear of any hot surfaces or sharp edges. When installing the stove in a mobile home, it must be electrically grounded to the steel chassis of the home and bolted to the floor in accordance with applicable local, state or federal codes.

Introduction

Glass: Do not abuse the glass by striking or slamming the door. Do not attempt to operate the stove with broken glass. The stove uses ceramic glass. Replacement glass must be purchased from an ENVIRO dealer. Do not attempt to open the door and clean the glass while the unit is in operation or if glass is hot.

Flammable Liquids: Never use gasoline, gasoline-type lantern fuel, kerosene, charcoal lighter fluid, or similar liquids to start or "freshen up" a fire in the heater. Keep all such liquids well away from the heater while it is in use.

Smoke Detector: Smoke detectors should be installed and maintained in the structure when installing and operating a pellet burning appliance.

Operation: The ash pan and door must be closed securely for proper and safe operation of the pellet stove. Also ensure all gaskets on the door are checked and replaced when necessary.

KEEP ASH PAN FREE OF RAW FUEL.

DO NOT PLACE UNBURNED OR NEW PELLET FUEL IN ASH PAN. A fire in the ash pan may occur.

Installation: Be sure to maintain the structural integrity of your home when passing a vent through walls, ceilings, or roofs.

DO NOT INSTALL A FLUE DAMPER IN THE EXHAUST VENTING SYSTEM OF THIS UNIT.

DO NOT CONNECT THIS UNIT TO A CHIMNEY FLUE SERVING ANOTHER APPLIANCE.

Fresh air: Must be connected to all units installed in Mobile Homes as well as "Air Tight Homes" (R2000). Fresh air intake is recommended on all installations. Failure to install intake air may result in poor performance, smoke, property damage, house fire, bodily injury or death under certain conditions.

If you have any questions with regards to your stove or the above-mentioned information, please feel free to contact your local dealer for further clarification and comments.

SINCE SHERWOOD INDUSTRIES LTD. HAS NO CONTROL OVER THE INSTALLATION OF YOUR STOVE, SHERWOOD INDUSTRIES LTD. GRANTS NO WARRANTY IMPLIED OR STATED FOR THE INSTALLATION OR MAINTENANCE OF YOUR STOVE. THEREFORE, SHERWOOD INDUSTRIES LTD. ASSUMES NO RESPONSIBILITY FOR ANY CONSEQUENTIAL DAMAGE(S).

SAVE THIS INSTRUCTION MANUAL FOR FUTURE REFERENCE

Operating Instructions

Thermostat Installed :

This control board can be placed into two different modes: when the jumper J2 is not jumped (factory setting) then the control board is in a HI / LOW mode operation. If the control board is placed with J2 jumped then the control board is in a ON / OFF mode of operation.

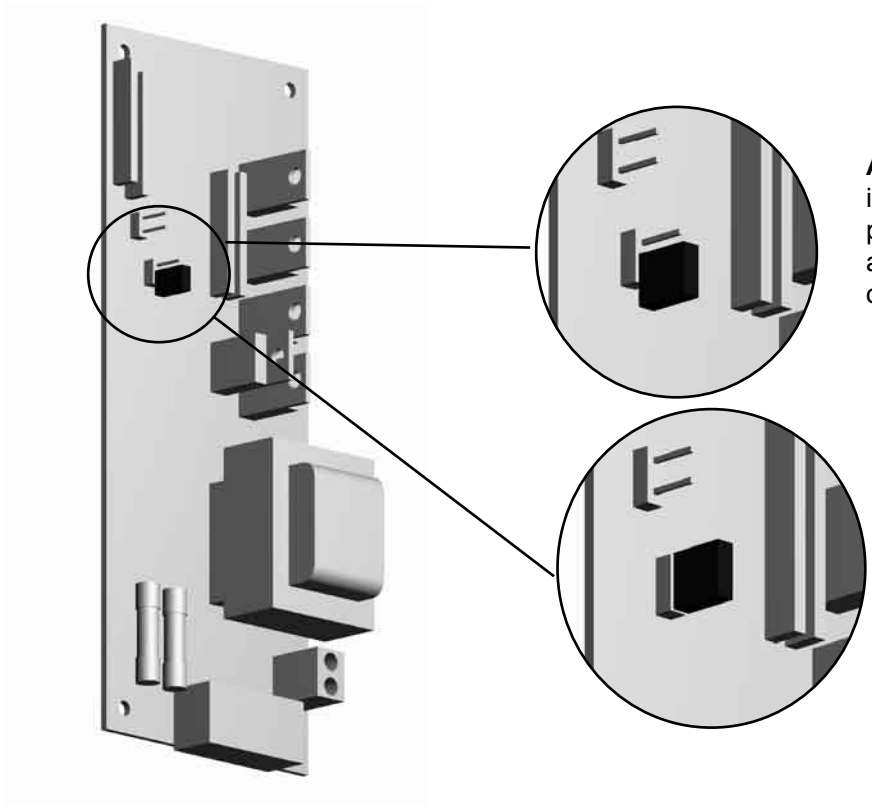

A) HI / LOW: when the jumper is placed on only one of the J9 pins, then the control board is in a HI / LOW mode of thermostat operation(factory setting).

B) ON / OFF: If both pins of J9 are jumped (covered) then the control board is in an ON / OFF mode of thermostat operation.

1. Install the thermostat in a location that is not to close to the unit but will effectively heat the desired area.

2. Install a 12 or 24 Volt Thermostat using an 18 x 2 gauge wire from the unit to the thermostat.

3. If the unit has been placed in the HI / LOW mode. The unit will be taken to a low or idle setting when the thermostat is not calling for heat. When the thermostat calls for heat, the unit will go to the setting that is displayed on the control board Heat Indicator.

4. If the unit has been placed in the ON /OFF thermostat mode, the unit will shut OFF when the thermostat is not calling for heat. When the thermostat calls for heat the unit will go through an ignition sequence once again and relight.

Operating Instructions

Optional Slider/Damper Installation:

NOTE: NOT FOR USE IN GERMANY

If you wish to adjust the slider damper externally (NOT REQUIRED), please follow the instructions below.

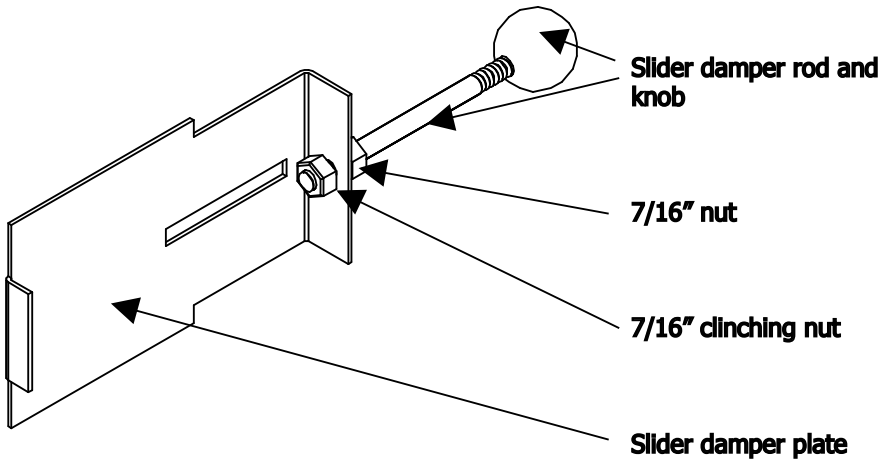

1. To install the OPTIONAL slider damper rod, remove the left cabinet side and locate the slider damper plate. Install the 7/16 inch nut unto the slider damper rod, thread all the way to the end of the threads on rod.

2. Slide rod through the hole in the slider damper plate and install the 7/16" clinching nut onto the rod and tighten completely onto the slider damper plate.

3. Reinstall the cabinet side. Install the black knob on the end of the rod. Check slider damper for smooth operation.

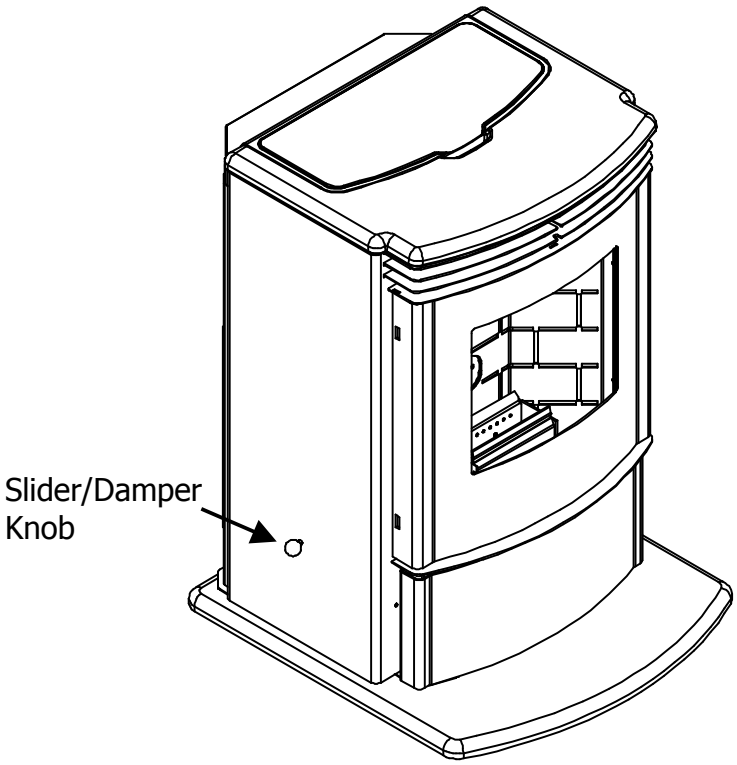

Operating Instructions

Slider/Damper Set-up:

This is used to regulate the airflow through the pellet stove.

The slider damper is located behind the left side panel. To open the left side panel, undo the one screw located in the upper front corner of the cabinet side between the louvers. Also loosen three screws down the back of the side panel.

The slider Damper has been factory set for German test pellet fuel.

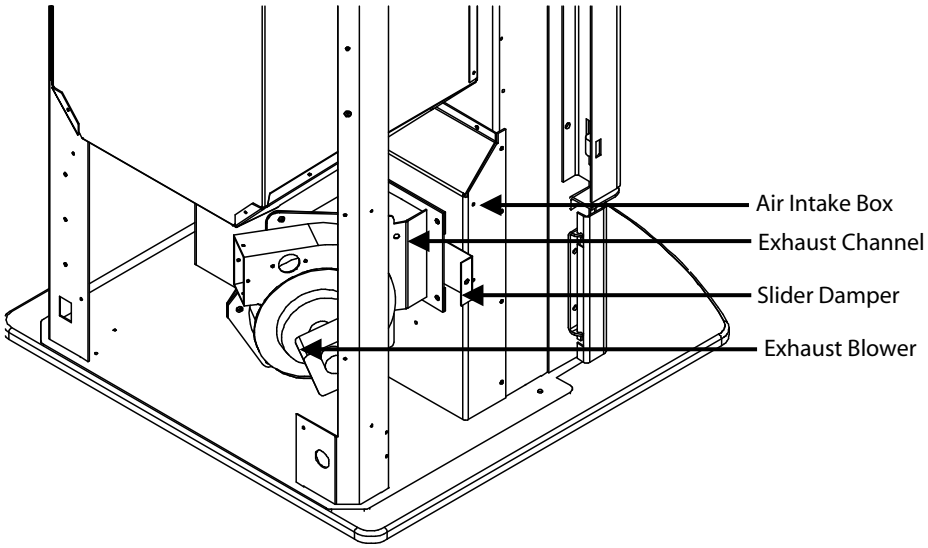

The combustion exhaust blower is a variable speed blower controlled by the heat output button. This blower will decrease the vacuum pressure inside the stove and as the heat output button is turned down. The vacuum pressure inside the firebox will increase as the combustion exhaust blower increases in speed (higher heat output setting).

If the fire should happen to go out and the heat output indicator has been set on the lowest setting, the Slider Damper should be pushed in slightly, decreasing the air in the firebox.

If, after long periods of burning, the fire builds up and over flows the burn pot or there is a build up of clinkers, this would be a sign that the pellet quality is poor and the slider damper must be pulled out to compensate, letting more air in the firebox.

Pulling the slider damper out gives the fire more air.

The easiest way to make sure that an efficient flame is achieved is to see the characteristics of the fire.

- A tall and lazy flame with dark orange tips requires more air – Open slider / damper up.
- A short and brisk flame, like a blowtorch, has too much air – Close slider / damper down.
- If the flame is in the middle of these two characteristics with a bright yellow/orange, active flame then the air is set for proper operation.

SPECIAL NOTES:

Pellet quality is a major factor in how the Pellet stove will operate. If the Pellets have a high moisture content or ash content the fire will be less efficient and has a higher possibility of the fire building up and creating clinkers (hard ash build-up).

Installation

Deciding Where to Locate your Pellet Appliance:

1. Check clearances to combustibles.

2. Do not obtain combustion air from an attic, garage or any unventilated space. Combustion air may be obtained from a ventilated crawlspace.

3. Do not install the stove in a bedroom.

4. You can vent the stove through an exterior wall behind the unit or connect it to an existing masonry or metal chimney (must be lined if the chimney is over 6" in diameter, or over 28 sq. inches cross sectional area). An interior vent can be used with approved pipe passing through the ceiling and roof.

5. Locate the stove in a large and open room that is centrally located in the house. This will optimize heat circulation.

6. The power cord is 8 feet (2.43 m) long and may require a grounded extension cord to reach the nearest electrical outlet.

Removing Your New Stove From the Pallet:

To remove your new stove from its pallet, open the left and right side panels. There are two wood screws that are holding the bottom of the stove to the pallet. Remove the screws. Close the side panels.

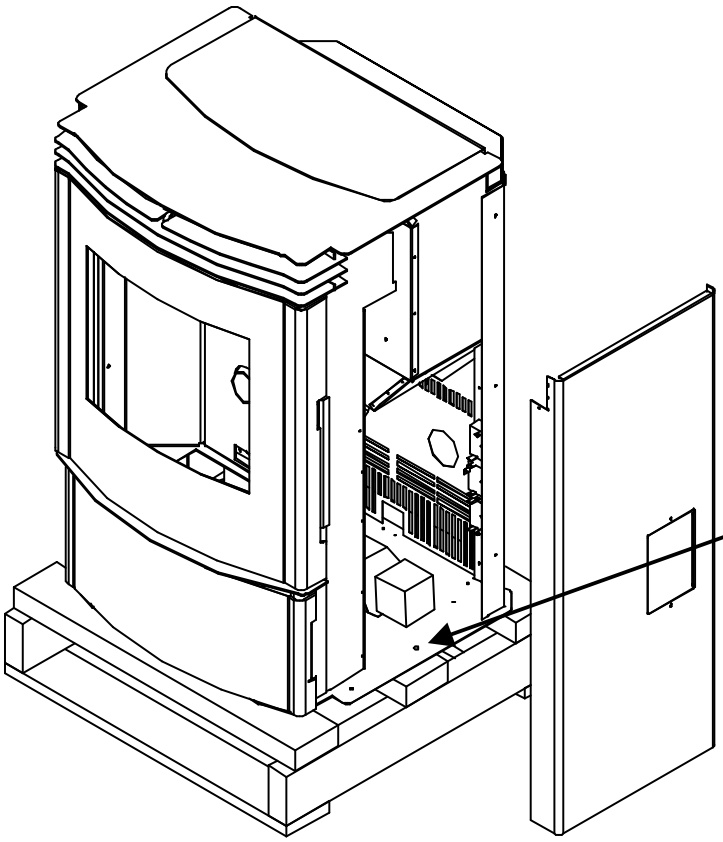

To remove the right and left hand cabinet sides there are three T-20 Torx screws on the back of the panel; loosen these screws only.

Remove the one screw located on the front of the cabinet side, behind the top louvers.

Remove the two wood screws (one on either side of the unit) to remove the unit from the pallet.

Installation

Hearth Pad Pedestal Installation:

Carefully place the back of the pellet appliance on the pallet and install the hearth pad. Align the holes in the hearth pad and the unit and install the four screws provided.

Place the unit on its back and install the hearth pad using the four screws provided

This unit can be installed on a combustible floor due to the built in pedestal hearth pad (for example linoleum, hardwood flooring). If this unit is to be installed onto a carpeted surface, a hearth pad must be used for stability.

This unit is supplied with 4 leveling legs for uneven surfaces. Adjust these leveling legs until unit is level.

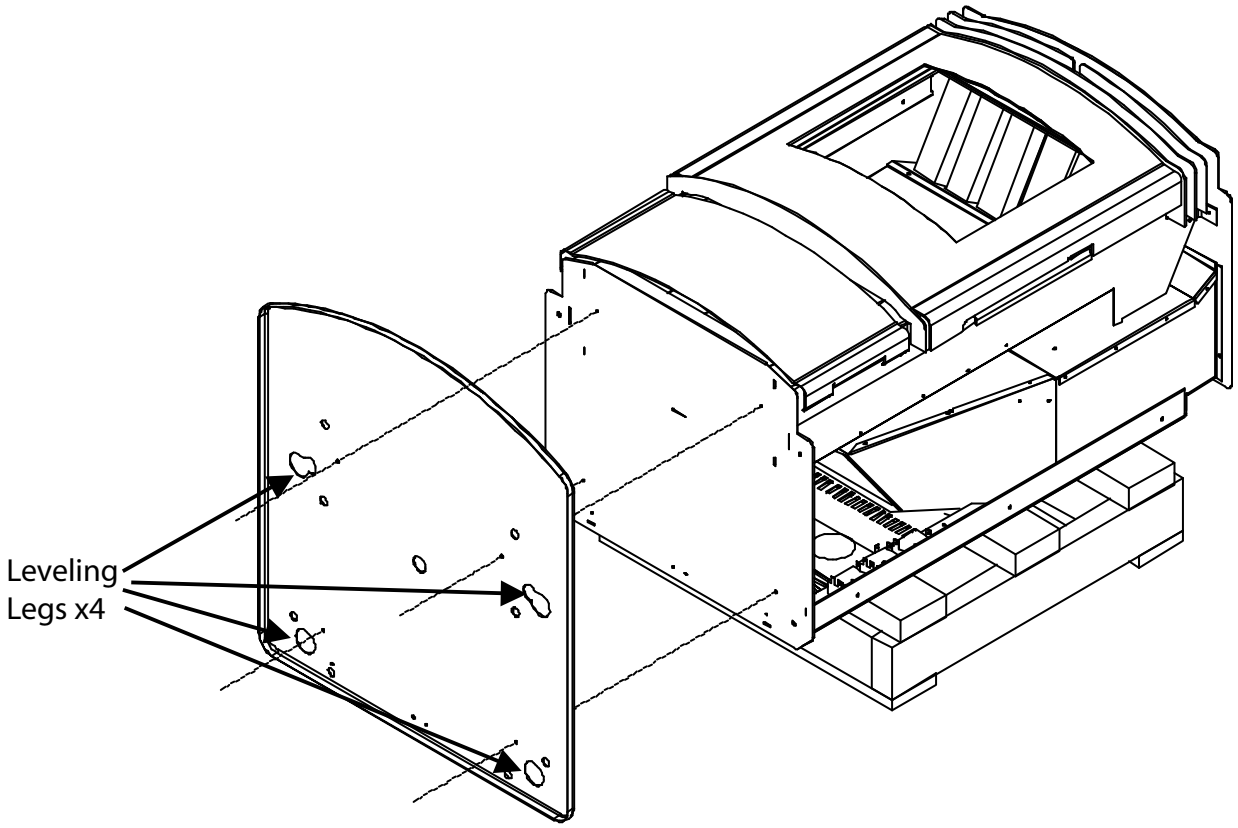

Vent Termination Requirements:

1. Do not terminate the vent in any enclosed or semi-enclosed areas such as a carport, garage, attic, crawlspace, narrow walkway, closely fenced area, under a sundeck or porch, or any location that can build up a concentration of fumes such as stairwells, covered breezeway, etc.

2. Vent surfaces can become hot enough to cause burns if touched by children. Non-combustible shielding or guards may be required.

3. Termination must exhaust above the inlet elevation. It is recommended that at least five feet of vertical pipe be installed outside when the appliance is vented directly through a wall, to create some natural draft to prevent the possibility of smoke or odor during appliance shut down or power failure. This will keep exhaust from causing a nuisance or hazard from exposing people or shrubs to high temperatures. In any case, the safest and preferred venting method is to extend the vent through the roof vertically.

4. Vent terminal cannot be:
- less than 4 feet (1.2 m) below
- less than 4 feet (1.2 m) horizontally from, and
- less than 1 foot (305 mm) above doors, window openings, or gravity/ventilation air inlet into building

5. Distance from bottom termination and grade –12" (305 mm) minimum. This is conditional upon the plants and nature of grade surface. The exhaust gases are hot enough to ignite grass, plants and shrubs located in the vicinity of termination. The grade surface must not be lawn. Distance from bottom of termination and public walkways is 7 feet (2.1 m) minimum.

6. Distance to combustible materials is 2 feet (610 mm). This includes adjacent buildings, fences, protruding parts of the structure, roof overhang, plants, shrubs, etc.

7. If the unit is incorrectly vented or the air to fuel mixture is out of balance, a slight discoloration of the exterior of the house might occur. Since these factors are beyond Sherwood Industries Ltd's. control, we grant no guarantee against such incidents.

IT IS RECOMMENDED THAT AN AUTHORIZED DEALER/INSTALLER INSTALL YOUR PELLET STOVE

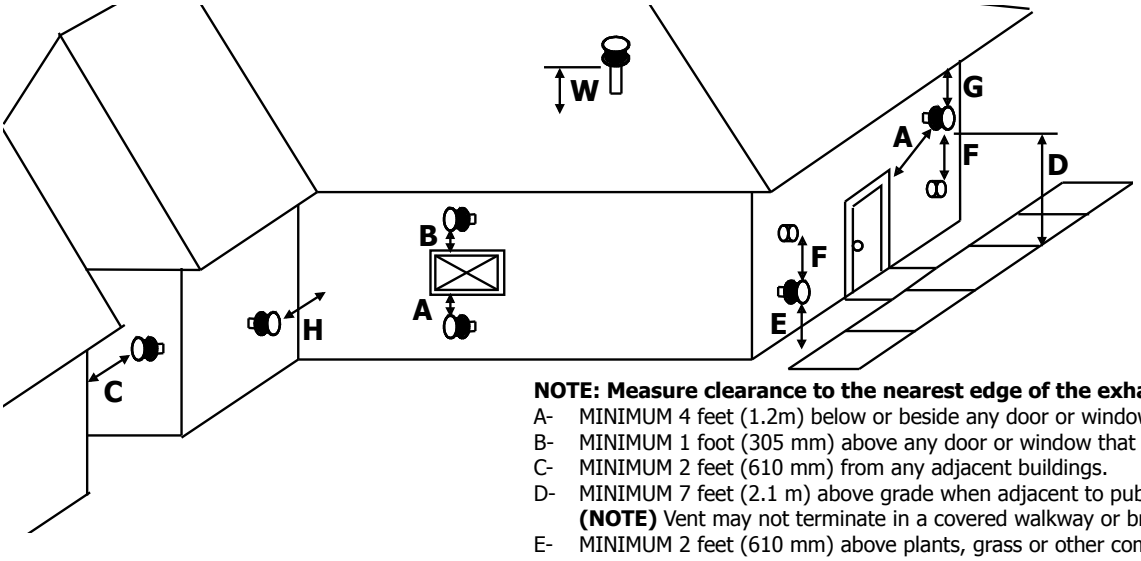

NOTE: Measure clearance to the nearest edge of the exhaust hood

A- MINIMUM 4 feet (1.2m) below or beside any door or window that opens.
B- MINIMUM 1 foot (305 mm) above any door or window that opens.
C- MINIMUM 2 feet (610 mm) from any adjacent buildings.
D- MINIMUM 7 feet (2.1 m) above grade when adjacent to public walkways.
(NOTE) Vent may not terminate in a covered walkway or breezeway.
E- MINIMUM 2 feet (610 mm) above plants, grass or other combustible materials.
F- MINIMUM 3 feet (915 mm) from any forced air intake of other appliances.
G- MINIMUM 2 feet (610 mm) below any eave or roof overhangs.
H- MINIMUM 1 foot (305 mm) clearance to a combustible wall.
W- MINIMUM 2 feet (610 mm) above the roof.

Installation

Clearances to Combustibles:

This unit can be installed on a combustible floor due to the built in pedestal hearth pad (for example linoleum, hardwood flooring). If this unit is to be installed onto a carpeted surface, a hearth pad must be used for stability.

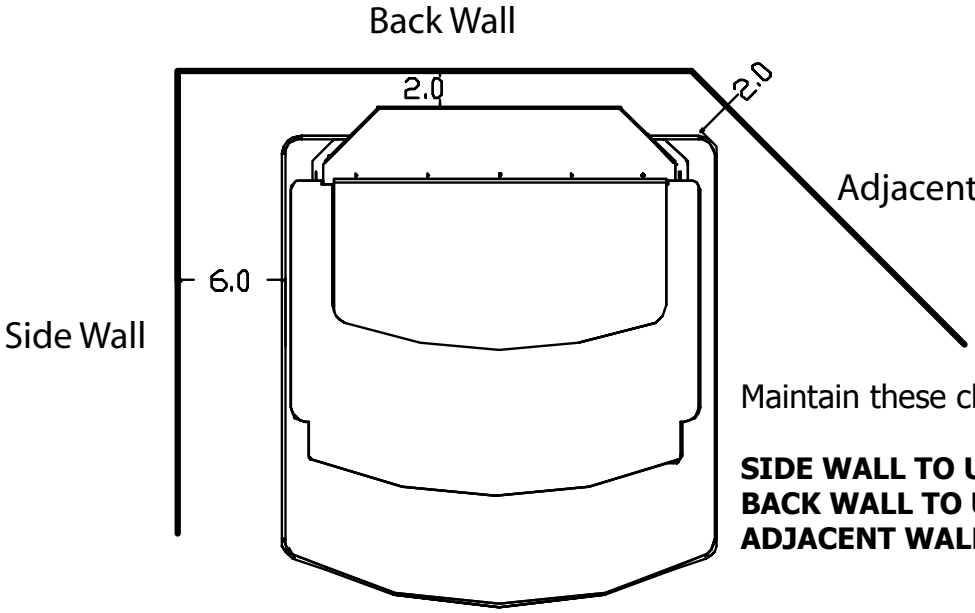

Maintain these clearances to combustibles.

SIDE WALL TO UNIT 6 INCHES (153 MM)
BACK WALL TO UNIT 2 INCHES (50 MM)
ADJACENT WALL 2 INCHES (50 MM)

Alcove Clearances:

This unit may be installed in an alcove. Maintain these clearances to combustibles.

MIN. ALCOVE WIDTH 36 INCHES (900 MM)
MIN. ALCOVE HEIGHT 48 INCHES (1200 MM)
MIN. ALCOVE DEPTH 48 INCHES (1200 MM)

Install vent at clearances specified by the vent manufacturer.

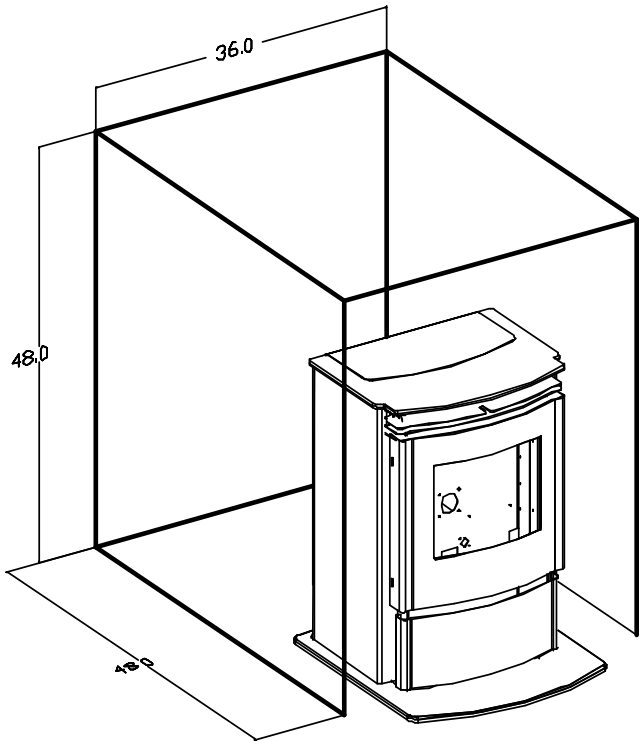

Exhaust and Fresh Air Intake Dimensions:

(A) EXHAUST.

Base to center of flue 10.71 inches (27.20 CM)
Side to center of flue 10.62 inches (26.97 CM)

(B) FRESH AIR INTAKE.

Base to center of intake 8.47 inches (21.51 CM)
Side to center of intake 7.97 inches (20.54 CM)

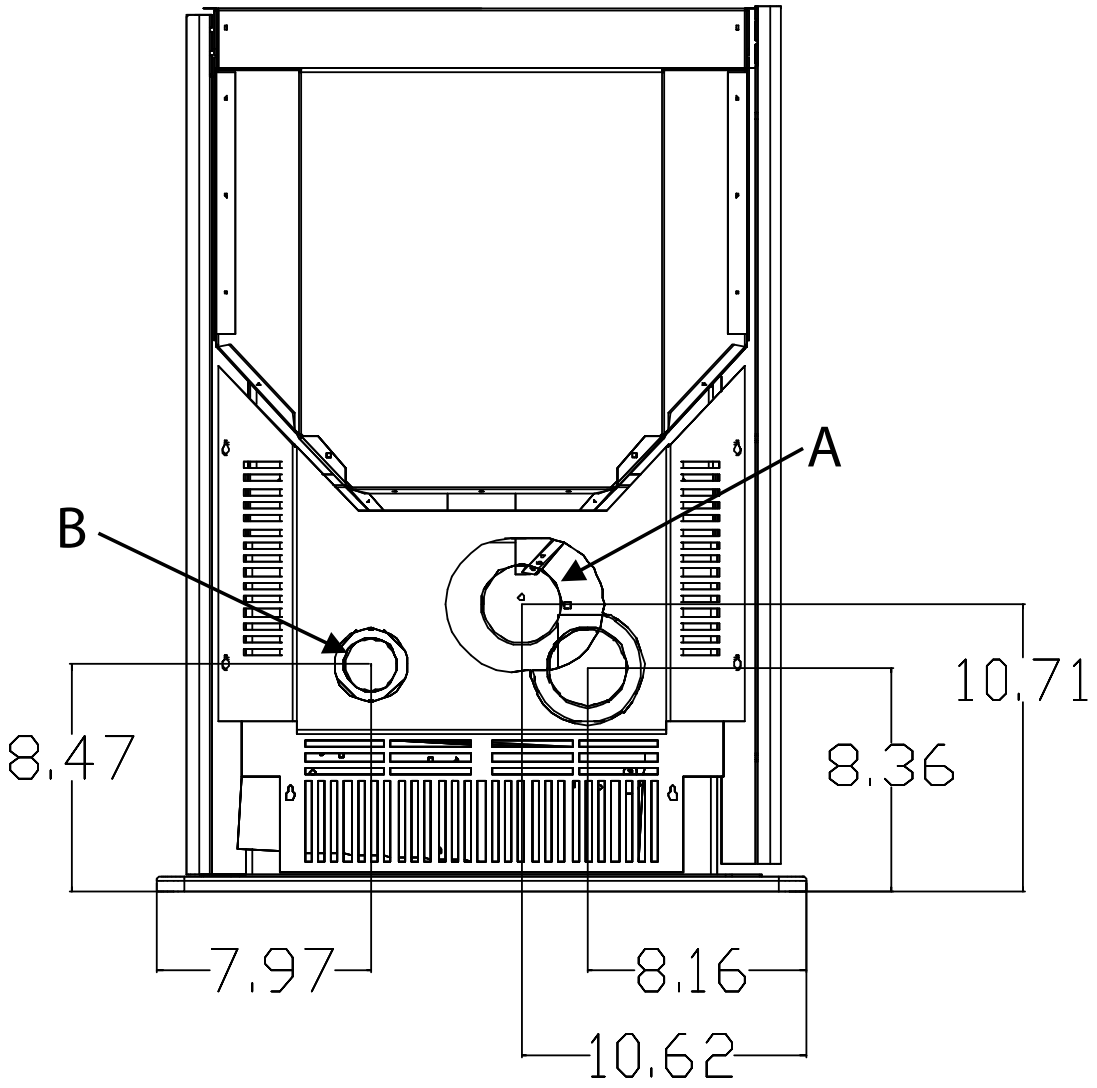

Installation

Horizontal Through Wall Installation:

The **ENVIRO Evolution (EF5)** can be vented through the wall using two different methods.

STRAIGHT THROUGH THE WALL.

1. Choose a location for your stove that meets the requirements stated in this manual and allows installation with the least amount of interference to house framing, plumbing, wiring, etc.

2. Place the appliance 15" (37.5 cm) away from the wall. If the stove is to be set on a hearth pad, set the unit on it.

3. Locate the center of the exhaust pipe on the stove. Extend that line to the wall. Once you have located the center point on the wall, use a hole saw to cut a 10" (254 mm) diameter hole for a 3" (76 mm) vent pipe or an 11" (279 mm) hole for a 4" (101 mm) vent pipe.

4. Install the wall thimble as per the instructions written on the thimble.

5. Install a length of 3" (76 mm) or 4" (101 mm) vent pipe into the wall thimble. The pipe should install easily into the thimble.

6. Install the fresh air intake.

7. Connect the exhaust vent pipe to the exhaust pipe on the stove. Seal all connections with high temperature silicone.

8. Push the stove straight back, leaving a minimum of 2" (5 cm) clearance from the back of the stove to the wall. Seal the vent pipe to the thimble with high temperature silicone.

9. The pipe must extend at least 12"(30 cm) away from the building. If necessary, bring another length of pipe (PL type) to the outside of the home to connect to the first section. Do not forget to place high temperature silicone around the pipe that passes through the thimble.

10. Install a vertical pipe, or if all requirements for direct venting are met, install vent termination. The stainless steel cap termination manufactured by the vent manufacturer is recommended. However, when the vent terminates several feet above ground level and there are no trees, plants, etc. within several feet, a 45-degree elbow with rodent screen can be used as a termination. The elbow must be turned down to prevent rain from entering.

NOTE:

Some horizontal-through-wall installations may require a "T" and a 3 to 5 foot of vertical pipe outside the building to help natural draft in the unit.

This may be required if a proper burn cannot be maintained, after the stove has been tested and the airflow set.

This is due to the backpressure in the exhaust caused by airflow around the structure.

Straight Through Wall Installation:

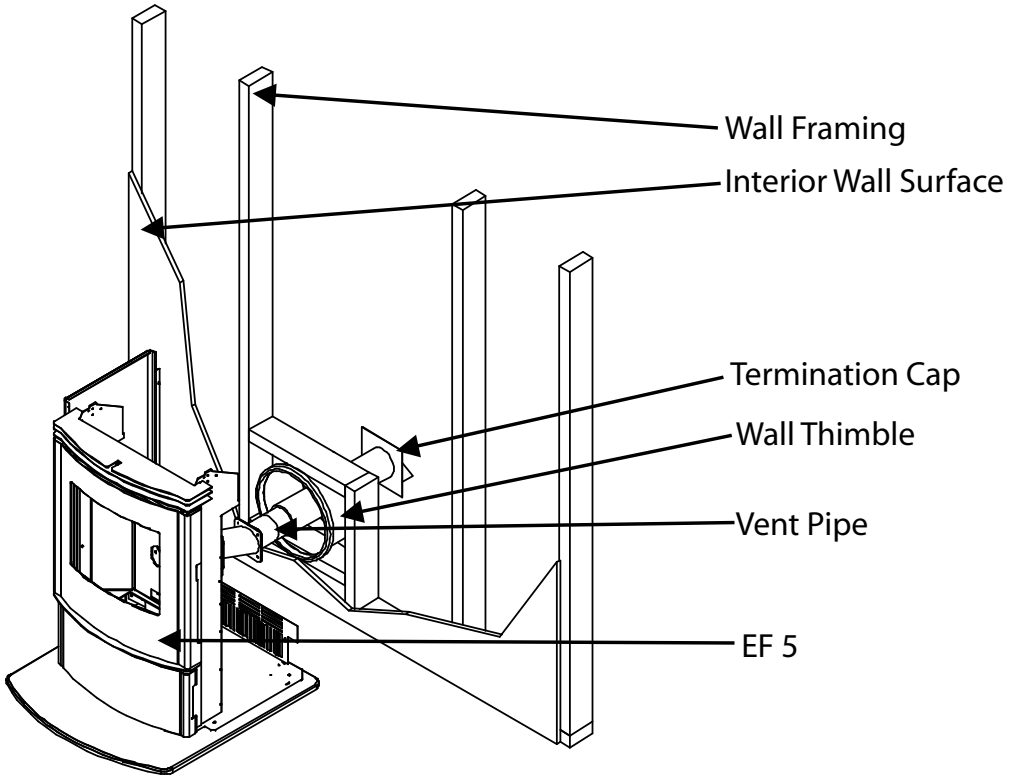

Through Wall With Vertical Rise (Recommended):

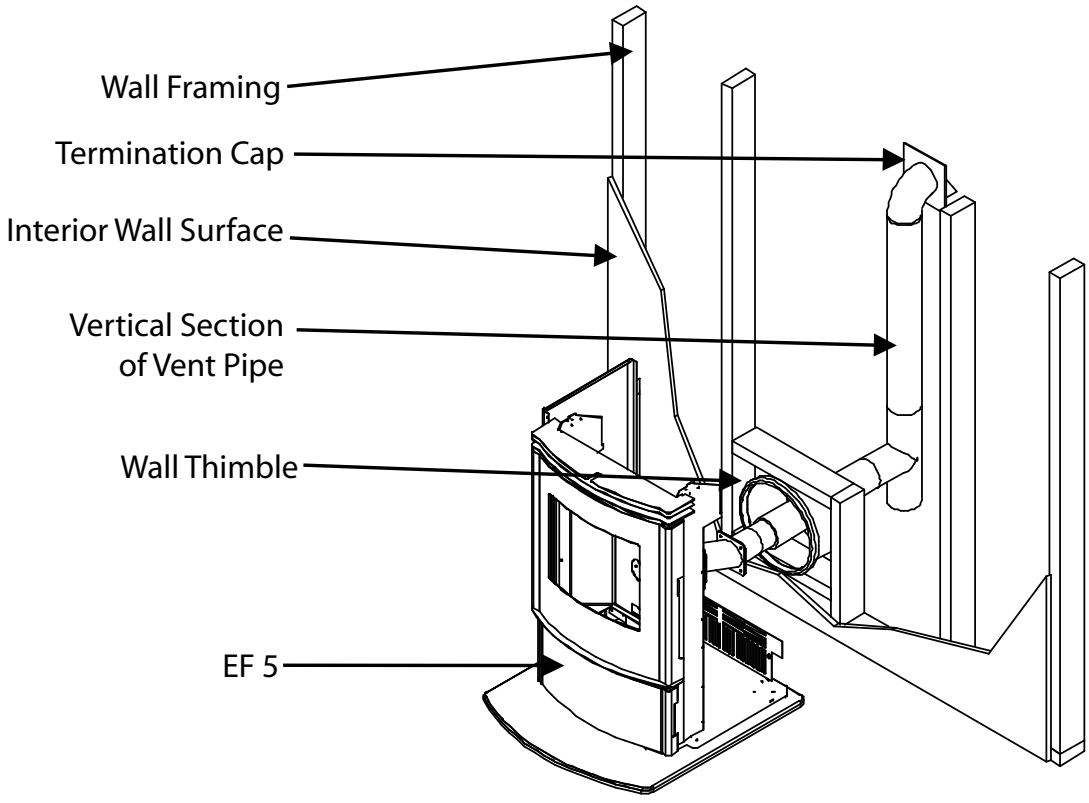

Installation

Vertical Installation:

1. Choose a stove location that is ideal. See the section Deciding Where to Locate Your Pellet Appliance.
2. Place the unit on the hearth pad (if installed on a carpeted surface) and space the unit in such a manner that when the pellet vent is installed vertically, it will be 3" (76 mm) away from a combustible wall.
3. Locate the center of the fresh air intake pipe on the unit. Match that center with the same point on the wall and cut a hole about 2 1/8 (53.9 mm) in diameter.
4. Install the fresh air intake pipe.
5. Install the tee with clean out.
6. Install the pellet vent upward from there. When you reach the ceiling, make sure that the vent goes through the ceiling fire stop. Maintain a 3" (76 mm) distance to combustibles and keep attic insulation away from the pipe.
7. Finally, extend the pellet vent to go through the roof flashing.
8. Ensure that the rain cap is approximately 36" (900 mm) above the roof.
9. The same methods apply for vertical installation outside. Install wall thimble and pipe supports.

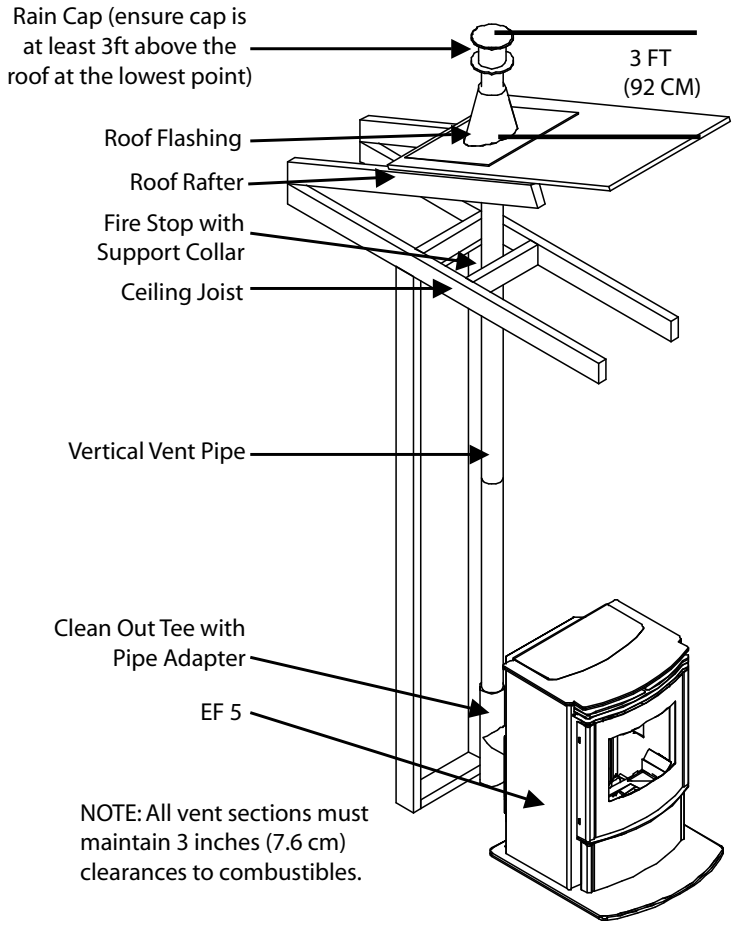

Installation

Hearth Mount Installation:

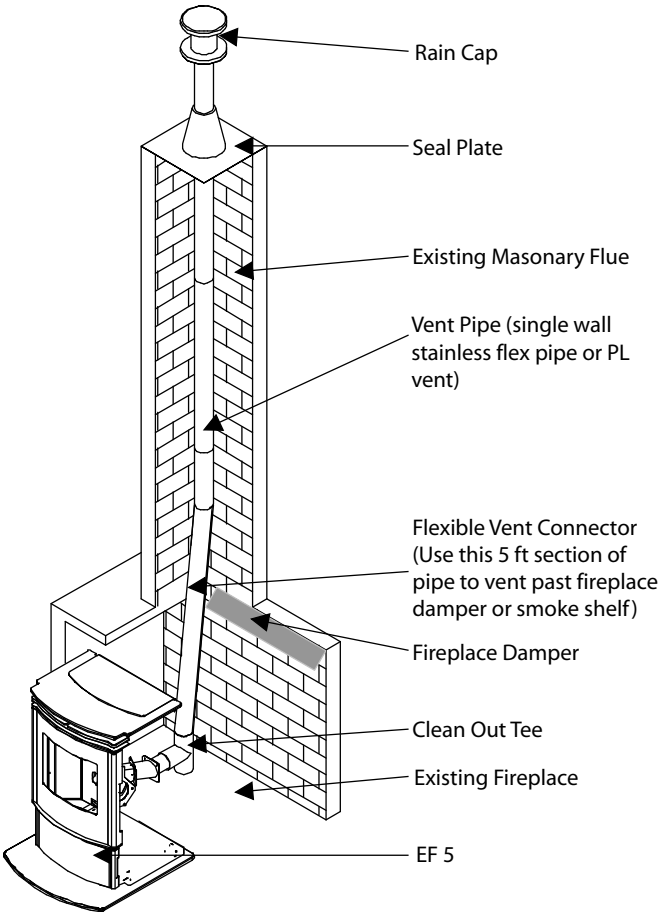

1. Lock fireplace damper in the open position.

2. Install positive flue connector at the fireplace dampers.

3. Connect a Tee or a 90° degree elbow to the exhaust pipe.

4. Install flexible stainless steel liner or listed pellet vent to the top of the chimney.

Through Concrete Wall With Vertical Rise Installations:

A 45° elbow with a rodent screen may be used in place of the termination cap (or stainless steel termination hood).

Installation to use if there is a concrete or retaining wall in line with exhaust vent on pellet stove.

The termination must be 12 inches (30 cm) from the outside wall and 12 inches (30 cm) above the ground.

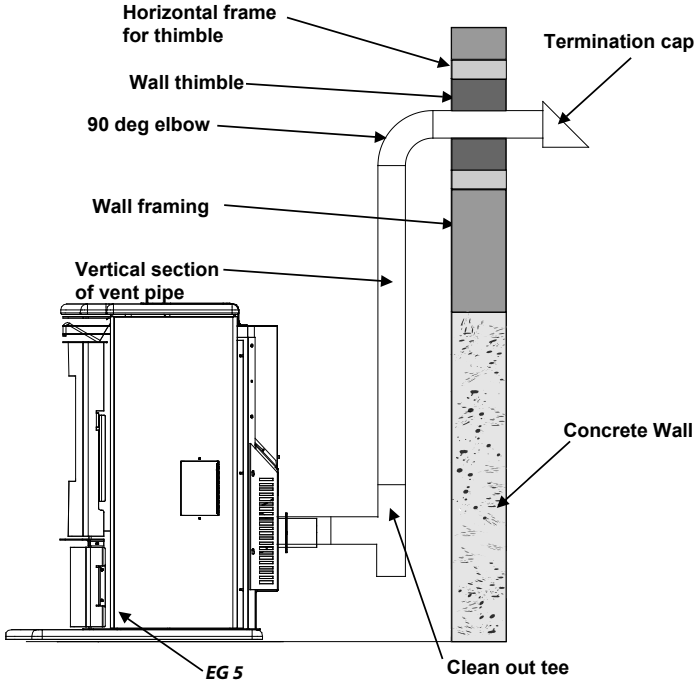

Installation

Exterior Mounted Exhaust Blower:

The EF 5 can be equipped with an externally mounted exhaust blower. This optional kit includes all components necessary to install the exhaust blower on any vertical wall surface.

Choose a location for your stove that meets the requirements stated in your manual and allows installation with the least amount of interference with house framing, plumbing, wiring, etc.

Included in the Exterior Mounted Exhaust Blower Kit are:
1 - Exhaust blower housing box.
1 - Blower cover plate.
1 - Hardware bag

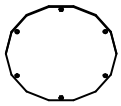

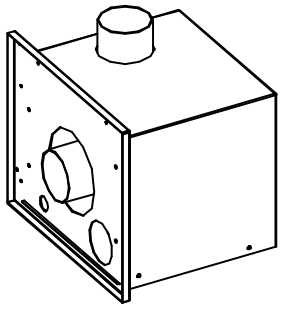

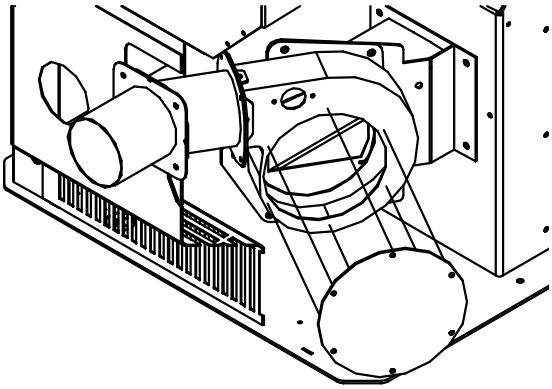

1. Follow the INSTALLATION INSTRUCTIONS Section – "Horizontal through the wall"

2. Remove the left hand cabinet side by removing the (2) two screws down the front. Loosen the three screws on the back of the cabinet side and remove panel.

3. Loosen the (6) six screws that hold the back grill in place. Lift the back grill off the screws.

4. Disconnect the Exhaust blower wires from the wire harness. Remove the exhaust blower motor from the housing [(6) six screws]. Cover hole in housing with cover plate provided.

5. Remove the cover from the exhaust blower housing box.

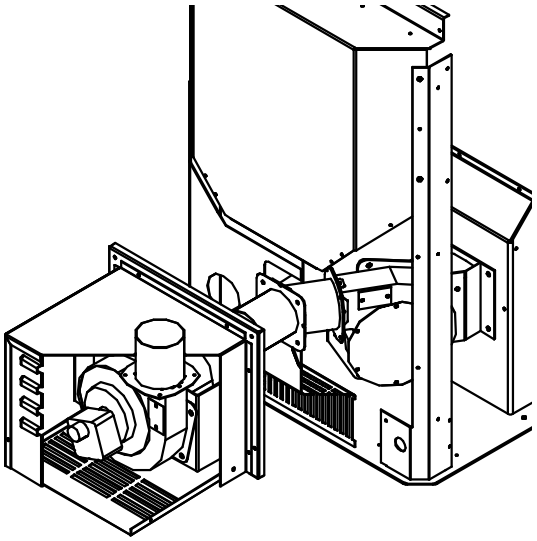

6. Install the exhaust blower housing box into the pipe placed through the wall thimble, seal with high temp. silicone. Fasten the box to the wall with (4) four screws, seal edges of box to wall with clear silicone.

7. Drill a hole through the wall thimble for the electrical wires. Pass the armored cable through the wall thimble. Use the strain relief provided.

8. Install the Exhaust Blower motor into the external exhaust blower housing box. Make the electrical connections to the wire harness and exhaust blower.

9. Replace the cover on the Exhaust Box and the back grill of the stove and ensure the screws are tightened down.

10. Install vertical pipe as instructed in appropriate section.

Installation

Typical Through Wall Termination Installation:

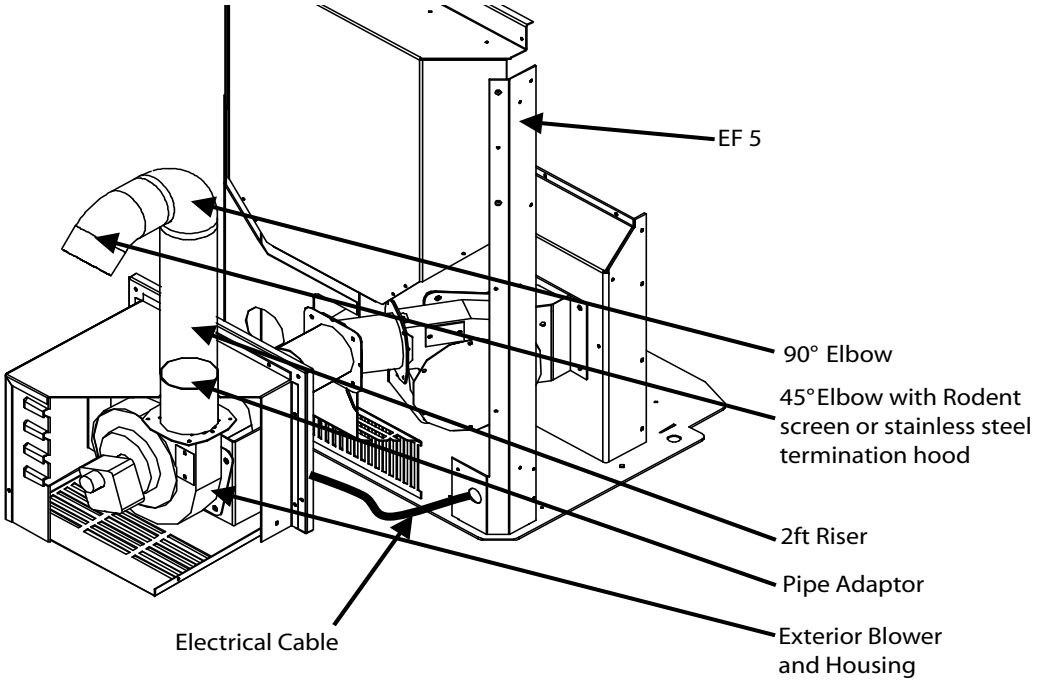

NOTE:

Ensure that all vent connections are installed by placing a small bead of high temperature silicone at each chimney connection.

Also ensure that all vertical vent sections are properly supported and that all clearances to combustibles are maintained in accordance with the vent manufacturer's specifications.

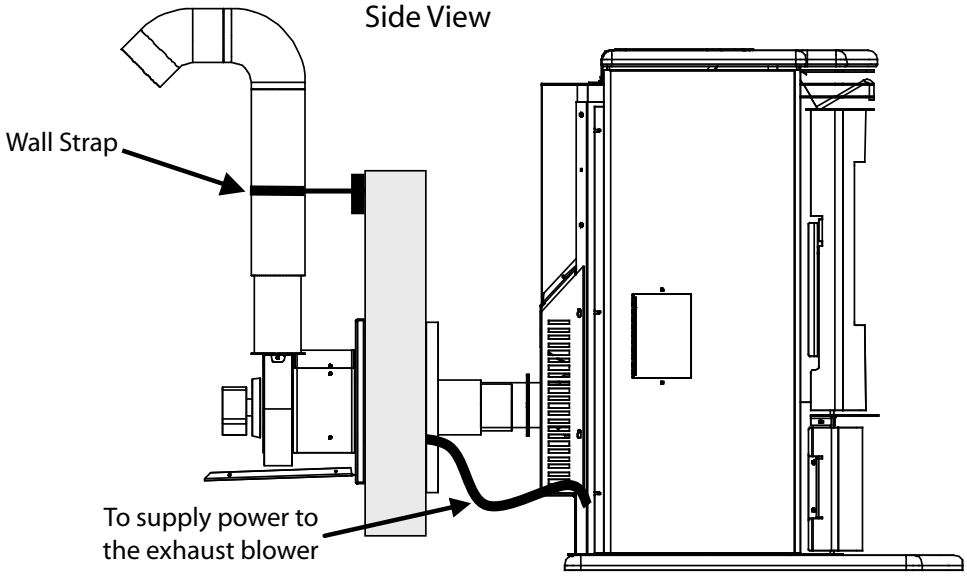

Install an amour coated electrical cable from the exhaust blower housing, through the wall thimble and attach to the pre drilled hole in the left hand rear hopper pillar. Hook up to wires from the exhaust blower wiring harness.

All electrical connections must be in accordance to local code requirements

Through Wall Vertical Installation:

Follow the previous pages for through wall installations. Ensure that vent pipe is properly secured to wall using wall straps. Maintain clearances to combustibles on vent pipe as well as unit.

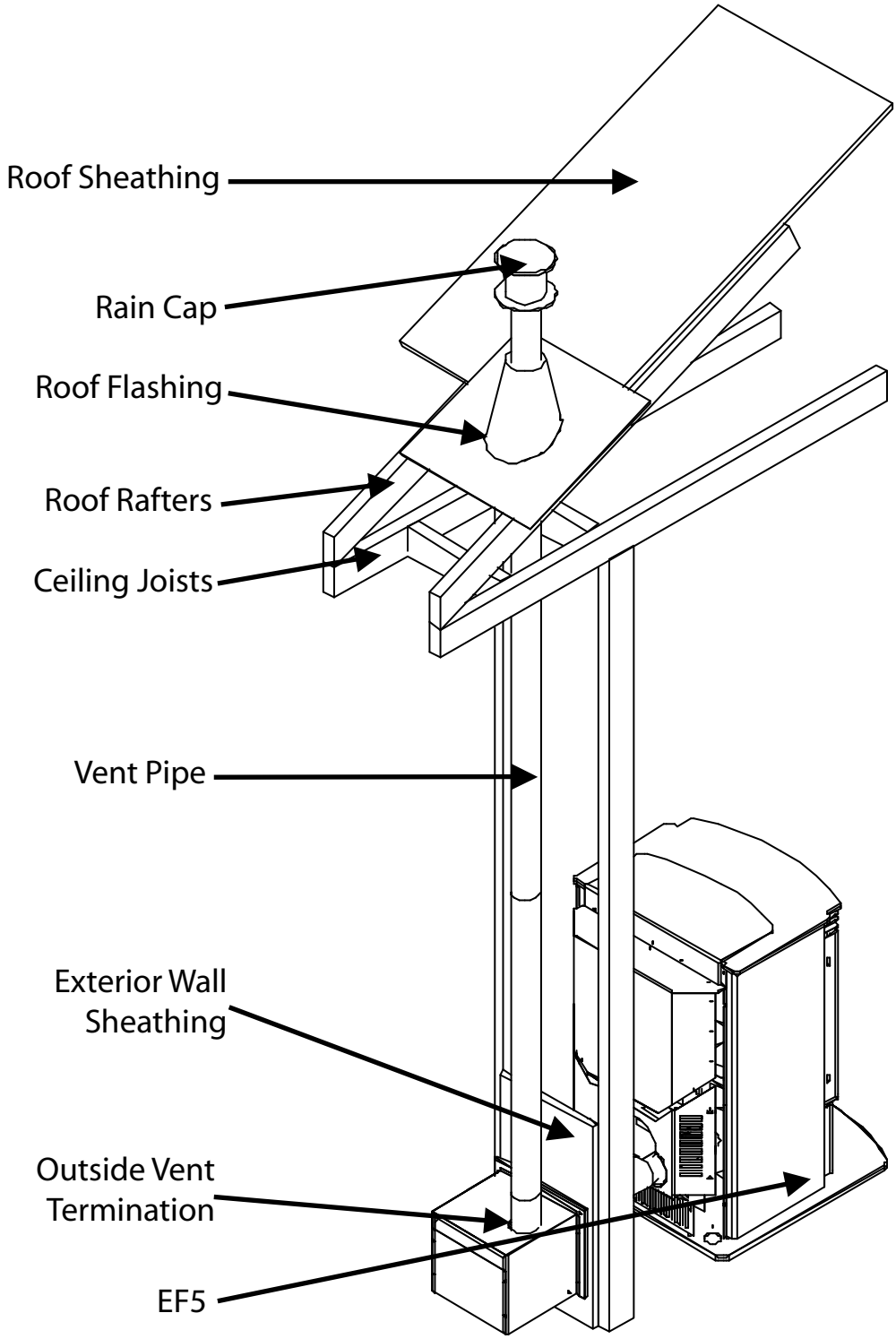

Troubleshooting

DO NOT:

● Service the stove with wet hands. The stove is an electrical appliance, which may pose a shock hazard if handled improperly. Only qualified technicians should deal with possible internal electrical failures.

● Do not remove from the firebox any screws without penetrating oil lubrication.

WHAT TO DO IF:

The stove will not start.

The stove will not operate when hot.

The exhaust blower will not function normally.

The convection blower will not function normally.

Ignitor : The pellets will not light.

The auger motor does not function normally.

Control settings (heat level) has no effect on fire.

The stove will not shut off.

The stove keeps going out.

***NOTE: All troubleshooting procedures should be carried out by qualified technicians or installers.**

The stove will not start

✓Make sure the stove is plugged in and the wall outlet is supplying power..

✓If the Control Board has been placed in the ON /OFF thermostat mode, then turn the thermostat up to call for heat.

✓Check the Heat Level Indicator. - If the # 2 light is flashing (see the # 2 light is flashing)

✓If the unit still does not start, contact your local service dealer for service.

The stove will not operate when hot

✓Check the Heat Level Indicator if a fire is not detected, or if the fire has gone out **the #3 light will flash** because the Exhaust Temperature Sensor's contacts have opened.

✓Check the hopper for fuel.

✓Incorrect air damper setting. - Excessive air may consume the fire too quickly before the next drop of fuel, leaving completely unburned fuel in the burn pot liner. - Insufficient air will cause build up, further restricting the air flow through the Burn Pot Liner. This in turn will cause the fuel to burn cold and very slowly. Fuel may build up and smother the fire. **(NOTE: unit may require a change to the vent system or installation of fresh air to correct Air to Fuel ratio problems).**

✓Combustion Blower failure. - The Combustion Blower is not turning fast enough to generate the proper vacuum in the fire box. Visual Check – is the blower motor turning.

Troubleshooting

✓Check the Exhaust Blower voltage across the blower wires (>=220V on #5 setting and >= 165V on #1 setting). – Replace the Circuit Board if the Voltage reading is less than 160V. with a line voltage >220Vac.

✓Check Vacuum levels in the exhaust channel by bypassing the Vacuum Switch, then remove the Vacuum hose from Vacuum Switch. Check exhaust vacuum readings by placing the open end of the Vacuum Hose on a Magnahelic Gauge (readings must be above .10" W.C. on low fire).

If the motor fails to reach a 0.10" w.c. readings, then replace the Combustion Blower.

✓Poor Quality Fuel – Insufficient energy in the fuel to produce enough heat to keep the stove burning or operational.

✓Exhaust Temperature Sensor failure. – Bypass sensor located on Exhaust Blower if stove now operates properly, the unit may require cleaning or a new sensor. Contact your local dealer for service.

The exhaust motor will not function normally

✓Open the left side access panel; check all connections against the wiring diagram.

✓See above section.

Light # 2 on Heat output bar flashing – The Vacuum Switch contacts have opened for more than 15 sec.

✓Pinch, break or blockage in Vacuum Hose - Check hose for pinch points or damage, replace or re-route as required. Blow out Vacuum Hose

✓Blocked Hose Barb on Exhaust Channel - Use a paper clip to clean out Hose Barb or remove the Vacuum Hose from the Vacuum Switch and blow into the hose to remove blockage.

✓Blocked exhaust / venting system - Have stove and venting cleaned and inspected.

✓Severe negative pressure in area where unit is installed - Check the operation by opening a window, does this solve the problem? If it does, install fresh air intake to unit or room. Venting system may require vertical section to move termination into a low pressure zone.

✓Vacuum Switch failure - Bypass the vacuum switch, if this corrects the problem check for above problems before replacing the Vacuum Switch.

✓Damage to gray wires between Circuit Board and Vacuum Switch - Inspect wires and connectors

✓Combustion Blower failure - The Combustion Blower is not turning fast enough to generate the proper vacuum in the Exhaust Channel. Visual Check; is the blower motor turning? Check the Exhaust Blower voltage across the blower wires (>=220V on #5 setting and >= 165V on #1 setting). Replace the Circuit Board if the Voltage reading is less than 160 V. with a line voltage >220Vac.

✓Check Vacuum levels in the exhaust channel by bypassing the vacuum switch, then remove the Vacuum hose from Vacuum Switch. Check exhaust vacuum readings by placing the open end of the Vacuum Hose on a Magnahelic Gauge. (readings must be above .10" W.C. on low fire).

If the motor fails to reach a 0.10" w.c. readings, then replace the Combustion Blower

To reset Circuit Board after a trouble code - push the ON/OFF button

Troubleshooting

Auger light flashes but auger motor does not turn at all:

✓If the Auger gear box does not turn but the motor's armature does try to spin then the auger is jammed. – Try to break apart jam by poking at the jam through the drop tube. If this fails then empty the hopper and remove the Auger Cover **Remember to re-seal the cover after installation**

The 200°F (93°C) high limit temperature sensor has tripped.

✓Reset sensor and determine cause – was it Convection Blower failure or 160°F (71°C) Temperature Sensor failure? Bypass the 160 sensor, does the Convection blower come on high if not replace the blower?

The convection blower will not function normally

✓Clean all grill openings at the back and below unit .
✓Press the fan button; does the fan come on? Press again to verify that the blower turns on; if, not contact your local dealer for service.

Igniter- the pellets will not light

✓Everything else in the stove operates but the ignitor will not light the pellets.
✓Make sure the burn pot liner is up tight and square to the ignitor tube by pushing the burn pot back against the ignitor tube.
✓Check to see if the exhaust blower is operating. If not, contact your local dealer for service.

NOTE: The ignitor should be bright orange in color. If not replace the ignitor.

Control settings (Heat Level) has no effect on the fire

✓NOTE: If the system light is flashing the Control Board has complete control of the unit. When the units system light becomes solid then control of the unit is given back to the operator.
✓If there is no control of the Heat Level button make sure the thermostat is calling for heat.
✓Call your local dealer for service.

The stove keeps going out

If the stove goes out and leaves fresh unburned pellets or cigarette-like ashes in the burn pot liner, the fire is going out before the stove shuts off.

✓Check to see that the Slider / Damper is in the correct position.
✓Turn the Heat Level up slightly (poor quality pellets will require slightly higher settings).
✓Set the auger trim till the #1 and #5 lights are illuminated.

If the stove goes out and there are partially burned pellets left in the burn pot liner, the stove has shut down due to a lack of air, exhaust temperature, or power failure.

✓Adjust the Slider / Damper.
✓Check to see if the stove needs a more complete cleaning.
✓Turn the Heat Level up slightly (poor quality pellets will require slightly higher settings).
✓Did the power go out?
✓Contact your local Dealer for service.

Wiring Diagram

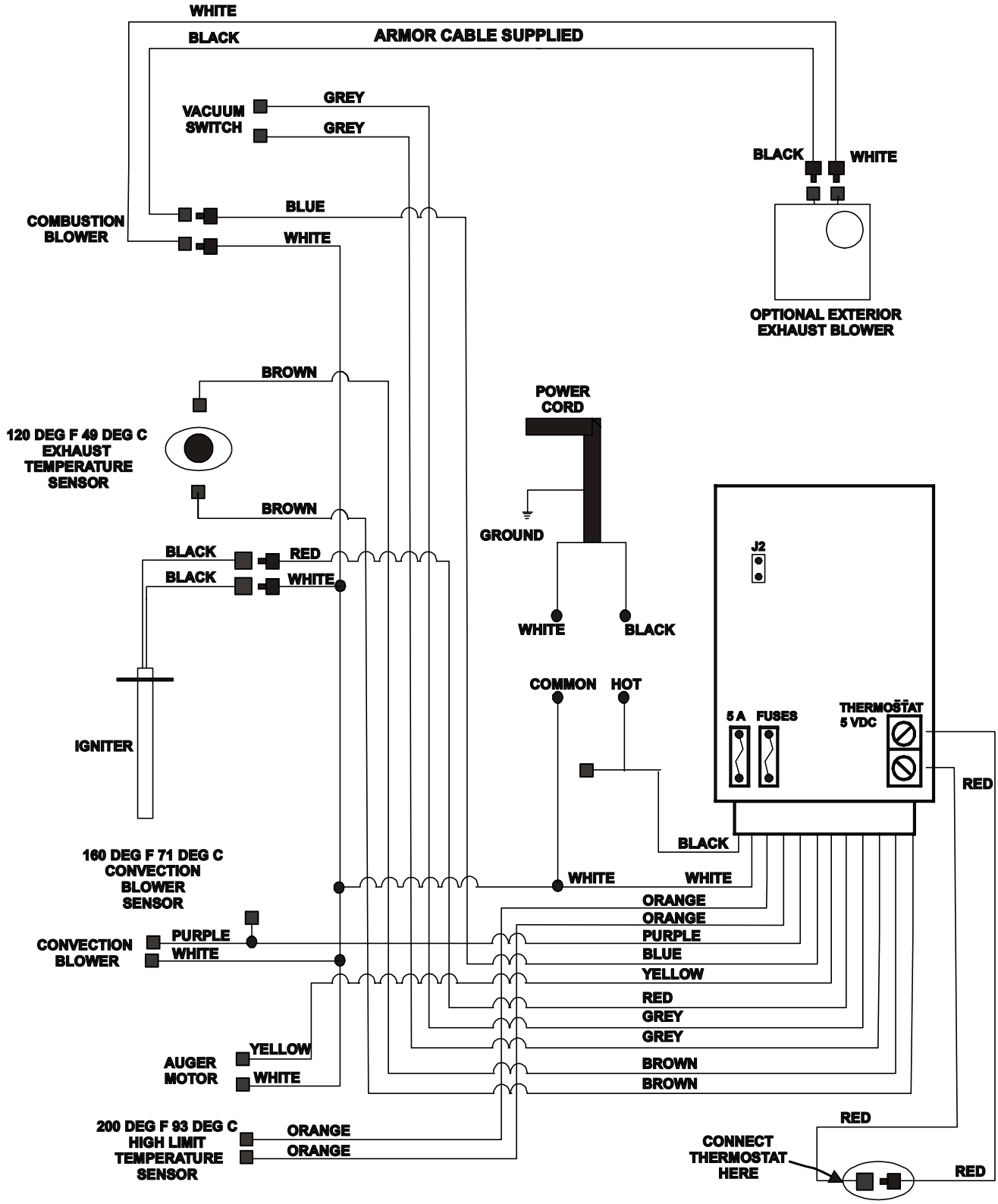

Parts Diagram - Components

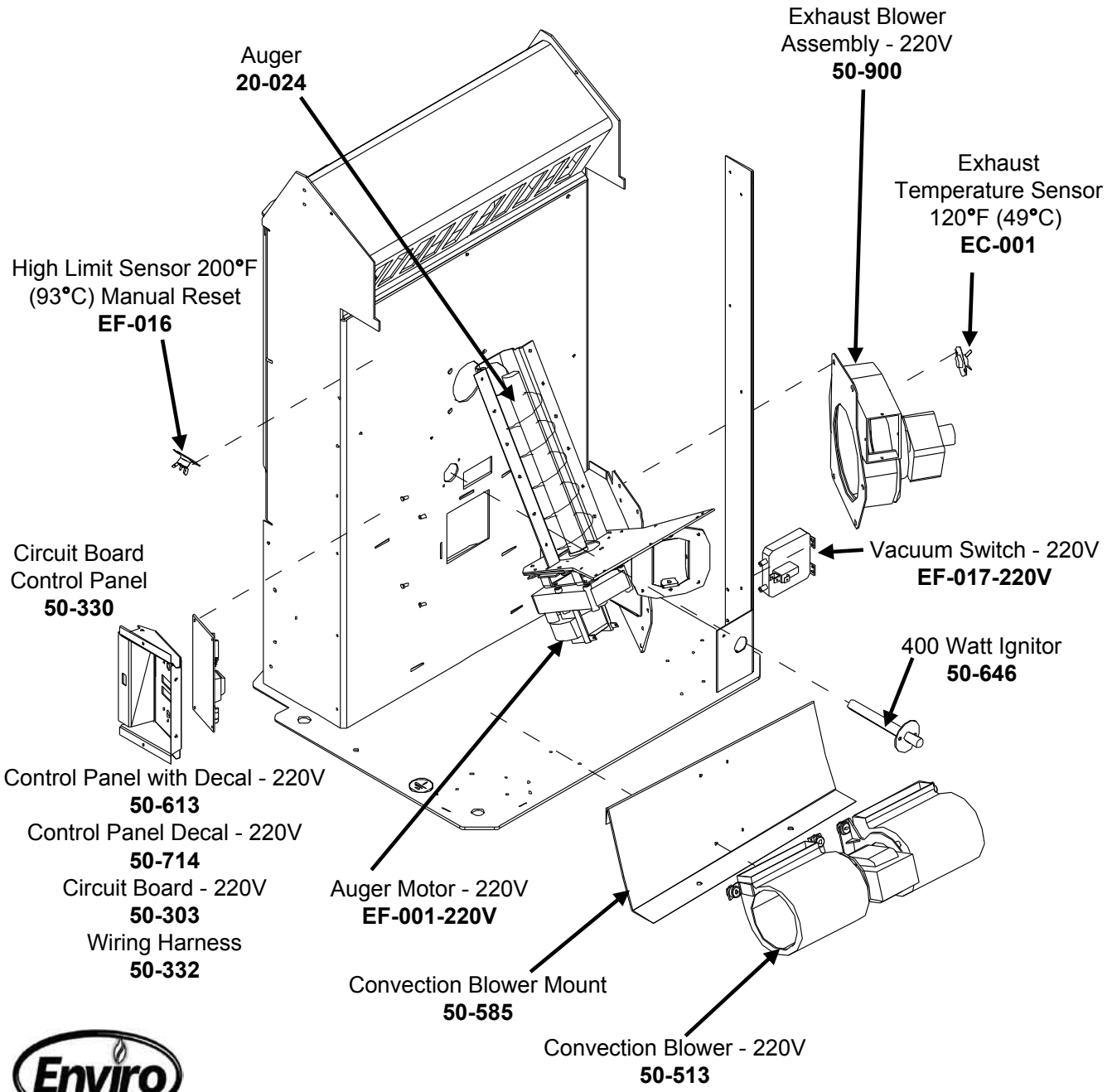

EVOLUTION - Components

December 2003

Parts Diagram - Steel

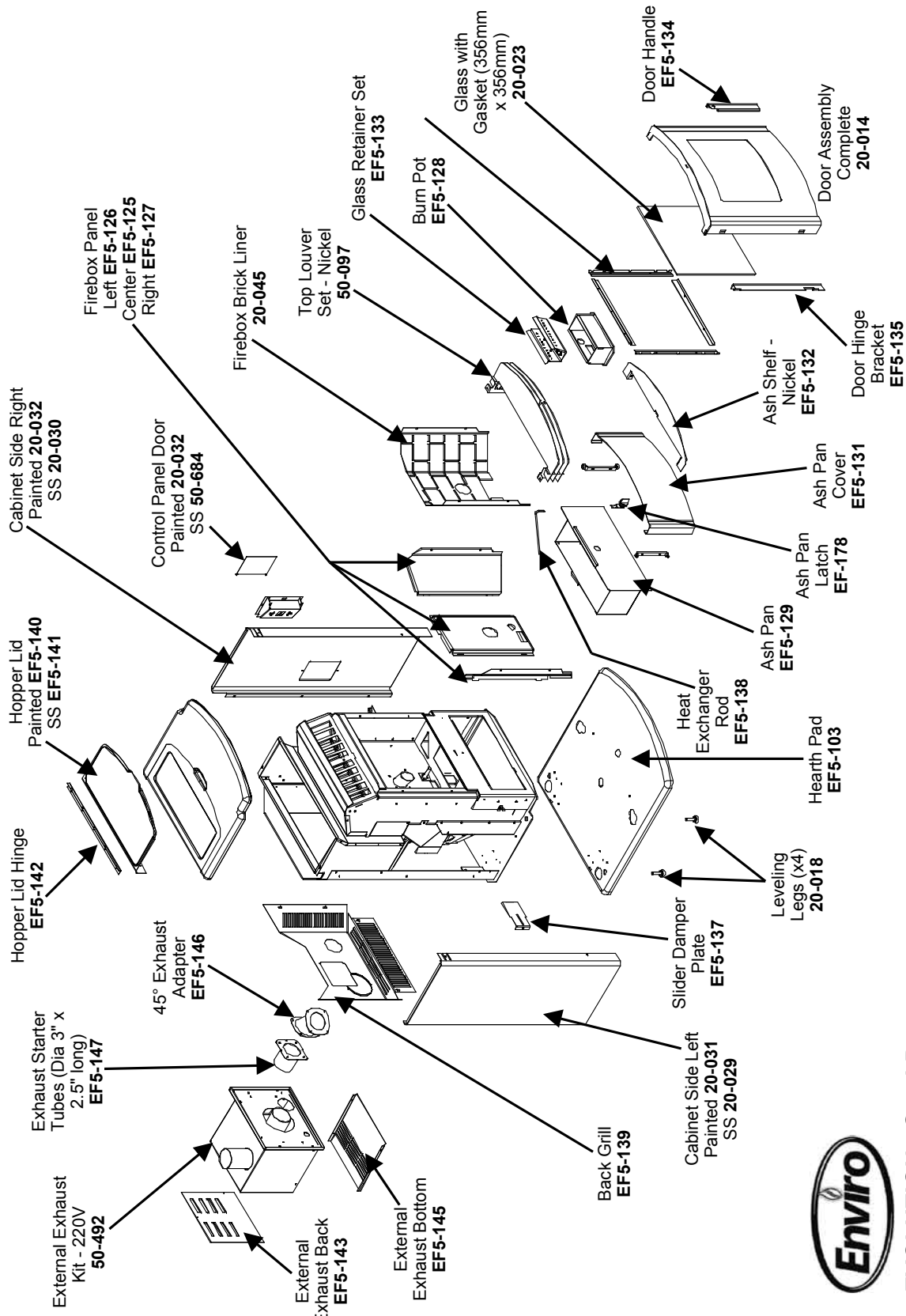

Warranty

Sherwood Industries Ltd. gives a five year limited warranty on all steel manufactured parts. A one-year warranty is provided on all electrical components. The above limited warranties are extended only to the original purchaser.

There is no warranty on the following parts:

- Fiberglass rope baskets
- refractory material
- burn pot liner
- paint
- enamel finish or gold plating where it applies
- vacuum hose.

****NOTE:** The paint on the brick firebox lining may peel. This is due to the extreme conditions applied to the paint and is in no way covered under warranty.

WHEN FILING A WARRANTY CLAIM PLEASE COMPLETE THE FOLLOWING INFORMATION ON AN OFFICIAL WARRANTY CLAIM FORM:

TO THE DEALER:

- Name, Address and Telephone Number of purchaser and date of purchase.
- Date of Installation. Name of the installer and dealer. Serial Number of the appliance. Nature of the complaint, defects or malfunction, description and part # of any parts replaced.

TO THE DISTRIBUTOR:

- Sign and verify that work and information are correct.

ENSURE THAT YOU SPECIFY THE NATURE OF THE COMPLAINT, DEFECT, PERIODICAL MALFUNCTION, ETC.

The limited warranty covers defects in materials and workmanship as long as the products has been installed according to the manual's instruction. If the product is damaged or broken as a result of mishandling or misuse, the warranty does not apply. Removal and re-installation costs are not covered under this warranty.

It is the manufacturer's option whether to repair or replace the appliance. The shipping cost to and from the factory is paid by the consumer. All warranties by the manufacturer are set forth herein and no claim shall be made against the manufacturer on any oral warranty or representation.

Sherwood Industries Ltd. assumes no responsibility for damage caused by household power fluctuations or power surges.

Under Warranty

For the do-it-yourself Individual

The consumer should be aware that the pellet appliance needs setting using tools that he/she might not have. Consult an ENVIRO dealer. It is recommended than only an authorized ENVIROFIRE dealer installs an ENVIRO unit. There will be no warranty coverage on parts destroyed or burnt out as a result of a consumer installation error or defect.

Sherwood Industries Ltd. reserves the right to make changes without any notice.

Installation Data Sheet

The following information must be recorded by the installer for warranty purposes and future reference.

NAME OF OWNER:

_____

ADDRESS:

_____

_____

_____

PHONE:_____

NAME OF DEALER:

_____

ADDRESS:

_____

_____

_____

PHONE:_____

MODEL:_____

SERIAL NUMBER:_____

DATE OF PURCHASE: _____ (dd/mm/yyyy)

DATE OF INSTALLATION:_____(dd/mm/yyyy)

MAGNEHELIC AT INSTALL:_____

INSTALLER'S SIGNATURE:

_____

NAME OF INSTALLER:

_____

ADDRESS:

_____

_____

_____

PHONE:_____

MANUFACTURED BY:
SHERWOOD INDUSTRIES LTD.
6782 OLDFIELD RD. SAANICHTON, BC, CANADA V8M 2A3
www.envirofire.biz
December 4, 2003
C-10176