SHERWOOD INDUSTRIES IS AN ENVIRONMENTALLY RESPONSIBLE COMPANY. THIS MANUAL IS PRINTED ON RECYCLED PAPER.

PLEASE KEEP THESE INSTRUCTIONS FOR FUTURE REFERENCE

Enviro

PELLET STOVE

Evolution

OWNER'S MANUAL



Contact your building or fire officials about restrictions and installation inspection requirements in your area.

INTERTEK C Warnock Hersey US

PLEASE READ THIS ENTIRE MANUAL BEFORE INSTALLATION AND USE OF THIS PELLET-BURNING ROOM HEATER. FAILURE TO FOLLOW THESE INSTRUCTIONS COULD RESULT IN PROPERTY DAMAGE, BODILY INJURY OR EVEN DEATH.

50-1021

Table of Contents

Table of Contents....2
Introduction....3
- Important Safety Data....3
- Safety Warnings And Recommendations....3
- Important Safety Data....5
- Warnings and Recommendations....5

Specifications....6
- Rating Label Location....6
- Appliance Dimensions....6
- Clearances to Combustibles....7
- Alcove Clearances....7
- Exhaust and Fresh Air Intake Dimensions....8

Operating Instructions....9
- Control Board Functions....9
- Automatic Safety Features of Your Pellet Stove....9
- Thermostat Modes....10
- Turning Stove On Without Thermostat....10
- Slider/Damper Set-Up....11

Routine Cleaning and Maintenance....12
Installation....14
- Deciding Where To Locate Your Pellet Stove....14
- Removing Your Pellet Stove From The Pallet....14
- Optional Slider/Damper Rod Installation....14
- Optional Hearth Pad Pedestal Installation....15
- Vent Termination Requirements....16
- Horizontal Trough Wall Installation....17
- Straight Through Wall Installation....18
- Through Wall With A Vertical Rise (Recommended)....18
- Vertical Installation....19
- Hearth Mount Installation....20
- Through Concrete Wall With Vertical Rise Installations....20
- Optional Exterior Mounted Exhaust Blower....21
- Typical Through Wall Termination Installation With Exhaust Blower....22
- Through Wall Vertical Installation With Exhaust Blower....23

Troubleshooting....24
- Fuses....26

Wiring Diagram....27
Parts Diagram - Components....28
Parts Diagram - Steel....29
Warranty....30
Installation Data Sheet....31

Introduction

Important Safety Data:

TO PREVENT THE POSSIBILITY OF A FIRE, THIS APPLIANCE MUST BE PROPERLY INSTALLED BY FOLLOWING THE INSTALLATION INSTRUCTIONS. PLEASE READ THIS ENTIRE OWNER'S MANUAL BEFORE INSTALLING OR OPERATING YOUR ENVIRO PELLET STOVE. FAILURE TO FOLLOW THESE INSTRUCTIONS MAY RESULT IN PROPERTY DAMAGE, BODILY INJURY OR EVEN DEATH. CONTACT YOUR LOCAL BUILDING OR FIRE OFFICIALS TO OBTAIN A PERMIT AND ANY INFORMATION ON ANY INSTALLATION RESTRICTIONS AND INSPECTION REQUIREMENTS FOR YOUR AREA. An ENVIRO dealer will be happy to assist you.

The stove's exhaust system works with negative combustion chamber pressure and a slightly positive chimney pressure.

IT IS VERY IMPORTANT TO ENSURE THAT THE EXHAUST SYSTEM BE SEALED AND IS AIRTIGHT.

Safety Warnings And Recommendations:

Fuel:

This pellet stove is designed and approved to only burn wood pellet fuel with up to 8% ash content. Dirty fuel will adversely affect the operation and performance of the unit and may void the warranty. Check with your dealer for fuel recommendations.

THE USE OF CORDWOOD IS PROHIBITED BY LAW.

Soot:

Operation of the stove with insufficient combustion air will result in the formation of soot which will collect on the glass, the heat exchanger, the exhaust vent system and may stain the outside of the house. This is a dangerous situation and is inefficient. Frequently check your stove and adjust the slider/damper as needed to ensure proper combustion. **See: "Operation - Slider/Damper"**

Cleaning:

There will be some build up of fly ash and small amounts of creosote in the exhaust. This will vary due to the ash content of the fuel used and the operation of the stove. It is advisable to inspect and clean the exhaust vent annually or every two tons of pellets.

Ashes:

Disposed ashes should be placed in a metal container with a tight fitting lid. The closed container of ashes should be on a non-combustible floor on the ground, well away from all combustible materials pending final disposal. If the ashes are disposed of by burial in soil or otherwise locally dispensed, they should be retained in the closed container until all cinders have been thoroughly cooled.

Electrical:

THE USE OF A SURGE PROTECTED POWER BAR IS RECOMMENDED.

The maximum power requirement is 540 watts (4.5 amp) at start-up. The stove has a grounded electrical cord and should be connected to a standard 115 volt, 60 Hz grounded electrical outlet. Make sure the electrical cord is not trapped under the appliance and that it is clear of any hot surfaces or sharp edges. When installing the stove in a mobile home, it must be electrically grounded to the steel chassis of the home and bolted to the floor in accordance with applicable local, state or federal codes.

Introduction

Glass:

Do not abuse the glass by striking or slamming the door. Do not attempt to operate the stove with broken glass. The stove uses ceramic glass. Replacement glass must be purchased from an ENVIRO dealer. Do not attempt to open the door and clean the glass while the unit is in operation or if glass is hot.

Flammable Liquids:

Never use gasoline, gasoline-type lantern fuel, kerosene, charcoal lighter fluid, or similar liquids to start or "freshen up" a fire in the heater. Keep all such liquids well away from the heater while it is in use.

Smoke Detector:

Smoke detectors should be installed and maintained in the structure when installing and operating a pellet burning appliance.

Operation:

The ash pan and door must be closed securely for proper and safe operation of the pellet stove. Also ensure all gaskets on the door are checked and replaced when necessary.

KEEP ASH PAN FREE OF RAW FUEL.

DO NOT PLACE UNBURNED OR NEW PELLET FUEL IN ASH PAN. A fire in the ash pan may occur.

Installation:

Be sure to maintain the structural integrity of your home when passing a vent through walls, ceilings, or roofs.

DO NOT INSTALL A FLUE DAMPER IN THE EXHAUST VENTING SYSTEM OF THIS UNIT.

DO NOT CONNECT THIS UNIT TO A CHIMNEY FLUE SERVING ANOTHER APPLIANCE.

Fresh air:

Must be connected to all units installed in Mobile Homes as well as "Air Tight Homes" (R2000). Fresh air intake is recommended on all installations. Failure to install intake air may result in poor performance, smoke, property damage, house fire, bodily injury or death under certain conditions.

If you have any questions with regards to your stove or the above-mentioned information, please feel free to contact your local dealer for further clarification and comments.

SINCE SHERWOOD INDUSTRIES LTD. HAS NO CONTROL OVER THE INSTALLATION OF YOUR STOVE, SHERWOOD INDUSTRIES LTD. GRANTS NO WARRANTY IMPLIED OR STATED FOR THE INSTALLATION OR MAINTENANCE OF YOUR STOVE. THEREFORE, SHERWOOD INDUSTRIES LTD. ASSUMES NO RESPONSIBILITY FOR ANY CONSEQUENTIAL DAMAGE(S).

SAVE THIS INSTRUCTION MANUAL FOR FUTURE REFERENCE

Introduction

Important Safety Data:

This unit is designed to burn pelletized wood fuel only. Do not use any other type of fuel, this will void any warranties stated in this manual.

The ash pan must be locked securely for proper and safe operation of the pellet stove.

Since Sherwood Industries Ltd. has no control over the installation of your stove, we grant no warranty implied or stated for the installation or maintenance of your stove, therefore, Sherwood Industries Ltd. assumes no responsibility for any consequential damage.

Warnings and Recommendations:

A. Do not abuse the glass by striking or slamming the door shut.

B. Do not attempt to operate the stove with broken glass.

C. Do not attempt to open the door and clean the glass while the unit is in operation. To clean the glass, use a soft cotton cloth and mild window cleaner, gas or wood stove glass cleaner or take a damp paper towel and dip into the fly ash, this is a very mild abrasive and will not damage the glass.

D. Do not use abrasive cleaners to clean the surface or any part of the stove.

E. It is recommended that the unit be secured into its' position in order to avoid any displacement.

F. Never use gasoline, gasoline-type lantern fuel, kerosene, or similar liquids to start the fire. Keep all such liquids well away from the pellet stove while it is in use.

G. Disposed ashes should be placed in a metal container with a tight-fitting lid. The closed container of ashes should be on a non-combustible floor on the ground, well away from all combustible materials pending final disposal. The ashes should be retained in the closed container until all cinders have thoroughly cooled before disposing of them.

H. Make sure the ash pan is closed tightly during the operation of the stove.

I. Fresh air intake is strongly recommended. Failure to install intake air may result in the unit smoking during power failures as well as improper combustion.

KEEP ASH PAN FREE OF RAW FUEL. DO NOT PLACE UNBURNED OR NEW PELLET FUEL IN ASH PAN. A fire in the ash pan could be the result.

Specifications

Rating Label Location:

The rating label is located on the inside of the ash pan cover.

Appliance Dimensions:

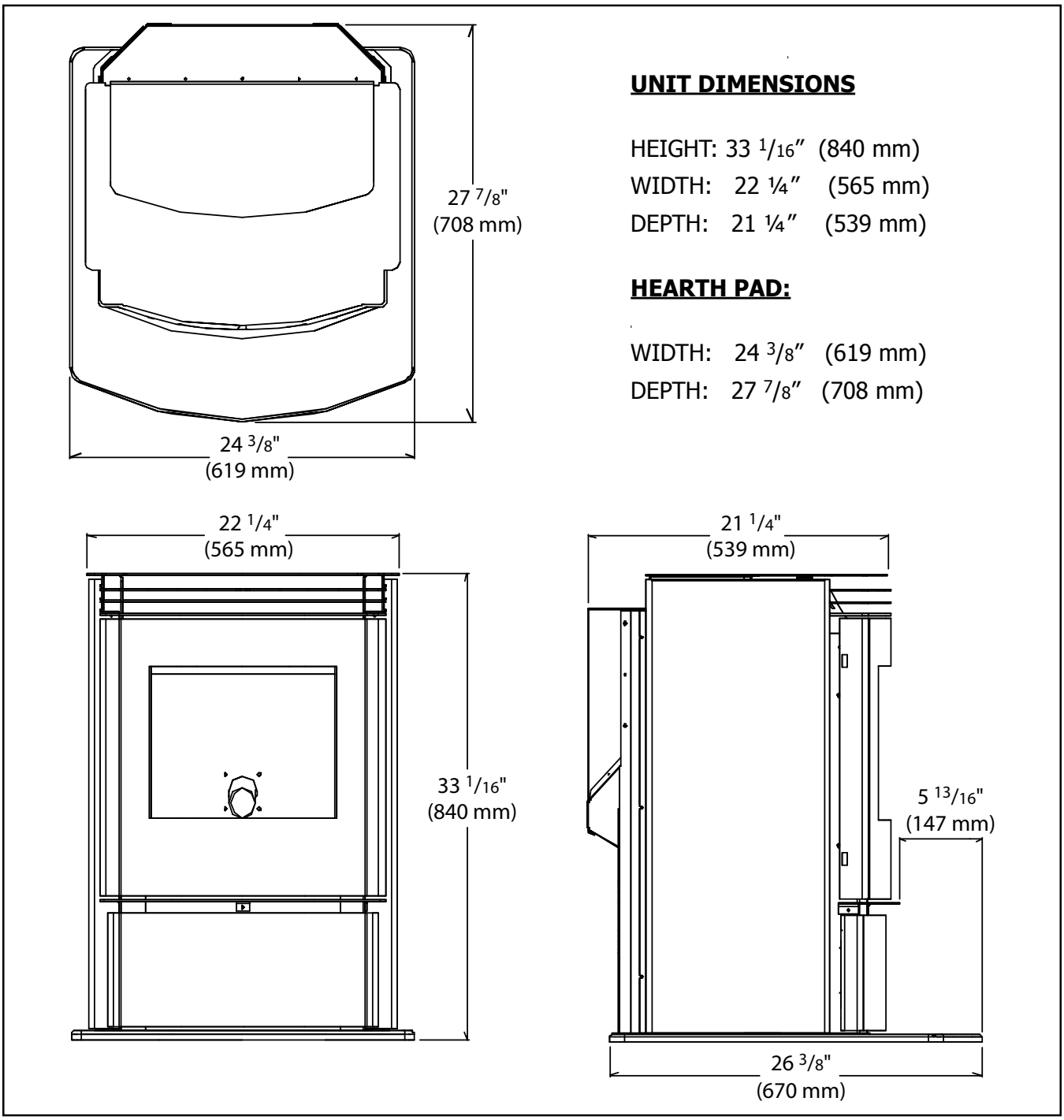

UNIT DIMENSIONS

HEIGHT: 33 1/16" (840 mm)
WIDTH: 22 ¼" (565 mm)
DEPTH: 21 ¼" (539 mm)

HEARTH PAD:

WIDTH: 24 3/8" (619 mm)
DEPTH: 27 7/8" (708 mm)

Figure 1

Specifications

Clearances to Combustibles:

This unit can be installed on a combustible floor with the use of the optional pedestal hearth pad (for example linoleum, hardwood flooring). If this unit is to be installed onto a carpeted surface, a hearth pad must be used for stability.

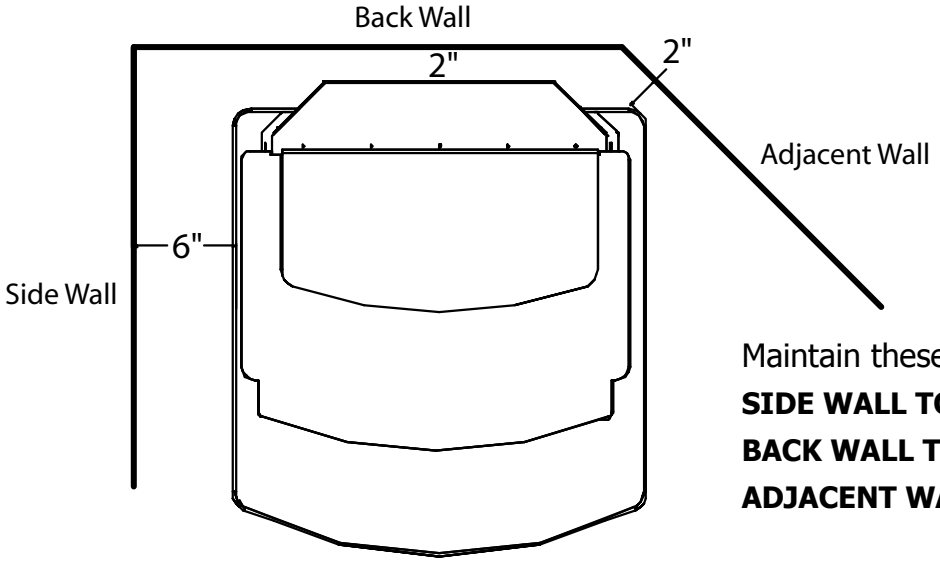

Figure 2

Maintain these clearances to combustibles.

SIDE WALL TO UNIT 6 inches (153 mm)
BACK WALL TO UNIT 2 inches (50 mm)
ADJACENT WALL 2 inches (50 mm)

Alcove Clearances:

This unit may be installed in an alcove. Maintain these clearances to combustibles.

MIN. ALCOVE WIDTH 36 inches (900 mm)
MIN. ALCOVE HEIGHT 48 inches (1200 mm)
MIN. ALCOVE DEPTH 48 inches (1200 mm)

Install vent at clearances specified by the vent manufacturer.

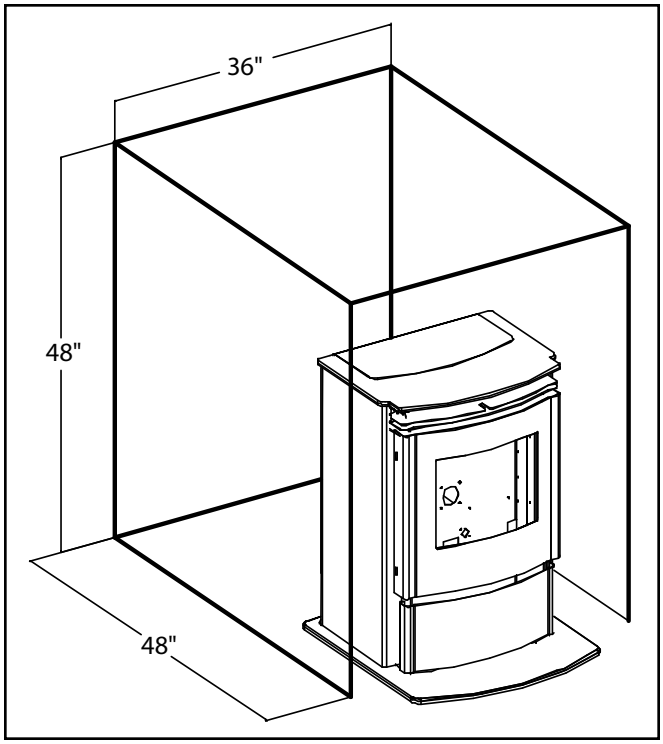

Figure 3

Specifications

Exhaust and Fresh Air Intake Dimensions:

(A) EXHAUST.

Base to center of flue 10.71 inches (27.2 cm)

Side to center of flue 10.62 inches (2.07 cm)

(B) FRESH AIR INTAKE.

Base to center of intake 8.47 inches (21.5 cm)

Side to center of intake 7.97 inches (20.5 cm)

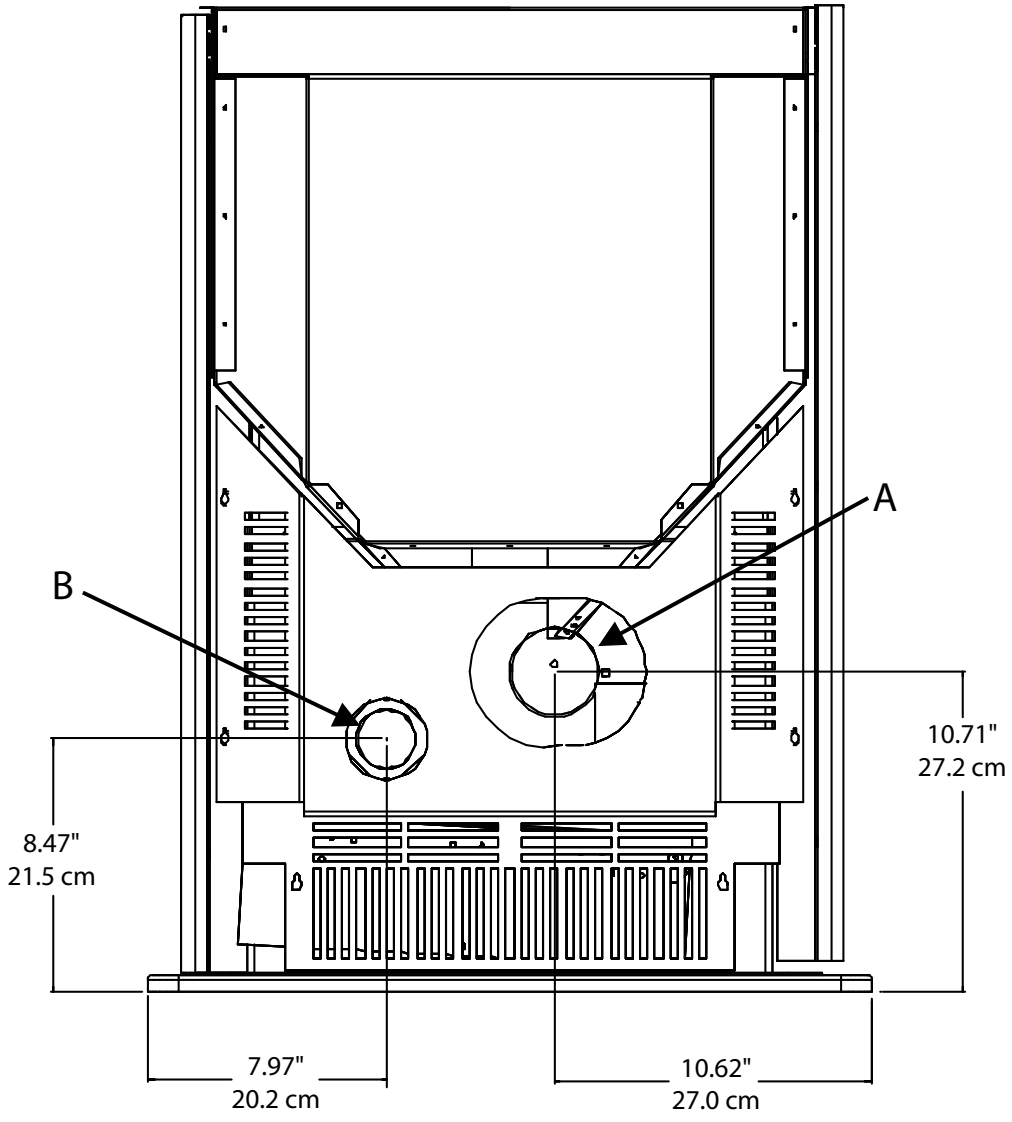

Figure 4

Operating Instructions

Control Board Functions:

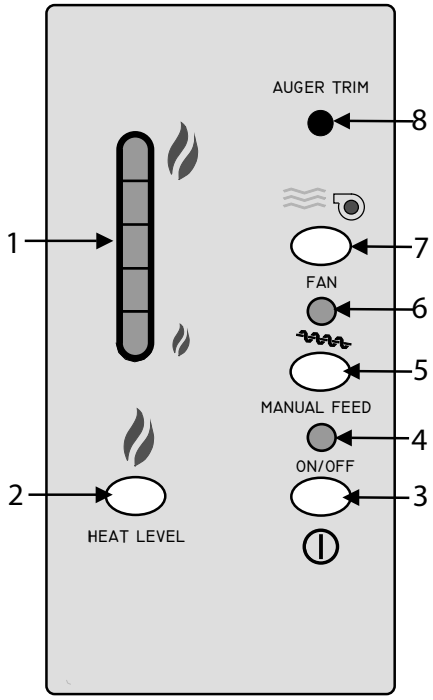

Figure 5

1. **HEAT LEVEL INDICATOR:** Shows the present heat level output setting.
2. **HEAT LEVEL ADJUSTMENT:** This button will change the Heat Level output setting of the stove from low to high
3. **ON/OFF BUTTON:** Is used to turn the unit ON and OFF
4. **SYSTEM LIGHT:** The System Light is responsible for signaling the state of the control board. When the light is flashing during start-up, the stove is in an automatic start mode. When the light is solid, the Heat Level Setting can be altered.
5. **MANUAL AUGER FEED:** If the unit runs out of fuel this button can be used to "prime the auger system". This button will turn off after 60 seconds and then must be released, then pressed again.
6. **AUGER LIGHT:** This light will flash when the auger motor is energized.
7. **CONVECTION BLOWER CONTROL:** Used to turn the convection blower ON/OFF. Leave the convection blower ON for peak efficiency.
8. **AUGER TRIM:** The Auger Trim Button is used to increase or decrease the feed rate on LOW, ONLY. Push the Auger Trim button until the number 1 and 5 lights appear on the Heat Level Indicator. This will increase the feed rate to 4 seconds ON time Auger pulse. This is done only on LOW to allow the burning of poor quality fuels. Push the button until the number 1 and 4 lights appear, this will reduce the Auger On time to 2 second. This setting is for high-grade fuel only. Push the button until just the number 1 light is on, this is for a 3 second on time (standard setting).

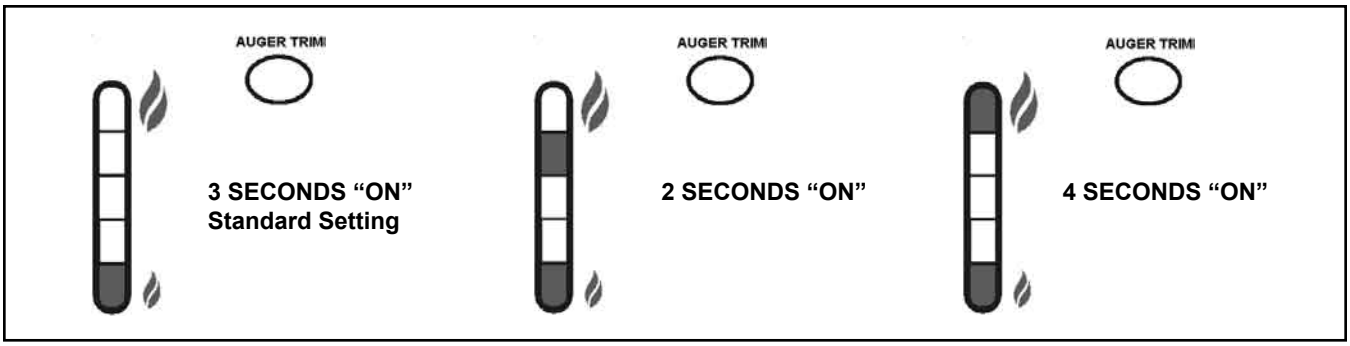

Figure 6

Automatic Safety Features of Your Pellet Stove:

A. The stove will shut off when the fire goes out and the exhaust temperature drops below 120 °F (49 °C).

B. The stove has a high temperature safety switch. If the temperature on the hopper reaches 200 °F (93 °C), the auger will automatically stop and the stove will shut down when the exhaust temperature cools. If this happens, call your local dealer to reset the 200 °F (93 °C) high limit switch. **ALSO FIND THE REASONS WHY THE UNIT OVERHEATED.**

Operating Instructions

Thermostat Modes:

This stove can be placed into two different thermostat modes:

HI / LOW OPERATION: If the unit has been placed in the HI / LOW mode. The unit will operate on the low setting when the thermostat is not calling for heat. When the thermostat calls for heat, the unit will go to your selected setting which is displayed on the control board Heat Output Indicator.

ON / OFF OPERATION: If the unit has been placed in the ON /OFF thermostat mode, when the thermostat calls for heat, the unit will go through an ignition sequence and light the stove. Once lit the unit will operate at the selected setting displayed on the control board Heat Output Indicator. Once the thermostat stops calling for heat, the unit will stop feeding pellets and begin its' shut down sequence until cold then turn off.

1. Install the Low Voltage Thermostat (max 24 V) in a location that will effectively monitor the desired area to be heated.
2. Open the right cab side to expose red thermostat wires and disconnect. Install 18 gauge (see wiring diagram) or heavier wire through the grill in the back, from the stove to the thermostat. Connect thermostat wires to red wires provided.
3. To set the thermostat jumper to the desired mode.

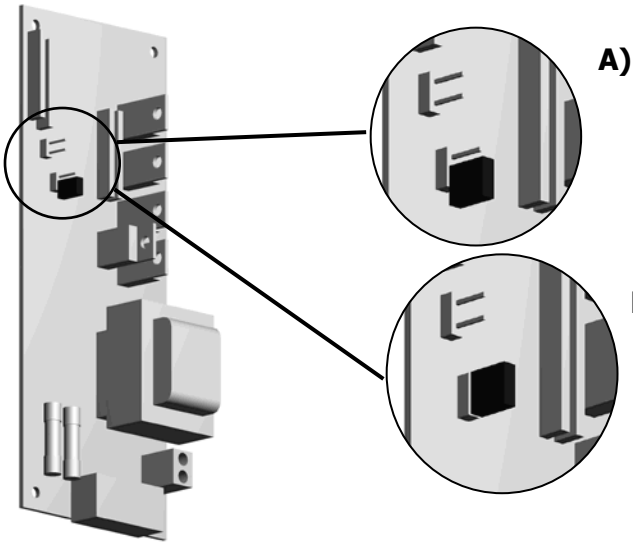

A) HI / LOW: when the jumper is placed on only one of the J9 pins, then the control board is in a HI / LOW mode of thermostat operation (factory setting).

B) ON / OFF: If both pins of J9 are jumped (covered) then the control board is in an ON / OFF mode of thermostat operation.

Figure 7

Turning Stove On Without Thermostat:

Ensure the hopper has sufficient fuel or pellets to start the unit.

1. Press the ON / OFF button (3) to start the appliance. System light (4) will flash, auger light (6) will flash with the pulse of the auger.
2. If this is the first time the unit has been started or the unit has run out of fuel, press the Manual Auger Feed button (5) and hold down for 60 seconds. This will help "prime the auger," deliver fuel to the burn pot, and help light the unit more quickly.

When a fire has been established, the system light will become solid and the auger light will continue to flash. The heat output button (2) can be pressed to achieve the desired heat setting.

Slider/Damper Set-Up:

This is used to regulate the airflow through the pellet stove.

The slider damper is located behind the left side panel. To open the left side panel, undo the one screw located in the upper front corner of the cabinet side between the louvers and one screw behind the ash door. Also loosen three screws down the back of the side panel.

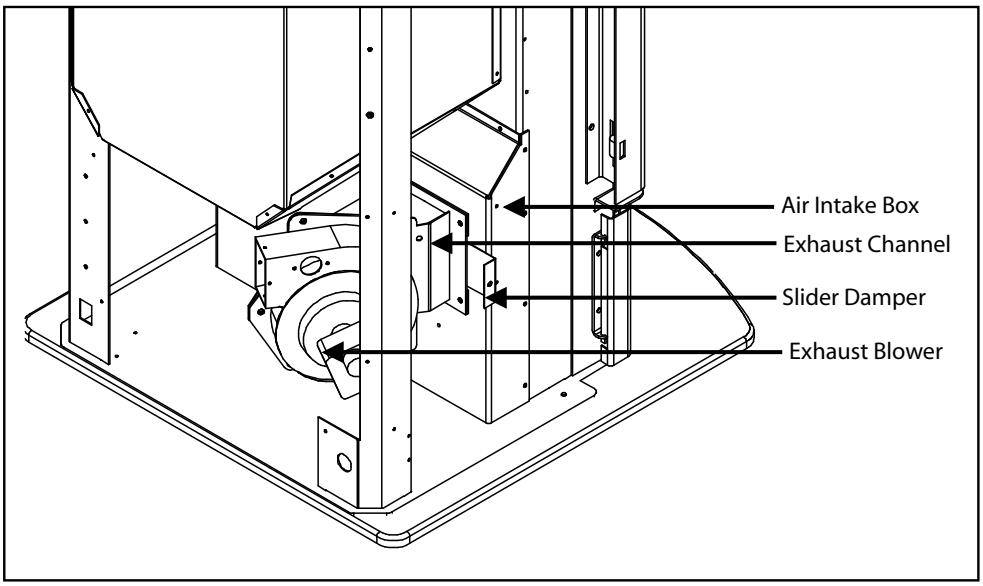

Figure 8

The combustion exhaust blower is a variable speed blower controlled by the heat output setting. This blower will decrease the vacuum pressure inside the stove and as the heat output button is turned down. The vacuum pressure inside the firebox will increase as the combustion exhaust blower increases in speed (higher heat output setting).

If the fire should happen to go out and the heat output indicator has been set on the lowest setting, the Slider Damper may need to be pushed in slightly, decreasing the air in the firebox.

If, after long periods of burning, the fire builds up and over flows the burn pot or there is a build up of clinkers, this would be a sign that the pellet quality is poor and the slider damper must be pulled out to compensate, letting more air in the firebox.

Pulling the slider damper out gives the fire more air.

The easiest way to make sure that an efficient flame is achieved is to see the characteristics of the fire.

- A tall and lazy flame with dark orange tips requires more air – Open slider / damper out.
- A short and brisk flame, like a blowtorch, has too much air – Close slider / damper in.
- If the flame is in the middle of these two characteristics with a bright yellow/orange, active flame then the air is set for proper operation.

SPECIAL NOTES:

Pellet quality is a major factor in how the Pellet stove will operate. If the Pellets have a high moisture content or ash content the fire will be less efficient and has a higher possibility of the fire building up and creating clinkers (hard ash build-up).

Routine Cleaning and Maintenance

The following list of components should be inspected and maintained routinely to ensure that the appliance is operating at its' optimum and giving you excellent heat value:

2-3 DAYS/WEEKLY	SEASON or 2 TONS OF FUEL
Burn Pot and Liner	Exhaust Vent
Ash Pan	Fresh Air Intake Tube
Inside Firebox	Blower Mechanisms
Door Glass	Heat Exchanger Tubes
Heat Exchanger Tubes	Behind Firebox Liners
Ash Pan and Door Gaskets	All Hinges
Door Latch	Post Season Clean-up

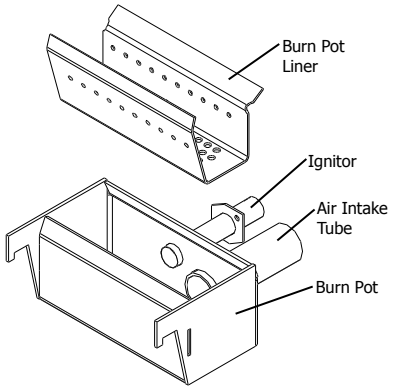

Figure 9

TOOLS REQUIRED TO CLEAN UNIT:

Torx T-20 Screwdriver, 5/16" wrench or socket, Brush, Soft Cloth, Vacuum with fine filter bag

WARNING: The vacuum must have a fine particle filter to prevent damage to the vacuum or discharge of dust into the room.

ASH PAN AND DOOR GASKETS

After excessive use the gasketing may come loose. To repair this, glue the gasketing on using high-temperature fiberglass gasket glue available from your local dealer. This is important to maintain an airtight assembly.

DO NOT PLACE UNBURNED OR RAW PELLET FUEL IN ASH PAN.

BURNER POT AND LINER

This is the 'pot' where the pellets are burned. Every two to three days (when the unit is cold), remove the burn-pot liner from the stove. Using a metal scrapper, remove material that has accumulated or is clogging the liner's holes. Then dispose of the scrapped ashes from the liner and from inside the burn-pot. Place the burn-pot back into the stove, making sure that the pipes are properly inserted into the burn pot. Place the liner back into the burn-pot, making sure that the ignitor hole in the liner is aligned with the ignitor tube. Pushing the liner up against the ignitor tube.

To remove the burn pot and burn pot liner, open the door using the door handle provided (located on the right-hand side of the stove). Swing the door open. Lift the liner from the burn pot. Lift the burn pot from the firebox by gently lifting up the front of the burn pot, then sliding the assembly from the air intake tube and the ignitor.

ASH PAN:

This part is located under the burner, in the pedestal, and has a latching mechanism to secure it. To remove the ash pan, open the cover from the right hand side, unlock the latch on the pedestal cover and pull the pan out. Dump the ashes into a metal container stored away from combustibles. Monitor the ash level every week. Remember that different pellet fuels will have different ash contents. Ash content is a good indication of fuel efficiency and quality. Refer to "Warnings and Recommendations" for disposal of ashes.

DO NOT PLACE UNBURNED OR RAW PELLET FUEL IN ASH PAN.

Routine Cleaning and Maintenance

DOOR GLASS

(It is recommended that your dealer replace the glass if broken.)

The door glass is made of high temperature PYRO CERAMIC. The center panel is 14" x 14" inches (35.5 cm x 35.5 cm). To replace the glass, unscrew and remove the four glass retainers. Remove the glass and any broken pieces. High temperature fiberglass tape should be used around the glass. Replace the glass by securing the glass retainers back to the frame.

FRESH AIR INTAKE

Inspect periodically to be sure that it is not clogged with any foreign materials.

EXHAUST PASSAGES

When the unit is cold open the door, remove the burn pot liner (refer to "Routine Cleaning and Maintenance - Burner Pot and Liner" to clean the burn pot liner) and vacuum the inside of the firebox thoroughly. Replace burn pot liner and close the door.

Open the pedestal door, and slide the ash pan out of the pedestal (refer to "Routine Cleaning and Maintenance - Ash Pan" to clean the ash pan). Vacuum the inside of the ash pan compartment inside the pedestal including the hole at the top back of the compartment. Replace the ash pan and close the pedestal door.

Remove the left cabinet side then remove the exhaust motor from the blower housing. Vacuum the exhaust channel. Reinstall the exhaust motor and replace the cabinet side.

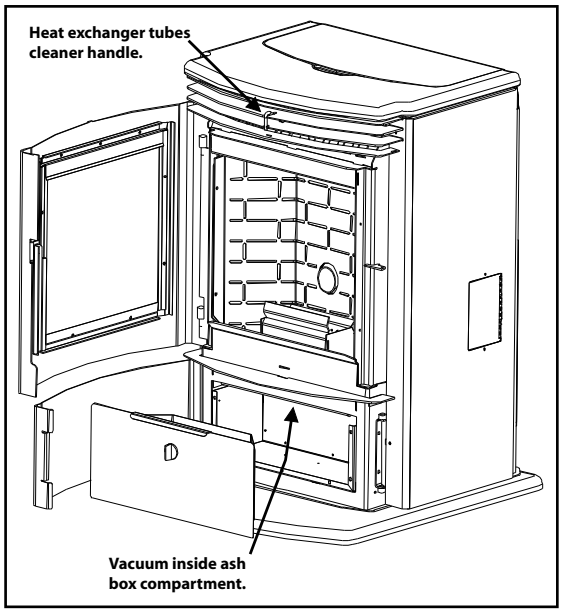

Figure 10

EXHAUST VENT

This vent should be cleaned every year or after two tons of pellets. We recommend contacting your dealer for professional cleaning. To clean the vent pipe, tap lightly on the pipe to dislodge any loose ash. Open the bottom of the "T" to dump the ash, then vacuum as much of the ash out of the vent pipe as possible.

HEAT EXCHANGER TUBES

A handle is located under the unit top (see figure above), in the center of the stove just above the door. This handle is to be pulled up and down a few times (ONLY WHEN THE UNIT IS COLD) in order to clean away any fly ash that may have collected on the heat exchanger tubes. As different types of pellets produce different amounts of ash, cleaning of the tubes should be done on a regular basis to enable the unit to run efficiently.

POST SEASON CLEAN-UP

Once you are finished using the pellet appliance for the season, unplug the stove for added electrical protection. It is very important that the stove be cleaned and serviced as stated above.

Installation

Deciding Where To Locate Your Pellet Stove:

1. Check clearances to combustibles.
2. Do not obtain combustion air from an attic, garage or any unventilated space. Combustion air may be obtained from a ventilated crawlspace.
3. Do not install the stove in a bedroom.
4. You can vent the stove through an exterior wall behind the unit or connect it to an existing masonry or metal chimney (must be lined if the chimney is over 6 inch diameter, or over 28 inches² cross sectional area). An interior vent can be used with approved pipe passing through the ceiling and roof.
5. Locate the stove in a large and open room that is centrally located in the house. This will optimize heat circulation.
6. The power cord is 8 feet (2.43 m) long and may require a grounded extension cord to reach the nearest electrical outlet.

Removing Your Pellet Stove From The Pallet:

To remove your new stove from its pallet, open the left and right side panels. There are two wood screws that are holding the bottom of the stove to the pallet. Remove the screws. Close the side panels.

To remove the right and left hand cabinet sides there are three T-20 Torx screws on the back of the panel; loosen these screws only.

Remove the one screw located on the front of the cabinet side, behind the top louvers.

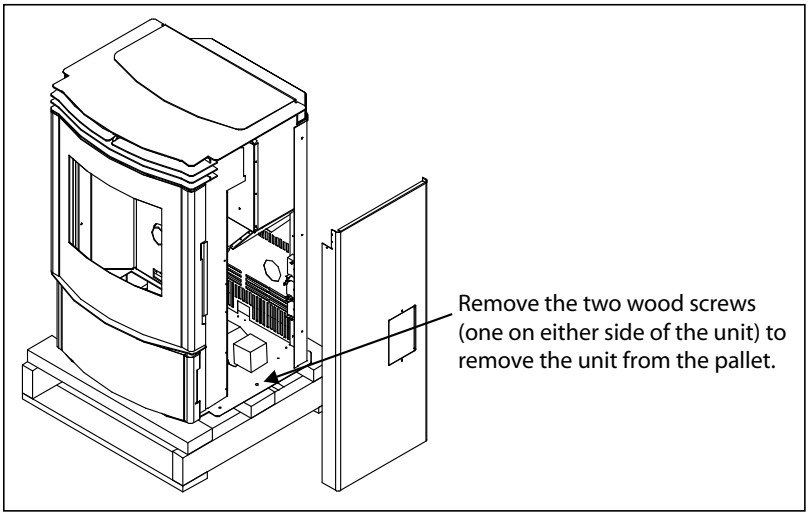

Figure 11

Optional Slider/Damper Rod Installation:

If you wish to adjust the slider damper externally (NOT REQUIRED), please follow the instructions below

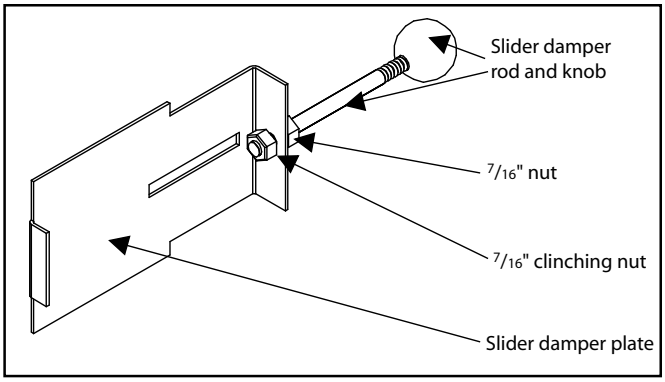

Figure 12

1. To install the OPTIONAL slider damper rod, remove the left cabinet side and locate the slider damper plate. Install the 7/16" nut unto the slider damper rod, thread all the way to the end of the threads on rod.
2. Slide rod through the hole in the slider damper plate and install the 7/16" clinching nut onto the rod and tighten completely onto the slider damper plate.
3. Reinstall the cabinet side. Install the black knob on the end of the rod. Check slider damper for smooth operation.

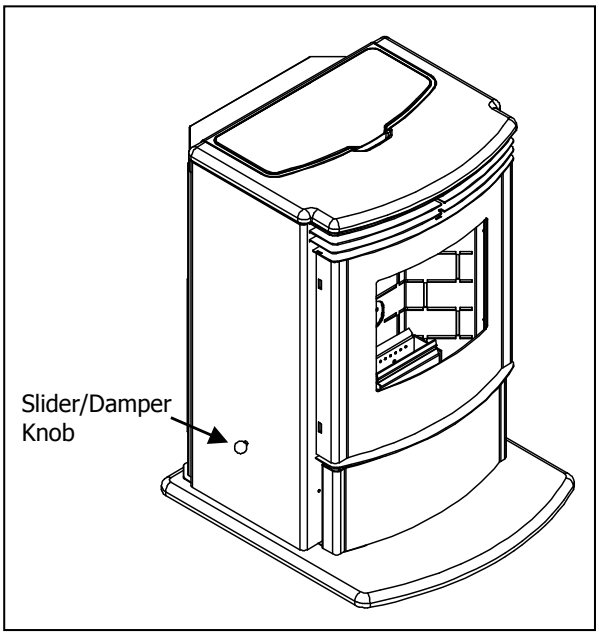

Figure 13

Optional Hearth Pad Pedestal Installation:

This unit can be installed on a combustible floor due to the optional pedestal hearth pad (for example linoleum, hardwood flooring). If this unit is to be installed onto a carpeted surface, a hearth pad must be used for stability.

Carefully place the back of the pellet appliance on the pallet and install the hearth pad. Align the holes in the hearth pad and the unit and install the four screws provided.

This unit is supplied with 4 leveling legs for uneven surfaces. Adjust these leveling legs until unit is level.

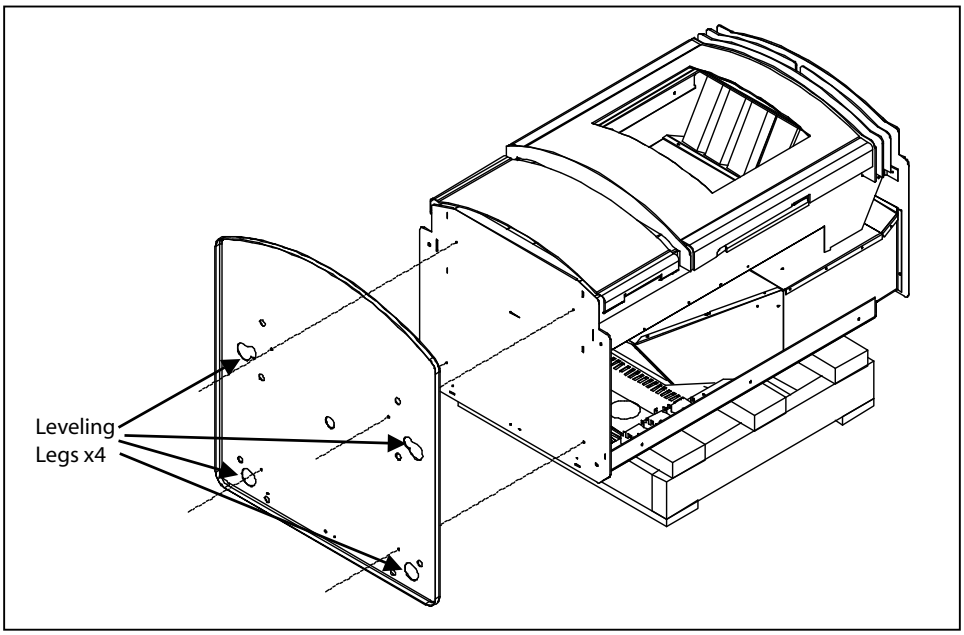

Figure 14

VENT TERMINATION REQUIREMENTS:

1. Do not terminate the vent in any enclosed or semi-enclosed areas such as a carport, garage, attic, crawlspace, narrow walkway, closely fenced area, under a sun deck or porch, or any location that can build up a concentration of fumes such as stairwells, covered breezeway, etc.
2. Vent surfaces can become hot enough to cause burns if touched by children. Non-combustible shielding or guards may be required.
3. Termination must exhaust above the inlet elevation. It is recommended that at least five feet of vertical pipe be installed outside when the appliance is vented directly through a wall, to create some natural draft to prevent the possibility of smoke or odor during appliance shut down or power failure. This will keep exhaust from causing a nuisance or hazard from exposing people or shrubs to high temperatures. In any case, the safest and preferred venting method is to extend the vent through the roof vertically.
4. Vent terminal cannot be:
   - less than 4 feet (1.2 m) below
   - less than 4 feet (1.2 m) horizontally from, and
   - less than 1 foot (305 mm) above doors, window openings, or gravity/ventilation air inlet into building
5. Distance from bottom termination and grade –12" (305 mm) minimum. This is conditional upon the plants and nature of grade surface. The exhaust gases are hot enough to ignite grass, plants and shrubs located in the vicinity of termination. The grade surface must not be lawn. Distance from bottom of termination and public walkways is 7 feet (2.1 m) minimum.
6. Distance to combustible materials is 2 feet (610 mm). This includes adjacent buildings, fences, protruding parts of the structure, roof overhang, plants, shrubs, etc.
7. If the unit is incorrectly vented or the air to fuel mixture is out of balance, a slight discoloration of the exterior of the house might occur. Since these factors are beyond Sherwood Industries Ltd's. control, we grant no guarantee against such incidents.

IT IS RECOMMENDED THAT AN AUTHORIZED DEALER/INSTALLER INSTALL YOUR PELLET STOVE

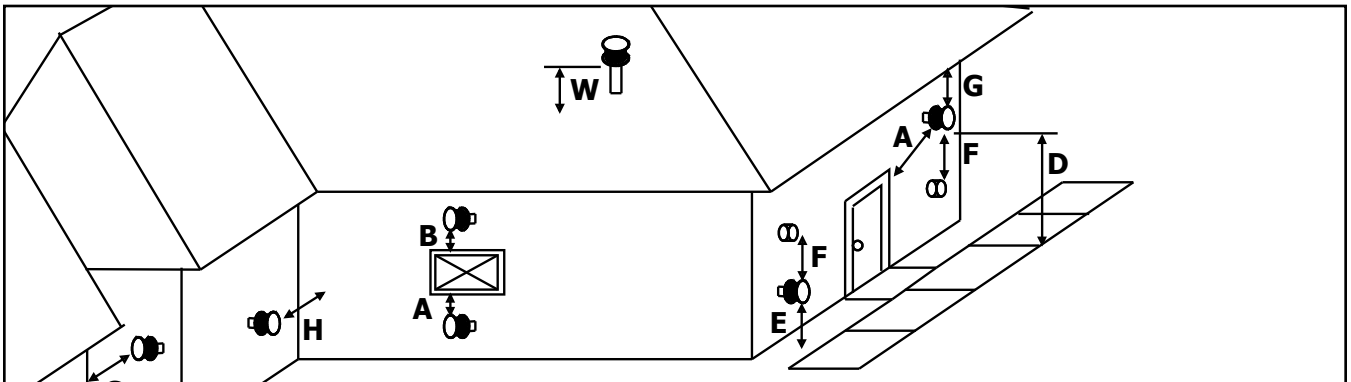

NOTE: Measure clearance to the nearest edge of the exhaust hood

A- MINIMUM 4 feet (1.2 m) below or beside any door or window that opens.
B- MINIMUM 1 foot (305 mm) above any door or window that opens.
C- MINIMUM 2 feet (610 mm) from any adjacent buildings.
D- MINIMUM 7 feet (2.1 m) above grade when adjacent to public walkways.
(NOTE) Vent may not terminate in a covered walkway or breezeway.
E- MINIMUM 2 feet (610 mm) above plants, grass or other combustible materials.
F- MINIMUM 3 feet (915 mm) from any forced air intake of other appliances.
G- MINIMUM 2 feet (610 mm) below any eave or roof overhangs.
H- MINIMUM 1 foot (305 mm) clearance to a combustible wall.
W- MINIMUM 2 feet (610 mm) above the roof.

Figure 15

Installation

Horizontal Trough Wall Installation:

The **ENVIRO Evolution (EF5)** can be vented through the wall using two different methods.

It is recommended that the installation has some vertical rise in the system.

STRAIGHT THROUGH THE WALL

1. Choose a location for your stove that meets the requirements stated in this manual and allows installation with the least amount of interference to house framing, plumbing, wiring, etc.
2. Place the appliance 15" (37.5 cm) away from the wall. If the stove is to be set on a hearth pad, set the unit on it.
3. Locate the center of the exhaust pipe on the stove. Extend that line to the wall. Once you have located the center point on the wall, use a hole saw to cut a 10" (254 mm) diameter hole for a 3" (76 mm) vent pipe or an 11" (279 mm) hole for a 4" (101 mm) vent pipe.
4. Install the wall thimble as per the instructions written on the thimble.
5. Install a length of 3" (76 mm) or 4" (101 mm) vent pipe into the wall thimble. The pipe should install easily into the thimble.
6. Install the fresh air intake.
7. Connect the exhaust vent pipe to the exhaust pipe on the stove. Seal all connections with high temperature silicone.
8. Push the stove straight back, leaving a minimum of 2" (5 cm) clearance from the back of the stove to the wall. Seal the vent pipe to the thimble with high temperature silicone.
9. The pipe must extend at least 12"(30 cm) away from the building. If necessary, bring another length of pipe (PL type) to the outside of the home to connect to the first section. Do not forget to place high temperature silicone around the pipe that passes through the thimble.
10. Install a vertical pipe, or if all requirements for direct venting are met, install vent termination. The stainless steel cap termination manufactured by the vent manufacturer is recommended. However, when the vent terminates several feet above ground level and there are no trees, plants, etc. within several feet, a 45° elbow with rodent screen can be used as a termination. The elbow must be turned down to prevent rain from entering.

NOTE:

Some horizontal-through-wall installations may require a "T" and a 3 to 5 foot of vertical pipe outside the building to help natural draft in the unit.

This may be required if a proper burn cannot be maintained, after the stove has been tested and the airflow set.

This is due to the backpressure in the exhaust caused by airflow around the structure.

Straight Through Wall Installation:

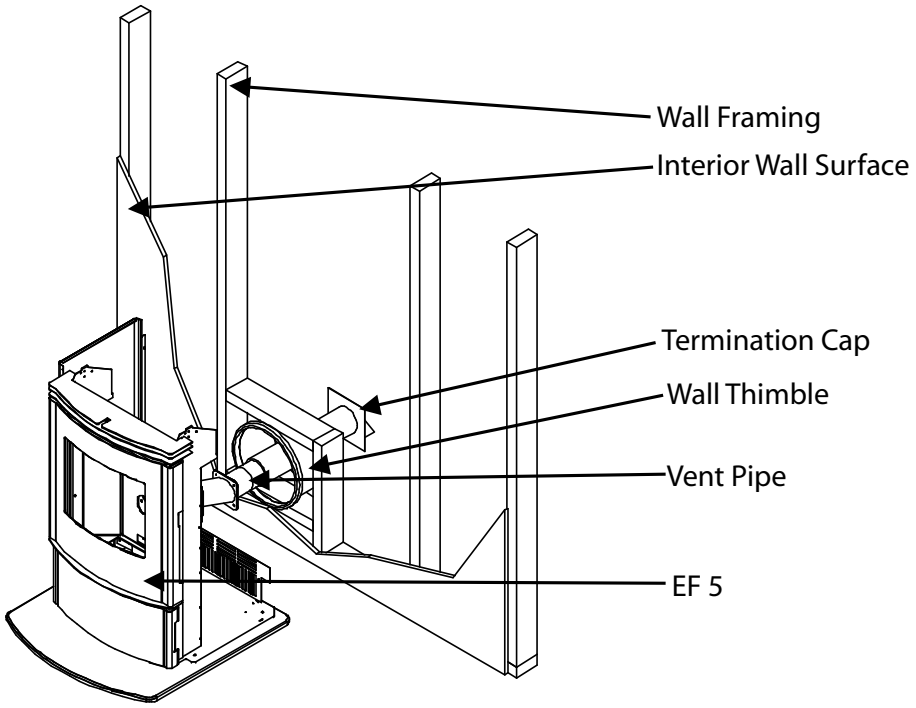

Figure 16

Through Wall With A Vertical Rise (Recommended):

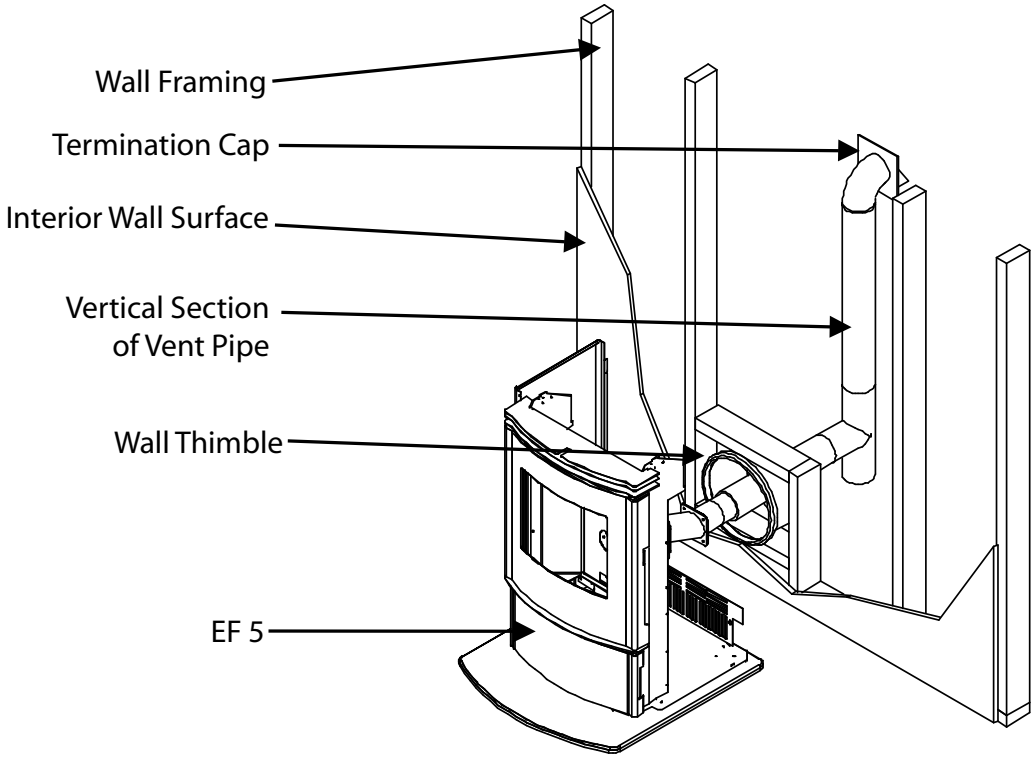

Figure 17

Vertical Installation:

1. Choose a stove location that is ideal. See the section "Deciding Where to Locate Your Pellet Stove".
2. Place the unit on the hearth pad (if installed on a carpeted surface) and space the unit in such a manner that when the pellet vent is installed vertically, it will be 3" (76 mm) away from a combustible wall.
3. Locate the center of the fresh air intake pipe on the unit. Match that center with the same point on the wall and cut a hole about 2⅛ (53.9 mm) in diameter.
4. Install the fresh air intake pipe.
5. Install the tee with clean out.
6. Install the pellet vent upward from there. When you reach the ceiling, make sure that the vent goes through the ceiling fire stop. Maintain a 3" (76 mm) distance to combustibles and keep attic insulation away from the pipe.
7. Finally, extend the pellet vent to go through the roof flashing.
8. Ensure that the rain cap is approximately 36" (900 mm) above the roof.
9. The same methods apply for vertical installation outside. Install wall thimble and pipe supports.

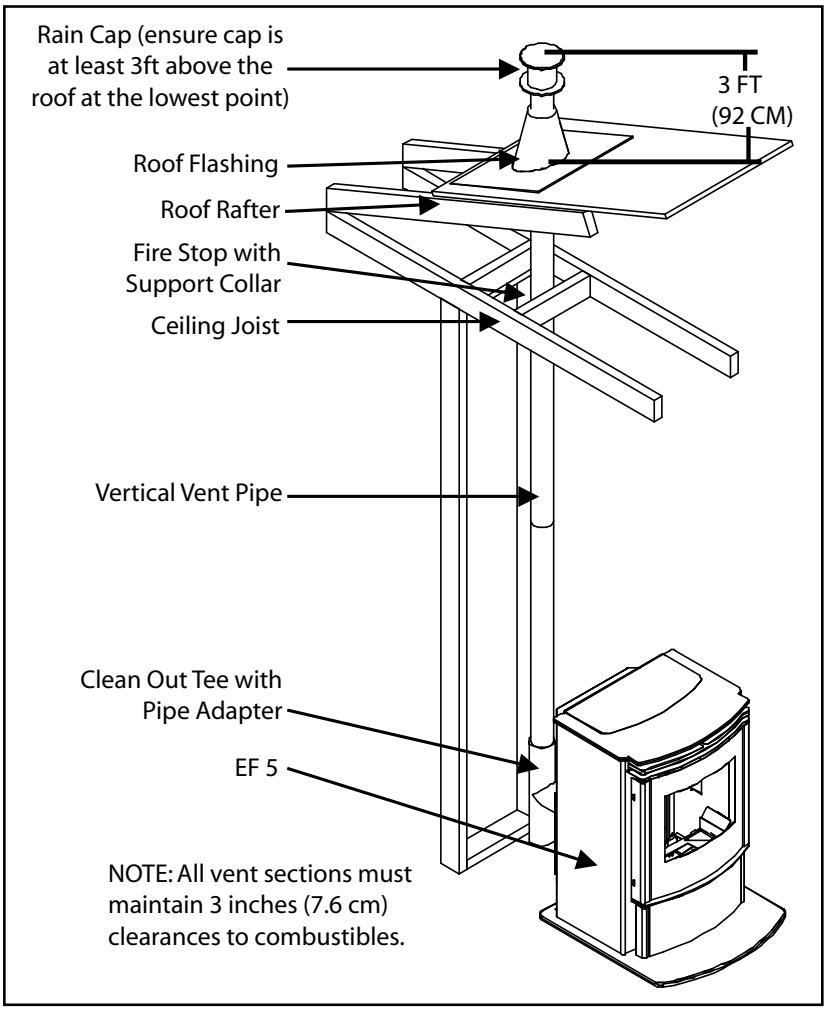

Figure 18

Hearth Mount Installation:

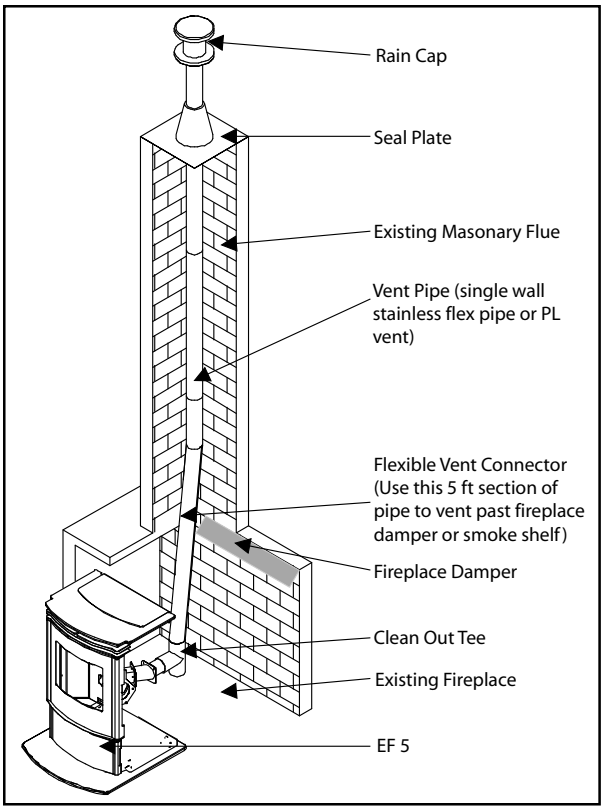

Figure 19

1. Lock fireplace damper in the open position.
2. Install positive flue connector at the fireplace dampers.
3. Connect a Tee or a 90° degree elbow to the exhaust pipe.
4. Install flexible stainless steel liner or listed pellet vent to the top of the chimney.

Through Concrete Wall With Vertical Rise Installations:

A 45° elbow with a rodent screen may be used in place of the termination cap (or stainless steel termination hood).

Installation to use if there is a concrete or retaining wall in line with exhaust vent on pellet stove.

The termination must be 12 inches (30 cm) from the outside wall and 12 inches (30 cm) above the ground.

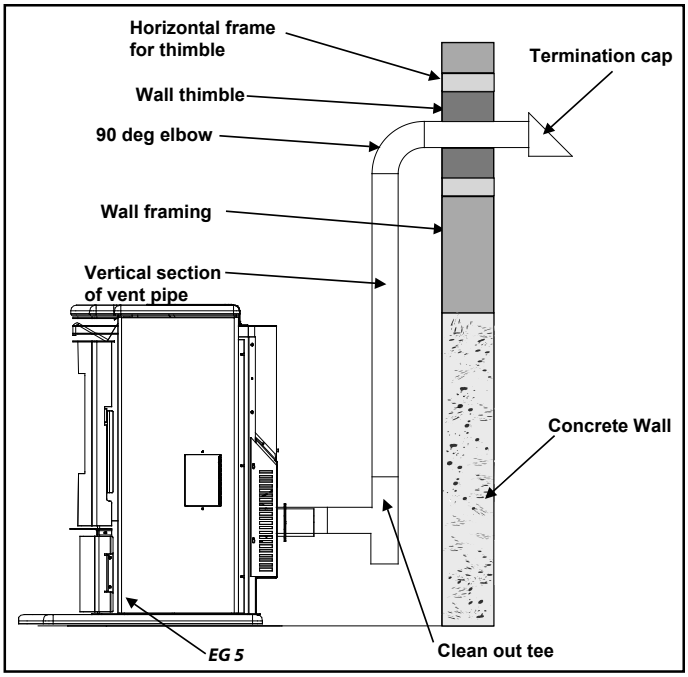

Figure 20

Optional Exterior Mounted Exhaust Blower:

The EF 5 can be equipped with an externally mounted exhaust blower. This optional kit includes all components necessary to install the exhaust blower on any vertical wall surface.

Choose a location for your stove that meets the requirements stated in your manual and allows installation with the least amount of interference with house framing, plumbing, wiring, etc.

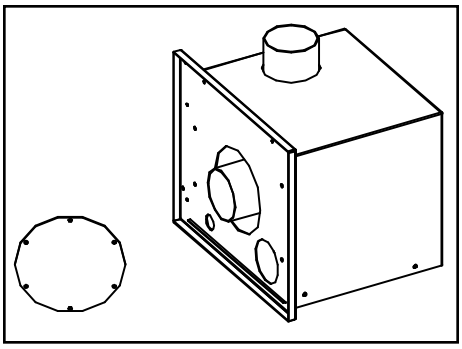

Figure 21

Included in the Exterior Mounted Exhaust Blower Kit are:

1 - Exhaust blower housing box.

1 - Blower cover plate.

1 - Hardware bag

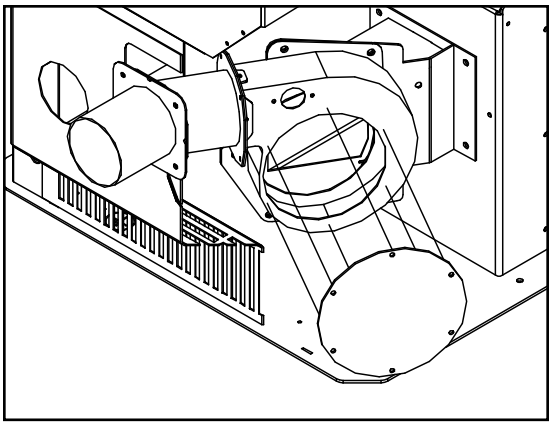

Figure 22

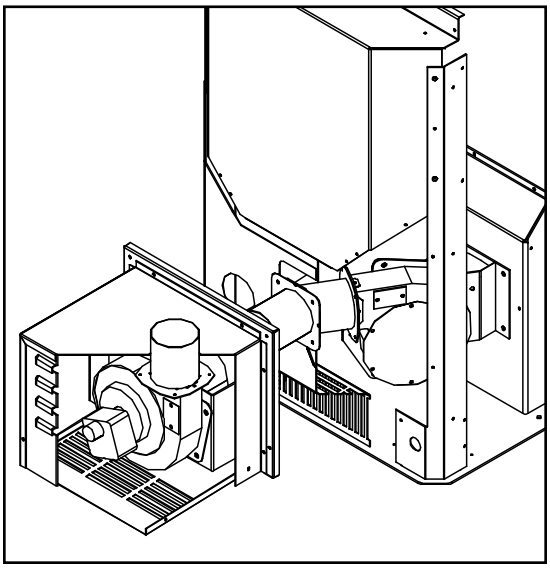

Figure 23

1. Follow the INSTALLATION INSTRUCTIONS Section – "Horizontal through the wall"
2. Remove the left hand cabinet side by removing the (2) two screws down the front. Loosen the three screws on the back of the cabinet side and remove panel.
3. Loosen the (6) six screws that hold the back grill in place. Lift the back grill off the screws.
4. Disconnect the Exhaust blower wires from the wire harness. Remove the exhaust blower motor from the housing [(6) six screws]. Cover hole in housing with cover plate provided.
5. Remove the cover from the exhaust blower housing box.
6. Install the exhaust blower housing box into the pipe placed through the wall thimble, seal with high temp. silicone. Fasten the box to the wall with (4) four screws, seal edges of box to wall with clear silicone.
7. Drill a hole through the wall thimble for the electrical wires. Pass the armored cable through the wall thimble. Use the strain relief provided.
8. Install the Exhaust Blower motor into the external exhaust blower housing box. Make the electrical connections to the wire harness and exhaust blower.
9. Replace the cover on the Exhaust Box and the back grill of the stove and ensure the screws are tightened down.
10. Install vertical pipe as instructed in appropriate section.

Typical Through Wall Termination Installation With Exhaust Blower:

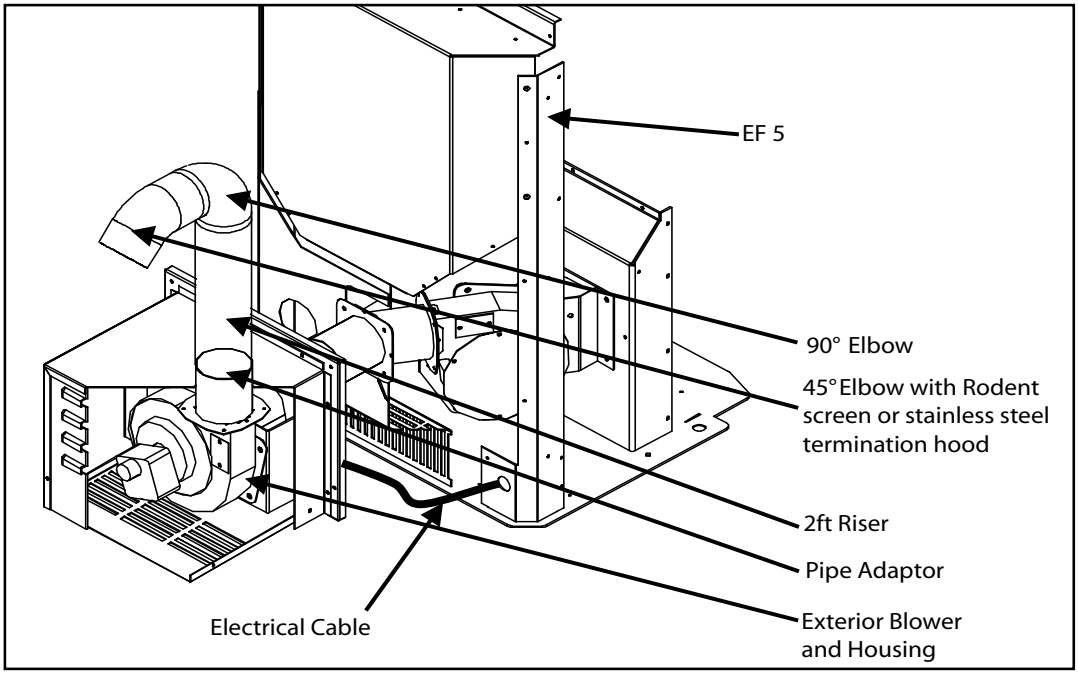

Figure 24

NOTE:

Ensure that all vent connections are installed by placing a small bead of high temperature silicone at each chimney connection.

Also ensure that all vertical vent sections are properly supported and that all clearances to combustibles are maintained in accordance with the vent manufacturer's specifications.

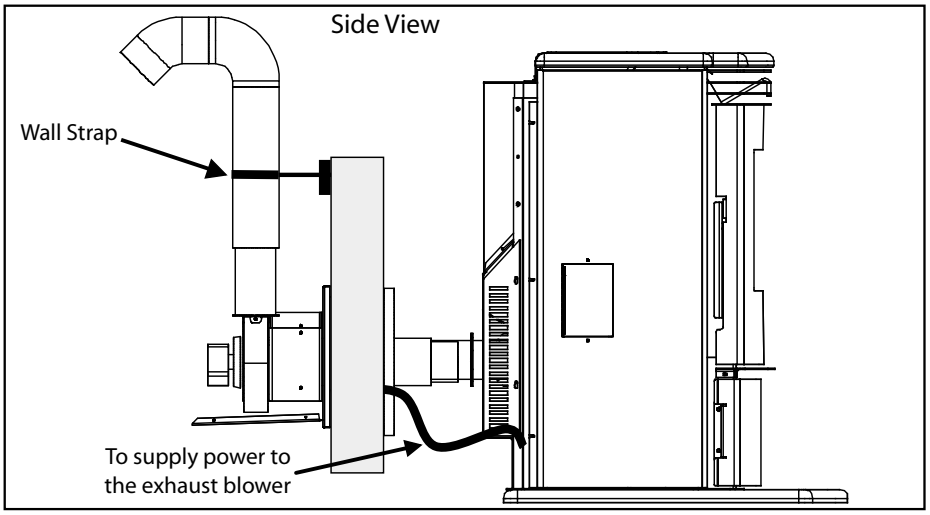

Figure 25

Install an amour coated electrical cable from the exhaust blower housing, through the wall thimble and attach to the pre drilled hole in the left hand rear hopper pillar. Hook up to wires from the exhaust blower wiring harness.

All electrical connections must be in accordance to local code requirements

Through Wall Vertical Installation With Exhaust Blower:

Follow the previous pages for through wall installations. Ensure that vent pipe is properly secured to wall using wall straps. Maintain clearances to combustibles on vent pipe as well as unit.

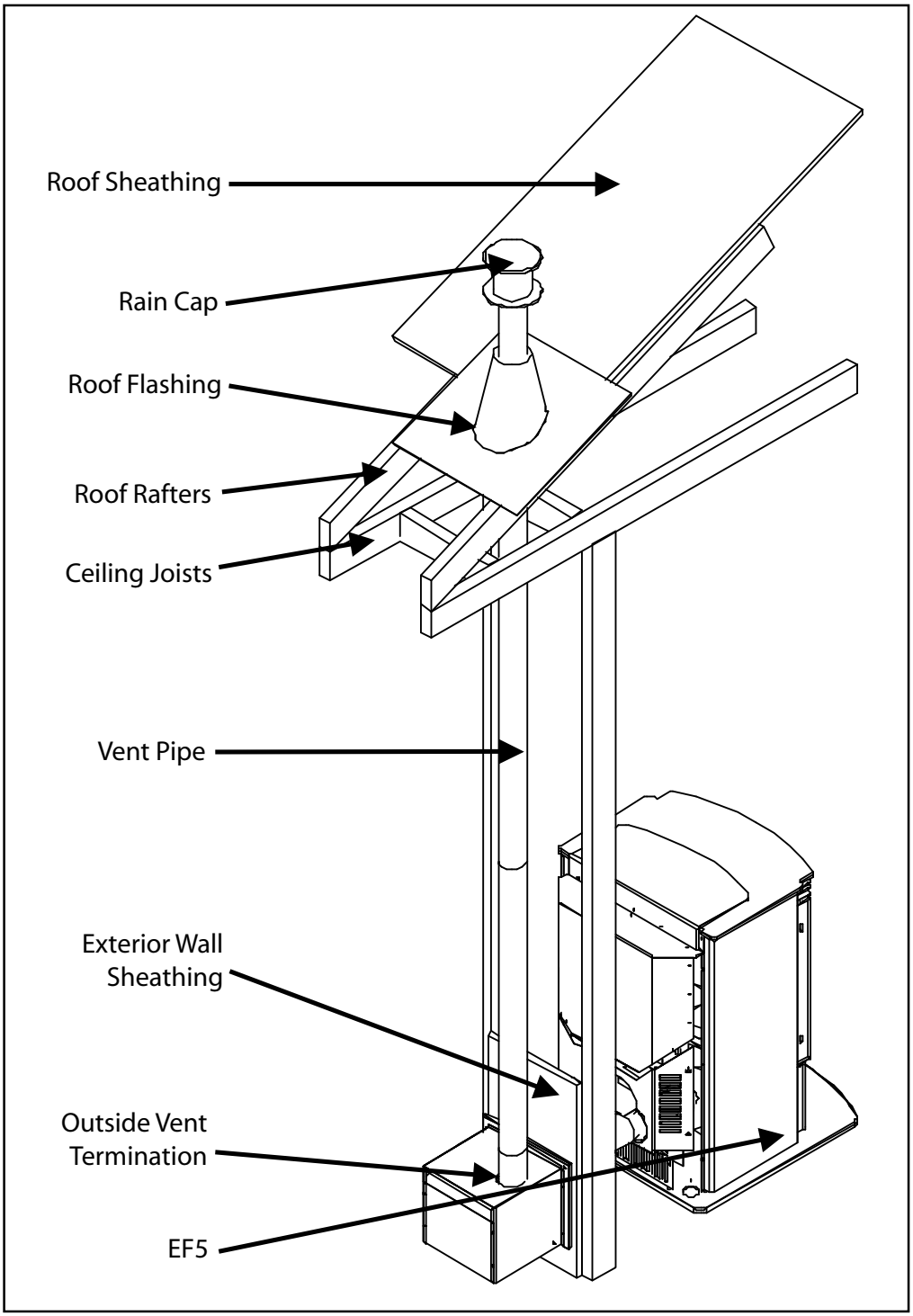

Figure 26

Troubleshooting

DO NOT:

- Service the stove with wet hands. The stove is an electrical appliance, which may pose a shock hazard if handled improperly. Only qualified technicians should deal with possible internal electrical failures.
- Do not remove from the firebox any screws without penetrating oil lubrication.

WHAT TO DO IF:

1. The stove will not start.
2. The stove will not operate when hot.
3. The exhaust blower will not function normally.
4. Light # 2 on Heat output bar flashing.
5. Auger light flashes but auger motor does not turn at all
6. The 200 °F (93 °C) high limit temperature sensor has tripped.
7. The convection blower will not function normally.
8. Igniter- the pellets will not light.
9. Control settings (Heat Level) has no effect on the fire.
10. The stove keeps going out.

***NOTE: All troubleshooting procedures should be carried out by qualified technicians or installers.**

1. The stove will not start.

✓Make sure the stove is plugged in and the wall outlet is supplying power..

✓If the Control Board has been placed in the ON /OFF thermostat mode, then turn the thermostat up to call for heat.

✓Check the Heat Level Indicator. - If the # 2 light is flashing (see the # 2 light is flashing)

✓If the unit still does not start, contact your local service dealer for service.

✓Check the fuses on the circuit board (see "Troubleshooting - Fuses").

2. The stove will not operate when hot.

✓Check the Heat Level Indicator if a fire is not detected, or if the fire has gone out **the #3 light will flash** because the Exhaust Temperature Sensor's contacts have opened.

✓Check the hopper for fuel.

✓Incorrect air damper setting. - Excessive air may consume the fire too quickly before the next drop of fuel, leaving completely unburned fuel in the burn pot liner. - Insufficient air will cause build up, further restricting the air flow through the Burn Pot Liner. This in turn will cause the fuel to burn cold and very slowly. Fuel may build up and smother the fire. **(NOTE: unit may require a change to the vent system or installation of fresh air to correct Air to Fuel ratio problems).**

✓Combustion Blower failure. - The Combustion Blower is not turning fast enough to generate the proper vacuum in the fire box. Visual Check – is the blower motor turning.

✓Check the Exhaust Blower voltage across the blower wires (>=114 V on #5 setting and >= 82 V on #1 setting). – Replace the Circuit Board if the Voltage reading is less than 82 V. with a line voltage >115 VAC.

✓Check Vacuum levels in the exhaust channel by bypassing the Vacuum Switch, then remove the Vacuum hose from Vacuum Switch. Check exhaust vacuum readings by placing the open end of the Vacuum Hose on a Magnahelic Gauge (readings must be above .10" W.C. on low fire).

If the motor fails to reach a 0.10" W.C. readings, then replace the Combustion Blower.

✓Poor Quality Fuel – Insufficient energy in the fuel to produce enough heat to keep the stove burning or operational.
✓Exhaust Temperature Sensor failure. – Bypass sensor located on Exhaust Blower if stove now operates properly, the unit may require cleaning or a new sensor. Contact your local dealer for service.
✓Check the fuses on the circuit board (see "Troubleshooting - Fuses").

3. The exhaust motor will not function normally.
✓Open the left side access panel; check all connections against the wiring diagram.
✓See "2. The stove will not operate when hot." section.

4. Light # 2 on Heat output bar flashing
(The Vacuum Switch contacts have opened for more than 15 sec.)
✓Pinch, break or blockage in Vacuum Hose - Check hose for pinch points or damage, replace or re-route as required. Blow out Vacuum Hose
✓Blocked Hose Barb on Exhaust Channel - Use a paper clip to clean out Hose Barb or remove the Vacuum Hose from the Vacuum Switch and blow into the hose to remove blockage.
✓Blocked exhaust / venting system - Have stove and venting cleaned and inspected.
✓Severe negative pressure in area where unit is installed - Check the operation by opening a window, does this solve the problem? If it does, install fresh air intake to unit or room. Venting system may require vertical section to move termination into a low pressure zone.
✓Vacuum Switch failure - Bypass the vacuum switch, if this corrects the problem check for above problems before replacing the Vacuum Switch.
✓Damage to gray wires between Circuit Board and Vacuum Switch - Inspect wires and connectors
✓Combustion Blower failure - The Combustion Blower is not turning fast enough to generate the proper vacuum in the Exhaust Channel. Visual Check; is the blower motor turning? Check the Exhaust Blower voltage across the blower wires (>=114 V on #5 setting and >= 82 V on #1 setting). – Replace the Circuit Board if the Voltage reading is less than 82 V. with a line voltage >115 V AC.
✓Check Vacuum levels in the exhaust channel by bypassing the vacuum switch, then remove the Vacuum hose from Vacuum Switch. Check exhaust vacuum readings by placing the open end of the Vacuum Hose on a Magnahelic Gauge. (readings must be above .10" W.C. on low fire).
If the motor fails to reach a 0.10" W.C. readings, then replace the Combustion Blower
To reset Circuit Board after a trouble code - push the ON/OFF button

5. Auger light flashes but auger motor does not turn at all.
✓If the Auger gear box does not turn but the motor's armature does try to spin then the auger is jammed. – Try to break apart jam by poking at the jam through the drop tube. If this fails then empty the hopper and remove the Auger Cover **Remember to re-seal the cover after installation**
✓Check the fuses on the circuit board (see "Troubleshooting - Fuses").

6. The 200 °F (93 °C) high limit temperature sensor has tripped.
✓Reset sensor and determine cause – was it Convection Blower failure or 160 °F (71 °C) Temperature Sensor failure? Bypass the 160 °F (71 °C) sensor, does the Convection blower come on high if not replace the blower?
✓Check the fuses on the circuit board (see "Troubleshooting - Fuses").

7. The convection blower will not function normally.

✓Clean all grill openings at the back and below unit .

✓Press the fan button; does the fan come on? Press again to verify that the blower turns on; if, not contact your local dealer for service.

8. Ignitor- the pellets will not light.

✓Everything else in the stove operates but the ignitor will not light the pellets.

✓Make sure the burn pot liner is up tight and square to the ignitor tube by pushing the burn pot back against the ignitor tube.

✓Check to see if the exhaust blower is operating. If not, contact your local dealer for service.

✓Check the fuses on the circuit board (see "Troubleshooting - Fuses").

NOTE: The ignitor should be bright orange in color. If not replace the ignitor.

9. Control settings (Heat Level) has no effect on the fire.

✓NOTE: If the system light is flashing the Control Board has complete control of the unit. When the units system light becomes solid then control of the unit is given back to the operator.

✓If there is no control of the Heat Level button make sure the thermostat is calling for heat.

✓Call your local dealer for service.

10. The stove keeps going out.

If the stove goes out and leaves fresh unburned pellets or cigarette-like ashes in the burn pot liner, the fire is going out before the stove shuts off.

✓Check to see that the Slider / Damper is in the correct position.

✓Turn the Heat Level up slightly (poor quality pellets will require slightly higher settings).

✓Set the auger trim till the #1 and #5 lights are illuminated.

If the stove goes out and there are partially burned pellets left in the burn pot liner, the stove has shut down due to a lack of air, exhaust temperature, or power failure.

✓Adjust the Slider / Damper.

✓Check to see if the stove needs a more complete cleaning.

✓Turn the Heat Level up slightly (poor quality pellets will require slightly higher settings).

✓Did the power go out?

✓Contact your local Dealer for service.

Fuses:

F1 is the fuse to the inside of the circuit board controls. If F1 has blown there may have been an input power overload or a short in the convection fan.

F2 fuse closest fuse to the outside edge of the circuit board controls. If fuse F2 has blown then there was a electrical overload problem with one of the following parts: ignitor, auger motor, high limit switch, or exhaust blower.

Wiring Diagram

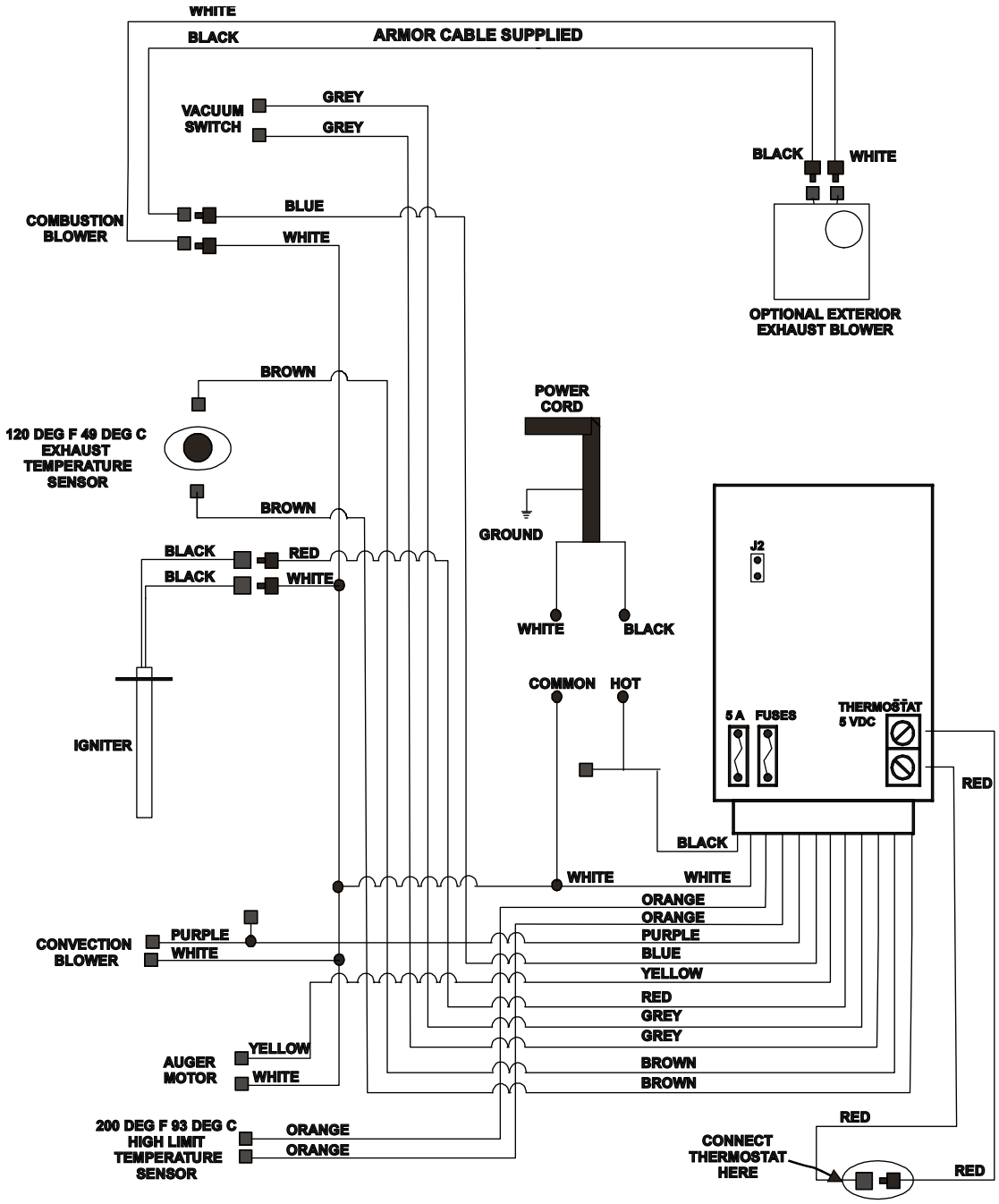

Parts Diagram - Components

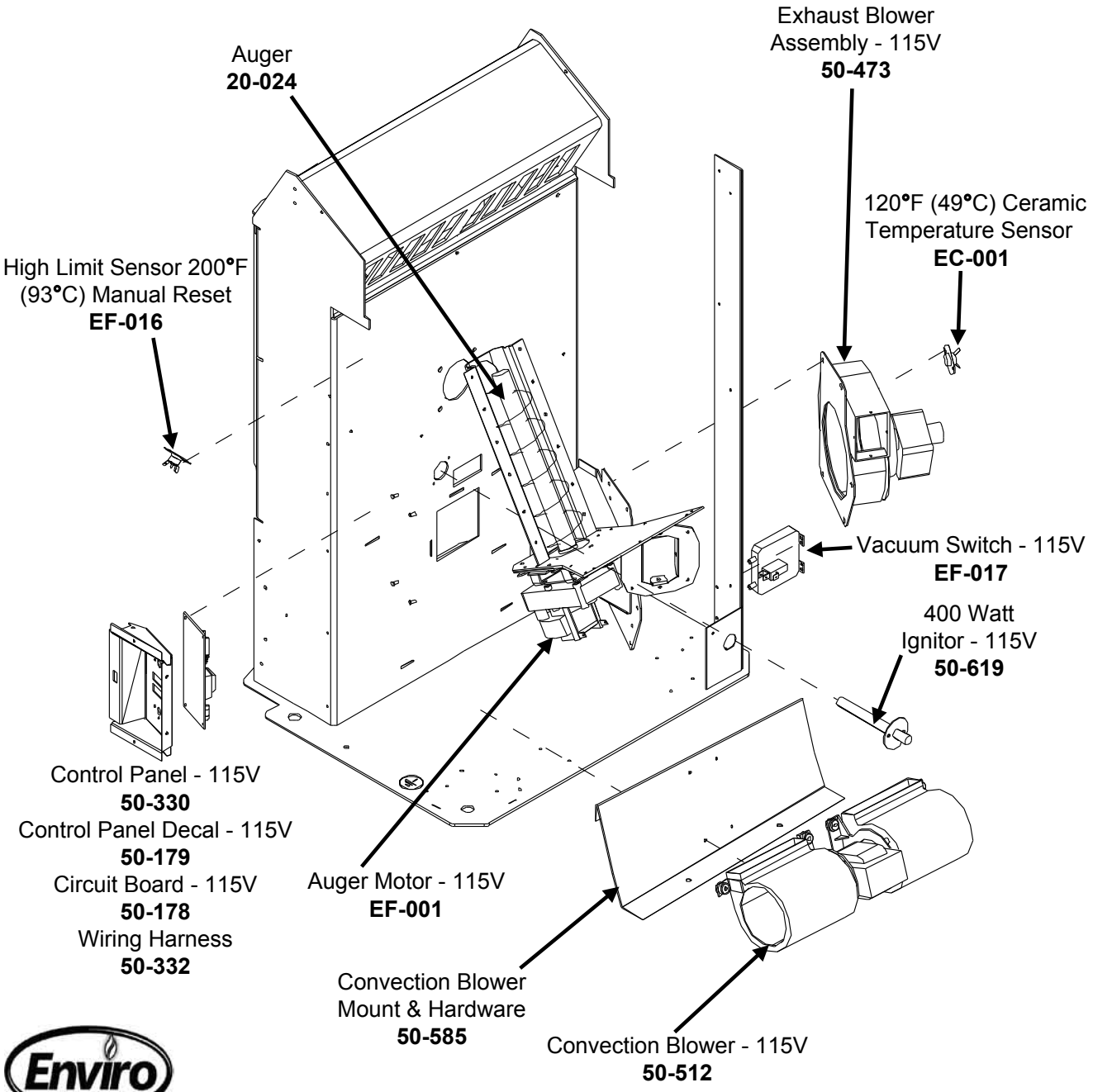

EVOLUTION - Components

April 2003

Parts Diagram - Steel

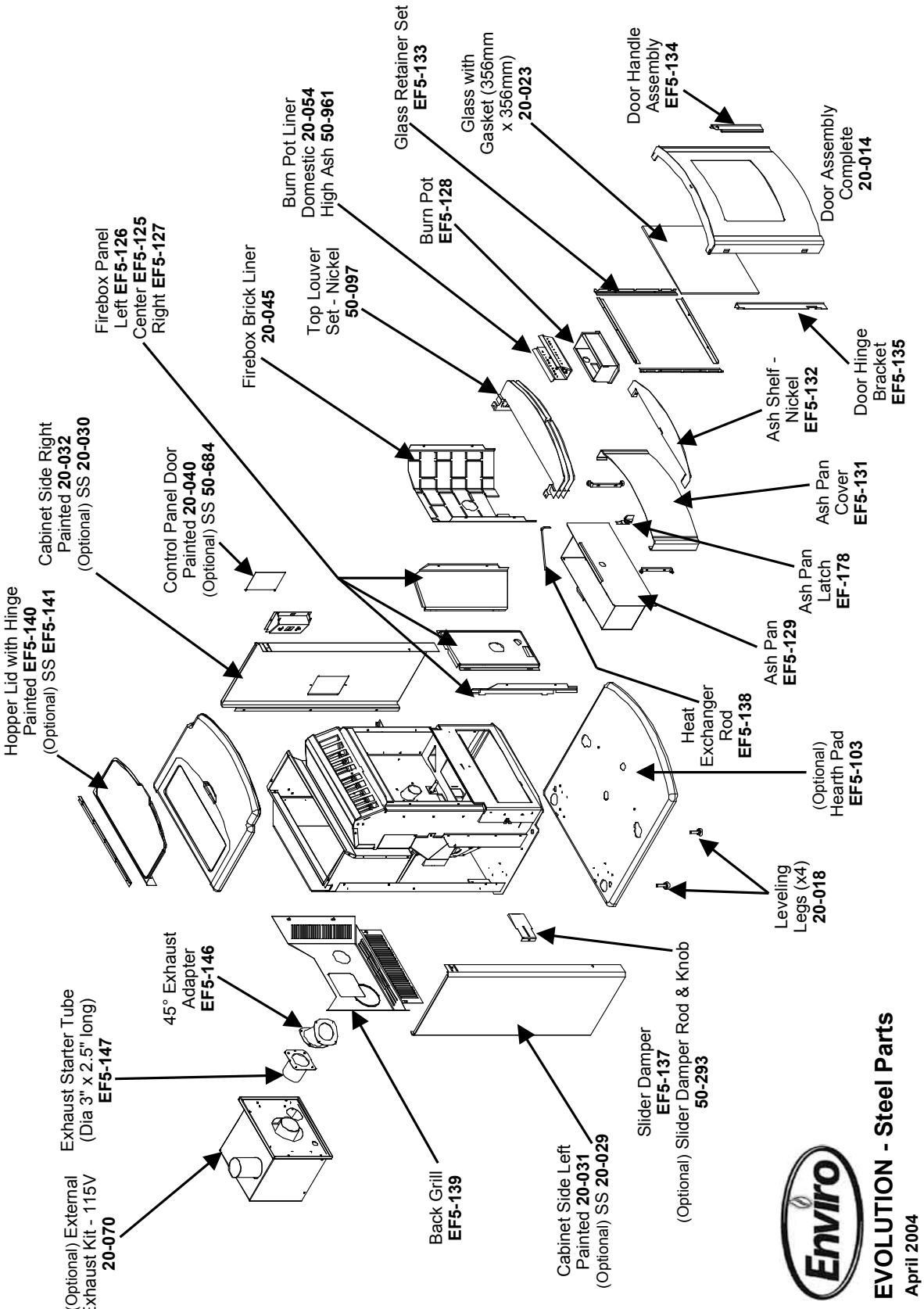

EVOLUTION - Steel Parts

April 2004

Warranty

Sherwood Industries Ltd. gives a five year limited warranty on all steel manufactured parts. A one-year warranty is provided on all electrical components. The above limited warranties are extended only to the original purchaser.

There is no warranty on the following parts:
- Fiberglass rope baskets
- refractory material
- burn pot liner
- paint
- enamel finish or gold plating where it applies
- vacuum hose.

****NOTE:** The paint on the brick firebox lining may peel. This is due to the extreme conditions applied to the paint and is in no way covered under warranty.

WHEN FILING A WARRANTY CLAIM PLEASE COMPLETE THE FOLLOWING INFORMATION ON AN OFFICIAL WARRANTY CLAIM FORM:

TO THE DEALER:

- Name, Address and Telephone Number of purchaser and date of purchase.
- Date of Installation. Name of the installer and dealer. Serial Number of the appliance. Nature of the complaint, defects or malfunction, description and part # of any parts replaced.

TO THE DISTRIBUTOR:

- Sign and verify that work and information are correct.

ENSURE THAT YOU SPECIFY THE NATURE OF THE COMPLAINT, DEFECT, PERIODICAL MALFUNCTION, ETC.

The limited warranty covers defects in materials and workmanship as long as the products has been installed according to the manual's instruction. If the product is damaged or broken as a result of mishandling or misuse, the warranty does not apply. Removal and re-installation costs are not covered under this warranty.

It is the manufacturer's option whether to repair or replace the appliance. The shipping cost to and from the factory is paid by the consumer. All warranties by the manufacturer are set forth herein and no claim shall be made against the manufacturer on any oral warranty or representation.

Sherwood Industries Ltd. assumes no responsibility for damage caused by household power fluctuations or power surges.

Installation Data Sheet

The following information must be recorded by the installer for warranty purposes and future reference.

NAME OF OWNER:

_____

ADDRESS:

_____

_____

_____

PHONE:_____

NAME OF DEALER:

_____

ADDRESS:

_____

_____

_____

PHONE:_____

MODEL:_____

SERIAL NUMBER:_____

DATE OF PURCHASE: _____ (dd/mm/yyyy)

DATE OF INSTALLATION:_____(dd/mm/yyyy)

MAGNEHELIC AT INSTALL:_____

INSTALLER'S SIGNATURE:

_____

NAME OF INSTALLER:

_____

ADDRESS:

_____

_____

_____

PHONE:_____

MANUFACTURED BY:
SHERWOOD INDUSTRIES LTD.
6782 OLDFIELD RD. SAANICHTON, BC, CANADA V8M 2A3
www.envirofire.biz
May 5, 2004
C-10326