SHERWOOD INDUSTRIES IS AN ENVIRONMENTALLY RESPONSIBLE COMPANY. THIS MANUAL IS PRINTED ON RECYCLED PAPER.

PLEASE KEEP THESE INSTRUCTIONS FOR FUTURE REFERENCE

Enviro

FOCUS

BY: SHERWOOD INDUSTRIES LTD

OWNER'S MANUAL

WHAT TO DO IF YOU SMELL GAS

- **Open windows/extinguish any open flame.**
- **Do not try to light any appliance.**
- **Do not touch any electrical switch or use any phone in your building.**
- **Immediately call your gas supplier from a neighbour's phone. Follow the gas supplier's instructions.**
- **If you cannot reach your gas supplier, call the fire department.**

This appliance is only for use with the type of gas indicated on the rating plate. This appliance is not convertible for use with other gases, unless a certified kit is used.

WARNING

If the information in this manual is not followed exactly, a fire or explosion may result causing property damage, personal injury or loss of life. Installation and service must be performed by a qualified installer, service agency or the gas supplier.

FOR YOUR SAFETY

Do not store or use gasoline or other flammable vapours and liquids in the vicinity of this or any other appliance.

INTERTEK C Warnock Hersey US

Massachusetts installations (Warning): This product must be installed by a licensed plumber or gas fitter when installed within the Commonwealth of Massachusetts. Other Massachusetts code requirements: Flexible connector must not be longer than 36in, shut off valve must be a "T" handle gas cock; only direct vent sealed combustion products are approved for bedrooms/bathrooms; fireplace dampers must be removed or welded in the open position prior to the installation of a fireplace insert or gas log.

EG31-118

Safety Precautions

FOR SAFE INSTALLATION AND OPERATION OF YOUR "ENVIRO" HEATER, PLEASE CAREFULLY READ THE FOLLOWING INFORMATION:

- All ENVIRO gas-fired appliances must be installed in accordance with their instructions. Carefully read all the instructions in this manual first. Consult the building authority having jurisdiction to determine the need for a permit prior to commencing the installation.
- **NOTE:** Failure to follow these instructions could cause a malfunction of the fireplace, which could result in death, serious bodily injury, and/or property damage.
- Failure to follow these instructions may also void your fire insurance and/or warranty.

GENERAL

- Installation and repair should be done by a qualified service person. The appliance should be inspected before the first use and, at least, annually by a qualified service person. More frequent cleaning may be required due to excessive lint from carpeting, bedding material, etc. It is imperative the control compartments, burners and circulating air passageways of the appliance be kept clean.
- Due to high temperatures, the appliance should be located out of high traffic areas and away from furniture and draperies.

Children and adults should be alerted to the hazards of high surface temperatures and should stay away to avoid burn or clothing ignition.

- Young children should be carefully supervised when in the same room as the appliance.
- Clothing or other flammable materials should not be placed on or near the appliance.

FOR YOUR SAFETY

- Installation and service must be performed by a qualified installer, service agency or gas supplier.
- This installation must conform to local codes or, in the absence of local codes, to the current CAN/CGA-B149 installation code (Canada) or National Fuel Gas Code ANSI Z223.1.2 (USA)
- To prevent injury, do not allow anyone who is unfamiliar with the stove to operate it.

- **To prevent injury, if the pilot or pilot and burners have gone out on their own, open the glass door and wait 5 minutes to air out before attempting to re-light the stove.**

- Always keep the area around these appliances clear of combustible material, gasoline and other flammable liquids and vapours.
- These appliances should not be used as a drying rack for clothing or for hanging Christmas stockings/ decorations.
- Due to the paint curing on the stove, a faint odor and slight smoking will likely be noticed when the stove is first used. Open a window until the smoking stops.

Always connect this gas stove to a vent system and vent to the outside of the building envelope. Never vent to another room or inside the building. Make sure the specified vent pipe is used; properly sized and of adequate height to provide sufficient draft. Inspect the venting system annually for blockage and signs of deterioration.

WARNING: Failure to position the parts in accordance with the diagrams in this booklet, or failure to use only parts specifically approved with this appliance may result in property damage or personal injury.

WARNING: Do not operate with the glass front removed, cracked or broken. Replacement of the glass should be done by a licensed or qualified service person.

- Never use solid fuels such as wood, paper, cardboard, coal, or any flammable liquids, etc., in this appliance.
- Do not use this heater if any part has been under water. Immediately call a qualified service technician to inspect the heater and to replace any part of the control or gas control systems that have been under water.
- Do not abuse the glass by striking it or slamming the door shut.

Table of Contents

Safety Precautions....2
Table of Contents....3
Codes And Approvals....4
Specifications....5
- Dimensions....5
- Clearances to Combustibles....5
- Rating Label Location....5

Initial Installation....6
- B Vent Model....6
- Automatic Flue Gas Spill Switch....6
- Direct Vent Model....6
- Venting Fireplace Inserts....7
- Direct Vent Restrictor Ring....8
- Adjusting Venturi Air Settings....8
- Preparing Your Focus For Installation....8
- Converting A Direct Vent Fireplace To A B-Vented Fireplace....10
- Converting A B-Vent Fireplace To A Direct Vented Fireplace....10
- Electrical Requirements....11
- Installing Fan Controller....12
- Replacing the Blower....12
- Fuel Conversion....13
- Gas Line Connection....14

Secondary Installation....15
- Log Set and Ember Installation....15
- Removing and Installing The Brick Panel....16

Operating Instructions....17
- Lighting Instructions....17
- Turning Gas Off To Appliance....17

Maintenance And Service....18
Trouble Shooting....19
Parts List - Components....21
Parts Diagram - Body....22
Parts List - Surrounds & Fascia....23
Parts Diagram - Surrounds & Fascia....24
Parts List - Cast....25
Parts Diagram- Cast Bay Front....27
Warranty....28
Installation Data Sheet....29

Codes And Approvals

DIRECT VENT: This type is identified by the suffix DV. This appliance draws all of its air for combustion from outside the dwelling, through a specially designed vent pipe system.
This appliance has been tested and approved for installations from 0 feet to 4500 feet (1372 m) above sea level.

BV: This Vented appliance draws all of its combustion air from the dwelling and must be vented using listed B or L vent. May also be vented through a conventional chimney using a chimney liner kit.
This appliance has been tested and approved for installations from 0 feet to 2000 (610 m) above sea level.

In the USA: The appliance may be installed at higher altitudes. Please refer to your American Gas Association guidelines which state: the sea level rated input of Gas Designed Appliances installed at elevations above 2000 (610 m) feet is to be reduced 4% for each 1000 feet (305 m) above sea level. Refer also to local authorities or codes which have jurisdiction in your area regarding the de-rate guidelines.

In Canada: When the appliance is installed at elevations above 4500 feet (1372 m), the certified high altitude rating shall be reduced at the rate of 4% for each additional 1000 feet (305 m).

- This appliance has been tested by INTERTEK (**Warnock Hersey**) and found to comply with the established VENTED GAS FIREPLACE HEATER standards in CANADA and the USA as follows:

VENTED GAS FIREPLACE HEATER (FOCUS BV/DV; NG/LPG)

TESTED TO: ANSI Z21.88a-2003/CSA 2.33a-2003 VENTED GAS FIREPLACE HEATERS

CAN/CGA 2.17-M91 GAS FIRED APPLIANCES FOR HIGH ALTITUDES

CSA P.4.1-02 TESTING METHOD FOR MEASURING ANNUAL FIREPLACE EFFICIENCY

This ENVIRO FOCUS Fireplace:

- Has been certified for use with either natural or propane gases. (See rating label.)
- Is not for use with solid fuels.
- Is approved for bedroom or bed sitting room. (**IN CANADA**: must be installed with a listed wall thermostat. **IN USA**: see current ANSI Z223.1 for installation instructions.)
- Must be installed in accordance with local codes. If none exist, use current installation code CAN/CGA B149 in Canada or ANSI Z223.1/NFPA 54 in the USA.
- Must be properly connected to an approved venting system and not connected to a chimney flue serving a separate solid-fuel burning appliance.
- Is not approved for closet or recessed installations.
- Must have inner flat unit glass installed before bay window can be installed.

IMPORTANT NOTICE (Regarding first fire up): When the unit is turned on for the first time, it should be turned onto high without the fan on for the first 4 hours. This will cure the paint, logs, gasket material and other products used in the manufacturing process. It is advisable to open a window or door, as the unit will start to smoke and can irritate some people. After the unit has gone through the first burn turn the unit off including the pilot, let the unit get cold then remove the glass door and clean it with a good gas fireplace glass cleaner, available at your local ENVIRO dealer.

NATIONAL FIREPLACE INSTITUTE®

NFI

CERTIFIED

www.nficertified.org

We recommend that our gas hearth products be installed and serviced by professionals who are certified in the U.S. by the National Fireplace Institute® (NFI) as NFI Gas Specialists.

Specifications

WARNING: Operation of this heater when not connected to a properly installed and maintained venting system can result in carbon monoxide (CO) poisoning and possible death.

Dimensions:

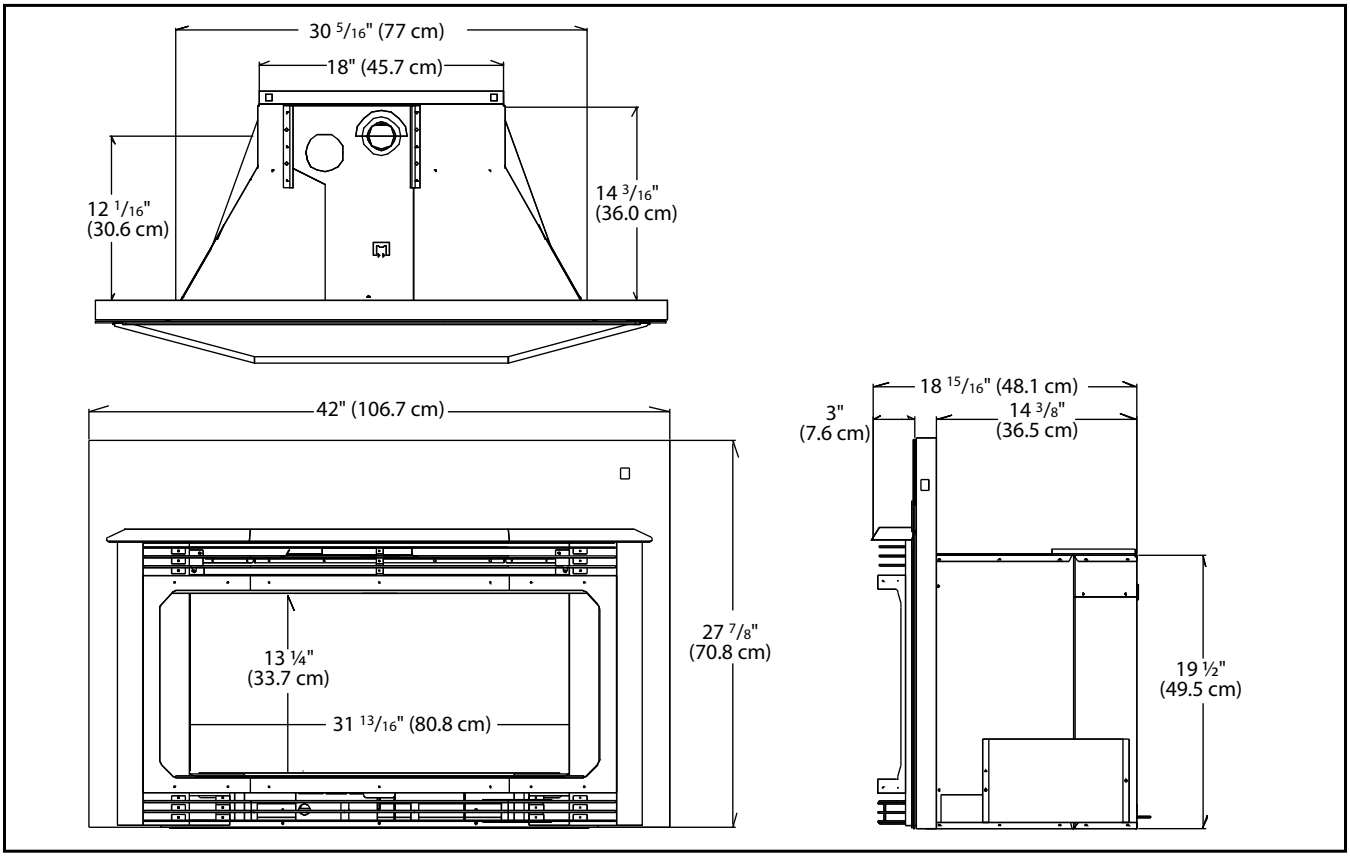

Figure 1: Focus Exterior Dimensions.

Clearances to Combustibles:

Mantle pillar to glass door - 9" (22.8 cm)
From floor to 8" wide mantle - 38" (96.5 cm)
Minimum non-combustible surface in front of unit - 11" (27.9 cm)

Stove must sit on a non-combustible surface. Maintain sufficient clearances for operation, service and maintenance.

Depth of unit into fireplace	16" (41 cm)	
Depth of unit out of fireplace	3" (7.6 cm)	
Minimum fireplace size	Width	34" (86.36 cm)
	Height	21" (53.34 cm)
	Depth	18" (45.72 cm)

Rating Label Location:

The rating label is located under the control panel and is attached to a rectangular metal sheet that is chained to the fireplace.

Initial Installation

WARNING: Operation of this heater when not connected to a properly installed and maintained venting system can result in carbon monoxide (CO) poisoning and possible death.

B Vent Model:

WARNING: This appliance has been designed to operate by drawing combustion air and dilution air from the room. It is also designed to draw room air for proper heat circulation from the sides of the unit. Blocking or modifying the louvers in any way can create hazardous situations, either through poor venting or by overheating. It is important that this unit has sufficient air circulation for proper venting and combustion. Provisions must be made for the supply of adequate combustion and ventilation air. These openings must not be blocked. The appliance must not be connected to a chimney flue servicing a separate solid fuel burning appliance.

Automatic Flue Gas Spill Switch:

NOTE: This heater must be properly connected to a venting system. This heater is equipped with a vent safety shutoff system designed to protect against improper venting of combustion products. This safety switch is located on the rear of the appliance close to the draft hood relief opening. If the switch trips more than once, the venting should be inspected by a qualified service technician for possible blockage or severe down draft conditions.

BV Only: The draft hood must be in the same pressure zone as the air inlet. To inspect draft from the front of the unit, locate the ¼" tube between the louvers and check for a draft using smoke. A vacuum or suction into the tube will indicate proper drafting.

This model can be vented with 4" aluminum or stainless steel flex vent and/or certified Type B Gas Vent. The flue collar of the appliance will fit inside of a standard 4" vent and may be fastened directly to the vent, check periodically that the vent is unrestricted and an adequate draft is present when the unit is in operation.

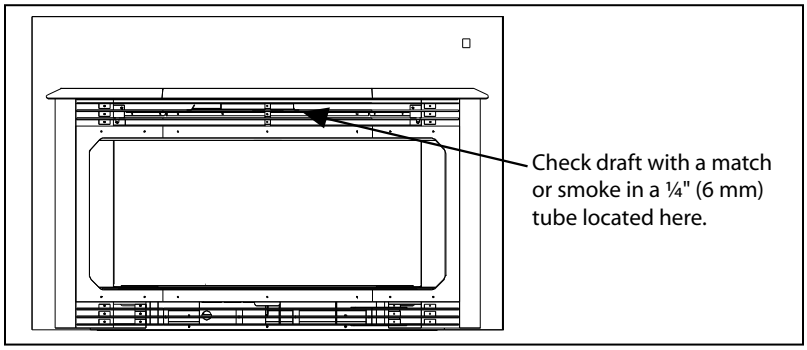

Figure 2: Draft Check.

Direct Vent Model:

WARNING: This appliance has been designed to draw room air for proper heat circulation from the sides of the unit. Blocking or modifying the louvers in any way can create hazardous situations.

This model is vented with TWO (2) 3" aluminum or stainless steel flex vent leading into a co-linear to co-axial vent adaptor and using a Simpson Dura Vent vertical termination cap. The flue collars of this model will fit inside of standard 3" vent and may be fastened directly to the vent. The Exhaust vent is in the center of the flue connector. The Air Intake is on the left side of the vent collar plate (this outlet is not in the center it is off to one side of the vent collar plate.)

Check periodically that the vents are unrestricted. Also ensure that all direct vent pipes have been properly sealed and installed after routine inspection or cleaning. The air intake and exhaust pipes must be installed in the correct locations on the removable draft hood connector.

Initial Installation

QUALIFIED INSTALLERS ONLY

Venting Fireplace Inserts:

The **ENVIRO** FOCUS may be installed and vented into any solid fuel fireplace that has been installed in accordance with the National, Provincial/State and local building codes and has been constructed of non-combustible materials.

An approved chimney liner and rain cap must be used. A throat connector or flashing **must** be installed to ensure a tight seal, top performance, safety and efficiency. Carefully follow the manufacturer's instructions which accompany the chimney liner kit.
Remove the vent collar plate from the top of the insert and connect it securely with sheet metal screws and/or hose clamps. Check for any tears in the liner at this point. (See also Initial Installation Instructions.)

IMPORTANT: The screws that hold the vent collar plate in its approved position must be installed.

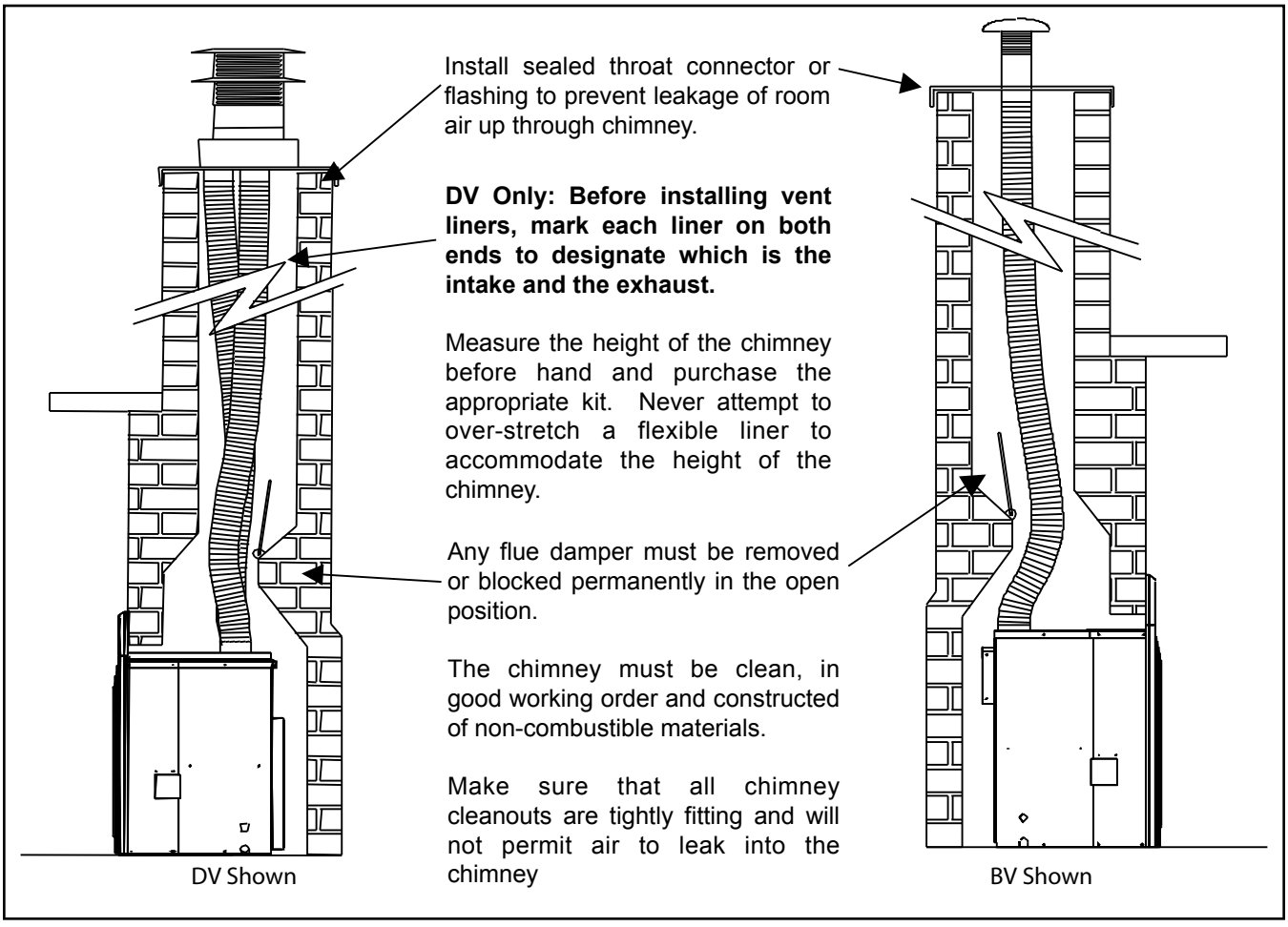

Figure 3: Installation of Focus DV and BV.

Initial Installation

QUALIFIED INSTALLERS ONLY

Direct Vent Restrictor Ring:

DIRECT VENT ONLY: The maximum vertical vent height for a direct vent installation is 25 feet (7.62 m). Use the vent restrictor ring for installations above 15 feet (4.57 m). See Figure 4 for installation of restrictor ring.

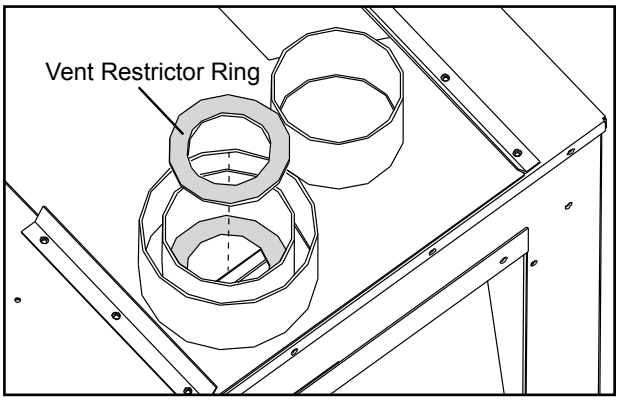

Figure 4: Direct vent restrictor ring installation.

Adjusting Venturi Air Settings:

There is only one venturi and one air shutter to be adjusted.

When installing the burner top, ensure that the venturi tube is engaged to the air shutter adjustment rod.

Use this small venturi adjustment rod to achieve a proper and efficient flame, shown in Figure 5.

Adjust rod until the flame pattern is similar to Figure 22.

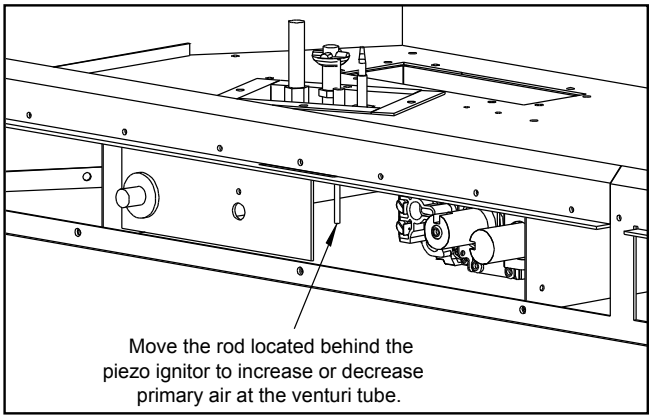

Figure 5: Venturi Air Setting Rod

Preparing Your Focus For Installation:

• Remove the packaging from the appliance and surround panels; check to make sure there is no damage. Carefully check the glass door. Do not use the unit if it is damaged. In the event damage is found, please report it to both the courier and your dealer as soon as possible.

• Carefully clean the fireplace and flue before installing the stove. Failure to do so may result in fumes or dirt being blown into the room and may cause a fire leading to death or serious injury.

1. Remove the unit from the box and remove all packaging material from the appliance.
2. Open the door by removing the two (2) $^{5}/_{16}$" bolts located at the top outside corners of the glass frame (see Figure 6). Lift door up and remove from unit. CAUTION GLASS MAY SEPARATE FROM DOOR.
3. Remove log and ember set and all wrapping material from the stove. Remove wrapping material from log and embers and check for any damage. If damage is observed, do not use unit and contact your local dealer.

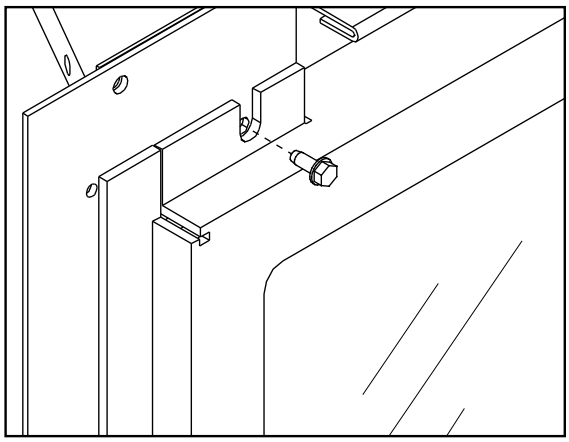

Figure 6: Top bolts for glass door.

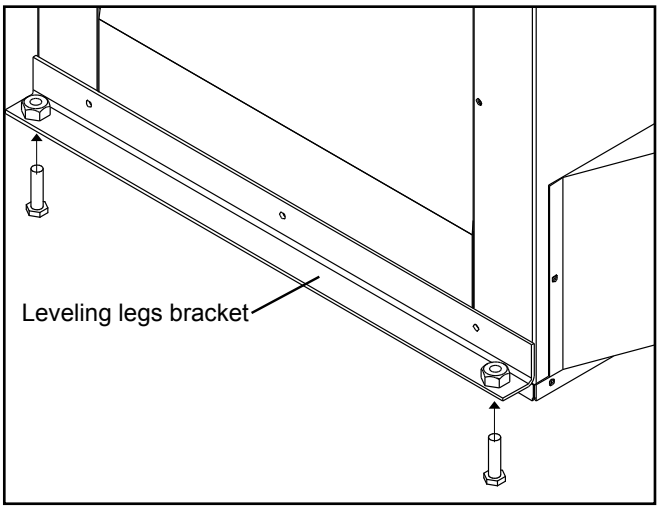

Figure 7: Installation of Leveling Legs.

4. Remove the vent collar plate from the top of the stove by unscrewing the two (2) T-20 Torx screws located on the center top of the stove. Slide collar plate backwards. Properly secure the vent collar plate to the flexible vent pipe liner(s) previously installed in the chimney. Be careful not to over-stretch the liner(s).
5. Install the leveling legs. Thread the two (2) 5" (13 cm) bolts and locknut up into the captive nuts at each end of the leveling leg bracket (refer to Figure 7).
6. Place the unit part way into the fireplace. Connect the fireplace insert's flexible gas line to the household gas supply, using locally approved methods. Place the electric cable so it can be connected to the power supply.
7. As you push the unit into its final position in the fireplace, reinstall the vent collar plate to the stove by sliding it along the draft hood and secure with the screw. Adjust the leveling legs to ensure the unit is level.

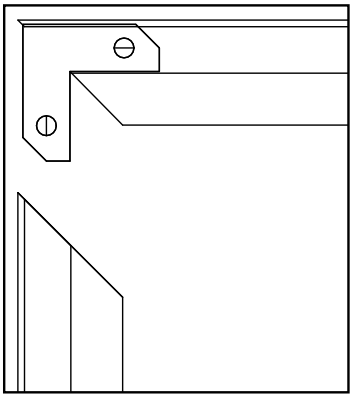

Figure 8: Corner bracket for surround trim.

8. Place one side and the top of the brass trim onto the surround panel and use corner bracket (see Figure 8) to secure pieces together. Place the second side of brass trim on the surround panel and secure in the same manner. Install spring clips provided behind the brass trim to secure trim to the surround panel.
9. Connect the wires from the unit to the ON/OFF/THERMOSTAT switch and the FAN CONTROLLER (see "Electrical Requirements" section).
10. Place the assembled surround panel around the stove, align the slots. Push back then down to engage the surround panel hooks with the slots in the fireplace. Install the decorative fascia or bay window options to the appliance by aligning the hooks and the slots in the fireplace as seen in the surround panel installation.

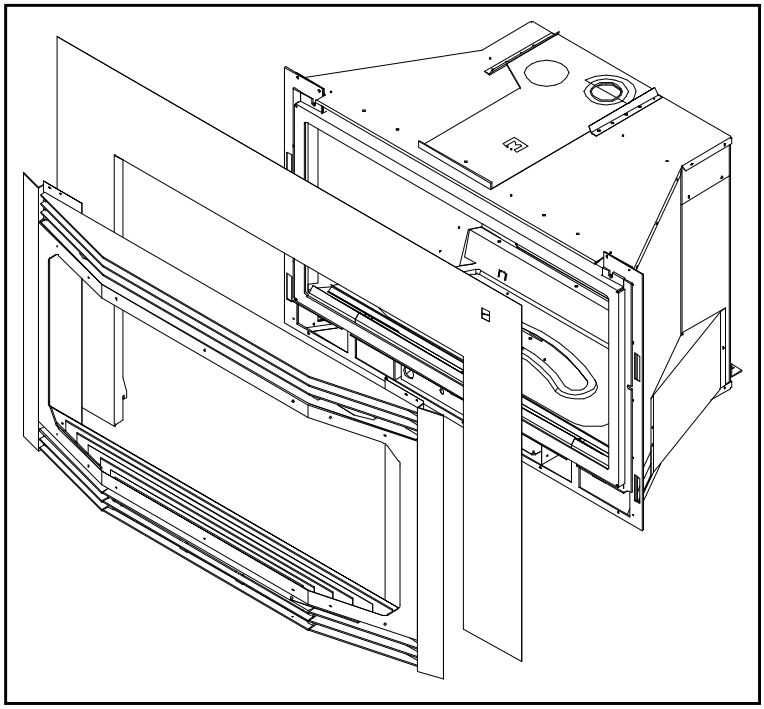

Figure 9: Surround Panel installation.

Initial Installation

QUALIFIED INSTALLERS ONLY

Converting A Direct Vent Fireplace To A B-Vented Fireplace:

Parts required for conversion;

1 - 300°F (149°C) manual reset spill switch and wires
1 - Drafthood (4" chimney connection)
2 - Air channels
1 - Drafthood diverter

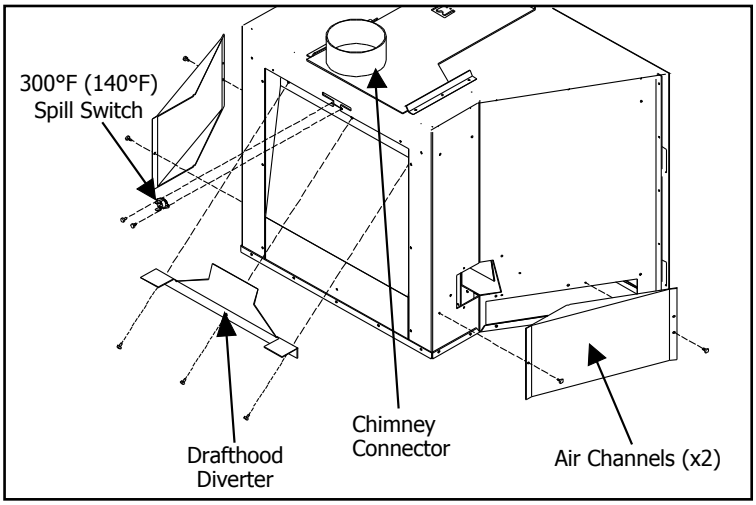

Figure 10: Converting To A BV Fireplace.

1. Remove the chimney connector, fresh air cover plates and draft hood cover plate.

2. Install the 300°F (149°C) spill switch in the location provided.

3. Install the two fresh air channels in the correct locations.

4. Install a new 4" chimney liner into the existing and attach with three (3) sheet metal screws evenly spaced to new 4" chimney connector.

5. Test fire the appliance and ensure proper operation. A venturi adjustment could be required to achieve an efficient flame. Improper operation or adjustment could result in Carbon Monoxide production causing personal injury or property damage.

Converting A B-Vent Fireplace To A Direct Vented Fireplace:

Parts required for conversion

1 - Drafthood (2-3" dual pipe chimney connector)
2 - Air channel cover plates
1 - Drafthood cover plate.

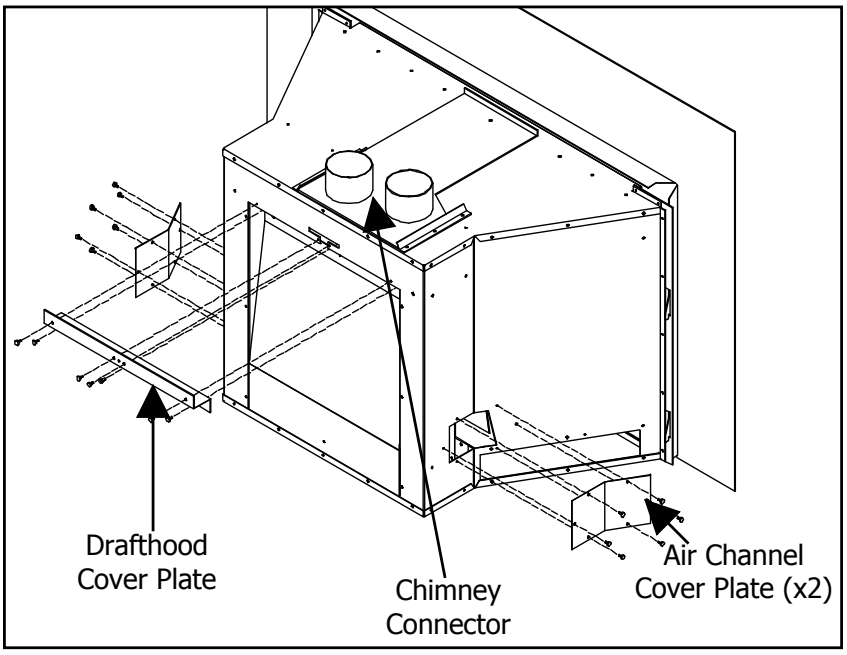

Figure 11: Converting To A DV Fireplace.

1. Remove the chimney connector, 300° spill switch, two (2) B-vent air channels and B-vent draft diverter plate.

2. Install the two (2) air channel cover plates in the locations provided.

3. Install the draft hood cover plate in the location provided.

4. Install two (2) 3" chimney liners in the existing chimney, securing the 3" liners with 3 sheet metal screws evenly spaced to the new chimney connector.

5. Test fire the appliance and ensure proper operation. A venturi adjustment could be required to achieve an efficient flame. Improper operation or adjustment could result in Carbon Monoxide production causing personal or property damage.

Initial Installation

QUALIFIED INSTALLERS ONLY

Electrical Requirements:

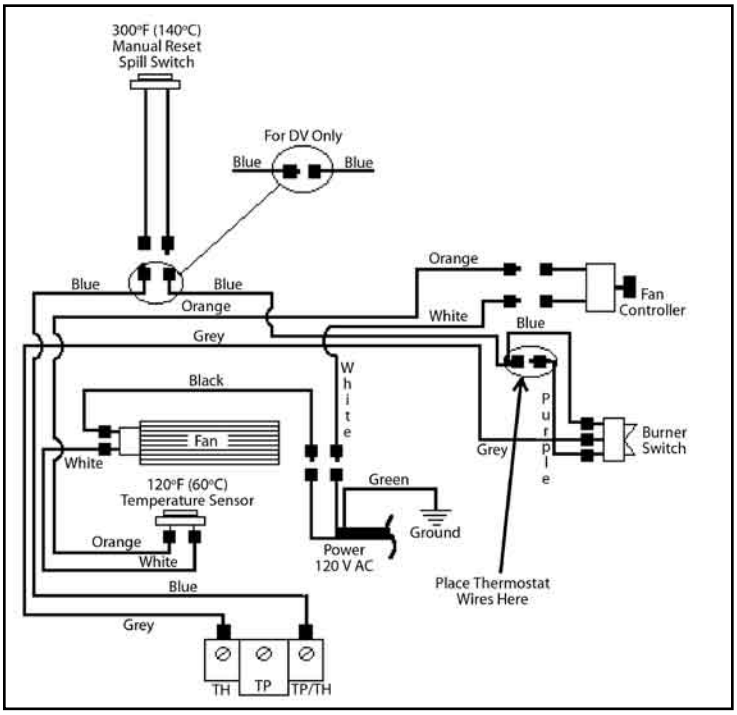

Figure 12: Focus Wiring Diagram.

The **Focus** will operate without electrical power. This model has a Millivolt gas control which uses the pilot flame to generate enough electricity to operate the main burners. This appliance when equipped with a blower, must be electrically connected and grounded in accordance with local codes or in the absence of local codes, with the current CSA C22.1 CANADIAN ELECTRICAL CODE Part 1, SAFETY STANDARDS FOR ELECTRICAL INSTALLATIONS, OR THE NATIONAL ELECTRICAL CODE ANSI / NFPA 70 in the U.S.

WARNING: Electrical grounding instructions. This appliance is equipped with a three-prong (grounding) plug for your protection against shock hazard, and should be plugged directly into a properly grounded three-prong outlet. DO NOT cut or remove the grounding prong from this plug.

CAUTION: Label all wires prior to disconnection when servicing controls. Wiring errors can cause improper and dangerous operation. Verify proper operation after servicing.

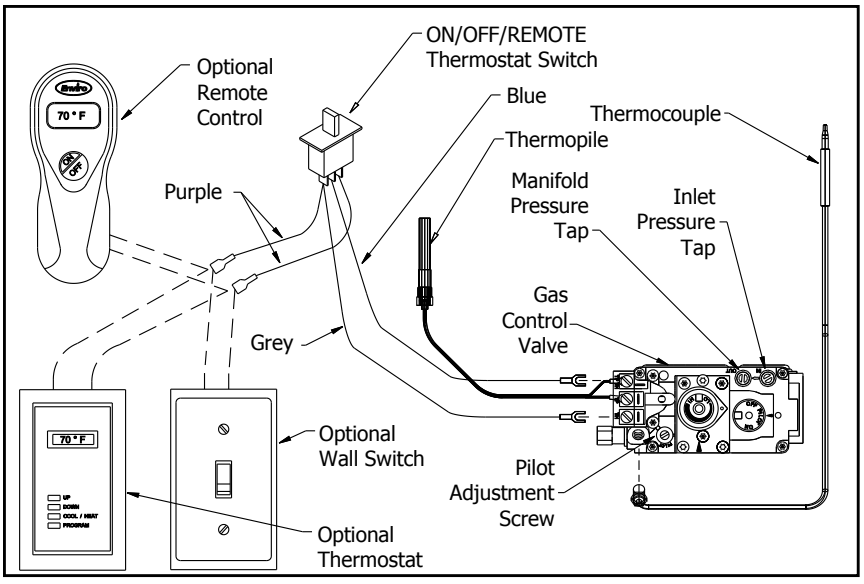

Figure 13: Wiring of a Thermostat.

Table 1. Recommended Thermostat Wire Size.

Wire Size	Max. Length
14 gauge	100 ft (30.48 m)
16 gauge	60 ft (18.29 m)
18 gauge	40 ft (12.00 m)
20 gauge	25 ft (7.62 m)
22 gauge	18 ft (5.49 m)

Initial Installation

QUALIFIED INSTALLERS ONLY

Installing Fan Controller:

When using the cast iron faceplate, bay door assembly, or custom surround panel the fan controller, normally mounted in the surround panel, must be relocated to control panel.

To accomplish this, cut one wire tie so that the wires can be properly routed. Place the orange and white wires through the right side of the unit then along behind the front edge of the fireplace bottom to the control panel. Use the wire ties provide to bundle and secure wire. Keep the wires away from the bottom of the firebox or any other hot surfaces.

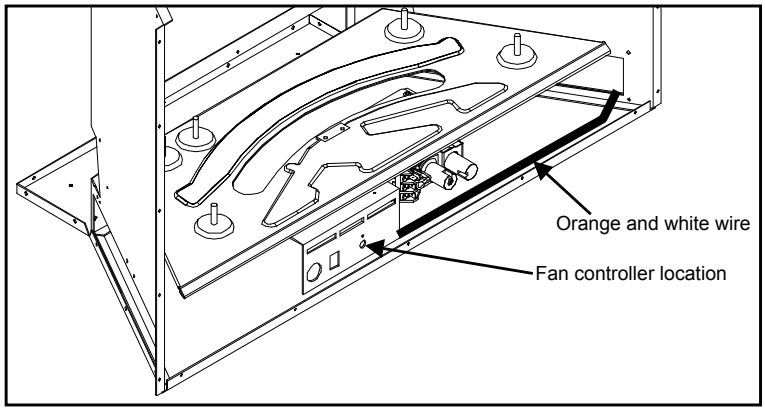

Figure 14: Route of the Fan Controller Wires.

Place the fan controller through the round hole in the control panel (see Figure 14) from the back. Tighten nut onto fan controller at front of control panel and push on knob.

Replacing the Blower:

1. Turn the unit off, open the door and remove the log set. Remove the burner tray top by removing the two (2) screws located in the center of the burner tray (see Figure 15). Slide tray to the left and lift out. Remove brick panels (see Removing and Installing Brick Panels).
2. Remove the surround panel by lifting straight up and then pull out to free from the body of the unit. Turn gas supply off and remove gas connection. Disconnect the wiring from the side of the appliance.
3. Remove the three (3) screws that hold the air deflector in place on the back firewall (see Figure 15) and undo the remaining screws that hold the burner assembly in the appliance. Carefully remove the gas tray assembly from the firebox, ensuring that no wires or gas lines are damaged.
4. Remove the blower and housing from the gas tray assembly by removing the fastening screws located on the back of the gas tray assembly. Disconnect the wiring from the fan temperature sensor and remove.
5. Hook up wires from the new blower to main wiring harness and fan temperature sensor. Install the blower in the reverse order as described in Step 4.
6. Reinstall the completed gas tray into the firebox, being careful not to damage any wires or gas lines. Properly secure the gas tray assembly in the firebox. Hook up gas lines and wiring harness. Perform a gas leak check on all gas line with a soap and water solution or an approved method.
7. Install surround panel. (Return unit to original location if moved). Re-install brick panels, burners, logset and door.
8. Check burner and blower assembly for proper operation.

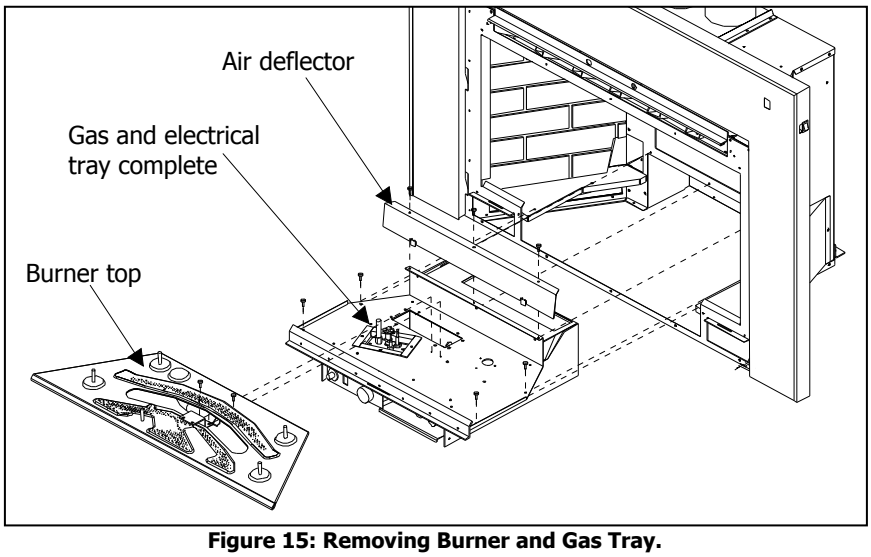

Figure 15: Removing Burner and Gas Tray.

Caution: Bleed lines before lighting and light pilot with door open

Initial Installation

QUALIFIED INSTALLERS ONLY

Fuel Conversion:

Warning: A qualified service technician, in accordance with the manufacturer's instructions as well as all applicable authority having jurisdiction, shall install this conversion kit. If the information in these instructions is not followed exactly, a fire, explosion or CO poisoning, may result. The qualified service agency is responsible for the proper installation of this kit. The installation is not proper or complete until the operation of the converted appliance is checked as specified in the owner's conversion kit.

Please read and follow these instructions. Also please read the instruction guide lines provided by S.I.T on how to remove and install the HI-LOW regulator.

STEP 1. Carefully inspect all parts supplied with this conversion kit.

STEP 2. Turn the unit off. Shut the gas off and disconnect the main gas line from the unit. Remove the surround panel by lifting straight up and then pull out to free from the body of the unit. Turn gas supply off and remove gas connection. Disconnect the wiring from the side of the appliance.

STEP 3. Open the door by unscrewing the two (2) 5/16" bolts on the top corners of the door frame. Lift the door off the mount at the bottom of the door frame.

STEP 4. Carefully remove the log set and ember material if they are installed. Remove brick panels (see Removing and Installing Brick Panels).

STEP 5. Remove the burner tray top by removing the two (2) screws located in the center of the burner tray (see Figure 15). Slide tray to the left and lift out.

STEP 6. Change the regulator on the front of the gas valve. (Follow the instructions provided by S.I.T)

STEP 7. To change the pilot orifice, simply pull the pilot hood straight up to access the pilot injector. Using a 5/32" Allen key remove the pilot injector and replace with new pilot injector supplied in the conversion kit.

STEP 8. Install the new pilot injector supplied with this conversion kit. Simply screw the new injector inside the pilot hood and reinstall pilot hood by placing hood on the assembly, lining up the key-way and snap into place.

STEP 9. Remove the main burner orifice with a ½" deep socket.

STEP 10. Install the new orifice supplied. Be sure to put a bead of pipe thread sealant or approved Teflon tape on the orifice before installing into the burner assembly.

STEP 11. Re-install burner tray. Reinstall the gas tray into the firebox, being careful not to damage any wires or gas lines. Properly secure the gas tray assembly in the firebox.

STEP 12. Also refer to "Installing Log Set and Embers". Install surround panel. (Return unit to original location if moved). Re-install brick panels, logset, and door. Also refer to "Installing Log Set and Embers".

STEP 13. Reconnect the gas line and wiring harness to the unit. Perform a leak check using a soap and water solution or an approved method on the gas supply line.

STEP 14. Re-light the appliance to insure proper operation and proper flame appearance. Be sure to adjust the venturi setting to achieve an efficient flame in the fireplace.

STEP 15. MAKE SURE that the sticker provided by S.I.T is installed to signify that this valve has been converted to a different type of fuel. Also make sure that the rating plate has a conversion label to show that this unit has been converted to a different fuel type.

A VISUAL CHECK OF THE REGULATOR KNOB IS NECESSARY TO DETERMINE WHETHER OR NOT THE REGULATOR IS THE CORRECT PART. A 50% TURN DOWN REGULATOR WILL HAVE ONLY ONE CORNER ON THE KNOB.

1 - 50% turn down HI-LOW Regulator
3 - T-20 Torx screws
1 - pilot injector
1 - Main orifice
Conversion instructions.
Labels to show conversion.

Table 2: Orifice Information.

	Natural Gas	Propane
Pilot Orifice	.51 mm	.35 mm
Burner Orifice Front	#38 DMS	#52 DMS
Venturi Setting Rear	1/16" min.	3/16" Min

Initial Installation

QUALIFIED INSTALLERS ONLY

Gas Line Connection:

Warning: Only persons licensed to work with gas piping may make the necessary gas connections to this appliance.

Gas Line Connection:

•This fireplace is equipped with a certified flexible pipe located on the right side of the unit, terminating in a ⅜" male NPT fitting. Consult the local authorities for local codes or use the CAN/CGA B149 (1 or 2) installation code in Canada. In the US, gas installations follow either local codes or the current edition of the National Fuel Gas Code ANSI Z223.1.

•The efficiency of this unit is a product thermal efficiency rating determined under continuous operating conditions and was determined independently of any installed system.

The appliance and its' shut-off valves must be disconnected from the gas supply piping system during any pressure testing where the pressure **exceeds** ½ psig (3.45 KPa) or the valve will be damaged.

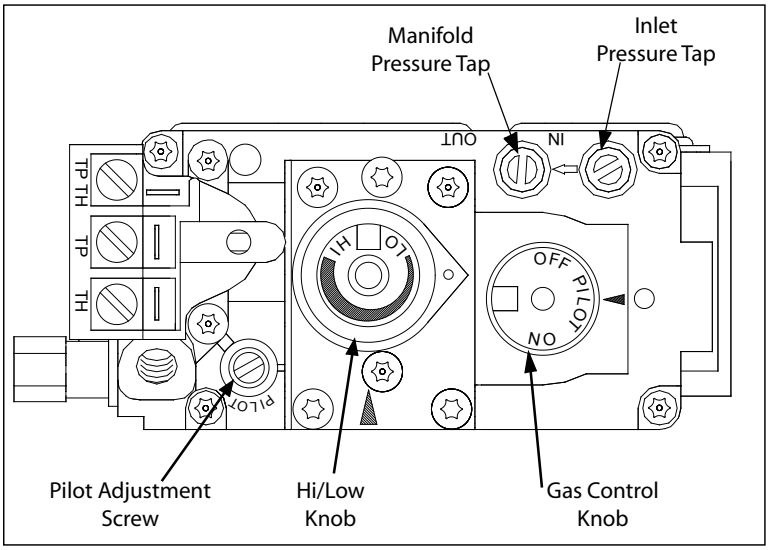

Figure 16: Fully Labeled Gas Valve.

The unit must be isolated from the gas supply piping system by closing its' individual manual shut off valve during any pressure testing of the gas supply piping system at pressures **equal to or less than** ½ psig (3.45 KPa).

Always check for gas leaks with a soap and water solution after completing the required pressure test.

TO TEST VALVE PRESSURES:

The pressure taps are located on the top right of the valve.

- Turn set screw 1 turn counterclockwise to loosen.
- Place 5/16 in (8 mm) I.D. hose over the pressure taps.
- Check pressures using a manometer.
- When finished, release pressure, remove hose and tighten set screw.

Table 3: Pressure and BTU Information.

Main Burner	Natural Gas (in W.C./KPa)	Propane Gas (in W.C./KPa)
Orifice:	#38 DMS	#52 DMS
Manifold Press:	3.8 / 0.95	11.0 / 2.74
Min. Manifold Press:	1.1 / 0.27	2.7 / 0.67
Max. Supply Press:	7.0 / 1.74	13.0 / 3.28
Min. Supply Press:	5.0 / 1.24	12.0 / 2.98
Max. BTU Input:	30,000/ 8.8 KW·h	28,500/ 8.2 KW·h
Min. BTU Input:	15,000/ 4.4 KW·h	14,000/ 4.1 KW·h

NEVER USE AN OPEN FLAME FOR LEAK TESTING.

Secondary Installation

Log Set and Ember Installation:

The placement of the logs is not arbitrary. If they are positioned incorrectly, the flames can be "pinched" and will not burn correctly. The burner comes with placement pins and rest areas, which make alignment easier. Using Figures 17 to 21, carefully set the logs in place.

NOTE: The logs are fragile and should be handled with care.



Figure 17: Focus burner.

Place the rear log on the two back placement pins.

Install the left front log on the left placement pin with the narrow end of the log resting on the rectangular rest area. Install the right front log on the right placement pin with the narrow end of the log resting on the rectangular rest area. These two logs should meet tip to tip on the rest area.

One end of the big log twig will rest on the pin on the right log and the other will lay within the left rest area. The small log twig should be placed so it sit completely within the right rest area.

Once the logs are in place the embers can be placed lightly between the logs. Bags of ceramic fiber embers and rock wool are provided. The ceramic fiber comes in chunks that are about 2"-4" (5-10cm) long. Break these roughly in half and place them irregularly around the burner. When there is a sparse but even layer of embers, spread the rock wool in the same manner. DO NOT pack this ember material as this could create an unsafe condition. The pieces should be lightly place so they don't completely block any of the tiny ports. DO NOT allow any of the embers to rest against the pilot assembly.

Caution: Use only the type of ember material supplied with this fireplace. Due to the irregular size of the ember material, there may be more than required. Use of other foreign materials on the burners may create dangerous conditions.

If over time, through cleaning and servicing, these embers require replacement , contact your nearest Enviro dealer.

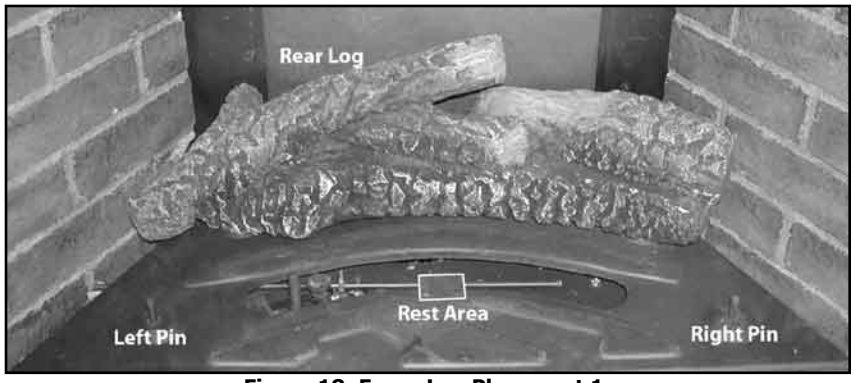

Figure 18: Focus Log Placement 1.

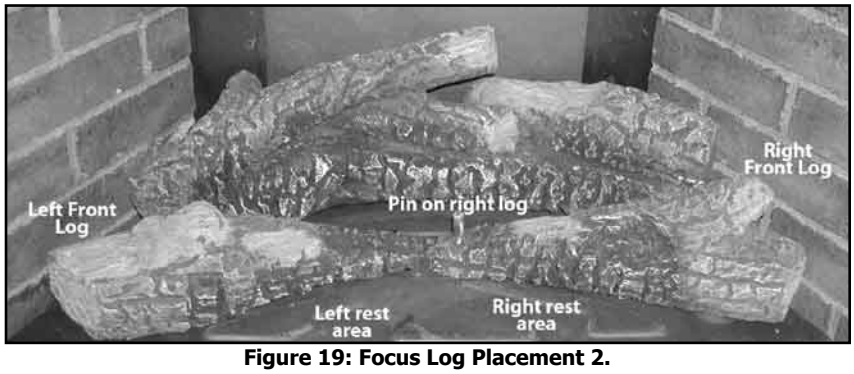

Figure 19: Focus Log Placement 2.

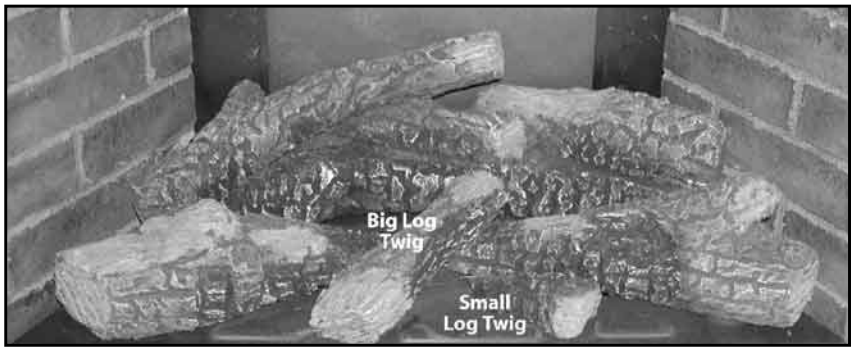

Figure 20: Focus Log Placement 3.

Secondary Installation



Figure 21: Focus Log Placement Complete.

IMPORTANT: Upon the first light up after installing logs and embers, watch for ignition to ALL burner ports. If a long delay is noted wait for the appliance to cool down:

•Open the front door of the appliance

•Carefully reposition the embers, making sure that the burner ports are not plugged or blocked.



Figure 22: Focus Log Set Burning.

Removing and Installing The Brick Panel:

Open the door. Remove the log set. Remove the burner tray by undoing the hold-down screws located in the center of the pan burner and sliding the assembly to the left, then up.

Gently pull right brick side panel inward from the bottom back. Pull towards the back then out, freeing it from the front retainer.

Caution Pilot may damage panel. Remove left side panel in the same fashion.

To install, insert front edge of brick panel into the retainer and very gently move panel forward and out until flush against firebox side.

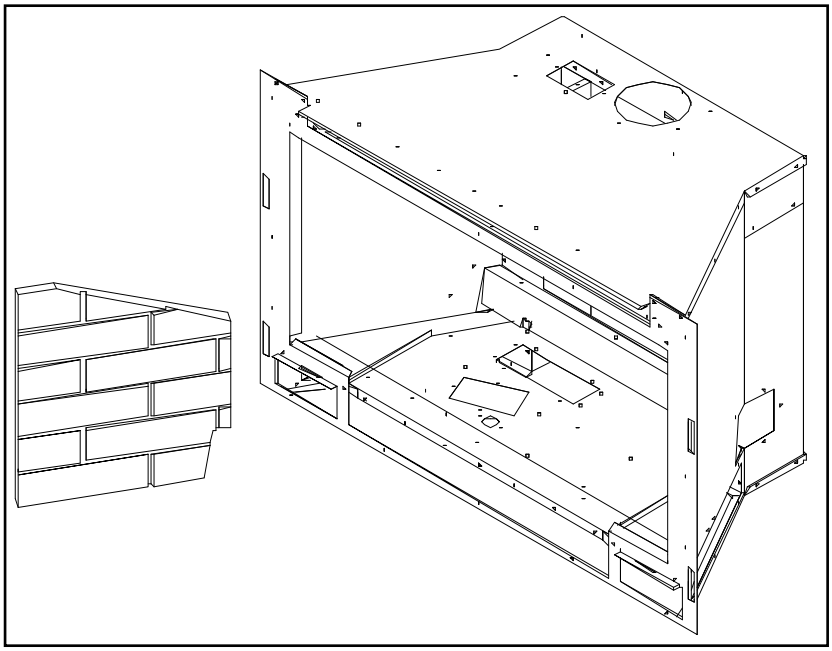

Figure 23: Brick Panel Installation.

Operating Instructions

FOR YOUR SAFETY READ COMPLETELY BEFORE OPERATING.

WARNING: IF YOU DO NOT FOLLOW THESE INSTRUCTIONS EXACTLY, A FIRE OR EXPLOSION MAY RESULT CAUSING PROPERTY DAMAGE, PERSONAL INJURY OR LOSS OR LIFE.

This appliance is equipped with a pilot that must be lit by hand by following these instructions exactly.

A) BEFORE LIGHTING smell all around the appliance area for gas, and next to the floor because some gas is heavier than air and will settle on the floor.

WHAT TO DO IF YOU SMELL GAS:

- Do not try to light any appliance.
- Do not touch any electrical switch; do not use any phone in your building.
- Immediately call your gas supplier from a neighbor's phone. Follow the gas supplier instructions.
- If you cannot reach your gas supplier, call the fire department.

B) Use only your hand to push in or turn the gas control knob. Never use tools. If the knob will not push in or turn by hand, do not attempt to repair it. Call a qualified service technician. Force or attempted repair may result in a fire or explosion.

C) Do not use this appliance if any part has been under water. Immediately call a qualified service technician to inspect the appliance and to replace any part of the control system and any gas control which has been under water.

Lighting Instructions:

The pilot light will remain on when the fireplace is in regular use, but when the fireplace is used only in certain seasons, the pilot may be extinguished during the off months. When the pilot is to be re-lit, the following steps MUST be followed.

1. STOP! Read the safety information above.
2. Turn off all electrical power to the appliance.
3. Turn the gas control knob clockwise to the "off' position.
4. Open door. **Wait five (5) minutes to clear out any gas.** Close Door. **If you smell gas, including near the floor, STOP! Follow A in the above safety information. If you do not smell gas, continue to the next step.** Leak test all gas joints with soapy water **NEVER USE AN OPEN FLAME FOR LEAK TESTING**. If you don't smell gas go to next step.you don't smell gas go to next step.

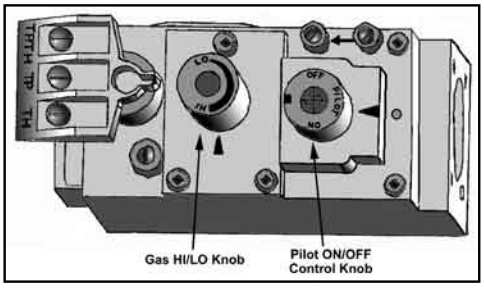

Figure 24: Gas Valve.

5. Find the pilot located to the right between the front and rear burner.
6. Turn gas control knob counter-clockwise to "PILOT".
7. Push the gas control knob in fully and hold. A BATTERY operated electronic igni light the pilot. Keep knob depressed for about 30 seconds after pilot is lit. **Chec the pilot flame has fully engulfed the thermocouple assembly (see F 25)**. Release knob. If pilot goes out, repeat steps 4 through 6.

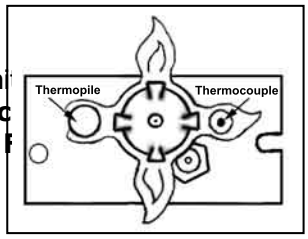

Figure 25: Pilot Burning.

WARNING: The gas valve has an lockout device which will not allow the pilot burner to be re-lit until the thermocouple has cooled.

If the knob does not pop up when released, stop and immediately call your service technician or gas supplier.

If the pilot will not stay lit after several tries, turn the gas control knob to "OFF" and call your service technician or gas supplier.

8. Turn gas control knob counter-clockwise to the "ON" position. Flip burner switch to "ON". Turn "HI / LO" knob to the desired setting. Turn on all electrical power to the unit. Check that all burner ports have flame.
9. Leak test all gas joints again.

Turning Gas Off To Appliance:

1. Depress the gas control knob slightly and turn it clockwise to "PILOT". Repeat to turn to the "OFF" position. DO NOT FORCE
2. Turn off all electrical power to the appliance if service is to be performed.
3. Flip burner switch to off, to turn off burners only.

Maintenance And Service

At least once a year, run through the following procedures to ensure the system is clean and working properly.
Periodically check the burner and pilot. Check the burner to see if all the ports are clear and clean. Check the pilot to make sure it is not blocked by anything. The pilot flame should be blue with little or no yellow on the tips.

OPENING THE DOOR:

Turn unit off and wait until the appliance has cooled down.
Remove the decorative fascia by lifting up and remove from the slots in the body of the unit.
If a clip-on bay window is installed, lift up and remove from the slots in the body of the unit.
Undo the two 5/16" bolts at the top of the door frame and then lift the glass and frame, being careful that the glass does not fall out of the door frame assembly. Install in the reverse order.
Ensure the door is properly fastened after cleaning before attempting to re-light the appliance.

CLEANING THE GLASS:

Do not clean glass when hot

It will be necessary to clean the ceramic glass periodically. During a cold start up, condensation will sometimes form on the glass. This is a normal condition with all gas fireplaces and stoves. However, this condensation can allow dust and lint to cling to the glass surface. Initial paint curing of the appliance can leave behind a slight film on the glass. This is a temporary problem. It is therefore recommended that the glass be cleaned initially after the first two weeks of use.
Depending upon the amount of use, cleaning should be required no more than two or three times per season.
To clean the door, use a **mild glass cleaner** and a **soft cloth. Abrasive cleaners will damage the glass and gold surfaces.**

CLEANING THE FIREBOX:

Remove the log carefully from the firebox. Gently remove the embers and place on a piece of paper towel, until ready to replace.
Vacuum the bottom of the firebox thoroughly. Carefully clean off any dust on the logs and brick panels and remove any lint from the main burner and pilot burner.
After carefully replacing the log and embers in their correct positions, and the door has been resealed, re-light the pilot, following the instructions on the attached label.

REPLACING DOOR GLASS:

The glass in this appliance is ceramic. If the glass is damaged or broken a factory replacement must be fitted.

To Replace:

- Open door, remove the glass carefully.
- Install the new piece of glass with the large bulb in the gasket tape against the unit. Place the joint in the tape in a bottom corner. Close door.

Glass must be purchased from an Enviro dealer. No substitute materials are allowed.

Warning: Clearances must be sufficient to allow access for maintenance and service
Warning: Failure to position the parts in accordance with this manual, or failure to use only parts specifically approved with this appliance may result in property damage or personal injury.

MAINTAINING FAECE AND SURROUND FINISHES:

When a plated surround or face is received, it should be unpacked/unwrapped carefully to avoid getting anything on the surface of the finish, including cleaners, polish and finger prints. If your fingers come into contact with the finishes, the oils left as fingerprints on the plating can become permanently etched in the surface. To prevent this, clean the painted surfaced with a damp cloth and clean plated finishes with denatured alcohol after the installation and prior to first firing of the fireplace. If your fingers come into contact with the antique copper finish, the oils left as fingerprints on the copper can cause discoloration, which will eventually turn green in that area. You can clean the patina or discolored areas of the antique copper finish with "OO" 3M green sanding pads. These can be purchased from most hardware stores. On the areas with discoloration, use the sanding pads to sand in the same direction as the brushed finish, then blend the finish by feathering in the surrounding area. This refinishing procedure has been approved by the manufacturer and will not harm the finish. Please note: ANTIQUE COPPER IS THE ONLY FINISH THAT CAN BE SANDED, DO NOT SAND PEWTER, GOLD OR NICKEL FINISHES.

Trouble Shooting

Problem	Possible Cause	Solution
Spark will not arc to the pilot after repeatedly pressing the spark ignitor	Defective piezo ignitor	• Check connections to ignitor • If ignitor connections are good but no spark, replace ignitor.
	Broken spark electrode	• Check for broken ceramic insulation. Replace electrode if broken.
	Mis-aligned spark electrode	• If spark is not arcing from electrode to pilot, adjust by loosening the screws on the pilot base. Adjust and tighten.
Pilot will not remain lit	Problem with thermocouple circuit	• Check for proper connection of the thermocouple to the rear of the valve; if loose fully tighten. • Check pilot for full flame impingement around thermocouple. If flame is too small, check gas pressure, adjust pilot rate screw, check pilot head for damage. • Check thermocouple voltage at valve. It must be greater than 5 mV. If low, replace thermocouple.
	Air in gas line (pilot dies while knob is depressed)	• Bleed line. • Check gas line pressure. • Contact dealer.
Burners will not remain lit	Problem with thermopile circuit	• Check gas line pressure . • Check for flame impingement in thermopile. If low, see "Pilot will not remain lit". • Check thermopile for minimum of 300 mV when burner is switched on. • Check wiring to thermostat for breaks **BV ONLY:** •Check for spillage at draft hood that may trip spill switch
Flame lifting	Leak in vent pipe	• Check for leaks in vent connections.
	Improper vent configuration	• Check vent configuration with manual.
	Terminal may be recirculating flue gases	• Check to see if terminal is on correctly. • May need to install high wind termination cap. • Contact dealer.
Glass fogs up	Normal Condition: after the appliance warms up the glass will clear. **Due to additives in gas, glass may get hazy during operation** Clean as needed	
Blue Flames	Normal during start up: flames will yellow as the fireplace heats up.	
Flames are burning "dirty" or sooting	Flame impingement	• Check log positioning. • Increase primary air by opening the venturi shutter. See also "Burners will not remain lit".
BV ONLY: Insufficient air for combustion	• Air tight house. • A vacuum in room due to other air-moving device.	• Supply make up air to the unit.

Parts List - Components

Reference Number	Part Description	Part Number
	Extension Knob (Pilot)	30-030
	Extension Knob (HI-LO)	30-031
	Relief Door & Gasket	30-034
1	Blank Orifice #73	50-343
	BV Flue Collar Gasket	50-528
	DV Flue Collar Gasket	50-529
	Log Set & Embers	50-588
2	Ceramic Brick Liner	50-610
	Dual Bulb Door Gasket (10 feet)	50-634
3	Pan Burner	50-897
4	120°F (49°C) Ceramic Fan Temperature Sensor	EC-001
5	300°F (149°C) Spill Switch	EC-003
6	S.I.T. Nova Valve NG (50% Turn Down)	EC-006
6	S.I.T. Nova Valve LP (50% Turn Down)	EC-007
7	Thermocouple	EC-009
7	Spark Electrode with Ignitor Cable	EC-011
7	Thermopile	EC-012
7	Fully Assembled Pilot NG	EC-015
7	Fully Assembled Pilot LP	EC-016
7	Pilot Orifice NG Threaded	EC-019
7	Pilot Orifice LP Threaded	EC-020
7	Pilot Gasket	EC-021
8	S.I.T. Piezo Ignitor	EC-023

Parts List - Components

Reference Number	Part Description	Part Number
	Stainless Steel Flex Connector with ⅜” Elbow 18” Long	EC-024
9	FPI Burner Switch	EC-026
10	FPI Fan Controller - 115 V	EC-039
10	FPI Fan Controller Knob	EC-041
	Domestic Power Cord - 115 V	EC-042
	Heyco Strain Relief	EC-044
	Embers (Coal & Wool)	EC-046
11	Convection Blower - 115 V	EC-069
12	Burner Control Assembly NG	EG31-052
12	Burner Control Assembly LP	EG31-053
	Burner Switch Bracket	EG31-075
	Relief Door Gasket	EG31-087
	Window Channel Tape (6 feet)	EG31-089
13	1 Piece Glass With Tape (6 feet)	EG31-090
14	Door Only - Painted	EG31-092
15	Venturi	EG31-099
	Owner’s Manual	EG31-118
	⅜” NTP Male ⅜ Comp. 90° Elbow	EG31-124
	¼” NTP Female ⅜ Comp. 90° Elbow	EG31-125
	LP to NG Conversion Kit	EG31-200
	NG to LP Conversion Kit	EG31-202
16	Conversion Kit BV to DV	EG31-205
17	Conversion Kit DV to BV	EG31-206

Parts Diagram - Body

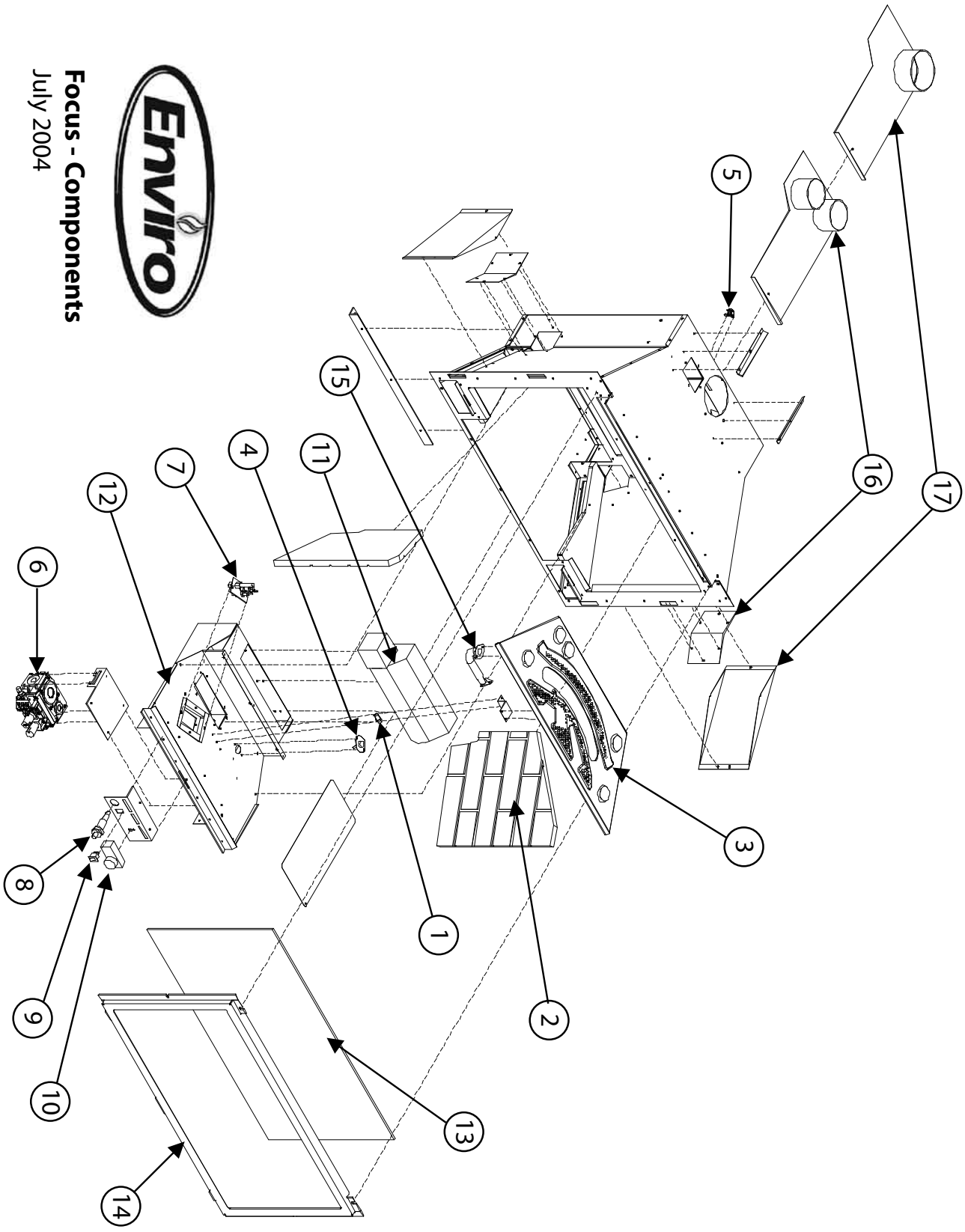

Parts List - Surrounds & Fascia

Reference Number	Part Description	Part Number
	Steel Bay Face - Polished Nickel	50-092
	Steel Bay Face With Glass - Painted	50-141
	Steel Bay Cover - Gold	50-142
	Steel Bay Cover - Polished Nickel	50-143
	Steel Bay Cover - Painted	50-531
	Steel Bay 3 Pieces Glass Set with Tape	EG31-091
18	Standard Surround Panel - Black Trim	50-111
18	Standard Surround Trim Only - Brass	EG31-103
18	Standard Surround Trim Only - Black	50-123
18	Standard Surround Trim Only - Nickel	50-135
19	Oversized Surround Panel - Black Trim	50-112
19	Oversized Surround Trim Only - Nickel	EG31-107
	Louvre Set Top & Bottom - Painted	50-505
	Cottage Face - No Trim	50-695
	Cottage Trim Kit - Painted Black	50-696
	Cottage Trim Kit - Gold	50-597
	Cottage Trim Kit - Pewter	50-598
	Cottage Trim Kit - Antique Copper	50-599
20	Arched Face - Painted Black	EG31-106
20	Arched Face - Gold	EG31-108
20	Arched Face - Nickel	EG31-113
21	Square Face - Painted Black	EG31-110
21	Square Face - Gold	EG31-112
21	Square Face - Nickel	50-487
	Cape Cod Fascia - Brushed Nickel	50-1074
	Cape Cod Fascia - Brushed Gold	50-1075
	Cape Cod Fascia - Onyx	50-1076
	Cape Cod Fascia - Charcoal	50-1077
	Cape Cod Fascia - Polished Nickel	50-1078
	Cape Cod Doors - Brushed Nickel	50-1079
	Cape Cod Doors - Brushed Gold	50-1080
	Cape Cod Doors - Onyx	50-1081
	Cape Cod Doors - Charcoal	50-1082
	Cape Cod Doors - Polished Nickel	50-1083

Parts Diagram - Surrounds & Fascia

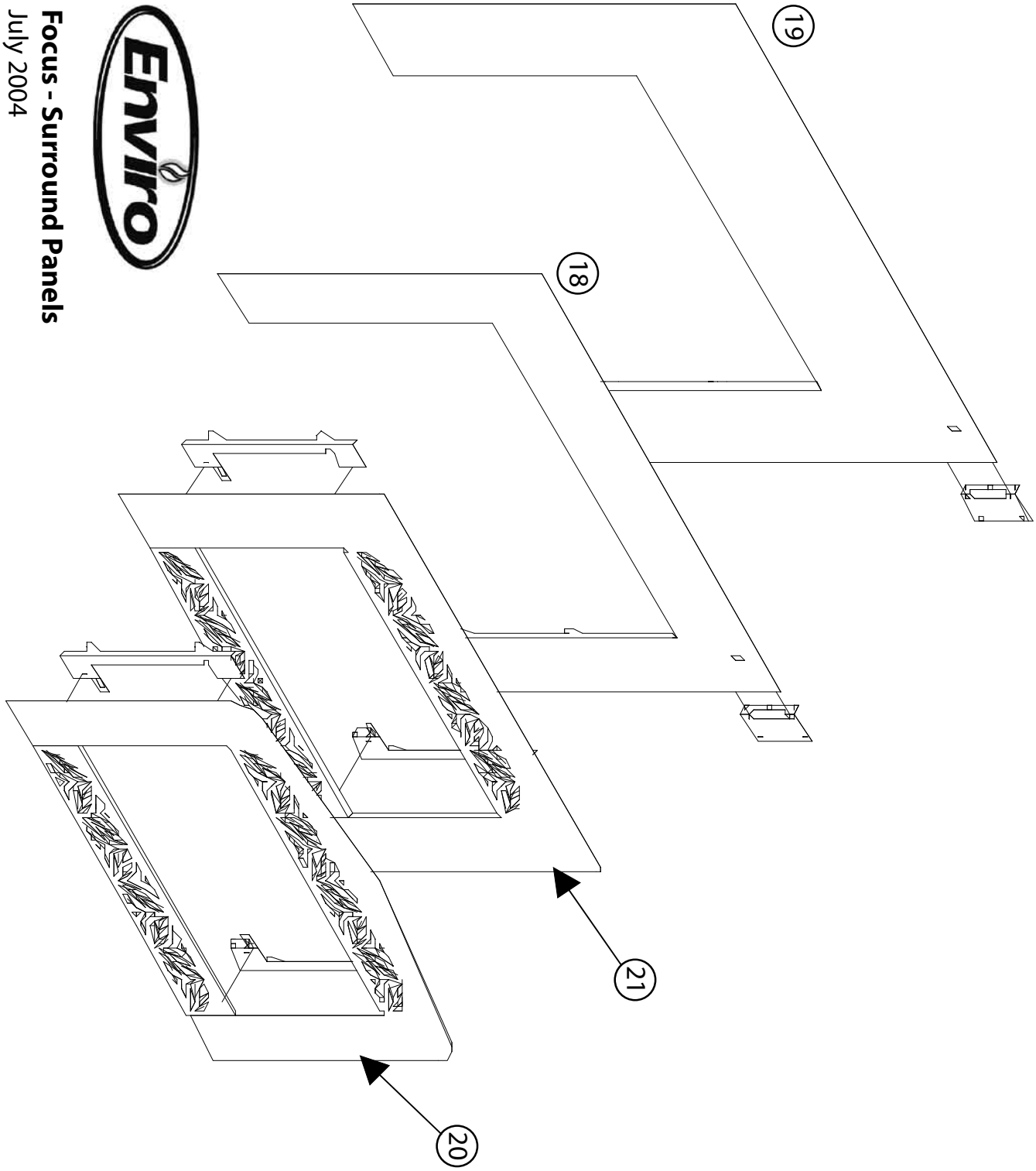

Parts List - Cast

Reference Number	Part Description	Part Number
	Cast surround only - Painted	30-036
	Cast surround only - Antique White	30-035AW
	Cast surround only - Diamond Black	30-035DB
	Cast surround only - Inferno Red	30-035IR
	Cast surround only - Pearl Grey	30-035PG
	Cast surround only - Wedgewood Blue	30-035WB
	Cast surround only - Westport Green	30-035WG
	Cast surround only - Antique Chestnut	50-886
22	Cast surround top piece.only - Painted	50-381
22	Cast surround top piece.only - Antique White	50-382
22	Cast surround top piece.only - Diamond Black	50-383
22	Cast surround top piece.only - Inferno Red	50-384
22	Cast surround top piece.only - Pearl Grey	50-385
22	Cast surround top piece.only - Wedgewood Blue	50-386
22	Cast surround top piece.only - Westport Green	50-387
22	Cast surround top piece.only - Antique Chestnut	50-887
23	Cast surround left piece.only - Painted	50-388
23	Cast surround left piece.only - Antique White	50-389
23	Cast surround left piece.only - Diamond Black	50-390
23	Cast surround left piece.only - Inferno Red	50-391
23	Cast surround left piece.only - Pearl Grey	50-392
23	Cast surround left piece.only - Wedgewood Blue	50-393
23	Cast surround left piece.only - Westport Green	50-394
23	Cast surround left piece.only - Antique Chestnut	50-888
24	Cast surround right piece.only - Painted	50-395
24	Cast surround right piece.only - Antique White	50-396
24	Cast surround right piece.only - Diamond Black	50-397
24	Cast surround right piece.only - Inferno Red	50-398
24	Cast surround right piece.only - Pearl Grey	50-399
24	Cast surround right piece.only - Wedgewood Blue	50-400
24	Cast surround right piece.only - Westport Green	50-401
24	Cast surround right piece.only - Antique Chestnut	50-889
25	Cast front only (no surround, glass, valve door, or clip-on) - Painted	50-402

Parts List - Cast

Reference Number	Part Description	Part Number
25	Cast front only (no surround, glass, valve door, or clip) - Antique White	50-403
25	Cast front only (no surround, glass, valve door, or clip) - Diamond Black	50-404
25	Cast front only (no surround, glass, valve door, or clip) - Inferno Red	50-405
25	Cast front only (no surround, glass, valve door, or clip) - Pearl Grey	50-406
25	Cast front only (no surround, glass, valve door, or clip) - Wedgewood Blue	50-407
25	Cast front only (no surround, glass, valve door, or clip) - Westport Green	50-408
25	Cast front only (no surround, glass, valve door, or clip) - Antique Chestnut	50-890
26	Cast valve access door - Painted	30-028
26	Cast valve access door - Antique White	50-451
26	Cast valve access door - Diamond Black	50-452
26	Cast valve access door - Inferno Red	50-453
26	Cast valve access door - Pearl Grey	50-454
26	Cast valve access door - Wedgewood Blue	50-455
26	Cast valve access door - Westport Green	50-456
26	Cast valve access door - Antique Chestnut	50-891
27	Cast iron front complete - Painted	50-743
27	Cast iron front complete - Antique White	50-744
27	Cast iron front complete - Diamond Black	50-745
27	Cast iron front complete - Pearl Grey	50-746
27	Cast iron front complete - Inferno Red	50-747
27	Cast iron front complete - Wedgewood Blue	50-748
27	Cast iron front complete - Westport Green	50-749
27	Cast iron front complete - Antique Chestnut	50-811
28	Cast trim piece - Painted	EG31-399
28	Cast trim piece - Antique White	EG31-399AW
28	Cast trim piece - Diamond Black	EG31-399DB
28	Cast trim piece - Inferno Red	EG31-399IR
28	Cast trim piece - Pearl Grey	EG31-399PG
28	Cast trim piece - Wedgewood Blue	EG31-399WB
28	Cast trim piece - Westport Green	EG31-399WG
28	Cast trim piece - Antique Chestnut	50-812
	Clip-on assembly only (for cast bay door)	50-462
29	Cast Bay 3 pieces Glass set with tape	50-496

Parts Diagram- Cast Bay Front

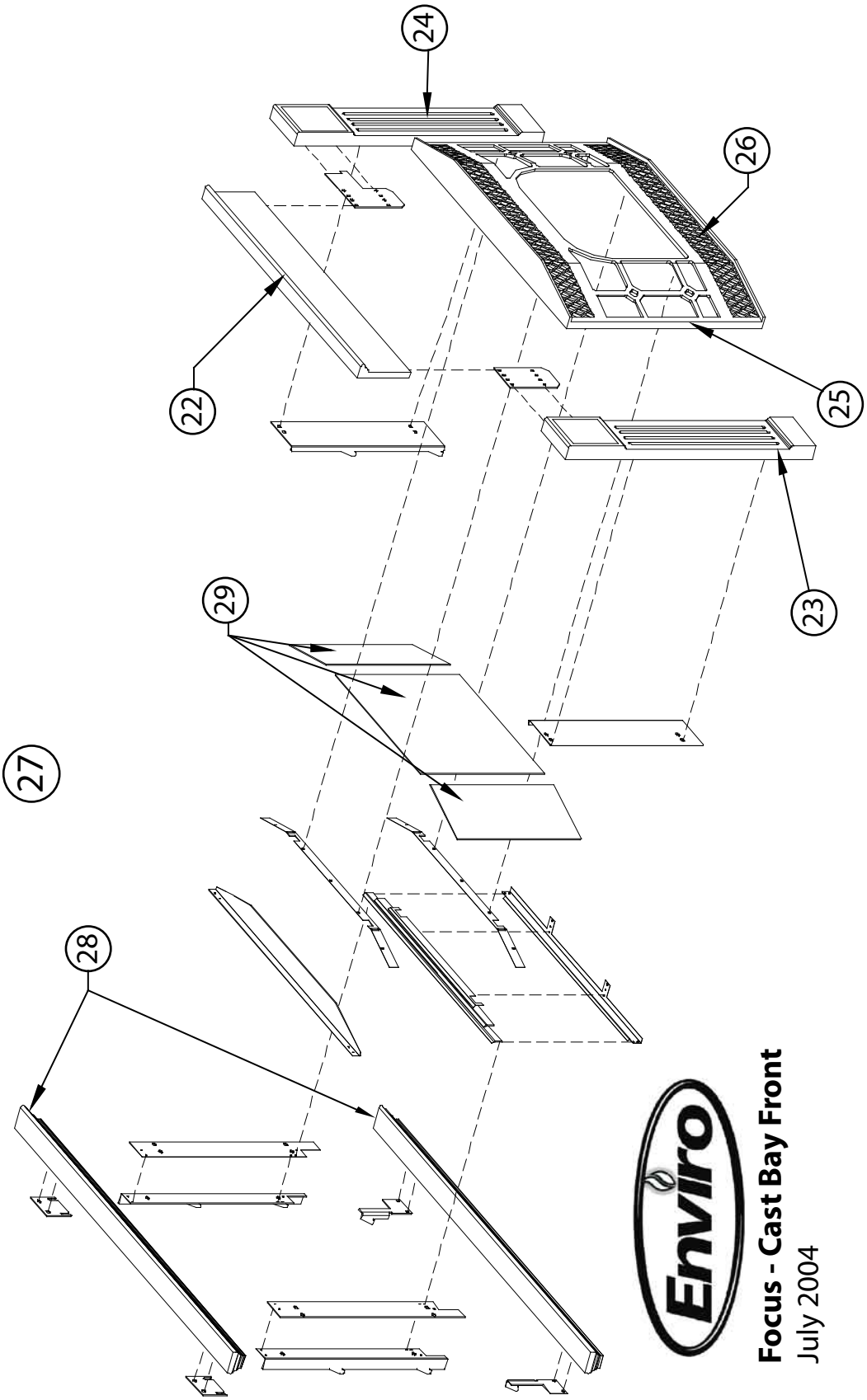

Focus - Cast Bay Front
July 2004

Warranty

Sherwood Industries Ltd. offers a Limited Lifetime Warranty on this gas product. This Limited Lifetime Warranty covers the appliance for a period of seven years from the date of installation. This warranty applies only to the original owner in the original location.

Covered under the lifetime warranty are: the surround, the chassis and the heat exchanger. These steel components are covered against manufacturer's defects for seven (7) years and the labour for the first year. The following exclusions apply: over-firing due to incorrect setup or tampering, or damage caused by incorrect installation, usage or abuse. The unit must be properly installed by a qualified technician or installer, and must meet all local and national gas and building code requirements.

We also cover against manufacturer's defects, under our Limited Lifetime warranty, the following components:
Log Set, Burners and Glass.
The following exclusions apply:
Plating - Damage caused by scratching, marring, chemicals, fingerprints, abrasive cleaners or discoloration with age. Items with Antique Copper that have had a green discoloration of the finish. If discoloration occurs, please follow the cleaning instructions as outlined in the "Maintaining Face and Surround Finishes" section.
Porcelain Finishes - Damage caused by chipping, scratching, marring, chemicals, fingerprints, abrasive cleaners, discoloration with age
Glass - use of harsh or abrasive cleaners, striking the glass or surface contaminates.
Logset - Damage caused by incorrect handling or misuse.
Burners - damage caused by improper or continuous operation under incorrect conditions.

Sherwood Industries Ltd. offers a two-year warranty on all the electrical components and gas components, against manufacturing defects. Paint is also covered against flaking. This offer includes parts and labour for one year, and parts only thereafter.

Your dealer shall make all claims under this warranty in writing.

WHEN FILING A WARRANTY CLAIM, PLEASE COMPLETE THE FOLLOWING INFORMATION ON AN OFFICIAL WARRANTY CLAIM FORM:

TO THE DEALER:

Name, address and telephone number of purchaser and date of purchase, date of installation, name of installer and dealer, nature of complaint, defects or malfunction, description and part number of any parts replaced.

TO THE DISTRIBUTOR:

Sign and verify that work and information are correct.

This warranty covers defects in materials and workmanship only if the product has been installed according to the manual's instructions. If the product is damaged or broken as a result of misuse or mishandling, the warranty does not apply. The warranty does not cover removal and reinstallation costs.

Sherwood Industries Ltd. reserves the right to repair or replace the defective product. The shipping costs are to be paid by the consumer. All warranties by the manufacturer are set forth and no claim shall be made against the manufacturer on any oral warranty or representation.

Sherwood Industries Ltd. and its' employees or representatives will not assume any damages, either directly or indirectly, caused by improper usage, operation installation, servicing or maintenance of this appliance.

Sherwood Industries Ltd. reserves the right to make changes without notice. Please complete and mail the warranty registration card and have the installer fill in the installation data sheet in the back of the manual for warranty and future reference.

Installation Data Sheet

The following information must be recorded by the installer for warranty purposes and future reference.

NAME OF OWNER:

_____

ADDRESS:

_____

_____

_____

PHONE:_____

NAME OF DEALER:

_____

ADDRESS:

_____

_____

_____

PHONE:_____

MODEL:_____

SERIAL NUMBER:_____

DATE OF PURCHASE: _____ (dd/mm/yyyy)

DATE OF INSTALLATION:_____(dd/mm/yyyy)

☐ NATURAL GAS (NAT) ☐ PROPANE(LPG)

INLET GAS PRESSURE:_____in wc

MAIN BURNER ORIFICE:_____# DMS

PILOT ORIFICE #_____OR_____in diam.

INSTALLER'S SIGNATURE:

_____

NAME OF INSTALLER:

_____

ADDRESS:

_____

_____

_____

PHONE:_____

MANUFACTURED BY:
SHERWOOD INDUSTRIES LTD.
6782 OLDFIELD RD. SAANICHTON, BC, CANADA V8M 2A3
www.envirofire.biz
February 21, 2005
C-10472