SHERWOOD INDUSTRIES IS AN ENVIRONMENTALLY RESPONSIBLE COMPANY. THIS MANUAL IS PRINTED ON RECYCLED PAPER.

PLEASE KEEP THESE INSTRUCTIONS FOR FUTURE REFERENCE

Enviro

PELLET STOVE

Evolution

OWNER'S MANUAL



Contact your building or fire officials about restrictions and installation inspection requirements in your area.

INTERTEK Warnock Hersey C US

PLEASE READ THIS ENTIRE MANUAL BEFORE INSTALLATION AND USE OF THIS PELLET-BURNING ROOM HEATER. FAILURE TO FOLLOW THESE INSTRUCTIONS COULD RESULT IN PROPERTY DAMAGE, BODILY INJURY OR EVEN DEATH.

50-1021

Table of Contents

Introduction....3
- Pellet Quality....3
- Rating Label Location....3
- Important Safety Data....4
- Safety Warnings And Recommendations....4

Operating Instructions....6
- Control Board Functions....6
- Automatic Safety Features of Your Pellet Stove....6
- Operating Your Pellet Stove....7
- Turning Your Pellet Stove Off....7

Routine Cleaning and Maintenance....8

Installation....11
- Deciding Where to Locate your Pellet Appliance....11
- Removing Pellet Stove From Pallet....11
- Appliance Dimensions....12
- Clearances to Combustibles....13
- Alcove Clearances....13
- Hearth Pad Pedestal Installation....14
- Vent Termination Requirements....15
- Outside Fresh-Air Connection....16
- Exhaust And Fresh Air Intake Locations....16
- Mobile Home Installation....17
- Corner Through Wall Installation....17
- Horizontal Exhaust Through Wall Installation....18
- Through Wall With Vertical Rise and Horizontal Termination Installation- Recommended....19
- Through Concrete Wall With Vertical Rise Installations....19
- Inside Vertical Installations....20
- Outside Vertical Installations....20
- Hearth Mount Installation....21
- Exterior Mounted Exhaust Blower....22
- Typical Through Wall With Exterior Blower Kit Installation - Horizontal Termination....23
- Typical Through Wall With Exterior Blower Kit Installation - Vertical Termination....24
- Thermostat Installation....25
- Optional Slider/Damper Installation....25
- Slider/Damper Set-Up....26

Troubleshooting....27
- Fuses....29

Wiring Diagram....30

Parts List....31

Parts Diagram - Components....33

Parts Diagram - Steel....34

Warranty....35

Installation Data Sheet....36

Introduction

Pellet Quality:

Pellet quality is important, please read the following:

Your enviro pellet stove has been designed to burn wood pellets only. Do not use any other type of fuel, as this will void any warranties stated in this manual.

The performance of your pellet stove is greatly affected by the type and quality of wood pellets being burned. As the heat output of various quality wood pellets differs, so will the performance and heat output of the pellet stove.
CAUTION: It is important to select and use only pellets that are dry and free of dirt or any impurities such as high salt content. Dirty fuel will adversely affect the operation and performance of the unit and will void the warranty. The Pellet Fuel Industries (P.F.I.) has established standards for wood pellet manufacturers. We recommend the use of pellets that meet or exceed these standards. Ask your dealer for a recommended pellet type.

P.F.I. PELLET STANDARDS:

Fines (fine particles).....1% maximum through a 1/8" screen
Bulk Density.....40 pound per cubic foot minimum
Size.....¼" to 5/16" diameter ½ – 1½" long maximum
Ash Content.....1% maximum (Premium grade)
.....3% maximum (Standard grade)
Moisture Content.....8% maximum
Heat Content.....approximately 8200 Btu per pound minimum

ASH: The ash content of the fuel and operation of your stove will directly determine the frequency of cleaning. The use of high ash fuels may result in the stove needing to be cleaned daily. A low ash fuel may allow longer intervals between cleaning.

CLINKERING: [clinkers are silica (sand) or other impurities in the fuel that will form a hard mass during the burning process]. This hard mass will block the air flow through the Burn Pot Liner and affect the performance of the stove. Any fuel, even approved types, may tend to clinker. Check the Burn-Pot Liner daily to ensure that the holes are not blocked with clinkers. If they become blocked, remove the liner (when the unit is cold) and clean/scrape the clinkers out. Clean the holes with a small pointed object if required. Refer to the section Routine Cleaning and Maintenance.

PELLET FEED RATES: Due to different fuel densities and sizes, pellet feed rates may vary. This may require an adjustment to the slider damper setting or to the auger feed trim setting on low.

Since Sherwood Industries Ltd. has no control over the quality of pellets that you use, we assume no liability for your choice in wood pellets.

Store pellets at least 36" (1 m) away from the pellet stove.

Rating Label Location:

The rating label is located on the inside of the ash pan cover.

Introduction

Important Safety Data:

Please read this entire Owner's Manual before installing or operating your ENVIRO Pellet Stove. Failure to follow these instructions may result in property damage, bodily injury or even death. Contact your local building or fire official to obtain a permit and any information on installation restrictions and inspection requirements for your area.

To prevent the possibility of a fire, ensure that the appliance is properly installed by adhering to the installation instructions. An ENVIRO dealer will be happy to assist you in obtaining information with regards to your local building codes and installation restrictions.

Be sure to maintain the structural integrity of the home when passing a vent through walls, ceilings, or roofs.

The stove's exhaust system works with negative combustion chamber pressure and a slightly positive chimney pressure. It is very important to ensure that the exhaust system be sealed and airtight. The ash pan and viewing door must be locked securely for proper and safe operation of the pellet stove.

Do not burn with insufficient combustion air. A periodic check is recommended to ensure proper combustion air is admitted to the combustion chamber. Setting the proper combustion air is achieved by adjusting the slider damper located on the left side of the stove.

When installing the stove in a mobile home, it must be electrically grounded to the steel chassis of the home and bolted to the floor. Make sure that the structural integrity of the home is maintained and all construction meets local building codes.

Minor soot or creosote may accumulate when the stove is operated under incorrect conditions such as an extremely rich burn (black tipped, lazy orange flames).

If you have any questions with regard to your stove or the above-mentioned information, please feel free to contact your local dealer for further clarification and comments.

Safety Warnings And Recommendations:

Caution: Do not connect to any air distribution duct or system.
Do not burn garbage or flammable fluids such as gasoline, naptha or engine oil.
Unit hot while in operation. Keep children, clothing and furniture away. Contact may cause skin burns.

FUEL: This pellet stove is designed and approved to only burn wood pellet fuel with up to 3% ash content. Dirty fuel will adversely affect the operation and performance of the unit and may void the warranty. Check with your dealer for fuel recommendations.

THE USE OF CORDWOOD IS PROHIBITED BY LAW.

SOOT: Operation of the stove with insufficient combustion air will result in the formation of soot which will collect on the glass, the heat exchanger, the exhaust vent system, and may stain the outside of the house. This is a dangerous situation and is inefficient. Frequently check your stove and adjust the slider/damper as needed to ensure proper combustion. **See: "Slider/Damper Setting".**

CLEANING: There will be some build up of fly ash and small amounts of creosote in the exhaust. This will vary due to the ash content of the fuel used and the operation of the stove. It is advisable to inspect and clean the exhaust vent semi-annually or every two tons of pellets.

Introduction

ASHES: Disposed ashes should be placed in a metal container with a tight fitting lid. The closed container of ashes should be on a non-combustible floor on the ground, well away from all combustible materials pending final disposal. If the ashes are disposed of by burial in soil or otherwise locally dispensed, they should be retained in the closed container until all cinders have been thoroughly cooled.

ELECTRICAL: The use of a surge protected power bar is recommended. The unit must be grounded. The grounded electrical cord should be connected to a standard 115 volts (4.7 Amps), 60 hertz electrical outlet. Be careful that the electrical cord is not trapped under the appliance and that it is clear of any hot surfaces or sharp edges and also must be accessible. If this power cord should become damaged, a replacement power cord must be purchased from the manufacture or a qualified ENVIRO dealer. This unit's maximum power requirement is 540 watts.

GLASS: Do not abuse the glass by striking or slamming the door. Do not attempt to operate the stove with broken glass. The stove uses ceramic glass. Replacement glass must be purchased from an ENVIRO dealer. Do not attempt to open the door and clean the glass while the unit is in operation or if glass is hot. To clean the glass, use a soft cotton cloth and mild window cleaner, gas or wood stove glass cleaner, or take a damp paper towel and dip into the fly ash. This is a very mild abrasive and will not damage the glass.

FLAMMABLE LIQUIDS: Never use gasoline, gasoline-type lantern fuel, kerosene, charcoal lighter fluid, or similar liquids to start or "freshen up" a fire in the heater. Keep all such liquids well away from the heater while it is in use.

SMOKE DETECTOR: Smoke detectors should be installed and maintained in the structure when installing and operating a pellet burning appliance.

OPERATION: The ash pan and door must be closed securely for proper and safe operation of the pellet stove. Also ensure all gaskets on the door are checked and replaced when necessary.

KEEP ASH PAN FREE OF RAW FUEL.
DO NOT PLACE UNBURNED OR NEW PELLET FUEL IN ASH PAN. A fire in the ash pan may occur.

INSTALLATION: Be sure to maintain the structural integrity of your home when passing a vent through walls, ceilings, or roofs. It is recommended that the unit be secured into its position in order to avoid any displacement.
DO NOT INSTALL A FLUE DAMPER IN THE EXHAUST VENTING SYSTEM OF THIS UNIT.
DO NOT CONNECT THIS UNIT TO A CHIMNEY FLUE SERVING ANOTHER APPLIANCE.

FRESH AIR: Outside Fresh Air connection is optional. Must be connected to all units installed in Mobile and "Air Tight Homes" (R2000) or where required by local codes. Consider all large air moving devices when installing your unit and provide room air accordingly. Limited air for combustion may result in poor performance, smoking and other side effects of poor combustion.

If you have any questions with regards to your stove or the above-mentioned information, please feel free to contact your local dealer for further clarification and comments.

SINCE SHERWOOD INDUSTRIES LTD. HAS NO CONTROL OVER THE INSTALLATION OF YOUR STOVE, SHERWOOD INDUSTRIES LTD. GRANTS NO WARRANTY IMPLIED OR STATED FOR THE INSTALLATION OR MAINTENANCE OF YOUR STOVE. THEREFORE, SHERWOOD INDUSTRIES LTD. ASSUMES NO RESPONSIBILITY FOR ANY CONSEQUENTIAL DAMAGE(S).

SAVE THIS INSTRUCTION MANUAL FOR FUTURE REFERENCE

Operating Instructions

Control Board Functions:

1. **AUGER TRIM:** Used to change feed rates on LOW ONLY for poorer quality fuels. Push the Auger Trim button until the number 1 and 5 lights appear on the Heat Level Indicator. This will increase the feed rate to 4 seconds ON time Auger pulse. This is done only on LOW to allow the burning of poor quality fuels. Push the button until the number 1 and 4 lights appear, this will reduce the Auger On time to 2 second. This setting is for high-grade fuel only. Push the button until just the number 1 light is on, this is for a three (3) second on time (standard setting).

2. **CONVECTION BLOWER CONTROL:** Used to turn the convection blower ON/OFF. If the Blower is left off, and the sensor located on the air jacket reaches 160 °F (71 °C), the Convection blower will automatically come on HI speed to cool the unit. Leave the convection blower ON for peak efficiency

3. **AUGER PULSE LIGHT:** This light will flash in conjunction with the auger.

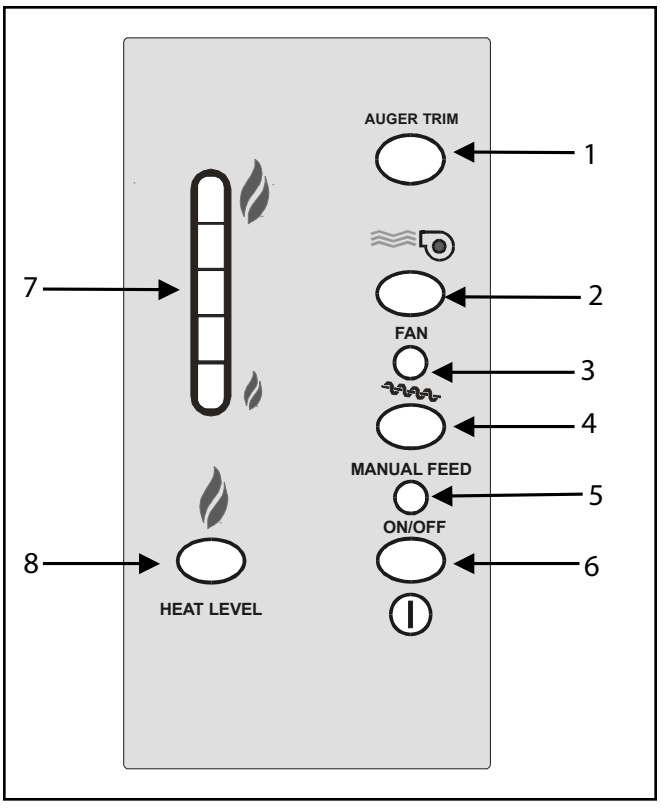

Figure 1: Circuit Board Control Panel Decal

4. **MANUAL AUGER FEED:** If the unit runs out of fuel, this button can be used to "prime the auger system". This button will turn off after 60 seconds and then must be released and pressed again.

5. **SYSTEM LIGHT:** Responsible for signaling the state of the control board. When the light is flashing during start-up, the stove is in an automatic start mode. When the light is solid, the Heat Level Setting can be altered.

6. **ON/OFF BUTTON:** Used to turn the unit ON and OFF.

7. **HEAT OUTPUT INDICATOR:** Shows the present heat output setting.
8. **HEAT LEVEL ADJUSTMENT:** When pressed, will change the heat setting of the unit from low to high.

Automatic Safety Features of Your Pellet Stove:

A. The stove will shut off when the fire goes out and the exhaust temperature drops below 120°F (49°C).
B. The stove has a high temperature safety switch. If the temperature on the hopper reaches 200°F (93°C), the auger will automatically stop and the stove will shut down when the exhaust temperature cools. If this happens, call your local dealer to reset the 200°F (93°C) high limit switch. **ALSO FIND THE REASONS WHY THE UNIT OVERHEATED.**

Operating Instructions

Operating Your Pellet Stove:

PRE-BURN INSTRUCTIONS: The burn pot liner holes must be clear and the liner installed properly against the ignitor tube for proper operation. Check the hopper for enough pellets to start the unit.

DO NOT OPERATE THE UNIT WITH THE DOOR OR ASH PAN AJAR.

MANUAL MODE:

To START: Press the ON / OFF button. The stove will turn on. The system light will flash. The Auger Light will flash with each pulse of the auger (the Auger Feed Rate is pre-programmed during start-up). The Heat Level Indicator will show the Heat Level that the stove will run at after start-up.

If this is the first time the unit has been started or the unit has run out of fuel, the auger will need to be primed. Press the Manual Auger Feed button until fuel starts to drop into the Burn Pot Liner (see "Operating Instructions; Stove Controls").

To OPERATE: When a fire has been established, the System Light will turn solid (after approximately 10 - 15 minutes) and the Auger Light will continue to flash to the corresponding Heat Level setting. The Heat Level button can now be pressed at this time to change the desired Heat Level Output setting.

The convection blower (room air blower) will turn on. The speed of this blower is controlled by the setting of the heat level output indicator. The convection blower can be turned OFF by depressing the convection blower control button. When the air jacket reaches 160 °F (71 °C) the convection blower will come ON High, cooling the unit. For the best efficiency and to prevent cycling, the convection blower should be left on at all times.

When operating on LOW HEAT LEVEL, the feed rate can be adjusted, using the auger trim, for different quality fuels. These settings can be used if the fire keeps going out on low (poor quality fuel). Or if the low setting is too hot for the room (see "Operating Instructions; Stove Controls - Circuit Board").

THERMOSTAT / SWITCH MODE:

INITIAL START-UP: See above

OPERATION - HI / LOW mode: When the thermostat contacts are closed the stove settings are adjustable as per Manual Mode (see above). When the thermostat contacts open, the circuit board will take control of the settings. The stove will drop down to a low burn until the thermostat contacts close again. This low burn setting can be adjusted for different fuel qualities (see "Operating Instructions; Stove Controls - Circuit Board"). The stove will come back to the previous HEAT LEVEL setting when the thermostat contacts close again.

OPERATION – ON / OFF mode: When the thermostat contacts close, the unit will light automatically. Once up to temperature, the stove operates the same as in manual mode (see above). When the thermostat contacts open, the unit automatically begins its shutdown routine. The stove will re-light when the thermostat contacts close again.

Turning Your Pellet Stove Off:

- MANUAL and HI / LOW mode: To turn the unit OFF, simply press the ON / OFF button. This will stop the feed of pellets. The blowers will continue to operate and cool the stove down. When cool enough, the stove will turn off.
- ON / OFF mode: To turn the unit OFF, turn the thermostat down or off.

DO NOT unplug unit while Combustion fan is operating.
This may lead to smoke escaping from the stove.

Routine Cleaning and Maintenance

The following list of components should be inspected and maintained routinely to ensure that the appliance is operating at its' optimum and giving you excellent heat value:

2-3 Days / Weekly	Bi-annually or 2 Tons of Fuel
Burn Pot and Liner	Exhaust Vent
Heat Exchanger Tubes	Fresh Air Intake Tube
Ash Pan	Blower Mechanisms
Door Glass	Heat Exchanger Tubes
Inside Firebox	Behind Firebox Liners
Ash Pan and Door Gaskets	All Hinges
Door Latch	Post Season Clean-up

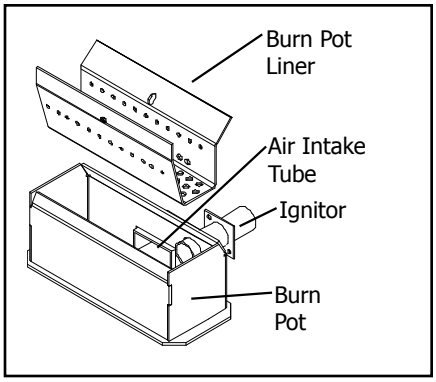

Figure 2: EF5 Burn pot and Liner

TOOLS REQUIRED TO CLEAN UNIT:
Torx T-20 Screwdriver, $^{5}/_{16}$" wrench or socket, Brush, Soft Cloth, Vacuum with fine filter bag

BURNER POT AND LINER (2-3 days)
To remove the burn pot and burn pot liner, open the door using the door handle provided (located on the left-hand side of the stove). Swing the door open. Lift the liner from the burn pot. Lift the burn pot from the firebox by gently lifting up the front of the burn pot, then sliding the assembly from the air intake tube and the ignitor cartridge.

This is the 'pot' where the pellets are burned. Every two to three days (when the unit is cold), remove the burn-pot liner from the stove. Using a metal scrapper, remove material that has accumulated or is clogging the liner's holes. Then dispose of the scrapped ashes from the liner and from inside the burn-pot. Place the burn-pot back into the stove, making sure that the pipes are properly inserted into the burn pot. Place the liner back into the burn-pot, making sure that the ignitor hole in the liner is aligned with the ignitor tube. Pushing the liner up against the ignitor tube.

If, after long periods of burning, the fire continually builds up and overflows the burn pot or there is a build up of clinkers, this is an indication that the pellet fuel quality is poor or the stove may need cleaning. Check the stove for ash build up (clean if required) and adjust the slider / damper to produce the proper clean combustion.

HEAT EXCHANGER TUBES (2-3 days)
A handle is located under the unit top, in the center of the stove just above the door (shown in Figure 3). This handle is to be pulled up and down a few times (ONLY WHEN THE UNIT IS COLD) in order to clean away any fly ash that may have collected on the heat exchanger tubes. As different types of pellets produce different amounts of ash, cleaning of the tubes should be done on a regular basis to enable the unit to run efficiently.

ASH PAN AND DOOR GASKETS (weekly)
After extended use the gasketing may come loose. To repair this, glue the gasketing on using high-temperature fiberglass gasket glue available from your local dealer. This is important to maintain an airtight assembly.

Routine Cleaning and Maintenance

ASH PAN (weekly)
This part is located under the burner, in the pedestal, and has a latching mechanism to secure it. To remove the ash pan, open the cover from the right hand side, unlock the latch on the pedestal cover and pull the pan out. Dump the ashes into a metal container stored away from combustibles. Monitor the ash level every week. Remember that different pellet fuels will have different ash contents. Ash content is a good indication of fuel efficiency and quality. Refer to "Warnings and Recommendations" for disposal of ashes. Vacuum the inside of the ash pan compartment inside the pedestal including the hole at the top back of the compartment. Replace the ash pan and close pedestal door. **DO NOT PLACE UNBURNED OR RAW PELLET FUEL IN ASH PAN.**

DOOR GLASS CLEANING (2-3 days)
Cleaning of the glass must only be done when stove is cold. Open the door by lifting the handle. The glass can be cleaned by wiping down the outside and inside of the glass with a dry soft cloth.
If the glass has build up that can not be removed with only the cloth, clean the glass using paper towel and a gas appliance glass cleaner, this may be purchased through most dealers. If a gas appliance glass cleaner is not available, use a damp paper towel dipped in fly ash to clean the glass. After the glass has been cleaned use the dry soft cloth to wiping down the outside and inside of the glass.

FRESH AIR INTAKE (biannually)
Inspect periodically to be sure that it is not clogged with any foreign materials.

EXHAUST PASSAGES (biannually)
Removal of the firebox backing for bi-annual cleaning

- Open the door by lifting the handle, remove the burn pot and burn pot liner.
- Lubricate all screws with penetrating oil.
- Remove the four (4) screws that hold the side panels in place.
- With the tip of a flat screwdriver, gently lift up the side panels and remove the side panels.
- Pull the center panel out.
- Vacuum thoroughly.

Installation of firebox backing:

- Insert center panel.
- Place the side panels back into the firebox and re-install the two (2) screws on each side.
- Replace the glass door and secure.
- Clean thoroughly.

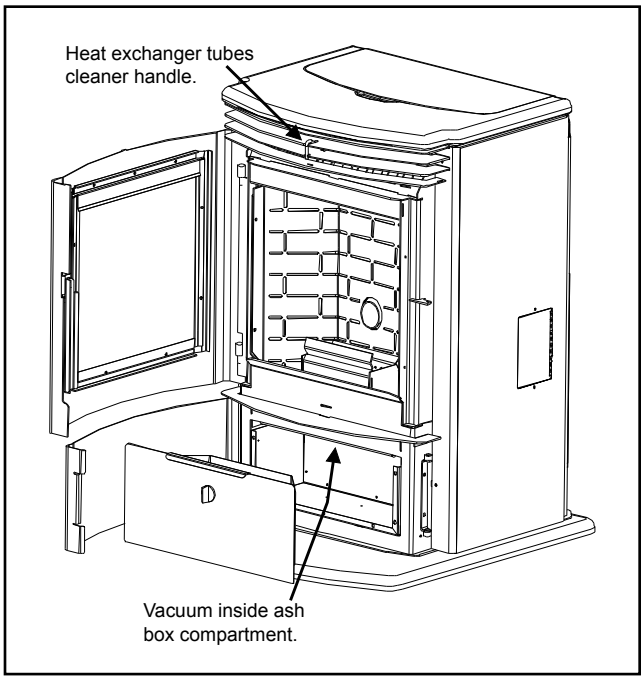

Figure 3: EF5 Open

Routine Cleaning and Maintenance

EXHAUST VENT (biannually)
This vent should be cleaned every year or after two tons of pellets. We recommend contacting your dealer for professional cleaning. To clean the vent pipe, tap lightly on the pipe to dislodge any loose ash. Open the bottom of the "T" to dump the ash, then vacuum as much of the ash out of the vent pipe as possible.

BLOWER MECHANISMS (season)

Unplug the stove then open the right and left side panels to access the two blowers. Vacuum all dust from motors. Only the convection blower motor (on the right side of the stove) will require lubrication. The convection motor has two lubrication holes on it. Use two (2) drops of SAE 20 light oil to lubricate every six (6) months. Excess oil may damage the motor. The exhaust blower's motor has sealed bearings, DO NOT lubricate this motor. Check gaskets and replace if needed.

POST SEASON CLEAN-UP
Once you are finished using the pellet appliance for the season, unplug the stove for added electrical protection. It is very important that the stove be cleaned and serviced as stated above.

CLEANING PLATED SURFACES
Please clean all fingerprints off of all plated parts, with denatured alcohol on a soft cloth, before firing the unit each time. Fingerprints, etc. can become permanently etched into the plating if not removed before operating the pellet heater.

BRICK PANEL
The paint on the steel brick panel may peel. This is due to extreme conditions applied to the paint and is in no way covered by warranty.

DOOR GLASS REPLACEMENT
It is recommended that your dealer replace the glass if broken. The door glass is made of high temperature PYRO CERAMIC. To replace the glass, unscrew and remove the four glass retainers. Remove the glass and any broken pieces. High temperature fiberglass tape should be used around the glass. Replace the glass by securing the glass retainers back to the frame ensure the glass is seated in the bottom glass retainer. The use of substitute materials is prohibited use only part 20-023.

Installation

Deciding Where to Locate your Pellet Appliance:

1. Check clearances to combustibles.
2. Do not obtain combustion air from an attic, garage or any unventilated space. Combustion air may be obtained from a ventilated crawlspace.
3. Do not install the stove in a bedroom.
4. You can vent the stove through an exterior wall behind the unit or connect it to an existing masonry or metal chimney (must be lined if the chimney is over 6" (15 cm) diameter, or over 28 inches² (180 cm²) cross sectional area). An interior vent can be used with approved pipe passing through the ceiling and roof.
5. Locate the stove in a large and open room that is centrally located in the house. This will optimize heat circulation.
6. The power cord is 8 feet (2.43 m) long and may require a grounded extension cord to reach the nearest electrical outlet.

Removing Pellet Stove From Pallet:

1. Remove the right and left hand cabinet sides by loosening the three (3) T-20 Torx screws on the back of the each panel.

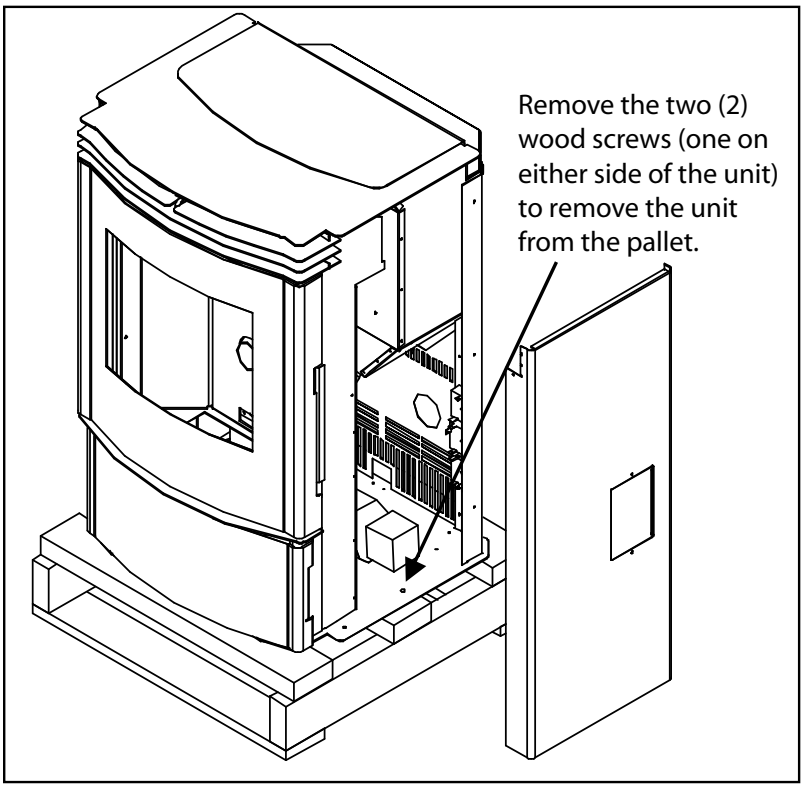

Figure 4: Screws to take out to remove stove from pallet.

2. Remove the one (1) screw located on the front of the cabinet side, behind the top louvers and one (1) screw behind the ash door.
3. Remove the two (2) wood screws that are holding the bottom of the stove to the pallet.
4. Close the side panels.

Appliance Dimensions:

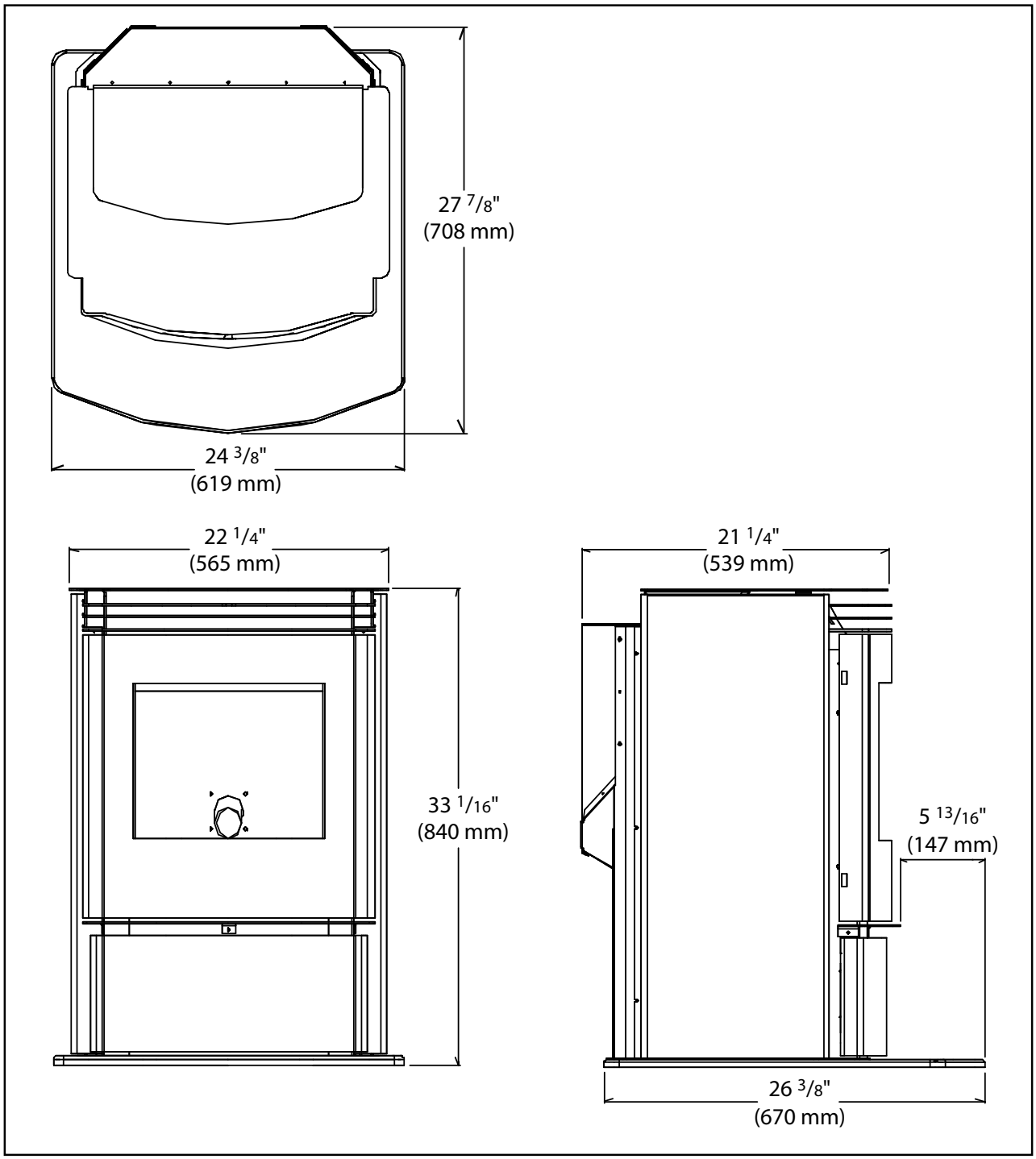

Figure 5: Dimensions of EF5.

Installation

Clearances to Combustibles:

This unit can be installed on a combustible floor due to the built in pedestal hearth pad (for example linoleum, hardwood flooring). If this unit is to be installed onto a carpeted surface, a hearth pad must be used for stability.

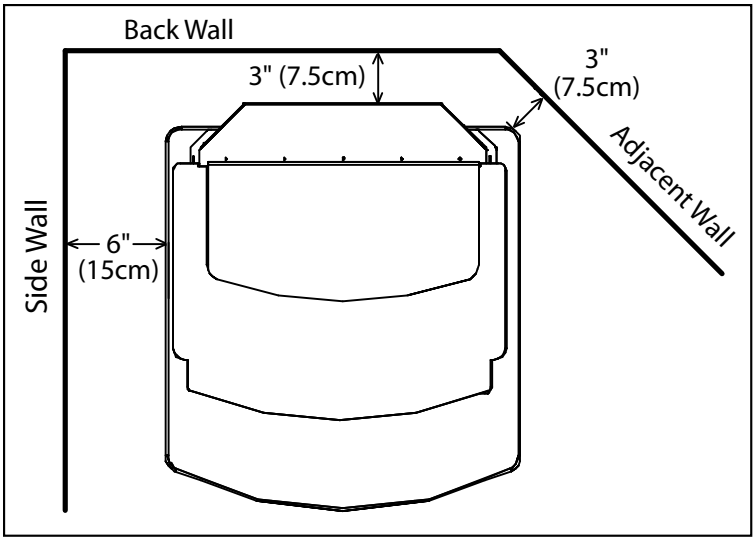

Figure 6: EF5 Clearance to Combustibles.

These dimensions are minimum clearances but it is recommended that you ensure sufficient room for serving, routine cleaning and maintenance.

Side wall to unit	6 inches	(15 cm)
Back wall to unit	3 inches	(7.5 cm)
Corner to unit	3 inches	(7.5 cm)

Alcove Clearances:

This unit may be installed in an alcove. Maintain these clearances to combustibles.

Minimum Alcove width	48 inches	(122 cm)
Minimum Alcove height	48 inches	(122 cm)
Minimum Alcove depth	48 inches	(122 cm)

Install vent at clearances specified by the vent manufacturer.

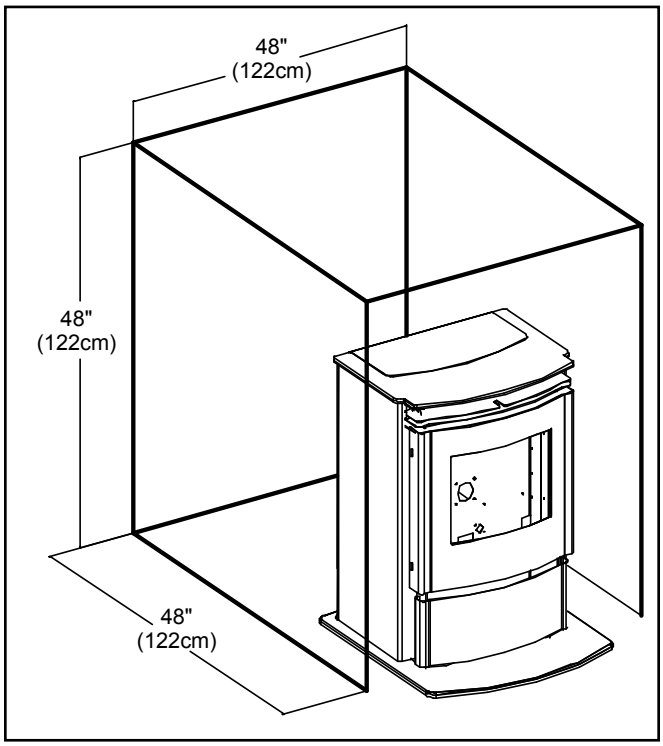

Figure 7: EF5 Minimum Alcove Size.

Hearth Pad Pedestal Installation:

Carefully place the back of the pellet appliance on the pallet and install the hearth pad. Align the holes in the hearth pad and the unit and install the four (4) screws provided.

Place the unit on its back and install the hearth pad using the four screws provided

This unit can be installed on a combustible floor due to the built in pedestal hearth pad (for example linoleum, hardwood flooring). If this unit is to be installed onto a carpeted surface, a hearth pad must be used for stability.

This unit is supplied with four (4) leveling legs for uneven surfaces. Adjust these leveling legs until unit is level.

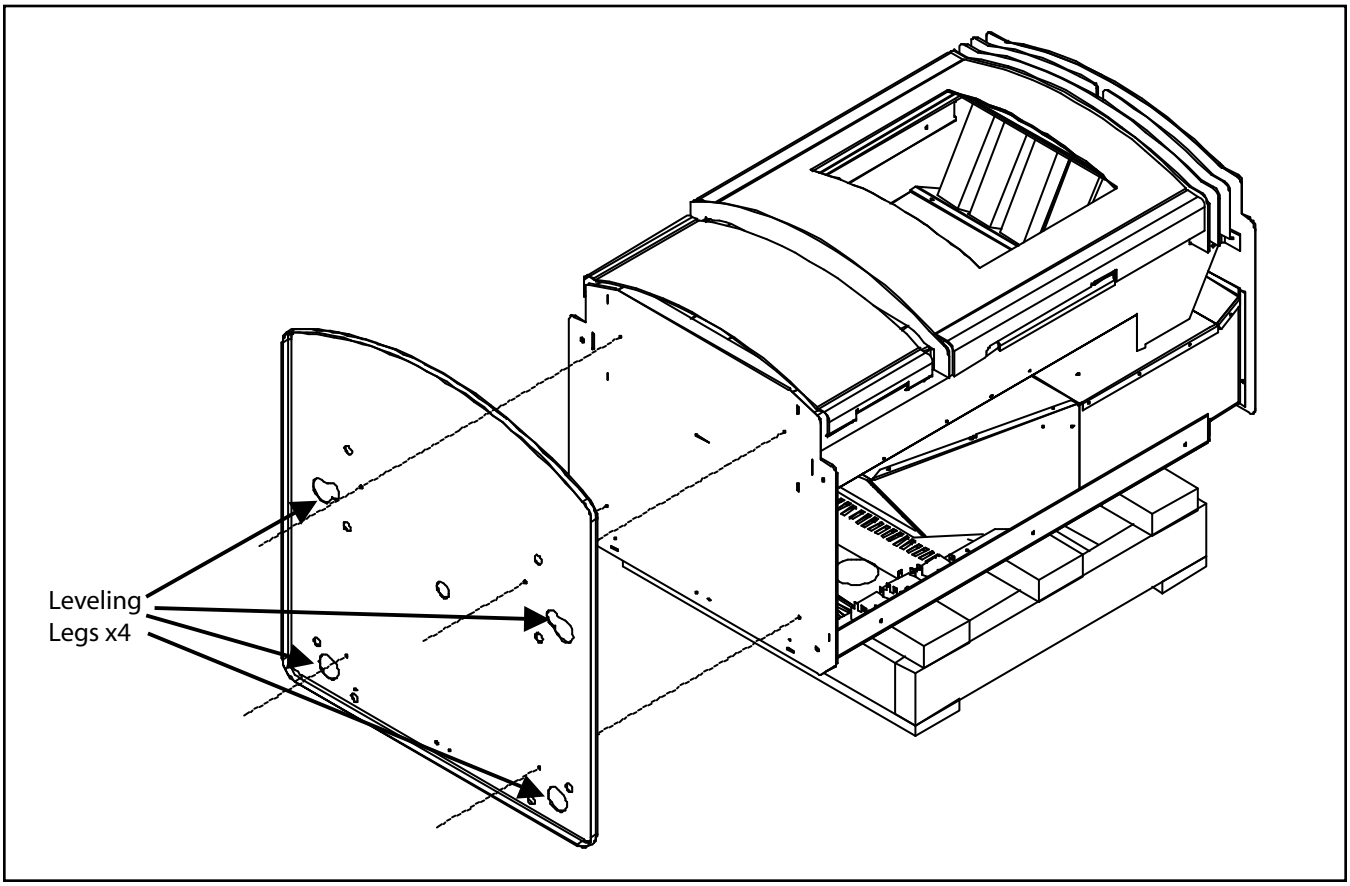

Figure 8: Installing Hearth Pad Pedestal onto EF5.

VENT TERMINATION REQUIREMENTS:

IT IS RECOMMENDED THAT YOUR PELLET STOVE BE INSTALLED BY AN AUTHORIZED DEALER/INSTALLER.

Table 1: Use in conjunction with Figure 9 for allowable exterior vent termination locations.

Letter	Minimum Clearance	Description
A	24 in (61 cm)	Above grass, top of plants, wood, or any other combustible materials.
B	48 in (122 cm)	From beside/below any door or window that may be opened.
C	24 in (61 cm)	From above any door or window that may be opened.
D	24 in (61 cm)	To any adjacent building, fences and protruding parts of the structure.
E	24 in (61 cm)	Below any eave or roof overhang
F	12 in (30 cm)	To outside corner.
G	12 in (30 cm)	To inside corner, combustible wall (vertical and horizontal terminations).
H	3 ft (91 cm) within a height of 15 ft (4.5 m) above the meter/regulator assembly	To each side of center line extended above natural gas or propane meter/regulator assembly or mechanical vent.
I	3 ft (91 cm)	From any forced air intake of other appliance
J	12 in (30 cm)	Clearance to non-mechanical air supply inlet to building, or the combustion air inlet to any appliance.
K	24 in (61 cm)	Clearance above roof line for vertical terminations.
L	7 ft (2.13 m)	Clearance above paved sidewalk or paved driveway located on public property.

1. Do not terminate the vent in any enclosed or semi-enclosed areas such as a carport, garage, attic, crawlspace, narrow walkway, closely fenced area, under a sundeck or porch, or any location that can build up a concentration of fumes such as stairwells, covered breezeway, etc.

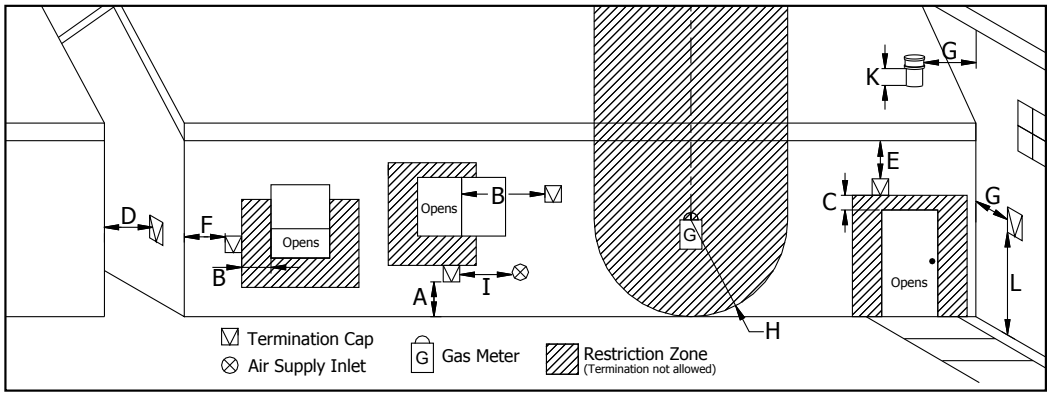

Figure 9: Use in conjunction with Table 1 for allowable exterior vent termination locations.

2. Vent surfaces can become hot enough to cause burns if touched by children. Non-combustible shielding or guards may be required.
3. Termination must exhaust above the inlet elevation. It is recommended that at least five feet of vertical pipe be installed outside when the appliance is vented directly through a wall, to create some natural draft to prevent the possibility of smoke or odor during appliance shut down or power failure. This will keep exhaust from causing a nuisance or hazard from exposing people or shrubs to high temperatures. In any case, the safest and preferred venting method is to extend the vent through the roof vertically.
4. Distance from the bottom of the termination and grade is 12" (30 cm) minimum. This is conditional upon the plants and nature of grade surface. The exhaust gases are hot enough to ignite grass, plants and shrubs located in the vicinity of termination. The grade surface must not be lawn.
5. If the unit is incorrectly vented or the air to fuel mixture is out of balance, a slight discoloration of the exterior of the house might occur. Since these factors are beyond the control of Sherwood Industries Ltd, we grant no guarantee against such incidents.

NOTE: Venting terminals shall not be recessed into walls or siding.

Outside Fresh-Air Connection:

Outside fresh air is mandatory when installing this unit in airtight homes and mobile homes.

A Fresh-air intake is strongly recommended for all installations. Failure to install intake air may result in improper combustion as well as the unit smoking during power failures.

When connecting to an outside fresh air source, do not use plastic or combustible pipe. A 1⅝" minimum (42 mm) ID (inside diameter) steel, aluminum or copper pipe should be used. It is recommended, when you are installing a fresh air system, to keep the number of bends in the pipe to a minimum.

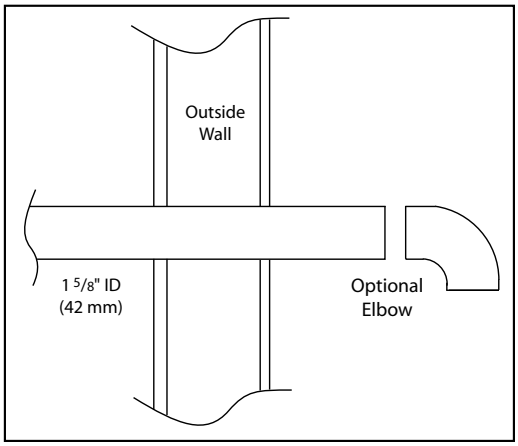

Figure 10: Outside Air Connection.

Exhaust And Fresh Air Intake Locations:

EXHAUST		
Base of unit to center of flue	10 15/16"	(278 mm)
Center of unit to center of flue	1 3/8"	(35 mm)
FRESH AIR INTAKE.		
Base of unit to center of intake	8 15/16"	(227 mm)
Center of unit to center of intake	4⅛"	(105 mm)

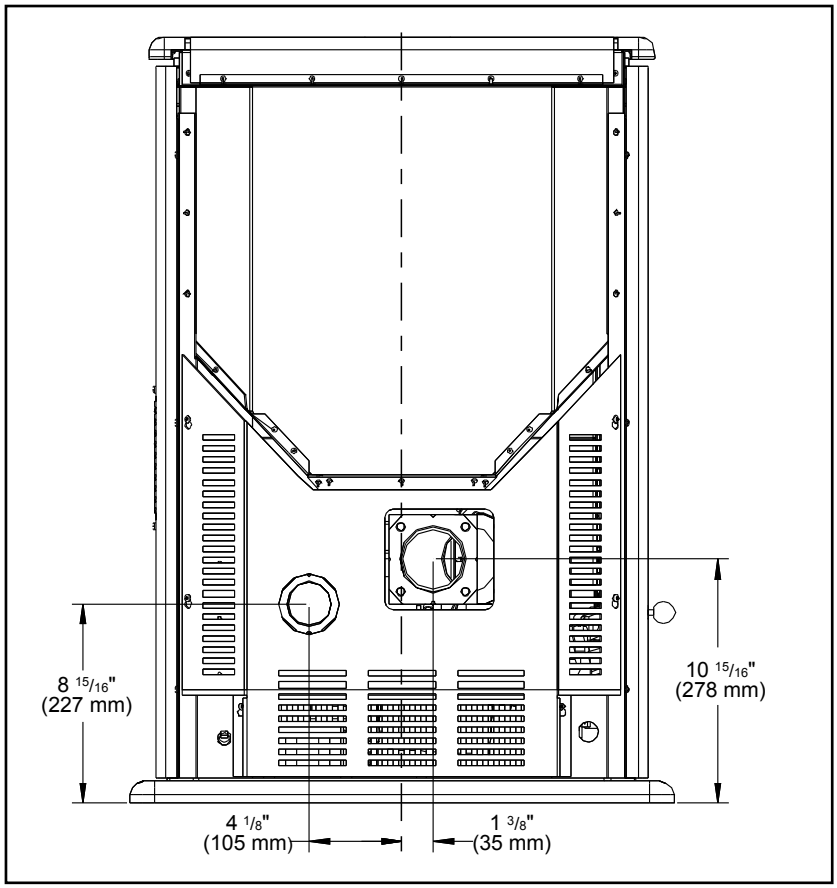

Figure 11: EF5 Inlet and Outlet Location.

MOBILE HOME INSTALLATION:

- Secure the heater to the floor using the two holes in the pedestal.
- Ensure the unit is electrically grounded to the chassis of your home (permanently).
- Do not install in a room people sleep in.
- Outside fresh air is mandatory. Secure outside air connections directly to fresh air intake pipe and secure with three (3) screws evenly spaced.

CAUTION: THE STRUCTURAL INTEGRITY OF THE MANUFACTURED HOME FLOOR, WALL AND CEILING/ROOF MUST BE MAINTAINED.

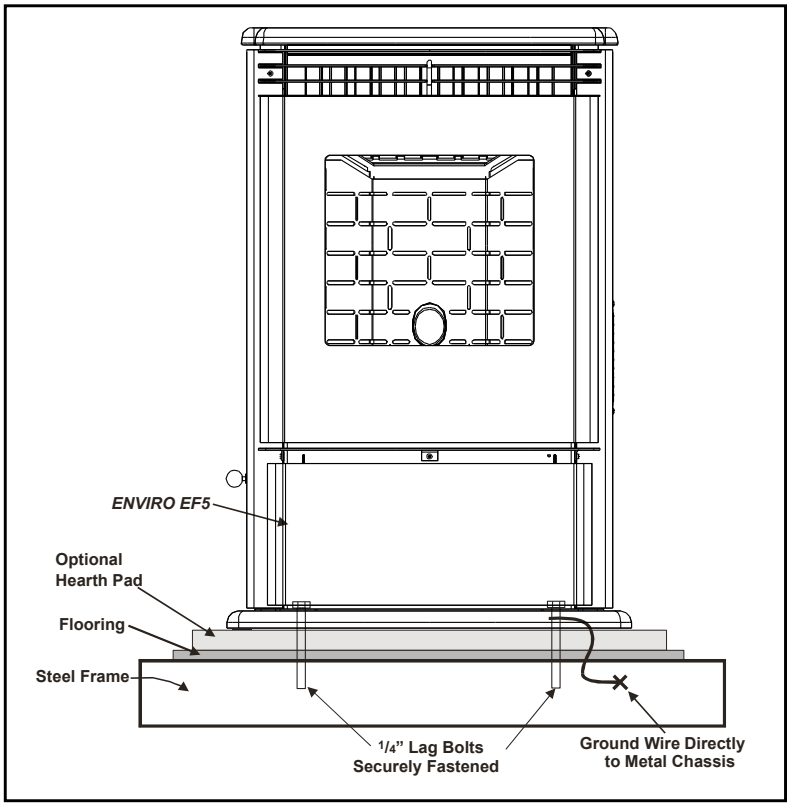

Figure 12: Mobile home installation.

CORNER THROUGH WALL INSTALLATION:

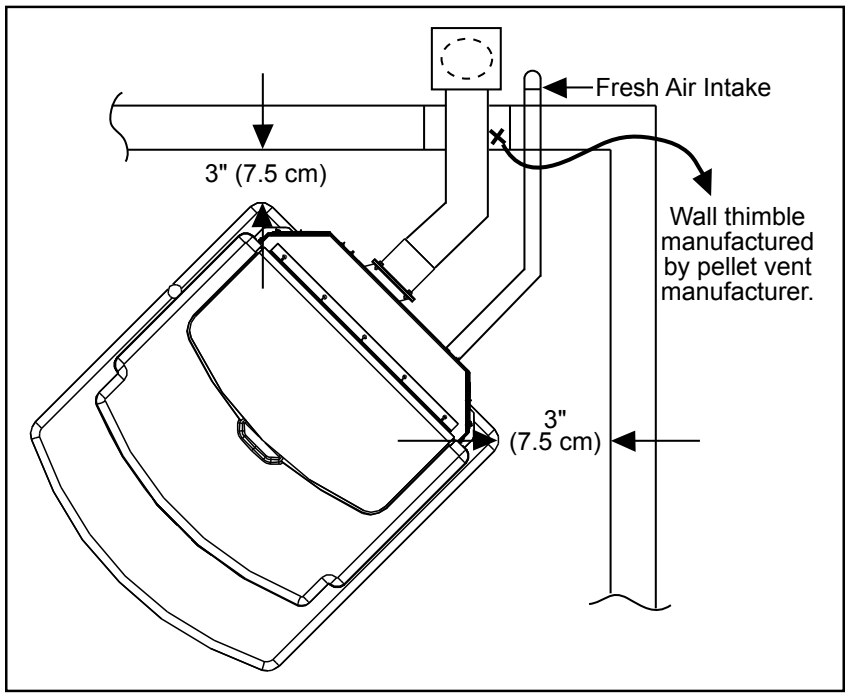

Figure 13: Corner Installation.

HORIZONTAL EXHAUST THROUGH WALL INSTALLATION:

Vent installation: install vent at clearances specified by the vent manufacturer.
A chimney connector shall not pass through an attic or roof space, closet or similar concealed spaces, or a floor, or ceiling. Where passage through a wall or partition of combustible construction is desired, the installation shall conform to CAN/CSA-B365 Installation Code for Solid-Fuel-Burning Appliances and Equipment. Only use venting of L or PL type with an inside diameter of 3 or 4 inches (7.6 or 10.1 cm).

1. Choose a location for your stove that meets the requirements stated in this manual and allows installation with the least amount of interference to house framing, plumbing, wiring, etc.
2. Install a non-combustible hearth pad (where necessary).
3. Place the appliance 15" (37.5 cm) away from the wall. If the stove is to be set on a hearth pad, set the unit on it.
4. Locate the center of the exhaust pipe on the stove. Extend that line to the wall. Once you have located the center point on the wall, refer to pellet vent manufacturer installation instructions for correct hole size and clearance to combustibles.
5. Install the wall thimble as per the instructions written on the thimble. Maintain an effective vapour barrier in accordance with local building codes.
6. Install a length of 3" (76 mm) or 4" (101 mm) vent pipe into the wall thimble. The pipe should install easily into the thimble.
7. Install the fresh air intake (see OUTSIDE FRESH AIR CONNECTION).
8. Connect the exhaust vent pipe to the exhaust pipe on the stove. Seal the connection with high temperature silicone.
9. Push the stove straight back, leaving a minimum of 2" (5 cm) clearance from the back of the stove to the wall. Seal the vent pipe to the thimble with high temperature silicone.
10. The pipe must extend at least 12" (30 cm) away from the building. If necessary, bring another length of pipe (PL type) to the outside of the home to connect to the first section. Do not forget to place high temperature silicone around the pipe that passes through the thimble.
11. Install a vertical pipe, or if all requirements for direct venting are met, install vent termination. The stainless steel cap termination manufactured by the vent manufacturer is recommended. However, when the vent terminates several feet above ground level and there are no trees, plants, etc. within several feet, a 45° elbow can be used as termination. The elbow must be turned down to prevent rain from entering.

NOTE:

- Some horizontal through wall installations may require a "T" and 3 to 5 feet (91 to 152 cm) of vertical pipe outside the building to help naturally draft in the unit.
- This may be required if a proper burn cannot be maintained, after the stove has been tested and the airflow set.
- This is due to the back pressure in the exhaust caused by airflow around the structure.
- All sections of pipe must have three (3) screws evenly spaced and all horizontal and vertical vent sections located within the house must have a bead of high temperature silicone installed on the male end of the pipe before installation to create a gas tight seal.

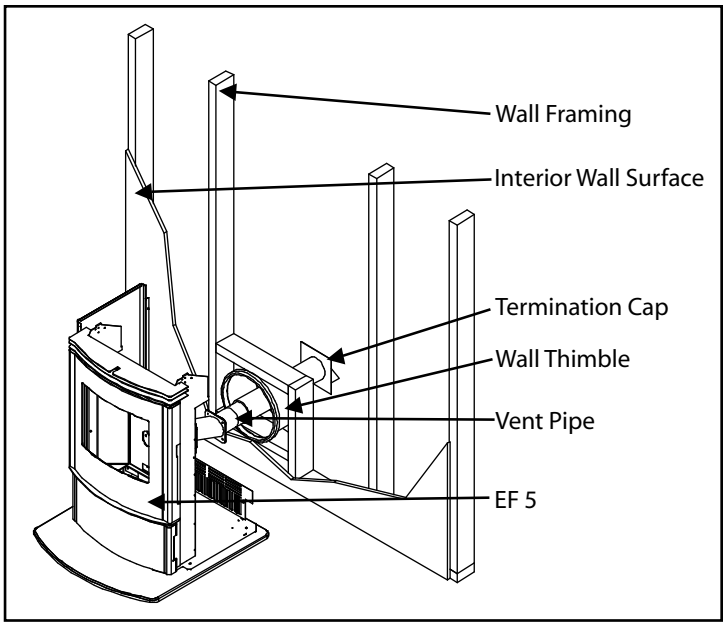

Figure 14: Straight through wall Installation.

Through Wall With Vertical Rise and Horizontal Termination Installation- Recommended:

A 45° elbow with a rodent screen may be used in place of the termination cap (or stainless steel termination hood).

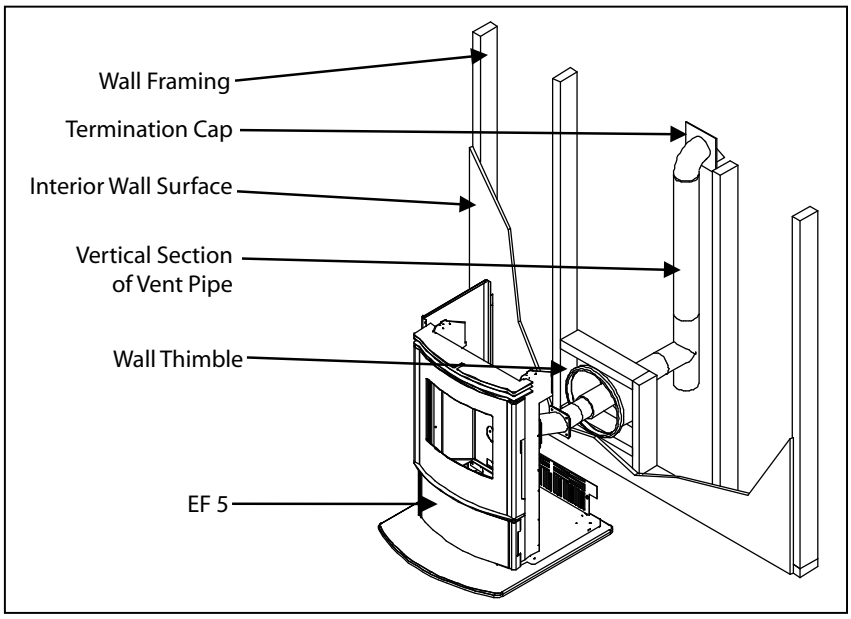

Figure 15: Venting horizontally with rise.

Through Concrete Wall With Vertical Rise Installations:

A 45° elbow with a rodent screen may be used in place of the termination cap (or stainless steel termination hood).

Installation to use if there is a concrete or retaining wall in line with exhaust vent on pellet stove.

The termination must be 12 inches (30 cm) from the outside wall and 12 inches (30 cm) above the ground.

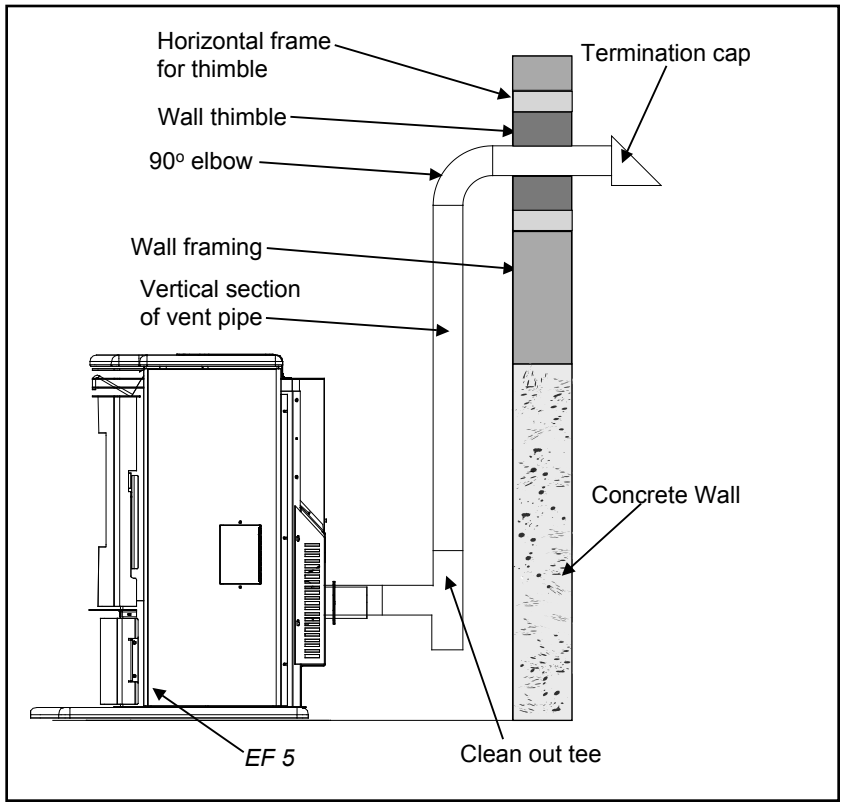

Figure 16: Venting with concrete wall behind unit .

Inside Vertical Installations:

1. Choose a stove location that is ideal. See the section "Deciding Where to Locate your Pellet Appliance."
2. Place a non-combustible hearth pad where necessary.
3. Place the unit on the hearth pad (if installed on a carpeted surface) and space the unit in a manner so when the pellet vent is installed vertically, it will be 3" (7.6 cm) away from a combustible wall.
4. Locate the center of the fresh air intake pipe on the unit. Match that center with the same point on the wall and cut a hole about 1 ⅝" (41 mm) in diameter.
5. Install the fresh air intake pipe.
6. Install the tee with clean out.
7. Install the pellet vent upward from there. When you reach the ceiling, make sure that the vent goes through the ceiling fire stop. Maintain a 3" (7.6 cm) distance to combustibles and keep attic insulation away from the vent pipe. Maintain an effective vapor barrier.
8. Finally, extend the pellet vent to go through the roof flashing.
9. Ensure that the rain cap is approximately 36" (900 mm) above the roof.

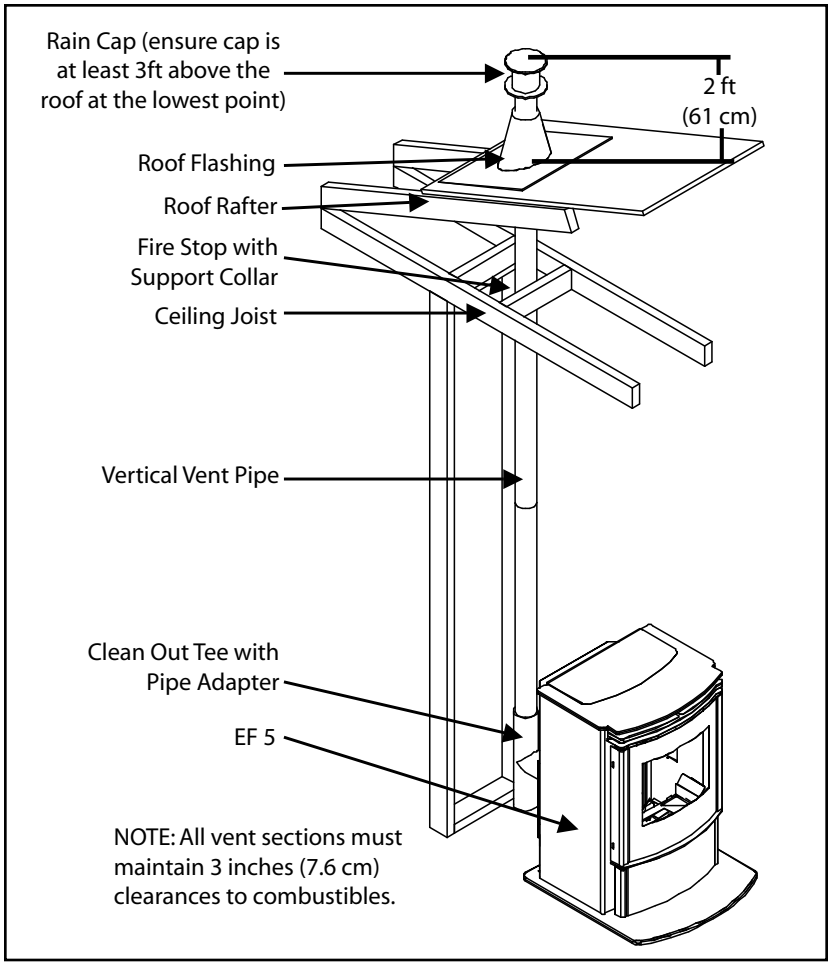

Figure 17: Inside Vertical Installation.

Outside Vertical Installations:

To accomplish a outside vertical pipe installation, follow steps 1 through 5 in the "Inside Vertical Installations - Freestanding" section and then finish it by performing the following (refer to Figure 18).

1. Install a tee with clean out on the outside of the house.
2. Install PL vent upward from the tee. Make sure that you install support brackets to keep the vent straight and secure.
3. Install ceiling thimble and secure the flashing as you go through the roof.
4. Ensure that the rain cap is approximately 36" (91.5 cm) above the roof.

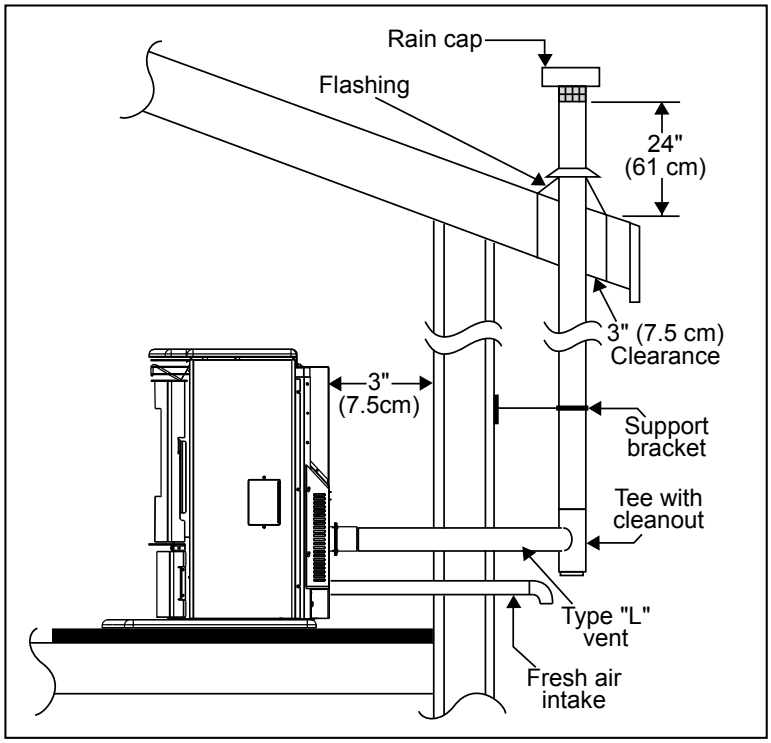

Figure 18: Outside Vertical Installation.

Hearth Mount Installation:

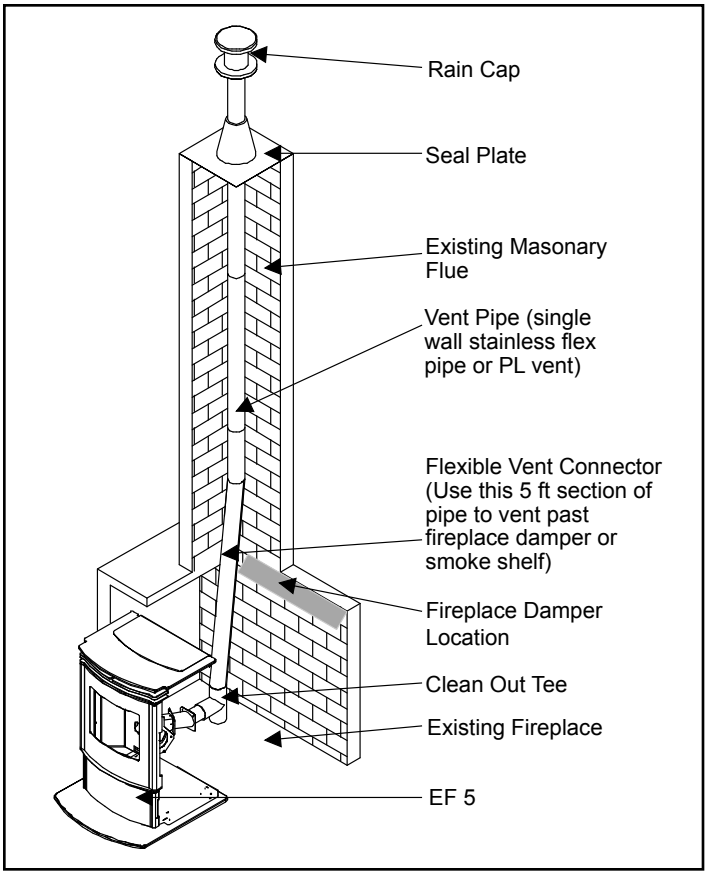

Figure 19: Hearth mount installation.

Refer to Figures 19.

1. Lock fireplace damper in the open position.
2. Install a positive flue connector at the fireplace dampers.
3. Connect a tee or a 90° elbow to the exhaust pipe.
4. Install flexible stainless steel liner or listed pellet vent to the top of the chimney.

Exterior Mounted Exhaust Blower:

The EF5 can be equipped with an externally mounted exhaust blower. This optional kit includes all components necessary to install the exhaust blower on any vertical wall surface.

Choose a location for your stove that meets the requirements stated in your manual and allows installation with the least amount of interference with house framing, plumbing, wiring, etc.

Included in the Exterior Mounted Exhaust Blower Kit are:
1 - Exhaust blower housing box.
1 - Blower cover plate.
1 - Hardware bag

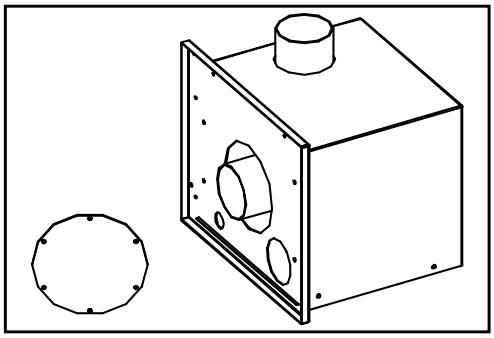

Figure 20: Exterior Blower Kit.

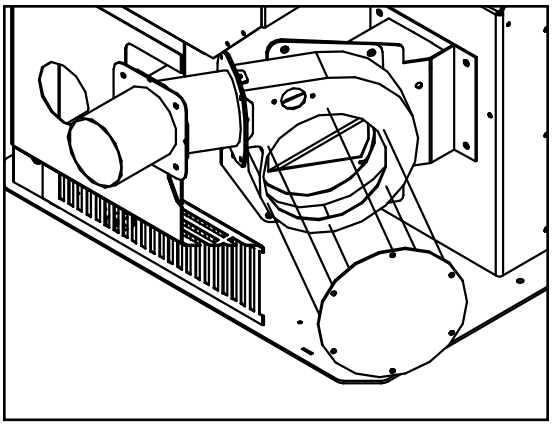

Figure 21: Exterior Blower Kit.

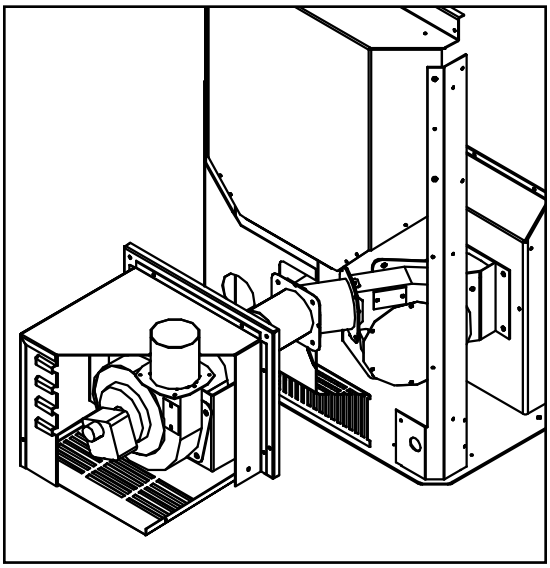

Figure 22: Exterior Blower Kit cut-through.

1. Remove the left hand cabinet side by removing the two (2) screws down the front. Loosen the three screws on the back of the cabinet side and remove panel.
2. Loosen the six (6) screws that hold the back grill in place. Lift the back grill off the screws.
3. Disconnect the Exhaust blower wires from the wire harness. Remove the exhaust blower motor from the housing; six (6) screws. Cover hole in housing with cover plate provided (see Figure 21).
4. Remove the cover from the exhaust blower housing box.
5. Install the exhaust blower housing box into the pipe placed through the wall thimble, seal with high temperature silicone. Fasten the box to the wall with (4) four screws, seal edges of box to wall with clear silicone.
6. Drill a hole through the wall thimble plate for the electrical wires. Pass the armored cable through the wall thimble. Use the strain relief provided. **Do not pass cable through vent hole.**
7. Install the Exhaust Blower motor into the external exhaust blower housing box. Make the electrical connections to the wire harness and exhaust blower.
8. Replace the cover on the Exhaust Box and the back grill of the stove and ensure the screws are tightened down.
9. Install vertical pipe as instructed in appropriate section.

Typical Through Wall With Exterior Blower Kit Installation - Horizontal Termination:

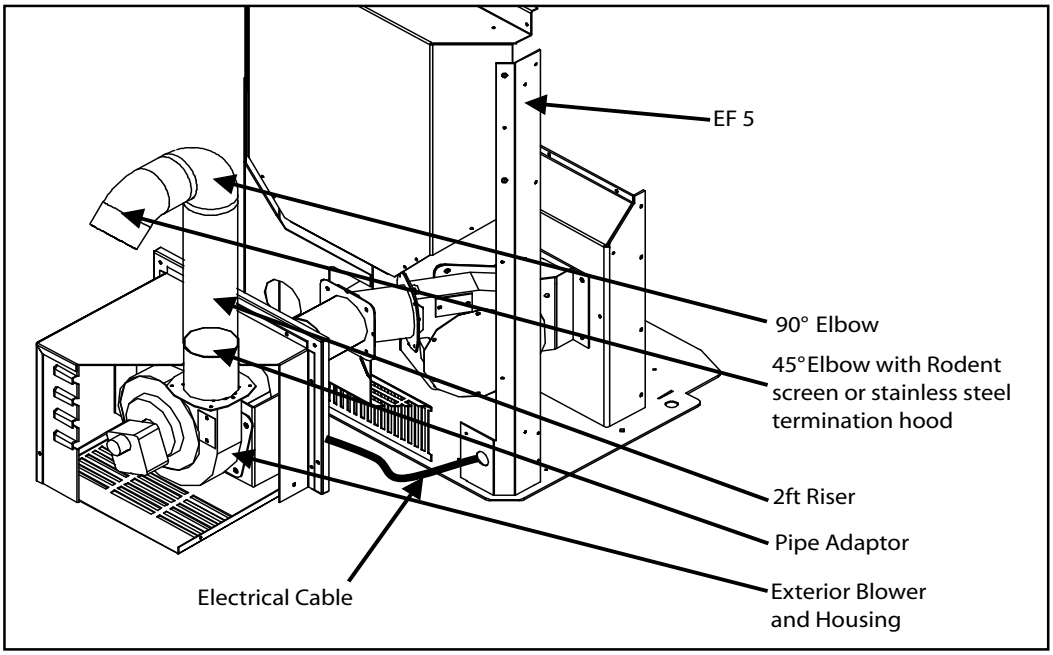

Figure 23: Through Wall Installation with Exterior Blower Kit.

NOTE:
Ensure that all vent connections are installed by placing a small bead of high temperature silicone at each chimney connection.
Also ensure that all vertical vent sections are properly supported and that all clearances to combustibles are maintained in accordance with the vent manufacturer's specifications.

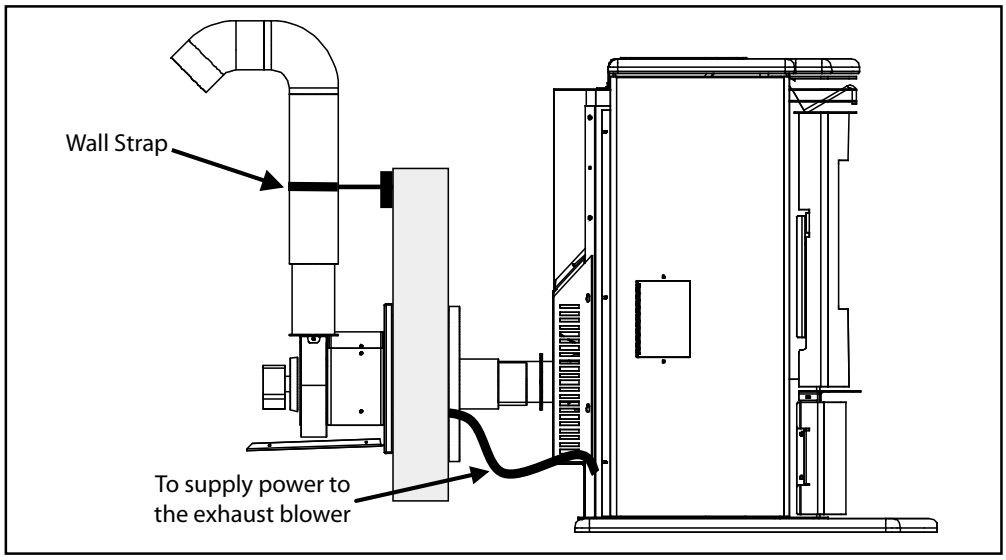

Figure 24: Through Wall Installation with Exterior Blower Kit; Side View.

Install an amour coated electrical cable from the exhaust blower housing, through the wall thimble plate and attach to the pre drilled hole in the left hand rear hopper pillar. Hook up to wires from the exhaust blower wiring harness.

All electrical connections must be in accordance to local code requirements

Typical Through Wall With Exterior Blower Kit Installation - Vertical Termination:

Follow the previous pages for through wall installations. Ensure that vent pipe is properly secured to wall using wall straps. Maintain clearances to combustibles on vent pipe as well as unit.

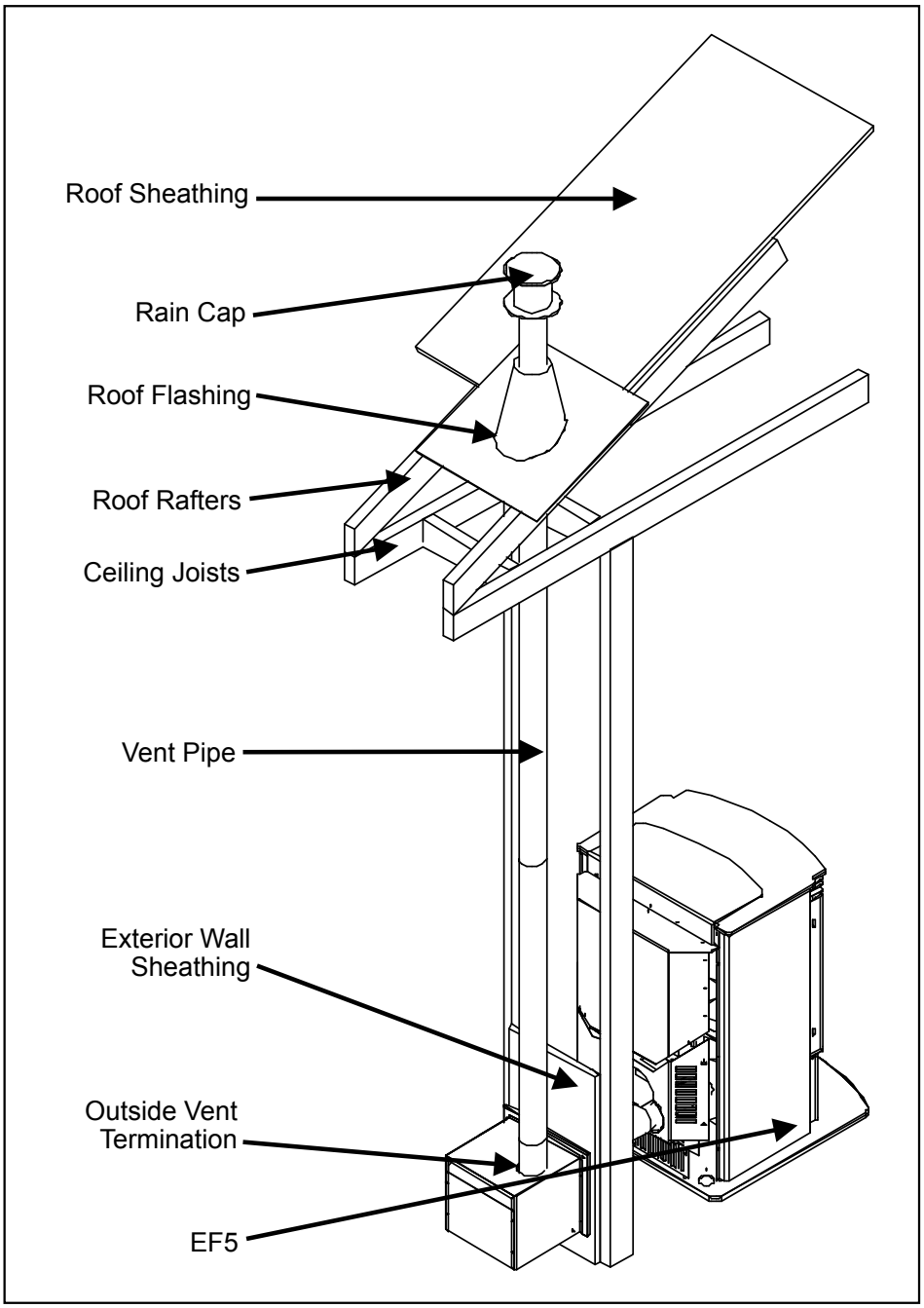

Figure 25: Through Wall Installation with Exterior Blower Kit; Vertical Termination.

Thermostat Installation:

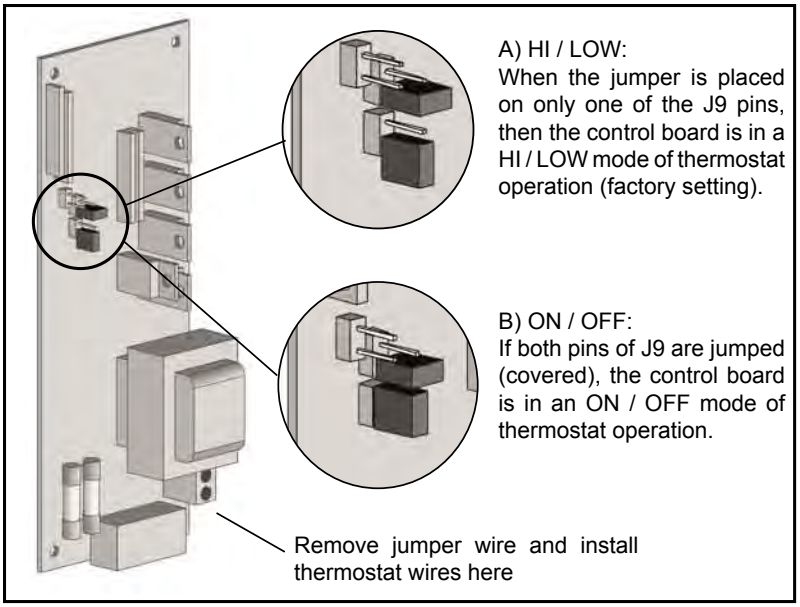

Figure 26: Circuit Board.

This control board can be placed into two different modes: When the jumper J9 is not jumped then the control board is in a HI / LOW mode operation. If the control board is placed with J9 jumped then the control board is in a ON / OFF mode of operation. In the ON /OFF thermostat mode, the unit will shut OFF when the thermostat is not calling for heat. When the thermostat calls for heat, the unit will go through an ignition sequence once again and relight.

1. Install the wall thermostat in a location that is not to close too the unit but will effectively heat the desired area.
2. Install a 12 or 24 Volt Thermostat using an 18 x 2 gauge wire from the unit to the thermostat.

If the unit has been placed in the HI / LOW mode, the unit will be taken to a low or idle setting when the thermostat is not calling for heat. When the thermostat calls for heat, the unit will go to the setting that is displayed on the control board Heat Indicator. If the heating load is not great enough when the stove is on low, the high limit switch will turn the stove off and the switch will have to be manually reset. To reset the high limit switch, remove the right cabinet side. The switch is found behind the control panel. Avoid setting off the high limit switch.

Optional Slider/Damper Installation:

NOTE: NOT FOR USE IN GERMANY

If you wish to adjust the slider damper externally (NOT REQUIRED), please follow the instructions below.

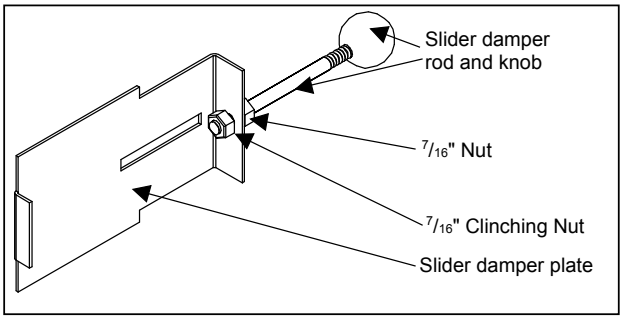

Figure 27: Slider/Damper Assembly.

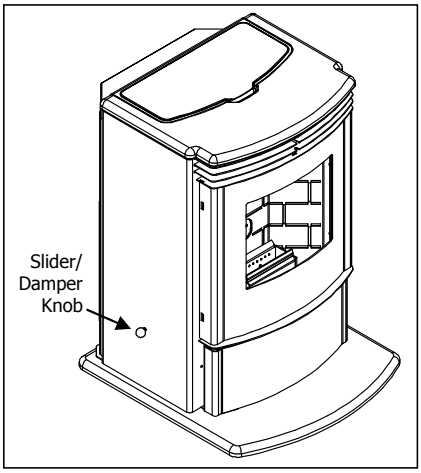

Figure 28: Slider/Damper Knob.

1. To install the OPTIONAL slider damper rod, remove the left cabinet side and locate the slider damper plate. Install the 7/16" inch nut onto the slider damper rod, thread all the way to the end of the threads on rod.
2. Slide rod through the hole in the slider damper plate and install the 7/16" clinching nut onto the rod and tighten completely onto the slider damper plate.
3. Re-install the cabinet side. Install the black knob on the end of the rod. Check slider damper for smooth operation.

Slider/Damper Set-Up:

This is used to regulate the airflow through the pellet stove. The slider Damper has been factory set for German test pellet fuel.

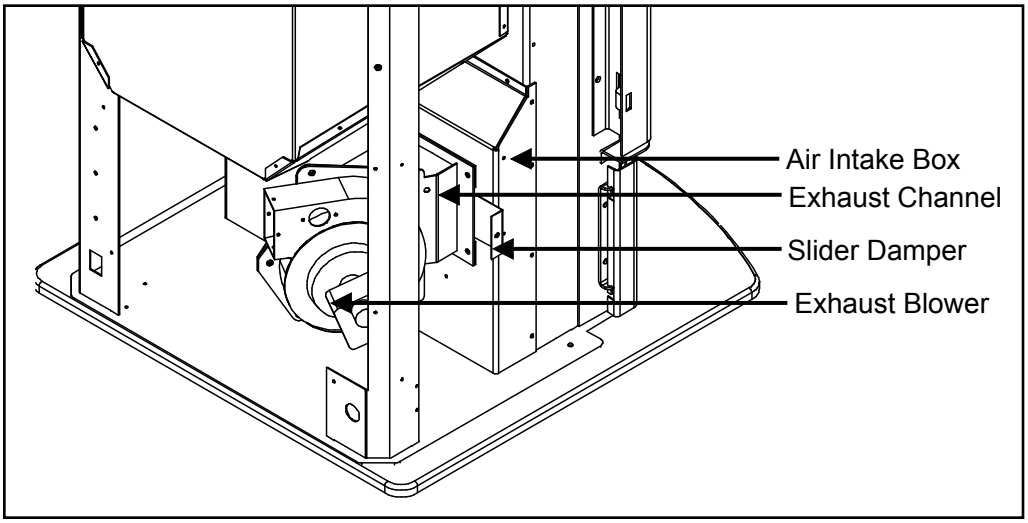

The slider damper is located behind the left side panel. To open the left side panel, undo the one screw located in the upper front corner of the cabinet side between the louvers. Also loosen three screws down the back of the side panel.

Figure 29: Slider/Damper Plate in Unit.

The combustion exhaust blower is a variable speed blower controlled by the heat output button. This blower will decrease the vacuum pressure inside the stove and as the heat output button is turned down. The vacuum pressure inside the firebox will increase as the combustion exhaust blower increases in speed (higher heat output setting).

If the fire should happen to go out and the heat output indicator has been set on the lowest setting, the Slider Damper should be pushed in slightly, decreasing the air in the firebox.

If, after long periods of burning, the fire builds up and overflows the burn pot or there is a build up of clinkers, this would be a sign that the pellet quality is poor, this requires more primary air, the slider damper must be pulled out to compensate. Pulling the slider damper out gives the fire more air.

The easiest way to make sure that an efficient flame is achieved is to understand the characteristics of the fire.

- A tall, lazy flame with dark orange tips requires more air – Open slider (pull out) slightly.
- A short, brisk flame, like a blowtorch, has too much air – Close slider (push in) slightly.
- If the flame is in the middle of these two characteristics with a bright yellow/orange, active flame with no black tips then the air is set for proper operation.

SPECIAL NOTES:

Pellet quality is a major factor in how the Pellet stove will operate. If the pellets have a high moisture content or ash content the fire will be less efficient and has a higher possibility of the fire building up and creating clinkers (hard ash build-up).

Taking a reading of vacuum pressure inside the firebox with a magnehelic gauge can be used to set the slider for best combustion. **The best settings are a reading of approximately 0.10 inches of water column on the high fire setting. Some fuels may require higher or lower settings.** The reading can be taken from the ⅛" (3 mm) hole located on the front of the unit below the door and behind the magnetic ash lip.

Troubleshooting

DO NOT:

- Service the stove with wet hands. The stove is an electrical appliance, which may pose a shock hazard if handled improperly. Only qualified technicians should deal with possible internal electrical failures.
- Do not remove from the firebox any screws without penetrating oil lubrication.

WHAT TO DO IF:

1. The stove will not start.
2. The stove will not operate when hot.
3. The exhaust blower will not function normally.
4. Light # 2 on Heat output bar flashing.
5. Auger light flashes but auger motor does not turn at all
6. The 200 °F (93 °C) high limit temperature sensor has tripped.
7. The convection blower will not function normally.
8. Igniter- the pellets will not light.
9. Control settings (Heat Level) has no effect on the fire.
10. The stove keeps going out.

***NOTE: All troubleshooting procedures should be carried out by qualified technicians or installers.**

1. The stove will not start.

✓Make sure the stove is plugged in and the wall outlet is supplying power..

✓If the Control Board has been placed in the ON /OFF thermostat mode, then turn the thermostat up to call for heat.

✓Check the Heat Level Indicator. - If the # 2 light is flashing (see the # 2 light is flashing)

✓Check the fuses on the circuit board (see "Troubleshooting - Fuses").

✓If the unit still does not start, contact your local service dealer for service.

2. The stove will not operate when hot.

✓Check the Heat Level Indicator if a fire is not detected, or if the fire has gone out **the #3 light will flash** because the Exhaust Temperature Sensor's contacts have opened.

✓Check the hopper for fuel.

✓Incorrect air damper setting. - Excessive air may consume the fire too quickly before the next drop of fuel, leaving completely unburned fuel in the burn pot liner. - Insufficient air will cause build up, further restricting the air flow through the Burn Pot Liner. This in turn will cause the fuel to burn cold and very slowly. Fuel may build up and smother the fire. In this case clean the burn pot. **(NOTE: unit may require a change to the vent system or installation of fresh air to correct Air to Fuel ratio problems).**

✓Combustion Blower failure. - The Combustion Blower is not turning fast enough to generate the proper vacuum in the fire box. Visual Check – is the blower motor turning.

✓Check the Exhaust Blower voltage across the blower wires (>=114 V on #5 setting and >= 82 on #1 setting). – Replace the Circuit Board if the Voltage reading is less than 82 V. with a line voltage >115 V AC.

✓Check Vacuum levels in the exhaust channel by bypassing the Vacuum Switch, then remove the Vacuum hose from Vacuum Switch. Check exhaust vacuum readings by placing the open end of the Vacuum Hose on a Magnahelic Gauge (readings must be above .10" W.C. on low fire).

If the motor fails to reach a 0.10" W.C. readings, then replace the Combustion Blower.

✓Poor Quality Fuel – Insufficient energy in the fuel to produce enough heat to keep the stove burning or operational.

✓Exhaust Temperature Sensor failure. – Bypass sensor located on Exhaust Blower if stove now operates properly, the unit may require cleaning or a new sensor. Contact your local dealer for service.

✓Check the fuses on the circuit board (see "Troubleshooting - Fuses").

3. The exhaust motor will not function normally.

✓Open the left side access panel; check all connections against the wiring diagram.

✓See "2. The stove will not operate when hot." section.

4. Light # 2 on Heat output bar flashing

(The Vacuum Switch contacts have opened for more than 15 sec.)

✓Pinch, break or blockage in Vacuum Hose - Check hose for pinch points or damage, replace or re-route as required. Blow out Vacuum Hose

✓Blocked Hose Barb on Exhaust Channel - Use a paper clip to clean out Hose Barb or remove the Vacuum Hose from the Vacuum Switch and blow into the hose to remove blockage.

✓Blocked exhaust / venting system - Have stove and venting cleaned and inspected.

✓Severe negative pressure in area where unit is installed - Check the operation by opening a window, does this solve the problem? If it does, install fresh air intake to unit or room. Venting system may require vertical section to move termination into a low pressure zone.

✓Vacuum Switch failure - Bypass the vacuum switch, if this corrects the problem check for above problems before replacing the Vacuum Switch.

✓Damage to gray wires between Circuit Board and Vacuum Switch - Inspect wires and connectors

✓Combustion Blower failure - The Combustion Blower is not turning fast enough to generate the proper vacuum in the Exhaust Channel. Visual Check; is the blower motor turning? Check the Exhaust Blower voltage across the blower wires (>=114 V on #5 setting and >= 82 V on #1 setting). – Replace the Circuit Board if the Voltage reading is less than 82 V. with a line voltage >114 V AC.

✓Check Vacuum levels in the exhaust channel by bypassing the vacuum switch, then remove the Vacuum hose from Vacuum Switch. Check exhaust vacuum readings by placing the open end of the Vacuum Hose on a Magnahelic Gauge. (readings must be above .10" W.C. on low fire).

If the motor fails to reach a 0.10" W.C. readings, then replace the Combustion Blower

To reset Circuit Board after a trouble code - push the ON/OFF button

5. Auger light flashes but auger motor does not turn at all.

✓If the Auger gear box does not turn but the motor's armature does try to spin then the auger is jammed. – Try to break apart jam by poking at the jam through the drop tube. If this fails then empty the hopper and remove the Auger Cover **Remember to re-seal the cover after installation**

✓Check the fuses on the circuit board (see "Troubleshooting - Fuses").

6. The 200 °F (93 °C) high limit temperature sensor has tripped.

✓Reset sensor and determine cause – was it Convection Blower failure or 160 °F (71 °C) Temperature Sensor failure? Bypass the 160 °F (71 °C) sensor, does the Convection blower come on high if not replace the blower? If yes, replace sensor (located on the left side of the firewall).

✓Check the fuses on the circuit board (see "Troubleshooting - Fuses").

7. The convection blower will not function normally.

✓Clean all grill openings at the back and below unit .

✓Press the fan button; does the fan come on? Press again to verify that the blower turns on; if, not contact your local dealer for service.

8. Ignitor- the pellets will not light.

✓Everything else in the stove operates but the ignitor will not light the pellets.

✓Make sure the burn pot liner is up tight and square to the ignitor tube by pushing the burn pot back against the ignitor tube.

✓Check to see if the exhaust blower is operating. If not, contact your local dealer for service.

✓Check the fuses on the circuit board (see "Troubleshooting - Fuses").

NOTE: The ignitor should be bright orange in color. If not replace the ignitor.

9. Control settings (Heat Level) has no effect on the fire.

✓NOTE: If the system light is flashing the Control Board has complete control of the unit. When the units system light becomes solid then control of the unit is given back to the operator.

✓If there is no control of the Heat Level button make sure the thermostat is calling for heat.

✓Call your local dealer for service.

10. The stove keeps going out.

If the stove goes out and leaves fresh unburned pellets or cigarette-like ashes in the burn pot liner, the fire is going out before the stove shuts off.

✓Check to see that the Slider / Damper is in the correct position.

✓Turn the Heat Level up slightly (poor quality pellets will require slightly higher settings).

✓Set the auger trim till the #1 and #5 lights are illuminated.

If the stove goes out and there are partially burned pellets left in the burn pot liner, the stove has shut down due to a lack of air, exhaust temperature, or power failure.

✓Adjust the Slider / Damper.

✓Check to see if the stove needs a more complete cleaning.

✓Turn the Heat Level up slightly (poor quality pellets will require slightly higher settings).

✓Did the power go out?

✓Contact your local Dealer for service.

Fuses:

F1 is the fuse to the inside of the circuit board controls. If F1 has blown there may have been an input power overload or a short in the convection fan.

F2 fuse closest fuse to the outside edge of the circuit board controls. If fuse F2 has blown then there was a electrical overload problem with one of the following parts: ignitor, auger motor, high limit switch, or exhaust blower.

Wiring Diagram

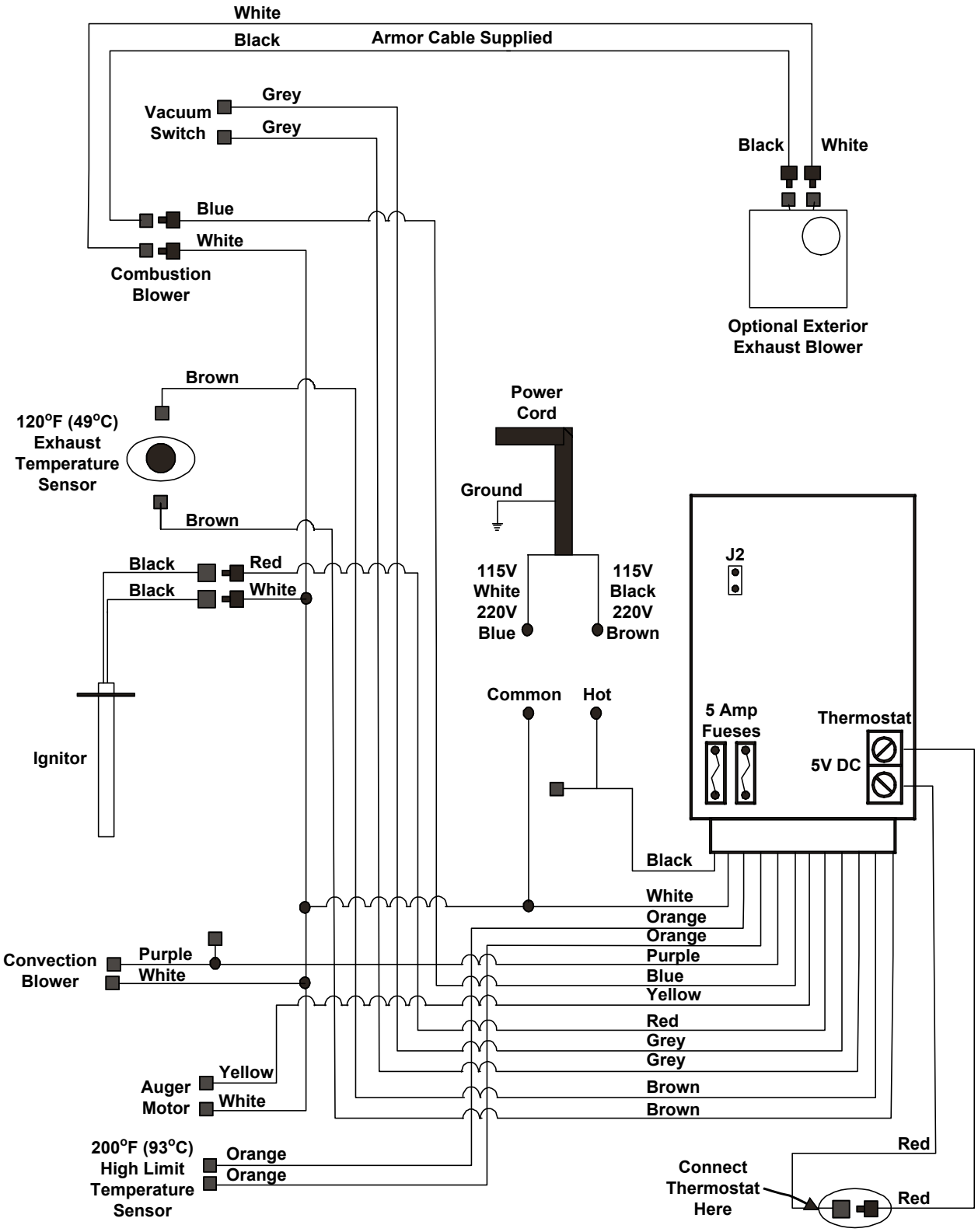

Parts List

Reference Number	Description	Part Number
1	120°F (49°C) Ceramic Fan Temperature Sensor	EC-001
	Fan Controller Knob	EC-040
	Domestic Power Cord - 115V	EC-042
2	Auger Motor - 115V	EF-001
3	High Limit Temp Sensor 200°F (93°C) Manual Reset	EF-016
4	Vacuum Switc - 115V	EF-017
	Silicone Hose	EF-018
	Aluminum Hose Barb	EF-019
	Fan Controller with Knob - 115V	EF-045
	Shoulder Bolt, Hardened Bush & Nut (Set of 2)	EF-124
5	Ash Pan Latch	EF-178
	Pedestal & Ash Pan Gasket - 10’ (305 cm)	EF-208
	Both Side Panels With Hopper Lid - Stainless Steel	EF5-101
6	Hearth Pad	EF5-103
7	Firebox Panel Set With Insulation	EF5-124
7	Firebox Panel Center	EF5-125
7	Firebox Panel Left	EF5-126
7	Firebox Panel Right	EF5-127
8	Burn Pot	EF5-128
9	Ash Pan	EF5-129
10	Ash Pan Cover	EF5-131
11	Ash Shelf - Nickel	EF5-132
12	Glass Retainer Set	EF5-133
13	Door Handle	EF5-134
14	Door Hinge Bracket	EF5-135
15	Door Only - Painted	EF5-136
16	Slider Damper Plate	EF5-137
17	Heat Exchange Rod	EF5-138
18	Back Grill	EF5-139
19	Hopper Lid - Painted	EF5-140
19	Hopper Lid - Stainless Steel	EF5-141
20	Hopper Lid Hinge	EF5-142
21	External Exhaust Back	EF5-143
	External Exhaust Box	EF5-144
22	External Exhaust Bottom	EF5-145
23	45° Exhaust Adaptor	EF5-146
24	Exhaust Starter Tube 3” x 2½” Long	EF5-147
25	Door Assembly Complete	20-014

Parts List

Reference Number	Description	Part Number
26	Levelling Legs (Set of 4)	20-018
	Hardened Bushing	20-020
	Wire Harness	20-021
27	Glass With Gasket (356 mm x356 mm)	20-023
	Thermostat Interface	20-026
28	Cabinet Side Left - Stainless Steel	20-029
28	Cabinet Side Left - Painted	20-031
29	Cabinet Side Right - Stainless Steel	20-030
29	Cabinet Side Right - Painted	20-032
	Cast Top	20-038
30	Control Panel Door	20-040
30	Control Panel Door - Stainless Steel	50-684
31	Brick Liner	20-045
32	Stainless Steel Burn Pot Liner	20-054
33	External Exhaust Kit (3” pipe)	20-070
	Nickel Upgrade Kit	20-073
	Door Gasket (7ft)	50-088
	60° Exterior Exhaust Adaptor	50-096
34	Top Louver Set - Nickel	50-097
	Ash Shelf Louver	50-162
35	Circuit Board - 115V	50-178
35	Circuit Board 5 Amp Fuse - 115V (Pair)	50-833
36	Circuit Board Decal	50-179
	Slider Damper Rod & Knob	50-293
	Top Glass Retainer	50-294
	Control Panel Touch Latch	50-323
36	Circuit Board Control Panel	50-330
	Circuit Board Stand Offs	50-331
	Circuit Board Wire Harness	50-332
	Hopper Guard	50-333
37	Convection Blower - 115V (No Mount)	50-512
38	Convection Blower Mount & Hardware	50-585
39	400 Watt Ignitor - 115V	50-619
	Auger Mounting Hardware	50-689
	Auger Plate with Bushing	50-899
40	Exhaust Blower Assembly - 115V	50-901
	Auger Motor Mount	50-910
	Domestic Owners Manual	50-1021
41	Auger with paddles	50-1085

Parts Diagram - Components

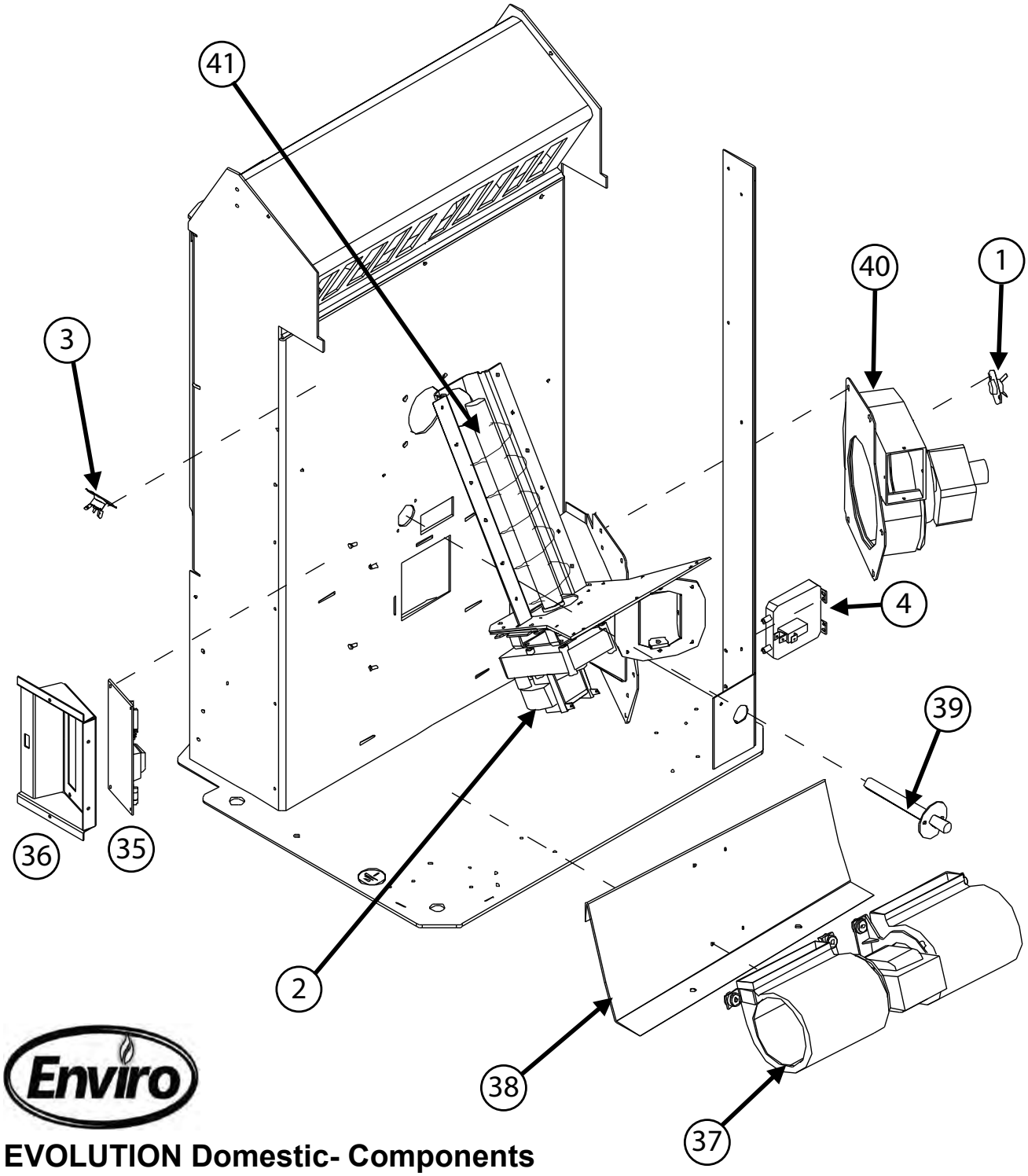

EVOLUTION Domestic- Components

September 2004

Parts Diagram - Steel

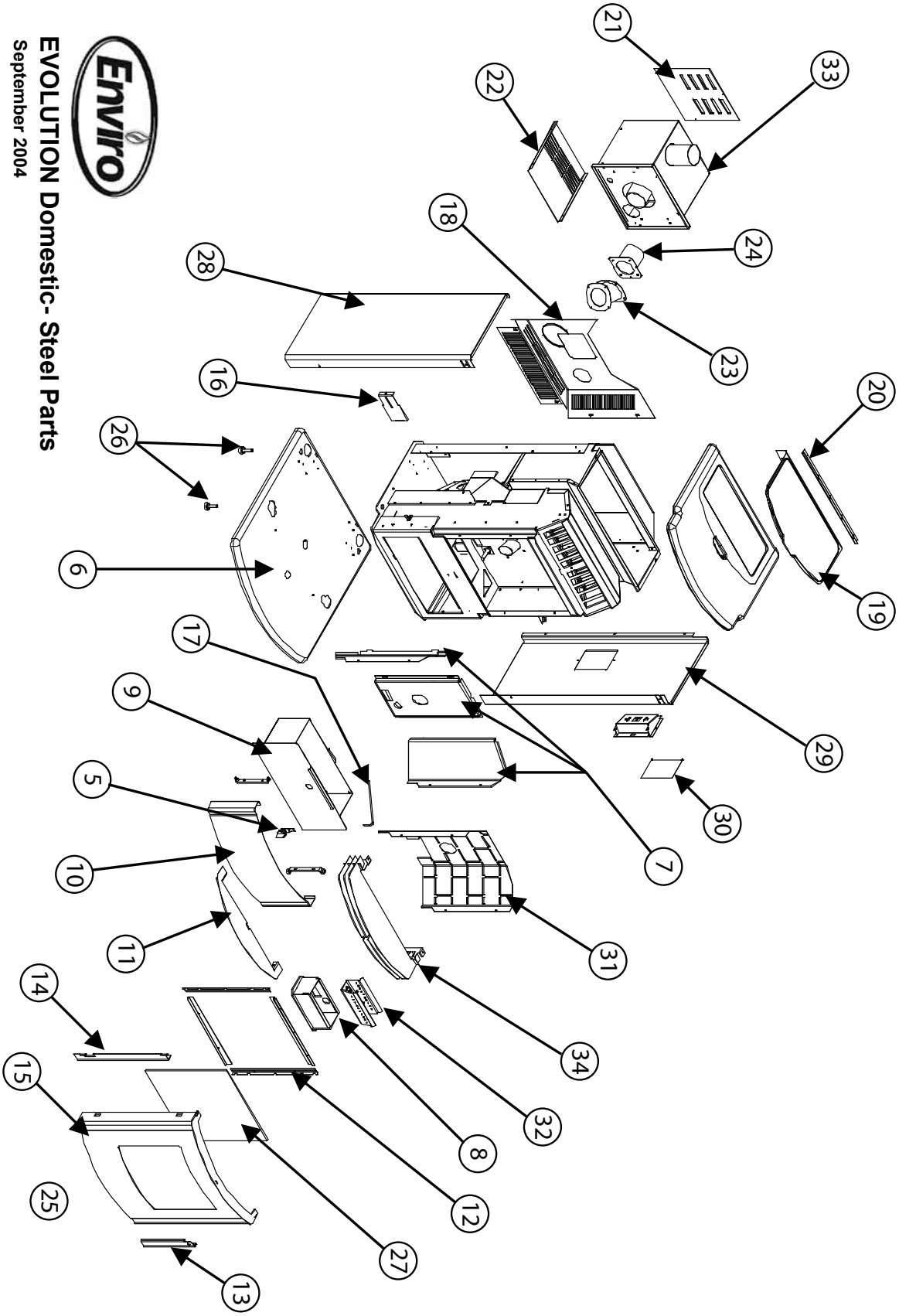

Warranty

Sherwood Industries Ltd. gives a five year limited warranty on all steel manufactured parts. A one-year warranty is provided on all electrical components. The above limited warranties are extended only to the original purchaser.

There is no warranty on the following parts:

- Fiberglass rope baskets
- refractory material
- burn pot liner
- paint
- enamel finish or gold plating where it applies
- vacuum hose.

****NOTE:** The paint on the brick firebox lining may peel. This is due to the extreme conditions applied to the paint and is in no way covered under warranty.

WHEN FILING A WARRANTY CLAIM PLEASE COMPLETE THE FOLLOWING INFORMATION ON AN OFFICIAL WARRANTY CLAIM FORM:

TO THE DEALER:

- Name, Address and Telephone Number of purchaser and date of purchase.
- Date of Installation. Name of the installer and dealer. Serial Number of the appliance. Nature of the complaint, defects or malfunction, description and part # of any parts replaced.

TO THE DISTRIBUTOR:

- Sign and verify that work and information are correct.

ENSURE THAT YOU SPECIFY THE NATURE OF THE COMPLAINT, DEFECT, PERIODICAL MALFUNCTION, ETC.

The limited warranty covers defects in materials and workmanship as long as the products has been installed according to the manual's instruction. If the product is damaged or broken as a result of mishandling or misuse, the warranty does not apply. Removal and re-installation costs are not covered under this warranty.

It is the manufacturer's option whether to repair or replace the appliance. The shipping cost to and from the factory is paid by the consumer. All warranties by the manufacturer are set forth herein and no claim shall be made against the manufacturer on any oral warranty or representation.

Sherwood Industries Ltd. assumes no responsibility for damage caused by household power fluctuations or power surges.

Under Warranty

For the do-it-yourself Individual

The consumer should be aware that the pellet appliance needs setting using tools that he/she might not have. Consult an ENVIRO dealer. It is recommended than only an authorized ENVIRO dealer installs an ENVIRO unit. There will be no warranty coverage on parts destroyed or burnt out as a result of a consumer installation error or defect.

Sherwood Industries Ltd. reserves the right to make changes without any notice.

Installation Data Sheet

The following information must be recorded by the installer for warranty purposes and future reference.

NAME OF OWNER:

_____

ADDRESS:

_____

_____

_____

PHONE:_____

NAME OF DEALER:

_____

ADDRESS:

_____

_____

_____

PHONE:_____

MODEL:_____

SERIAL NUMBER:_____

DATE OF PURCHASE: _____ (dd/mm/yyyy)

DATE OF INSTALLATION:_____(dd/mm/yyyy)

MAGNEHELIC AT INSTALL:_____

INSTALLER'S SIGNATURE:

_____

NAME OF INSTALLER:

_____

ADDRESS:

_____

_____

_____

PHONE:_____

MANUFACTURED BY:
SHERWOOD INDUSTRIES LTD.
6782 OLDFIELD RD. SAANICHTON, BC, CANADA V8M 2A3
www.envirofire.biz
September 10, 2004
C-10608