SHERWOOD INDUSTRIES IS AN ENVIRONMENTALLY RESPONSIBLE COMPANY. THIS MANUAL IS PRINTED ON RECYCLED PAPER.

PLEASE KEEP THESE INSTRUCTIONS FOR FUTURE REFERENCE

VISTAFLAME HEARTH PRODUCTS

VF36

DIRECT VENT FIREPLACE

BY: SHERWOOD INDUSTRIES LTD

OWNER'S MANUAL

WHAT TO DO IF YOU SMELL GAS

- **Open windows/extinguish any open flame.**
- **Do not try to light any appliance.**
- **Do not touch any electrical switch or use any phone in your building.**
- **Immediately call your gas supplier from a neighbour's phone. Follow the gas supplier's instructions.**
- **If you cannot reach your gas supplier, call the fire department.**



FOR YOUR SAFETY

Do not store or use gasoline or other flammable vapours and liquids in the vicinity of this or any other appliance.

WARNING

If the information in this manual is not followed exactly, a fire or explosion may result causing property damage, personal injury or loss of life. Installation and service must be performed by a qualified installer, service agency or the gas supplier.

This appliance may be installed in an after-market permanently located, manufactured (mobile) home, where not prohibited by local codes.

This appliance is only for use with the type of gas indicated on the rating plate. This appliance is not convertible for use with other gases, unless a certified kit is used.

INTERTEK C Warnock Hersey US

Massachusetts installations (Warning): This product must be installed by a licensed plumber or gas fitter when installed within the Commonwealth of Massachusetts. Other Massachusetts code requirements: Flexible connector must not be longer than 36in, shut-off valve must be a "T" handle gas cock; only direct vent sealed combustion products are approved for bedrooms/bathrooms; fireplace dampers must be removed or welded in the open position prior to the installation of a fireplace insert or gas log.

Safety Precautions

FOR SAFE INSTALLATION AND OPERATION OF YOUR "VISTA FLAME" HEATER, PLEASE CAREFULLY READ THE FOLLOWING INFORMATION:

- All Vista Flame gas-fired appliances must be installed in accordance with their instructions. Carefully read all the instructions in this manual first. Consult the building authority having jurisdiction to determine the need for a permit prior to commencing the installation.
- **NOTE:** Failure to follow these instructions could cause a malfunction of the fireplace, which could result in death, serious bodily injury, and/or property damage.
- Failure to follow these instructions may also void your fire insurance and/or warranty.

GENERAL

- Installation and repair should be done by a qualified service person. The appliance should be inspected before the first use and, at least, annually by a qualified service person. More frequent cleaning may be required due to excessive lint from carpeting, bedding material, etc. It is imperative the control compartments, burners and circulating air passageways of the appliance be kept clean.
- Due to high temperatures, the appliance should be located out of high traffic areas and away from furniture and draperies.

Children and adults should be alerted to the hazards of high surface temperatures and should stay away to avoid burn or clothing ignition.

- Young children should be carefully supervised when in the same room as the appliance.
- Clothing or other flammable materials should not be placed on or near the appliance.

FOR YOUR SAFETY

- Installation and service must be performed by a qualified installer, service agency or gas supplier.
- This installation must conform to local codes or, in the absence of local codes, to the current CAN/CGA-B149 installation code (Canada) or National Fuel Gas Code ANSI Z223.1.2 (USA)
- To prevent injury, do not allow anyone who is unfamiliar with the stove to operate it.

- **To prevent injury, if the pilot or pilot and burners have gone out on their own, open the glass door and wait 5 minutes to air out before attempting to re-light the stove.**

- Always keep the area around these appliances clear of combustible material, gasoline and other flammable liquids and vapours.
- These appliances should not be used as a drying rack for clothing or for hanging Christmas stockings/ decorations.
- Due to the paint curing on the stove, a faint odor and slight smoking will likely be noticed when the stove is first used. Open a window until the smoking stops.

Always connect this gas stove to a vent system and vent to the outside of the building envelope. Never vent to another room or inside the building. Make sure the specified vent pipe is used, properly sized and of adequate height to provide sufficient draft. Inspect the venting system annually for blockage and signs of deterioration.

WARNING: Failure to position the parts in accordance with the diagrams in this booklet, or failure to use only parts specifically approved with this appliance, may result in property damage or personal injury.

WARNING: Do not operate with the glass front removed, cracked or broken. Replacement of the glass should be done by a licensed or qualified service person.

- Never use solid fuels such as wood, paper, cardboard, coal, or any flammable liquids, etc., in this appliance.
- Do not use this heater if any part has been under water. Immediately call a qualified service technician to inspect the heater and to replace any part of the control or gas control systems that have been under water.
- Do not abuse the glass by striking it or slamming the door shut.

Table of Contents

Safety Precautions....2
Table of Contents....3
Codes And Approvals....4
Specifications....5
    Dimensions....5
    Rating Label Location....5
Operating Instructions....6
    Pilot Lighting Instructions....6
    Pilot Light....7
    Air Shutter....7
    Burner Lighting....8
    Remote controls....8
    Blower speed (Optional)....8
Maintenance And Service....9
    Routine Maintenance....9
    Cleaning The Glass....9
    Cleaning The Firebox....9
    Replacing the Glass....9
    Cleaning Decorative Surfaces....10
    Glass Door Removal....10
    Fuel Conversion....11
Initial Installation....12
    Introduction....12
    Placement and Framing....12
    Framing Mount Brackets....13
    Corner Installation....13
    Raised Fireplaces and Hearths....13
    Mantle Clearances....14
    Vent Termination Restrictions....15
    Vent Parts and Terminal Clearances....16
    Venting....16
    Vent Configurations and Restrictor Settings....18
    Horizontal Termination....19
    Vertical Termination....20
    Installation Of Electrical Wiring For The Optional Fan Kit....23
    Electrical System For Thermostat....23
    Gas Line Connection and Testing....24
Secondary Installation....25
    Log Set and Ember Installation....25
    Optional Ceramic Brick Panel Installation....28
    Optional Fan Kit Installation....29
Trouble Shooting....31
Parts List....32
Parts Diagram....33
Warranty....34
Installation Data Sheet....35

Codes And Approvals

DIRECT VENT ONLY: This type is identified by the prefix DV. This appliance draws all of its air for combustion from outside the dwelling, through a specially designed vent pipe system.

This appliance has been tested and approved for installations from 0 feet to 4500 feet (1372 m) above sea level.

In the USA: The appliance may be installed at higher altitudes. Please refer to your American Gas Association guidelines which state: the sea level rated input of Gas Designed Appliances installed at elevations above 2000 (610 m) feet is to be reduced 4% for each 1000 feet (305 m) above sea level. Refer also to local authorities or codes which have jurisdiction in your area regarding the de-rate guidelines.

In Canada: When the appliance is installed at elevations above 4500 feet (1372 m), the certified high altitude rating shall be reduced at the rate of 4% for each additional 1000 feet (305 m).

- This appliance has been tested by INTERTEK (**Warnock Hersey**) and found to comply with the established VENTED GAS FIREPLACE HEATER standards in CANADA and the USA as follows:

VENTED GAS FIREPLACE HEATER (VF36; NG/LPG)

TESTED TO: ANSI Z21.88a-2003/CSA 2.33a-2003 VENTED GAS FIREPLACE HEATERS

CAN/CGA 2.17-M91 GAS FIRED APPLIANCES FOR HIGH ALTITUDES

CSA P.4.1-02 TESTING METHOD FOR MEASURING ANNUAL FIREPLACE EFFICIENCY

This Vista Flame VF36 Fireplace:

- Has been certified for use with either natural or propane gases. (See rating label.)
- Is not for use with solid fuels.
- Is approved for bedroom or bed sitting room. (**IN CANADA**: must be installed with a listed wall thermostat. **IN USA**: see current ANSI Z223.1 for installation instructions.)
- Must be installed in accordance with local codes. If none exist, use current installation code CAN/CGA B149 in Canada or ANSI Z223.1/NFPA 54 in the USA.
- Must be properly connected to an approved venting system and not connected to a chimney flue serving a separate solid-fuel burning appliance.
- Can be used with an optional fan kit (part number 50-925); if so, an electrical receptacle box and 14/3 wire power cable must be wired to the appliance upon installation.

IMPORTANT NOTICE (Regarding first fire up): When the unit is turned on for the first time, it should be turned onto high without the fan on for the first 4 hours. This will cure the paint, logs, gasket material and other products used in the manufacturing process. It is advisable to open a window or door, as the unit will start to smoke and can irritate some people. After the unit has gone through the first burn, turn the unit off including the pilot, let the unit get cold then remove the glass door and clean it with a good gas fireplace glass cleaner, available at your local Vista Flame dealer.

NATIONAL FIREPLACE INSTITUTE®

NFI

CERTIFIED

www.nficertified.org

We recommend that our gas hearth products be installed and serviced by professionals who are certified in the U.S. by the National Fireplace Institute® (NFI) as NFI Gas Specialists.

Specifications

INSTALLATION OPTIONS:

- Parallel to a wall or placed in a corner
- Vertical or horizontal venting
- With a floor hearth or raised up the wall

WARNING:

Operation of this heater when not connected to a properly installed and maintained venting system can result in carbon monoxide (CO) poisoning and possible death.

Dimensions:

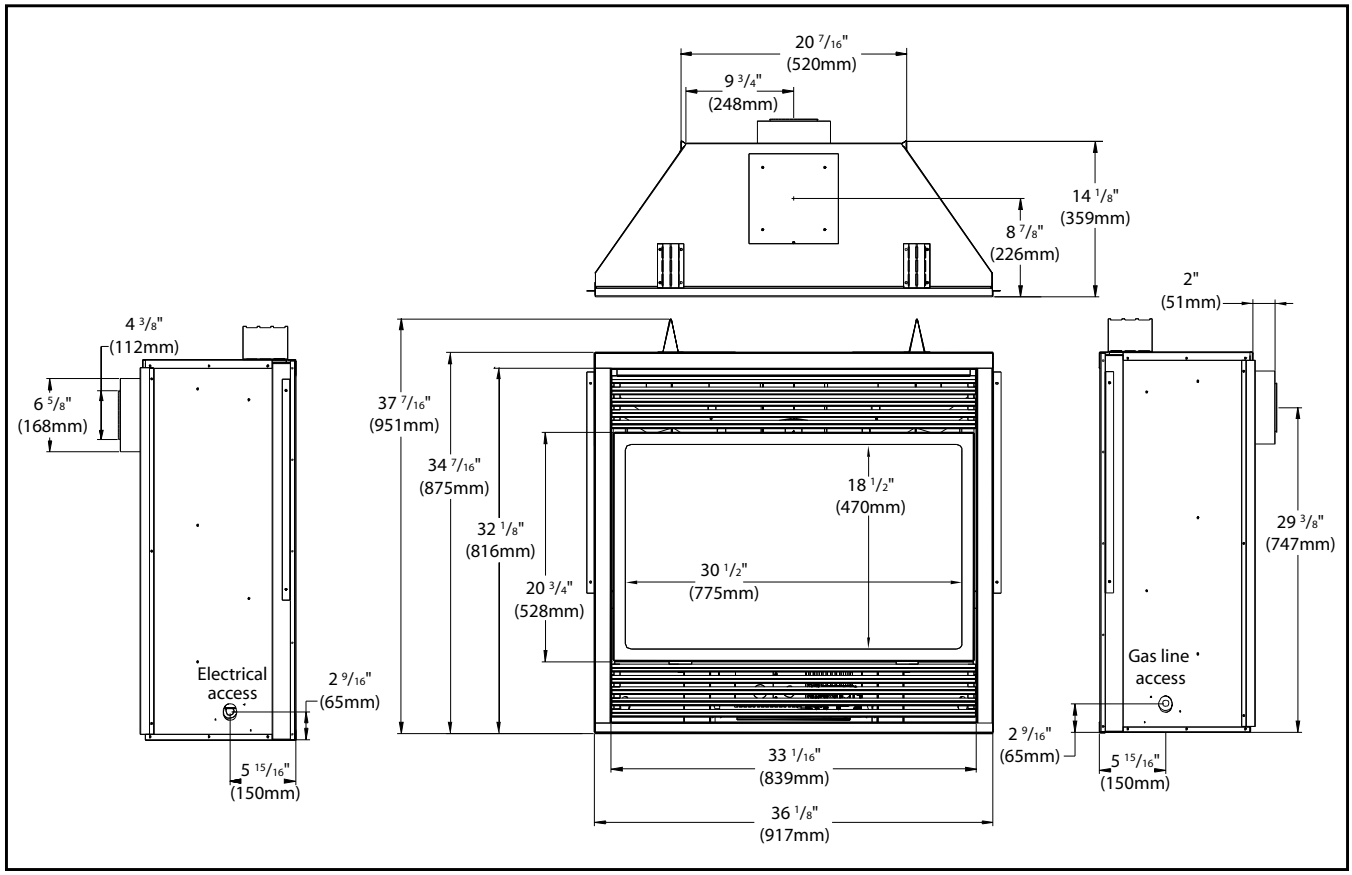

Figure 1. Dimensions of the Firebox.

Rating Label Location:

The rating label is located under the control panel and is attached to a rectangular metal sheet that is chained to the fireplace.

Operating Instructions

For Your Safety, Read Safety Precautions And Lighting Instructions Before Operating

WARNING: IF YOU DO NOT FOLLOW THESE INSTRUCTIONS EXACTLY A FIRE OR EXPLOSION MAY RESULT, CAUSING PROPERTY DAMAGE, PERSONAL INJURY OF LOSS OF LIFE.

Pilot Lighting Instructions:

CAUTION: Hot while operating. Do not touch. Severe burns may result. Keep children, clothing, furniture, gasoline or other flammable vapors away.

CAUTION: Do not operate this fireplace with the glass removed, cracked or broken. Replacement of the panel(s) should be done by a licensed or qualified person! This appliance needs fresh air for safe operation and must be installed with provisions for combustion and ventilation air. See installation and operating instructions manual. Keep burner and control compartment clean.

WARNING: Improper installation, adjustment, alteration, service or maintenance can cause injury or property damage, or loss of life. Refer to owner's information manual provided with this appliance. For assistance or additional information consult a qualified installer, service agency or the gas supplier.

Keep burner and control compartment clean. See installation and operating instructions accompanying appliance.

FOR YOUR SAFETY READ BEFORE

WARNING: IF YOU DO NOT FOLLOW THESE INSTRUCTIONS EXACTLY, A FIRE OR EXPLOSION MAY RESULT CAUSING PROPERTY DAMAGE, PERSONAL INJURY OR LOSS OF LIFE.

A) This appliance is equipped with a pilot, which must be lit by hand by following these instructions exactly.

B) BEFORE LIGHTING smell all around the appliance area for gas and next to the floor because some gas is heavier than air and will settle on the floor.

WHAT TO DO IF YOU SMELL GAS:
Do not try to light any appliance. Do not touch any electrical switch: do not use any phone in your building. Immediately call your gas supplier from a neighbors' phone. Follow the gas suppliers instructions. If you cannot reach your gas supplier, call the fire department.

C) Use only your hand to push in or turn the gas control knob; NEVER use tools. If the knob will not push in or turn by hand, do not try to repair it. Call a qualified service technician. Force or attempted repair may result in a fire or explosion.

D) Do not use this appliance if any part has been under water. Immediately call a qualified service technician to inspect the appliance and to replace any part of the control system and any gas control which has been under water.

LIGHTING INSTRUCTIONS

1. STOP! Read the safety information above on this label.
2. Turn off all electrical power to this appliance.
3. Turn the gas control knob clockwise ↷ to the off position.
4. Open door. Wait five (5) minutes to clear out any gas. Close door. If you smell gas STOP! Follow "B" in the above safety information. If you do not smell gas go to the next step.
5. Find pilot-located to the right behind the side log. Turn the gas control knob counter-clockwise ↶ to "PILOT". Push the gas control in fully and hold. Keep knob depressed for about 30 seconds after pilot is lit. Release knob. If pilot goes out, repeat steps 4 through 5.

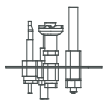

WARNING: this gas valve has a lockout device, which will not allow the pilot burner to be relit until the thermocouple has cooled. If the knob does not pop up when released, stop and immediately call your service technician or gas supplier.

If the pilot does not stay lit after several tries, turn the gas control knob to "OFF" and call your service technician or gas supplier.

6. Turn the gas control knob counter clockwise ↶ to the "ON" position. Flip the burner switch to "ON" THEN TURN THE "HI/LOW" knob to the desired setting.
7. Turn on the electrical power to the unit.



TO TURN OFF GAS TO APPLIANCE

1. Flip burner switch to "OFF"
2. Turn the gas control knob clockwise ↷ to the "OFF" position
3. Turn off all electrical power to the appliance if service is to be performed.

C-10078

Figure 2. Lighting Instruction Label

Operating Instructions

Pilot Light:

1. Turn off the gas to the fireplace. **If not recently done, remove the glass and let the unit air out for at least five (5) minutes to clear out any gas.** Turn on gas to the heater. Leak test all joints with soapy water. **NEVER USE OPEN FLAME FOR LEAK TESTING.**

2. Start the pilot by pressing the gas control knob and turning it to PILOT. While holding the gas control knob in, press the piezo ignitor several times until the pilot light starts. Hold the gas control knob in for 30 seconds. Check that the pilot has fully engulfed the thermocouple assembly (see Figure 3).

3. Start the main burner by turning the gas control knob to ON and then turn the rocker switch to ON. Check that all burner ports have flame.

4. Leak test all gas joints again.

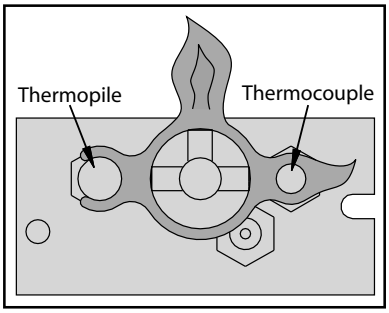

Figure 3. Pilot Flame

Air Shutter:

The air shutter adjustment lever is centered above the controls (see Figure 4).

The air shutter allows the amount of air coming into the fireplace to be adjusted in order to accommodate different climates and venting arrangements. Start the pilot and then the burner. Make sure the pilot flame is burning normally and none of the burner ports are plugged. Let the fireplace burn for roughly fifteen minutes and then examine the flames, compare the flames to Figure 40.

The ideal flame will be blue at the base and light orange above. The flames should be of medium height. If the flames look like this, no venturi adjustment is needed. If the flames are fairly short and mostly blue, the fireplace is getting too much air. Therefore, the air shutter should be closed (push in) slightly until the correct flames are achieved. Flames that are very orange, with tall, dark, stringy tips, are not getting enough air. Open (pull out) the venturi until the flames clean up. If the venturi is opened, or closed all the way, and the correct flames cannot be attained, turn off the gas and contact the dealer.

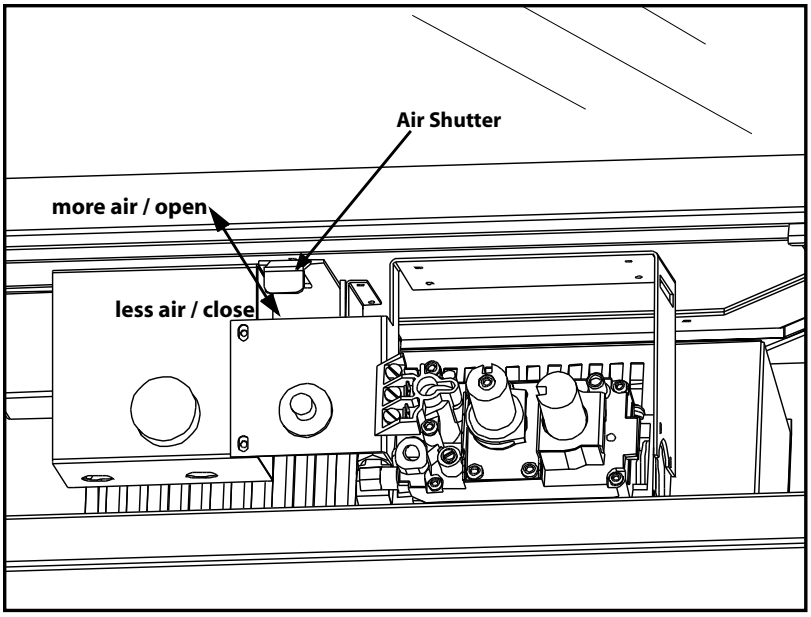

Figure 4. Air shutter adjustment lever.

Warning: Incorrect venturi adjustment may lead to improper combustion, which is a safety hazard. Contact the dealer if there is any concern about the venturi adjustment.

Operating Instructions

For Your Safety, Read Safety Precautions And Lighting Instructions Before Operating

Burner Lighting:

A) Make sure the pilot is lit.
B) Turn gas control knob COUNTER CLOCKWISE to ON.
C) Flip the burner switch to ON.
D) Turn HI/LO knob to the desired flame height.
E) Turn on all electrical power to the unit.

NOTE: Check that all burner holes are lit.

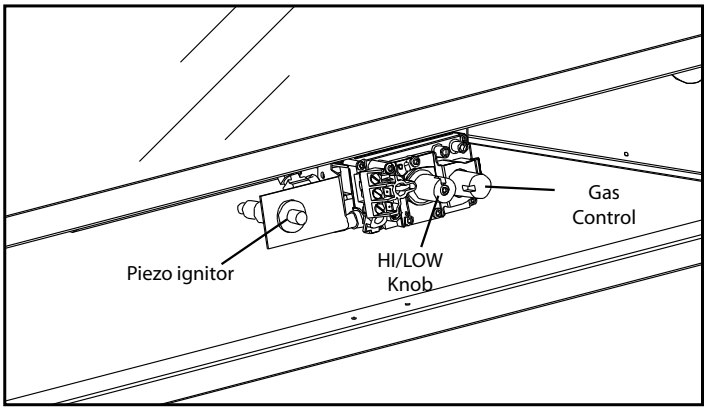

Figure 5. Control Panel

TO TURN GAS FIREPLACE OFF:

Flip switch to OFF to turn off burners only.

If the fireplace is to be turned off for the season, or for servicing, turn the gas shut off valve to OFF. DO NOT FORCE IT. If the unit is going to be serviced, turn off the electrical power to the unit as well.

NOTE: When the unit is turned on for the first time, it should be turned onto high, with the fan OFF, for the first two to four hours. This will cure the paint, logs, gasket material, and other products used in the manufacturing process. It is advised that a door or window be opened as the unit will start to smoke, which can irritate some people. After the unit has gone through the first burn, turn the unit OFF, including the pilot, and let the unit get completely cold. Then remove the glass and clean it with a good gas fireplace glass cleaner, available at your local Vista Flame dealer. See "Maintenance And Service; Glass Door Removal" and "Maintenance And Service; Cleaning The Glass."

Remote controls:

This fireplace can use an optional remote control or an optional cordless wall thermostat. If either of these are to be used to control the fireplace for the majority of the time, leave the ON/OFF switch (on the control panel) in the remote/thermostat position. Consult the instructions included with the remote/wall thermostat for operation guidelines.

Blower speed (Optional):

The blower will come on only when the fireplace is up to temperature (approximately 20 minutes). The speed of the fan can be changed by turning the fan control knob. To turn the blower off, turn the knob COUNTER CLOCKWISE until it "clicks" off (Figure 6).

It is advisable not to operate the blower below 1/3 speed as it puts a strain on the windings of the blower and running the blower at lower speeds could also cause premature fan failure.

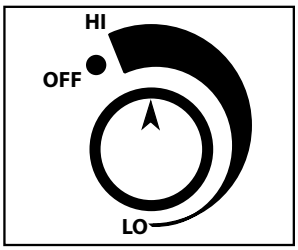

Figure 6. Fan Control

Maintenance And Service

Routine Maintenance:

At least once a year, run through the following procedures to ensure the system is clean and working properly. Check the burner to see if all the ports are clear and clean. Check the pilot to make sure it is not blocked by anything. The pilot flame should be blue with little or no yellow on the tips.

Warning: Clearances must be sufficient to allow access for maintenance and service

Warning: Failure to position the parts in accordance with this manual, or failure to use only parts specifically approved with this appliance may result in property damage or personal injury.

The venting system must be periodically examined; it is recommended the examination is done by a qualified agency.

Cleaning The Glass:

When the fireplace has cooled, remove the face of the fireplace along with the glass. See Maintenance And Service - Glass Door Removal. Check the gasket material on the back of the glass, making sure that it is attached and intact.

During a cold start up, condensation will sometimes form on the glass. This is a normal condition with all fireplaces. However, this condensation can allow dust and lint to cling to the glass surface. Initial paint curing of the appliance can leave a slight film behind the glass, a temporary problem. The glass will need cleaning about two weeks after installation. **Use a mild glass cleaner and a soft cloth**; **abrasive cleaners will damage the glass and plated surfaces.** Depending on the amount of use, the glass should require cleaning no more than two or three times a season. **Do not clean the glass when it is hot.**

Cleaning The Firebox:

Remove the logs carefully, as they are very fragile. Gently remove all the embers and rock wool and place on a paper towel. Vacuum the bottom of the firebox thoroughly. Carefully clean any dust off the logs and remove any lint from the burner and pilot. At this time, inspect the burner pan for cracking or severe warping. If a problem is suspected, contact the dealer. Check the logs for deterioration or large amounts of soot; a small amount on the bottom side of the logs is normal. Replace the logs and embers as in the Log Set and Ember Installation section. If new/more embers and rock wool are required, contact your nearest Vista Flame dealer.

Replacing the Glass:

The glass in the fireplace is a high temperature ceramic. If the glass is damaged in any way, a factory replacement is required (see Parts List - Components). Wear gloves when handling damaged glass door assembly to prevent personal injury. When the glass door assembly is being transported, it must be wrapped in newsprint and tape and/or a strong plastic bag. Do not operate with the glass front removed, cracked or broken. Removal and replacement of the glass from the door **must** be done by a licensed or qualified service person. **The glass must be purchased from an Vista Flame dealer. No substitute materials are allowed.**

Maintenance And Service

Cleaning Decorative Surfaces:

Painted and porcelain faces should be wiped with a damp cloth periodically. If a plated face has been purchased, it should be unpacked/unwrapped carefully to avoid getting anything on the surface of the finish, including cleaners, polish and finger prints. It is important to note that fingerprints and other marks can leave a permanent stain on plated finishes. **To avoid this, give the face a quick wipe with denatured alcohol on a soft cloth BEFORE lighting the fireplace.** Never clean the face when it is hot. Do not use other cleaners as they may leave a residue, which can become permanently etched into the surface.

If your fingers come into contact with the antique copper finish, the oils left as fingerprints on the copper can cause discoloration, which will eventually turn green in that area. You can clean the patina or discolored areas of the antique copper finish with "OO" 3M green sanding pads. These can be purchased from most hardware stores. On the areas with discoloration, use the sanding pads to sand in the same direction as the brushed finish, then blend the finish by feathering in the surrounding area. This refinishing procedure has been approved by the manufacturer and will not harm the finish. Please note: ANTIQUE COPPER IS THE ONLY FINISH THAT CAN BE SANDED, DO NOT SAND PEWTER, GOLD OR NICKEL FINISHES.

Glass Door Removal:

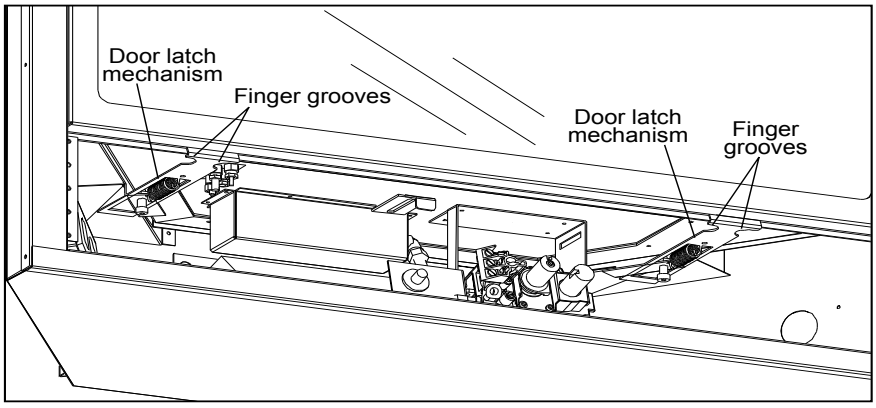

Figure 7. Bottom latches for glass.

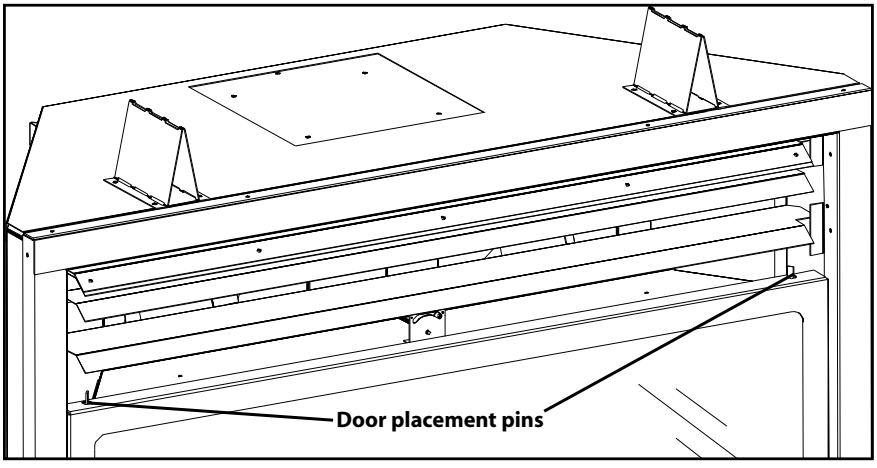

Figure 8. Top pins for glass door.

In order to install the log set, and for regular cleaning, the glass door must be removed. There are two (2) door latch mechanisms under the glass door shown in Figure 7. Each latch has two (2) finger grooves, use these to pull the mechanisms straight out. When the bottom latches are unhooked, lift the door straight up over the placement pins at the top of the door, shown in Figure 8.

To replace the glass door, simply reverse the above procedure.

Warning: Do not touch or attempt to remove the glass if the fireplace is not completely cold.

WARNING: Never operate the fireplace with the glass removed.

Maintenance And Service

TO BE INSTALLED BY A QUALIFIED SERVICE AGENCY ONLY

Fuel Conversion:

Warning: This conversion kit shall be installed by a qualified service agency in accordance with the manufacturer's instructions and all applicable codes and requirements of the authority having jurisdiction. If the information in these instructions is not followed exactly, a fire, explosion or production of carbon monoxide may result causing property damage, personal injury or loss of life. The qualified service agency is responsible for the proper installation of this kit. The installation is not proper or complete until the operation of the converted appliance is checked as specified in the manufacturer's instructions supplied with the kit.

Please read and follow these instructions. Also, please read the instruction guidelines provided by S.I.T. on how to remove and install the HI/LO regulator.



Figure 9. Ignitor assembly beside the burner.

Step 1. Carefully inspect all parts supplied with this conversion kit.

Step 2. Shut the gas supply off at the shut-off valve. (CAUTION: The gas supply shall be shut off prior to disconnecting the electrical power, before proceeding with the conversion.)

Step 3. Remove the glass as shown in the Maintenance and Service.

Step 4. Change the regulator on the front of the gas valve (follow the instructions provided by S.I.T.).

Step 5. To change the pilot, simply pull the pilot hood straight up to access the pilot injector. Using a 5/32 inch Allen key, remove the pilot injector.

Step 6. Install the new pilot injector supplied with this conversion kit. Simply screw the new injector inside the pilot hood and reinstall the hood by placing the hood on the assembly, line up the key way, and snap into place.

Step 7. Remove the main burner orifice with a ½ inch deep socket.

Step 8. Install the new orifice supplied. Be sure to put a bead of pipe-thread sealant or approved Teflon tape on the orifice before installing into the burner assembly.

Step 9. Reinstall the burner tray, log set, embers, and glass. When re-installing the burner, ensure that the burner to pilot hood relationship is as shown on Figure 9.

Step 10. Open the shut-off valve at the gas line to the unit.

Step 11. Use a small brush to apply a warm soapy water solution to all gas connections (use a half dish soap and half warm water). If a gas leak is present, bubbling will occur. Gas leaks can be repaired by using an approved pipe thread sealant or approved Teflon tape. NEVER USE A NAKED FLAME WHEN TESTING FOR LEAKS.

Step 12. Re-light the fireplace to ensure proper operation and proper flame appearance.

Step 13. MAKE SURE that the sticker provided by S.I.T. is installed, to signify that the valve has been converted to a different fuel type. Also, make sure that the rating plate has a conversion label to show this unit has been converted to a different fuel type.

A VISUAL CHECK OF THE REGULATOR KNOB IS NECESSARY TO DETERMINE WHETHER OR NOT THE REGULATOR IS THE CORRECT PART. A 50% TURN DOWN REGULATOR WILL HAVE ONLY ONE CORNER ON THE KNOB

Conversion Kit should contain the following:

(1) 50% turn down HI/LO regulator with three (3) T-20 Torx screws

(1) Pilot injector

Conversion instructions

Labels to show conversion

(1) Main Orifice (NG #39 DMS; LP #53 DMS)

Pilot Orifice (NG 0.62 mm; LP 0.35 mm)

Initial Installation

QUALIFIED INSTALLERS ONLY

Introduction:

This section of the owner's manual is for the use of qualified technicians only. Fireplace placement, hearths, facing, mantles, and venting terminations will be covered, as well as the gas and electric systems. There are several installation safety guidelines that must be adhered to. Please carefully read the safety precautions at the front of this manual.

Warning: Clearances must be sufficient to allow access for maintenance and service.

Placement and Framing:

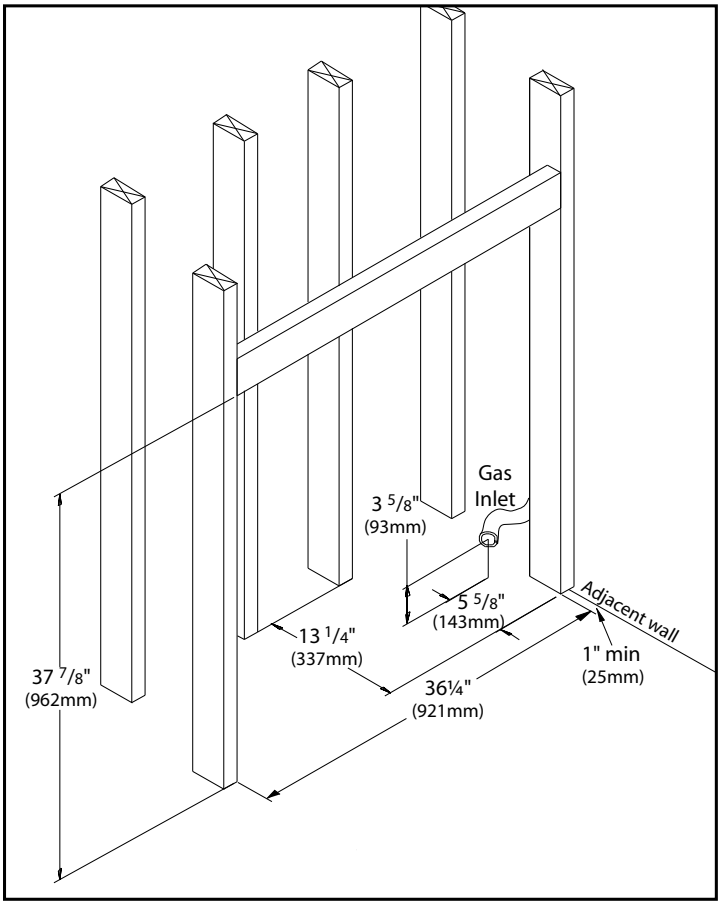

Figure 10. Dimensions for Framing the Firebox.

Table 1. Framing Dimensions.

Firebox Framing		
Depth	13¼"	33.7 cm
Width	36¼"	92.1 cm
Height	37⅛"	94.4 cm
Gas/Electrical Inlet:		
Distance back	5⅝"	14.3 cm
Distance up	3⅝"	9.3 cm

The location for the fireplace can be along a wall, raised or at floor level, or in a corner. There are specific framing measurements for each situation. The basic opening should have the dimensions shown in Figure 6.

The fireplace must have a strong and level surface to be placed on. The surface should be made of wood or a non-combustible material, not carpet.

The framing boards may touch the top and back standoffs, but **no insulating material can be placed between the frame and the standoffs.**

The gas line, ⅜ inch NPT, should be brought to the right side of the fireplace. If this set up is inconvenient, the electrical wire and the gas line configuration can be reversed.

The location should be chosen so the fireplace will be at least 36 inches (91.4 cm) from drapes, doors and other combustibles. The framed opening should also be a minimum of 1 inches (2.5 cm) from the nearest perpendicular wall (sidewall to the edge of the opening).

The VF36 is designed so it can be installed at floor level without a required hearth.

Initial Installation

QUALIFIED INSTALLERS ONLY

Framing Mount Brackets:

Mount the two framing mount brackets on each side and secure the fireplace to framing with screws or nails (refer to Figure 7). The brackets will allow for a ½" (13 mm), ⅝" (16 mm), ¾" (19 mm) thick finishing wall. The wall may be finished up to the fireplace facing with combustible material.

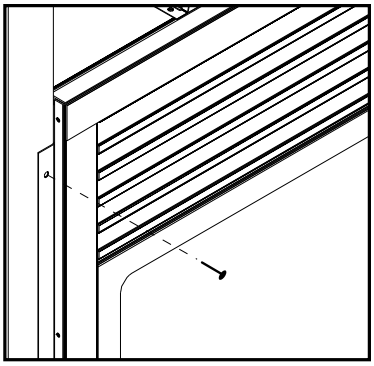

Figure 11. Nail Tab.

Corner Installation:

The dimensions for installing a fireplace in the corner of a room are given in Figures 12 and 13. Refer to "Initial Installation - Vent Configurations and Restrictor Settings" for allowable pipe lengths.

Do not interfere with the structural integrity of the walls.

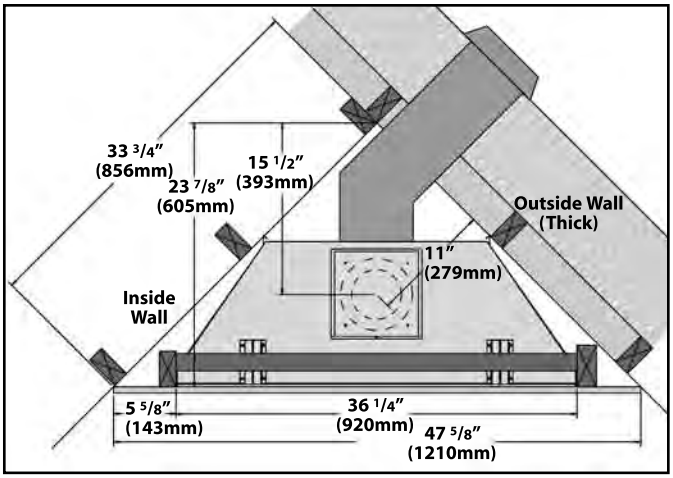

Figure 12. Dimensions for a corner installation, rear vented.

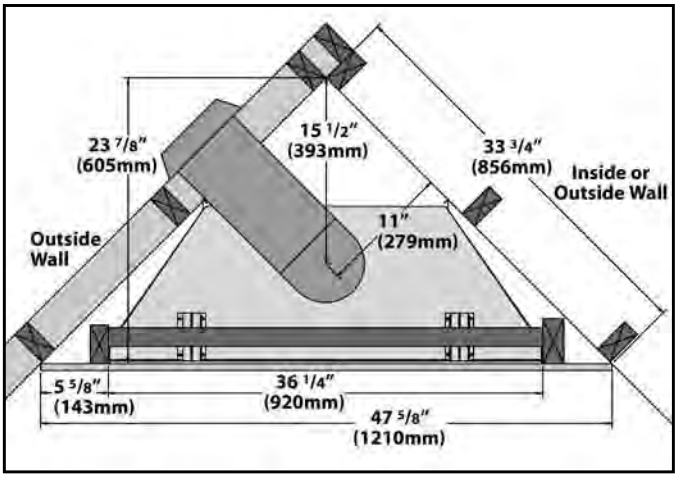

Figure 13. Dimensions for a corner installation, top vented.

Raised Fireplaces and Hearths:

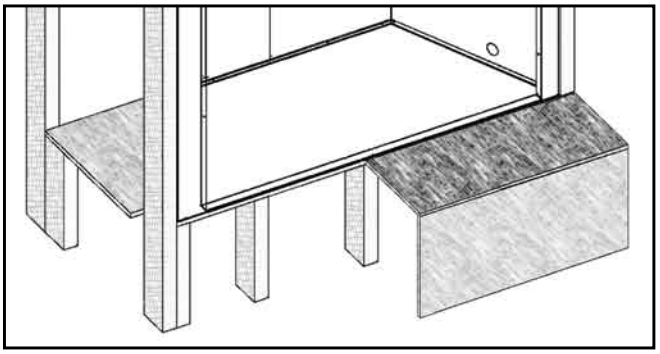

Figure 14. Raised Fireplace with Raised Hearth

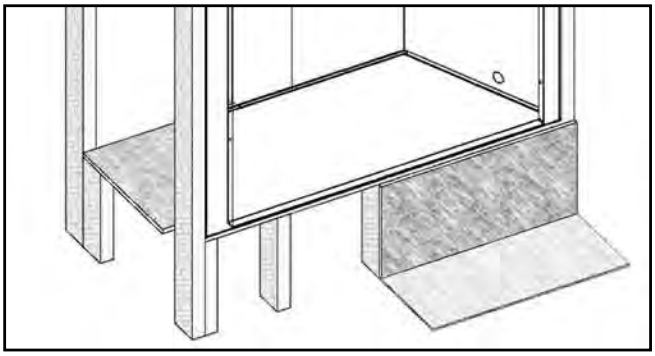

Figure 15. Raised Fireplace with Floor Level Hearth

Initial Installation

QUALIFIED INSTALLERS ONLY

Even though the VF36 can be installed at floor level without a hearth, there are a few options with raised fireplaces: raised with a floor level hearth (Figures 14), raised with a raised hearth (Figures 15), or raised with no hearth (Figures 16). If the fireplace is raised, it cannot be placed within 37 inches (1.04 m) of the ceiling. When installing a raised fireplace, it is imperative that the support stand is strong enough to hold the weight of the fireplace and venting.

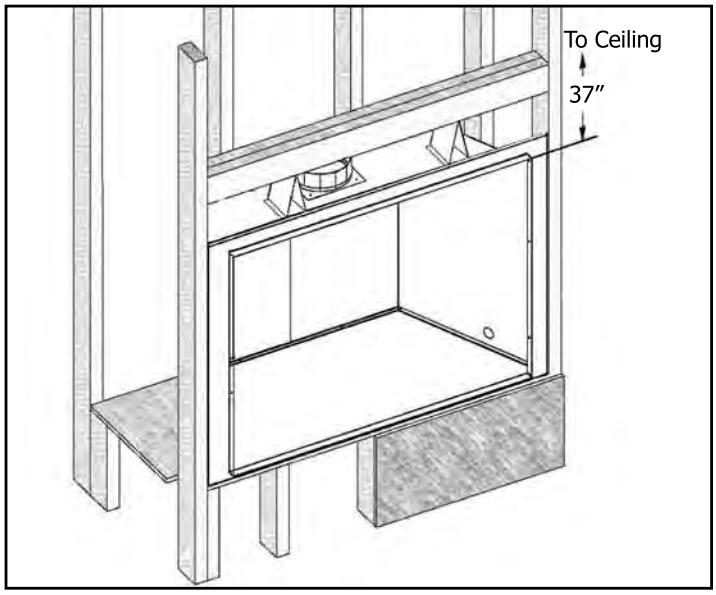

Figure 16. Raised Fireplace with no Hearth

MANTLE CLEARANCES:

It is not necessary to install a mantle, but if one is desired it is important to follow the guidelines.

Top of unit to horizontal framing:	3″	(7.6 cm)
Top of unit to bottom of 3½″ (8.9 cm) mantle:	8″	(20.3 cm)
Top of unit to bottom of 10″ (25.4 cm) mantle:	10″	(25.4 cm)

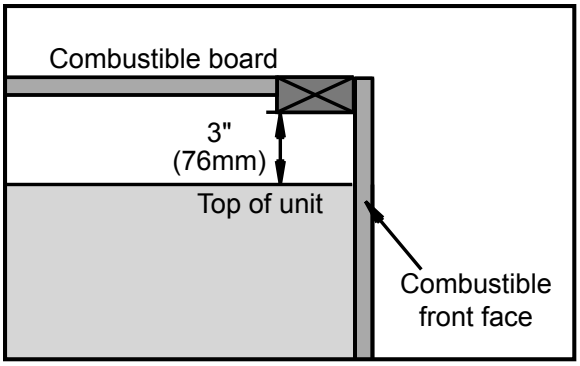

Figure 17. Combustible Shelf Clearance.

A shelf may be installed above the unit. We recommend that no heat sensitive items or components be placed on the shelf (see Figure 17).

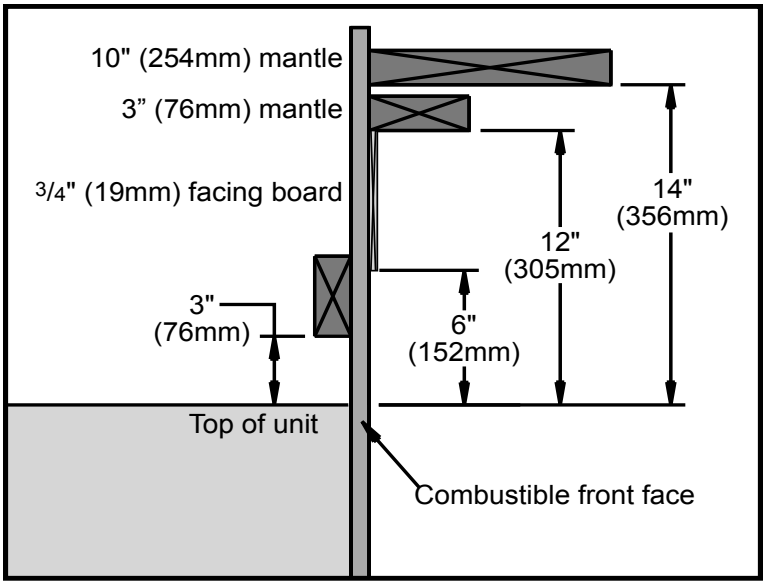

Figure 18. Combustible Mantle Clearances.

Initial Installation

QUALIFIED INSTALLERS ONLY

Vent Termination Restrictions:

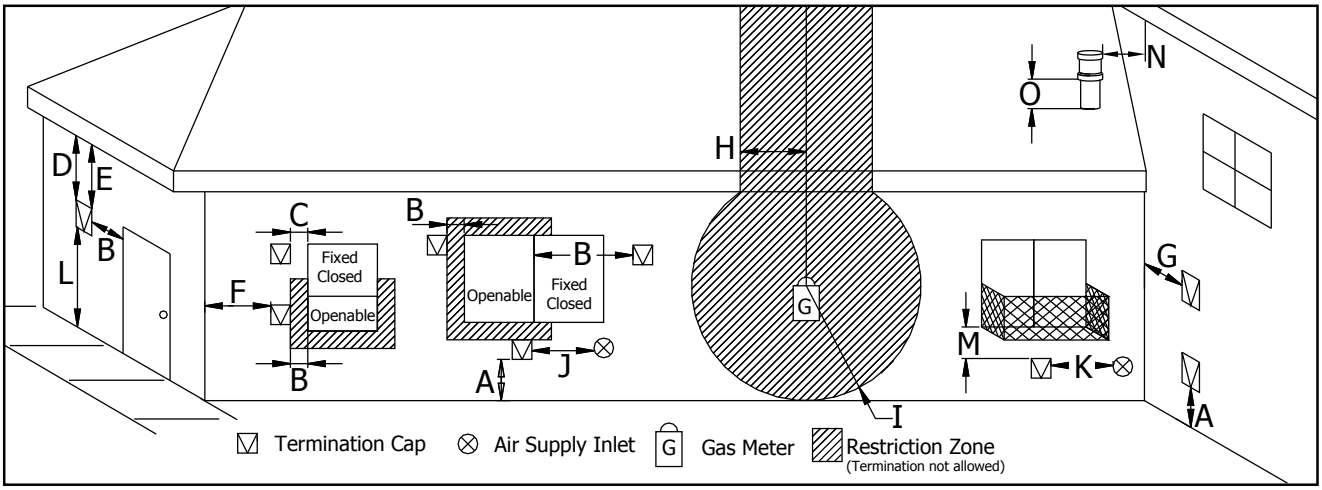

Figure 19. Vent Termination Restrictions, refer to Table 2.

Table 2: Vent termination clearances, refer to Figure 19.

Letter	Canadian Installation [1]	US Installation[2]	Description
A	12 in (30 cm)		Clearance above grade, verandah, porch, deck, or balcony.
B	12 in (30 cm)	9 in (23 cm)	Clearance from window or door that may be opened.
C	12 in (30 cm)*		Clearance from permanently closed window (to prevent condensation).
D	24 in (60 cm)*		Vertical clearance to ventilated soffit located above the terminal, within a horizontal distance of 2 ft (60 cm) from center line of terminal.
E	18 in (45 cm)*		Clearance to unventilated soffit.
F	12 in (30 cm)*		Clearance to outside corner.
G	12 in (30 cm)*		Clearance to inside corner.
H	3 ft (91 cm) within a height of 15 ft (4.5 m) above the meter/ regulator assembly	3 ft (91 cm) within a height of 15 ft (4.5 m) above the meter/ regulator assembly*	Clearance to each side of center line extended above meter/regulator assembly.
I	3 ft (91 cm)	3 ft (91 cm)*	Radial clearance around service regulator vent outlet.
J	12 in (30 cm)	9 in (23 cm)	Clearance to non-mechanical air supply inlet to building, or the combustion air inlet to any other appliance.
K	6 ft (1.83 m)	3 ft (91 cm) above if within 10 ft (3 m) horizontally	Clearance to mechanical air supply inlet.
L	7 ft (2.13 m)[t]	7 ft (2.13 m)*[t]	Clearance above paved sidewalk or paved driveway located on public property.
M	12 in / 30 cm[+]	12 in / 30 cm*[+]	Clearance under verandah, porch, deck, or balcony.
N	12 in (30 cm)*		Clearance horizontally to any surface (such as an exterior wall) for vertical terminations.
O	12 in (30 cm)		Clearance above roof line for vertical terminations.

[1] In accordance with the current CSA B149, Natural Gas and Propane Installation Code.
[2] In accordance with the current ANSI Z223.1 NFPA 54, National Fuel Gas Code.
* These numbers are only estimates. Clearance in accordance with installation codes and the requirements of the gas supplier.
[t] A vent shall not terminate directly above a side walk or paved driveway that is located between two single family dwellings and it serves both dwellings.
[+] Permitted only if verandah, porch, deck, or balcony is fully open on a minimum of two sides beneath the floor.

NOTE: Venting terminals shall not be recessed into walls or siding.

Initial Installation

QUALIFIED INSTALLERS ONLY

Vent Parts and Terminal Clearances:

Table 3: Vent part numbers.

Simpson Duravent (SD), Selkirk (SEL), and Security Chimneys (SC), must state if galvanized or black wanted, PART NUMBERS:

SD	SEL	SC	Description	SD	SEL	SC	Description
908	4DT-6	SV4L6	6" pipe length	911			11" to 14 5/8" pipe, adjustable
907	4DT-9		9" pipe length		4DT-AJ		4" to 10" pipe , adjustable
906	4DT-12	SV4L12	12" pipe length			SV4LA12	1½" to 12" pipe , adjustable
904	4DT-24	SV4L24	24" pipe length	943	4DT-AF6		Flashing, 0/12 to 6/12 roof pitch
903	4DT-36	SV4L36	36" pipe length	943S	4DT-AF12		Flashing, 7/12 to 12/12 roof pitch
902	4DT-48	SV4L48	48" pipe length			SV4FA	Flashing, 1/12 to 7/12 roof pitch
945	4DT-EL45	SV4EBR45	45° elbow, black			SV4FB	Flashing, 8/12 to 12/12 roof pitch
990	4DT-EL90	SV4EBR90	90° elbow, black	943F		SV4F	Flat flashing
950	4DT-VS	SV4VS	Vinyl siding standoff/ sheild	980	4DT-VC	SV4CGV	Vertical termination
942	4DT-WT	SV4RSN	Wall thimble	991	4DT-HVC		High wind vertical termination
953	4DT-SC	SV4FC	Storm collar	984	4DT-HC	SV4CHC	Horizontal square termination
963	4DT-FS	SV4BF	Fire stop	985	4DT-HHC		High wind horizontal termination
988	4DT-WS/B	SV4BM	Wall strap/support/band	978	4DT-VKC	SV0FAK	Vertical termination kit
970	4DT-HKA	SV0SHK	Horizontal termination kit (SD: Basic Kit, SEL: Kit A, SC: Standard Kit)	971	4DT-HKB	SV0SHK2	Horizontal termination kit (SD: Kit A, SEL: Kit B, SC: Kit)

The Sherwood Home Collection of fireplaces have been tested and certified for use with SIMPSON DURAVENT TYPE GS PIPE FOR GAS STOVES. SECURITY CHIMNEY'S "SECURE VENT DIRECT VENT SYSTEM" and SELKIRK "METALBESTOS MDV VENT SYSTEM" kits are available for horizontal venting. When using Simpson Duravent, it is recommended that, before installation, a bead of RTV High Temperature Silicone should be applied to each outer vent joint, and Mil-Pac to each inner joint. When planning an installation, it will be necessary to select the proper length of vent pipe for the particular requirements.

Venting:

This fireplace has been tested and certified for use with SIMPSON DURAVENT TYPE GS PIPE FOR GAS STOVES, SECURITY CHIMNEY'S "SECURE VENT DIRECT VENT SYSTEM" and SELKIRK "METALBESTOS MDV VENT SYSTEM"

A 1 inch (2.5 cm) clearance to combustibles must be maintained around any vertical vent pipe. Around a horizontal vent pipe, the clearance to combustibles should be 2 inches (5 cm) above and 1½ inches (4 cm) on the sides and bottom. When combustible materials are directly above a 90° elbow, 3 inches (7.6 cm) of clearance are necessary. A 10 inches (25 cm) x 10 inches (25 cm) frame will assure the proper support and spacing for the vent pipe as it passes through the wall. Installations in Canada require that a wall thimble be used for passing through walls and ceilings, see Figure 21. All sealing and vapour barriers must comply with local building codes.

Initial Installation

QUALIFIED INSTALLERS ONLY

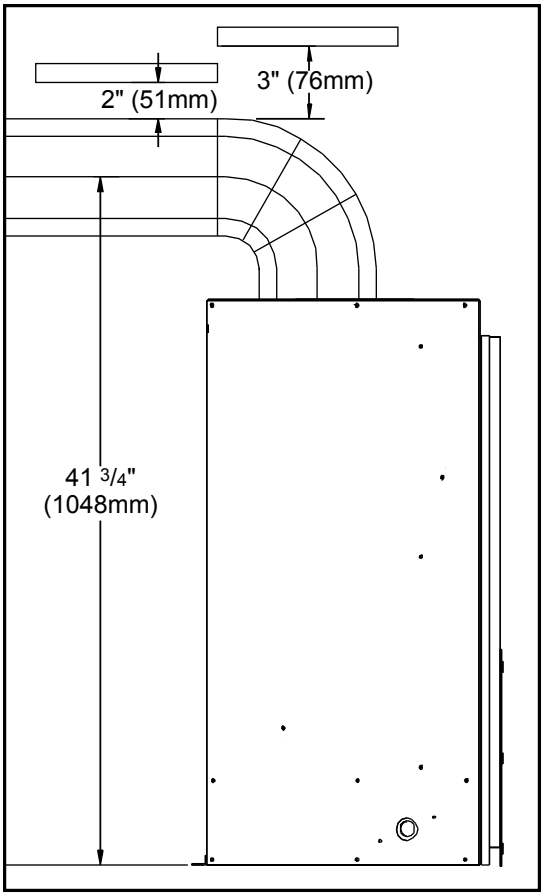

Figure 20. Vent Pipe Clearances.

When planning an installation, it is necessary to select the proper length of vent pipe for the particular requirements. The configuration of the venting pipes depends on the locations of walls, ceilings and studs. However, the pipes cannot be of arbitrary length and arrangement. Because the length of the vertical and horizontal sections dramatically affects the burning efficiency of the fireplace, certain guidelines have been set in the Vent Configurations section.

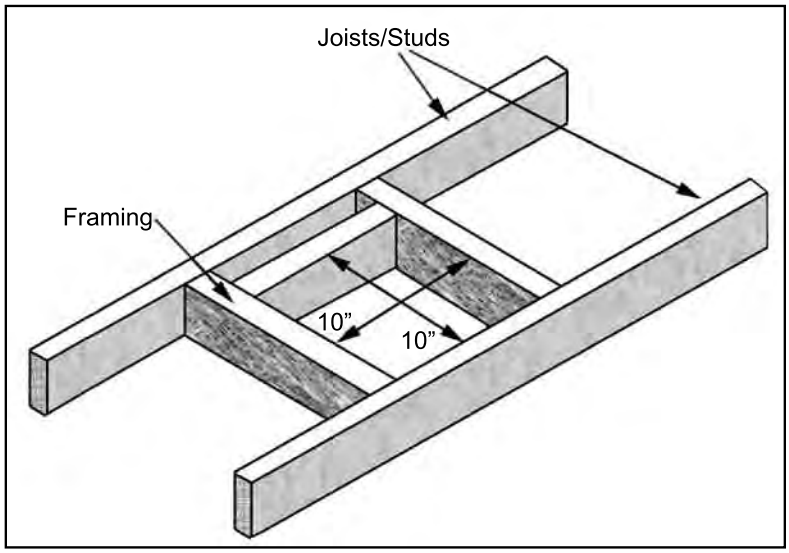

Figure 21. Vent Framing Through Wall/Ceiling.

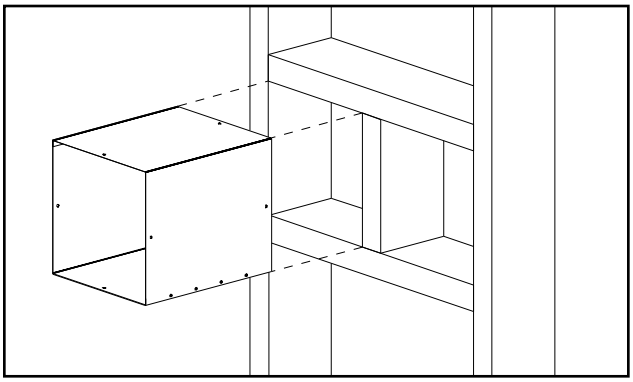

Figure 22. Wall/Ceiling Thimble provided.

Venting terminals cannot be recessed into a wall or siding.

A two (2) piece wall/ceiling thimble is included with the stove (see Figure 22).

Initial Installation

QUALIFIED INSTALLERS ONLY

Vent Configurations and Restrictor Settings:

Figures 23 shows the range of venting options, it shows possible vent configurations if the unit is top vented, for vertical and horizontal terminations, any layout that remains within the shaded area is acceptable. Having the fewest number of elbows is ideal, as they tend to disrupt air movement. Using 45˚ elbows is preferable to using 90˚ elbows. Also, a shorter vent system will perform better than a longer one.

The vent restrictor controls the amount of air moving through the vent pipe. Longer vertical vent lengths necessitate greater restriction; position 1 is open and position 5 is maximum restriction. Figure 23 shows the vent restrictor position required, relative to the length of vent pipe. The vent restrictor is located in the center of the fireplace, above the glass. Figure 24 shows the vent restrictor dial and the holes that indicate the different levels. To avoid injury, it is best to make this adjustment when the fireplace is cool or use welder's gloves or oven mitts.

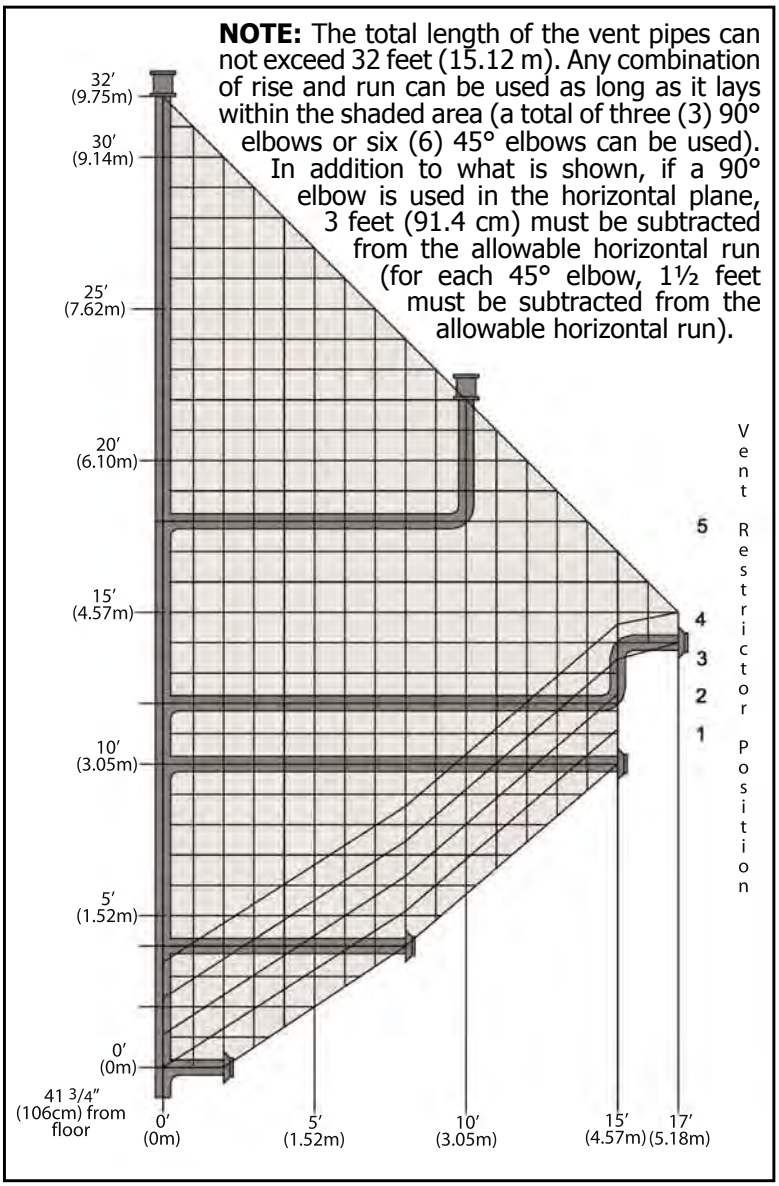

Figure 23. Possible Vent Configurations for Top Vented; Vertical and Horizontal Terminations.

Note: 0,0 in Figure 23 represents a 90˚ bend directly off the outlet of the unit, 41¾ inches (106 cm) from floor, in all horizontal instances **except** when using Selkirk and having less than a 4 feet (1.22 m) rise and 8 feet (2.44 m) horizontal offset. In this case, a 1 foot (30.5 cm) rise must be added below the 90˚ bend.

Note for rear vented: At 29⅜ inches (75 cm) up, the maximum horizontal rear exit vent length is 17 inches (43 cm) with a 45° elbow (see Figure 12).

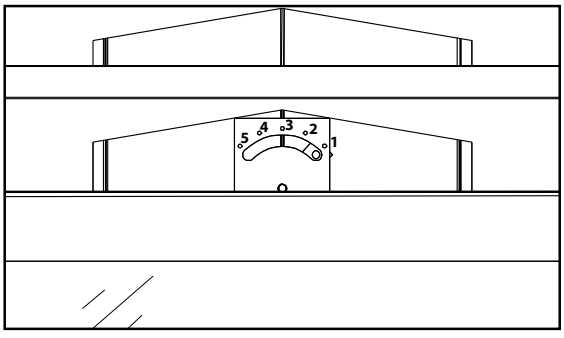

Figure 24. Possible Vent Restrictor Positions.

Initial Installation

QUALIFIED INSTALLERS ONLY

Horizontal Termination:

NOTES:

1. **Horizontal pipes must not be level. For every 12 inches (305 mm) of horizontal travel (away from the stove), there should be at least ¼ inch (6.4 mm) of vertical travel. Never allow the vent to run downward, as this could cause high temperatures or even present the possibility of a fire.**
2. The exterior of the horizontal vent termination must not be blocked or obstructed.
3. If the vent termination is not being attached to wood, the four wood screws provided should be replaced with material appropriate fasteners.
4. For buildings with vinyl siding, a vinyl standoff should be installed between the vent cap and the exterior wall. Attach the vinyl siding standoff to the horizontal termination. Note that the termination bolts onto the flat portion of the standoff, providing an air space between the wall and the vent termination. The air gap prevents excessive heat from possibly melting the vinyl siding.
5. Horizontal pipes must be supported every 3 feet (914 mm). Plumber's all round strap will suffice.

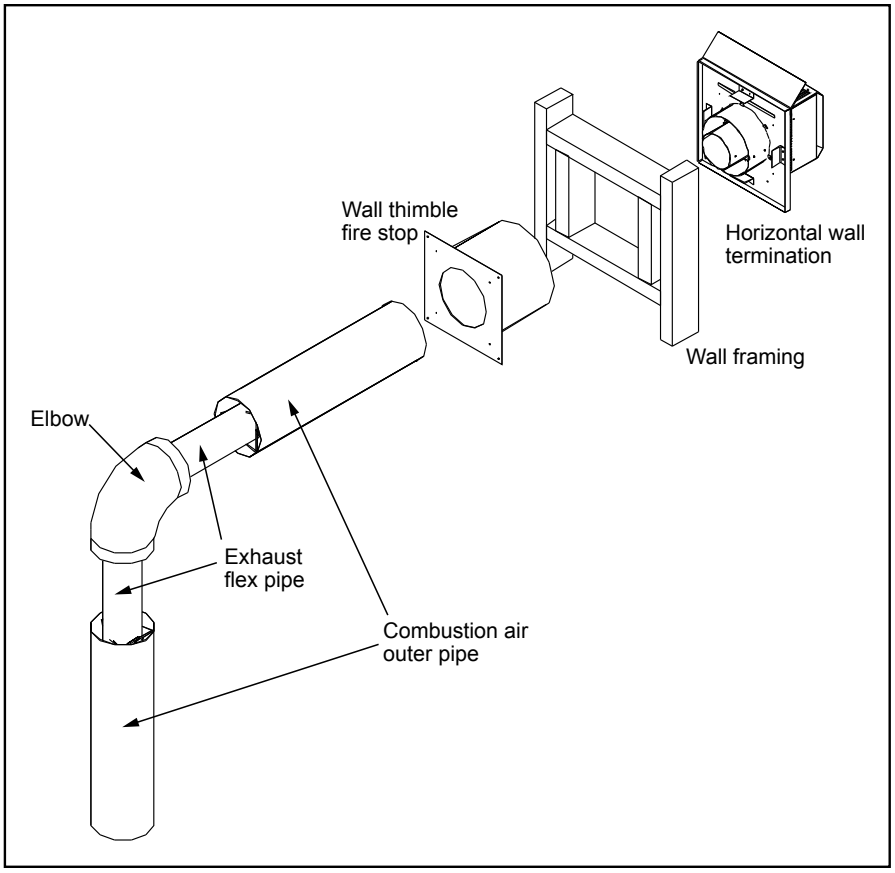

Figure 25. Horizontal Vent Termination

6. When running horizontal pipe, clearances to combustibles must be maintained 1½ inches (38 mm) sides, 1½ inches (38 mm) bottom, and 2 inches (51 mm) top.

Step 1. Set the fireplace in the desired location. Check to determine if wall studs will be in the way when the venting system is attached. If this is the case, the location of the fireplace may have to be adjusted or the venting may have to be offset.

Step 2. Direct vent pipe sections are designed with special twist-lock connections. Dry fit the desired combination of pipe and elbows to the appliance adaptor.

Step 3. With the pipe in the correct position and attached to the fireplace, mark the wall for a 10 inches (25.4 cm) x 10 inches (25.4 cm) square hole (see Figure 21). The center of the hole should match the center line of the horizontal pipe. Cut and frame the hole in the exterior wall where the vent will be terminated. If the wall being penetrated is made of a non-combustible material (i.e. masonry or concrete) a 7 inches (17.8 cm) hole is acceptable.

QUALIFIED INSTALLERS ONLY

NOTE: For Simpson Duravent only, place a bead of Mil-Pac or Rutland No 78 Stove and Gasket Cement on the outer edge of the inner exhaust pipe (non-flared end). Push the pipe sections together, then twist about ¼ turn, making sure the two sections are fully locked. Wrap all seams with foil ducting tape.

Step 4. With the hole now framed, the wall thimble installed, and the pipe extending into the wall, proceed to the outside. Attach the termination to the pipe using RTV and Mil-Pac or Rutland No 78 Stove and Gasket Cement to seal joints. The vent pipe must extend into the vent cap at least 1¼ inches (3.2 cm). Secure the connection between the vent cap and the pipe by attaching the two (2) sheet metal straps, which extend from the vent cap assembly to the outer wall of the vent pipe. Bend any remaining portion of the strap back towards the vent cap. Security Secure Vent uses a twist lock cap.

Step 5. Position the horizontal vent termination in the center of the 10 inches (25.4 cm) square hole and attach to the exterior wall with the four screws provided. The arrow on the vent termination should be pointing up. Run a bead of non-hardening mastic around the edges of the vent cap, to make a seal with the wall. Ensure the proper clearances to combustibles have been maintained.

VERTICAL TERMINATION:

Step 1. Check the instructions for required clearances (air spaces) to combustibles when passing through ceilings, walls, roofs, enclosures, attic rafters, or other nearby combustible surfaces. Do not pack air spaces with insulation.

Step 2. Set the gas appliance in the desired location. Drop a plumb bob down from the ceiling to the position of the appliance flue exit, and mark the location where the vent will penetrate the ceiling. Drill a small hole at this point. Next, drop a plumb bob from the roof to the hole previously drilled in the ceiling, mark the spot where the vent will penetrate the roof. Determine if ceiling joists, roof rafters, or other framing will obstruct the venting system. You may wish to relocate the appliance, or to offset, to avoid cutting load bearing members.

Step 3. To install the Round Support Box/Wall Thimble in a flat ceiling, cut a 10 inch (25.4 cm) square hole in the ceiling, centered in the hole drilled in Step 2. Frame the hole as shown in Figure 21.

Step 4. Assemble the desired lengths of black pipe and elbows necessary to reach from the appliance adapter up through the Round Support Box. Insure that all pipe and elbow connections are in their fully twist-locked position.

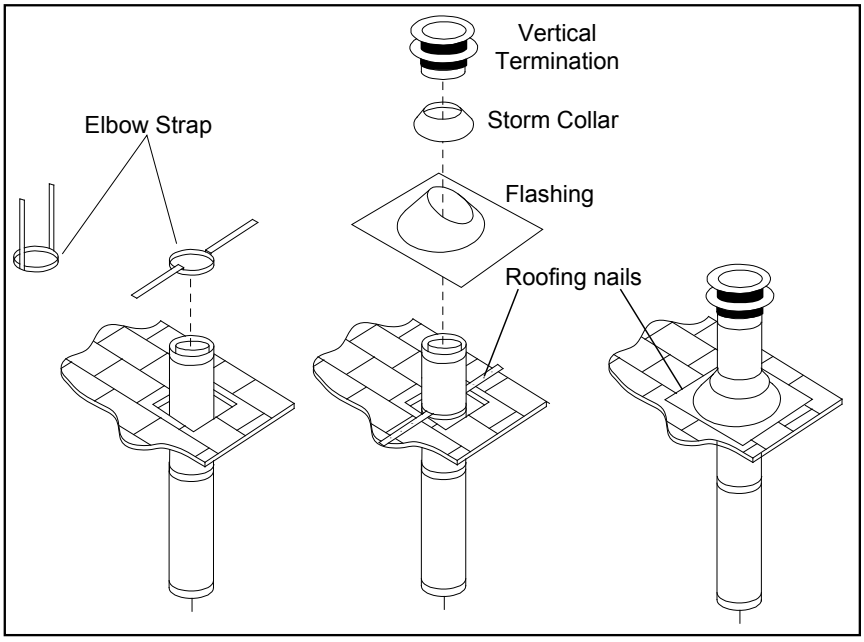

Figure 26. Vertical Vent Termination

STEP 5. Cut hole in the roof centered on the small hole placed in the roof from Step 2. The hole should be of sufficient size to meet minimum requirements for Clearance to Combustibles, as specified. Continue to assemble lengths of pipe and elbows necessary to reach from the ceiling support box up through the roof line. Galvanized pipe and elbows may be utilized in the attic, as well as above the roof line. The galvanized finish is desirable above the roof line, due to the higher corrosion resistance.

STEP 6. Once the pipe sections have been joined, and run up through the hole in the roof, slip an elbow strap over the exposed sections, bend the support straps outwards, and push the elbow strap down to the roof level, as shown in Figure 26. Tighten the clamp around the pipe section. Use a level to make sure the pipe is truly vertical. With roofing nails, secure the support straps to the roof. Seal the nails holes heads with non-hardening mastic. Trim the excess length of the support straps that extend out beyond the edge of the flashing.

STEP 7. Slip the flashing over the pipe section protruding through the roof. Secure the base of the flashing to the roof with roofing nails. Use a non-hardening sealant between the uphill edge of the flashing and the roof. Insure the roofing material overlaps the top edge of the flashing. Verify that you have at least the minimum clearance to combustibles at the roof line.

STEP 8. Continue to add pipe sections until the height of the vent cap meets the minimum code requirements. Refer to Figure 26 and Table 3. Note that for steep roof pitches, the vent height must be increased. In high wind conditions, nearby trees, adjoining roof lines, steep pitched roofs, and other similar factors can result in poor draft, or down drafting. In these cases, increasing the vent height may solve the problem.

STEP 9. Slip the storm collar over the pipe, and push it down to the top of the roof flashing as shown in Figure 26. Use the non-hardening sealant around the joint between the pipe and the storm collar.

STEP 10. Twist-lock the vent cap.

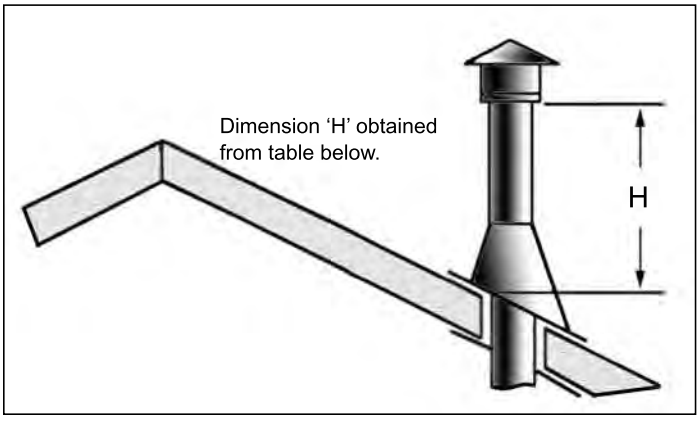

Figure 27: Height of Vertical Termination; Reference Table 4.

Table 4: Minimum 'H' for Figure 27.

Roof Pitch	Minimum Height (H)	
	Feet	Meters
Flat to 7/8	1	0.3
Over 7/12 to 8/12	1.5	0.46
Over 8/12 to 9/12	2	0.61
Over 9/12 to 10/12	2.5	0.76
Over 10/12 to 11/12	3.25	0.99
Over 11/12 to 12/12	4	1.22
Over 12/12 to 14/12	5	1.52
Over 14/12 to 16/12	6	1.83
Over 16/12 to 18/12	7	2.13
Over 18/12 to 20/12	7.5	2.29
Over 20/12 to 21/12	8	2.44

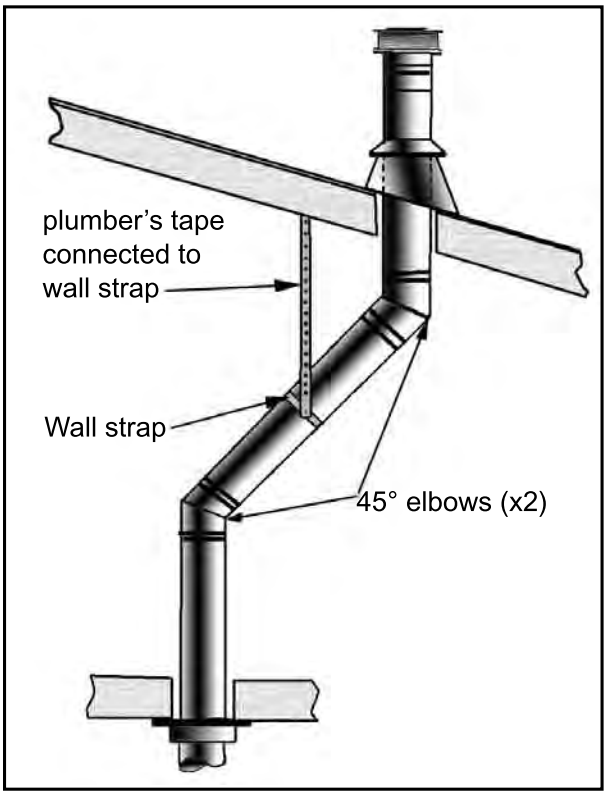

Figure 28: Use of Wall Straps.

(4) Any occupied areas above the first floor, including closets and storage spaces, which the vertical vent passes through, must be enclosed. The enclosure may be framed and sheet-rocked with standard building materials. However consult the appliance manufactures installation instructions for the minimum allowable clearance between the outside of the vent pipe, and the combustible surfaces of the enclosure. Do not fill any required air spaces with insulation.

NOTES:

(1) If an offset is necessary in the attic to avoid obstructions, it is important to support the vent pipe every 3 feet (914 mm), to avoid excessive stress on the elbows, and possible separation. Wall straps are available for this purpose (see Figure 28).

(2) When ever possible, use 45° degree elbows instead of 90° degree elbows. The 45° degree elbow offers less restriction to the flow of flue gases and intake air.

(3) For multi story installations; a ceiling firestop is required at the second floor, and any subsequent floors (see Figure 29). The opening should be framed to 10" (254 mm) x 10" (254 mm) inside dimensions, in the same manner as shown in Figure 21.

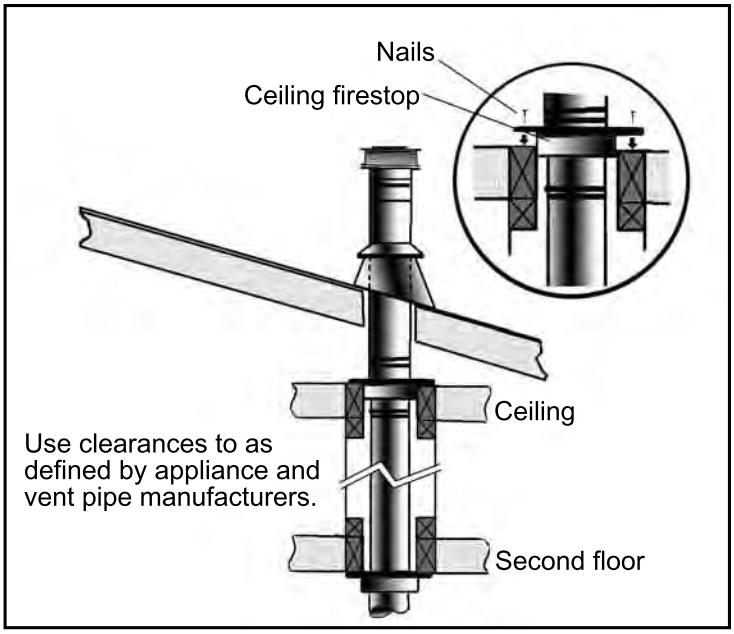

Figure 29: Multi-Story Vent Pipe Installation.

Initial Installation

QUALIFIED INSTALLERS ONLY

Installation Of Electrical Wiring For The Optional Fan Kit:

The electric box/outlet must be hard wired to the bottom left (or right if the gas line is to come in on the left) of the unit if you plan to install the Optional Fan Kit in the future.

Refer to local electrical bylaw for proper installation. In the absence of local codes, with the current CSA C22.1 Canadian Electrical Code Part 1, Safety Standards For Electrical Installations, or The Current National Electrical Code ANSI / NFPA 70 in the US.

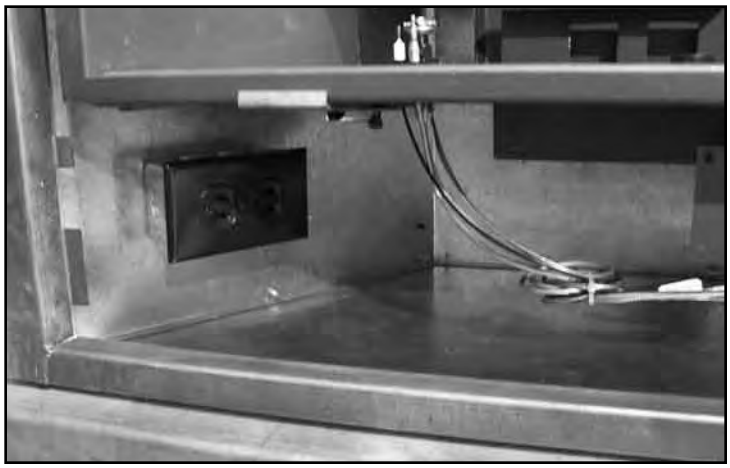

Figure 30. Install Electrical Outlet Into VF36.

Electrical System For Thermostat:

CAUTION: Label all wires prior to disconnection when servicing controls. Wiring errors can cause improper and dangerous operation. Verify proper operation after servicing.

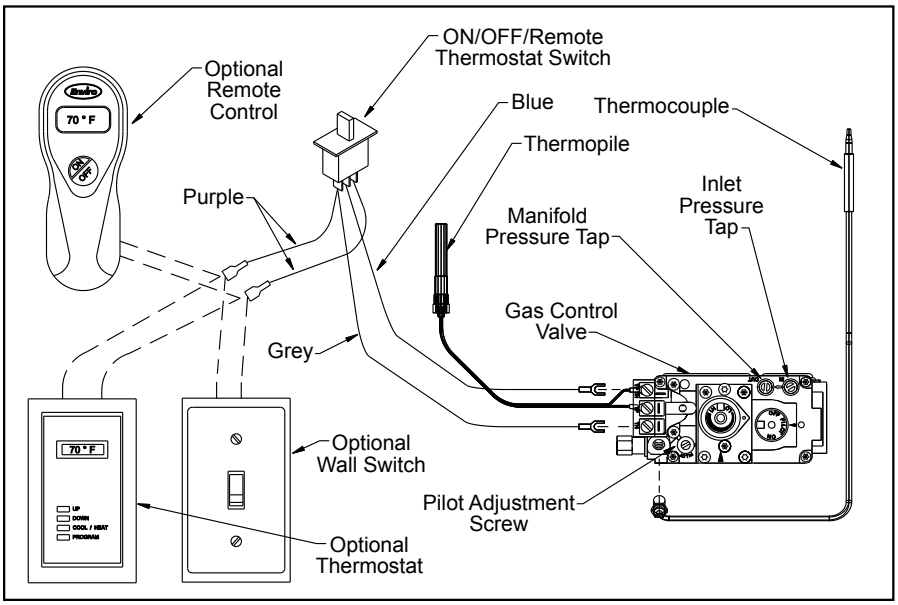

Figure 31. Wiring Diagram For Gas Valve.

Table 5. Recommended Thermostat Wire Size.

Wire Size	Max. Length
14 gauge	100 ft (30.48 m)
16 gauge	60 ft (18.29 m)
18 gauge	40 ft (12.00 m)
20 gauge	25 ft (7.62 m)
22 gauge	18 ft (5.49 m)

Initial Installation

Gas Line Connection and Testing:

WARNING: Only persons licensed to work with gas piping may make the necessary gas connections to this appliance.

GAS LINE CONNECTION

- This stove is equipped with a certified flexible pipe located on the right side of the unit terminating in a ⅜" male NPT fitting. Consult your local authorities codes or the CAN/CGA B 149 (1 or 2) installation code in Canada, or in the USA gas installations follow either local codes or the current edition of the National Fuel Gas Code ANSI Z223.1.
- The efficiency rating of this appliance is a product thermal efficiency rating determined under continuous operating conditions and was determined independently of any installed system.

The appliance and its shutoff valves must be disconnected from the gas supply piping system during any pressure testing where the pressure exceeds ½ PSIG (3.45 KPa) or damage will occur to the valve.

The appliance must be isolated from the gas supply piping system by closing its individual manual shutoff valve during any pressure testing of the gas supply piping system at test pressures equal to or less than ½ psig (3.45 KPa).

Always check for gas leaks with a soap and water solution after completing the required pressure test.

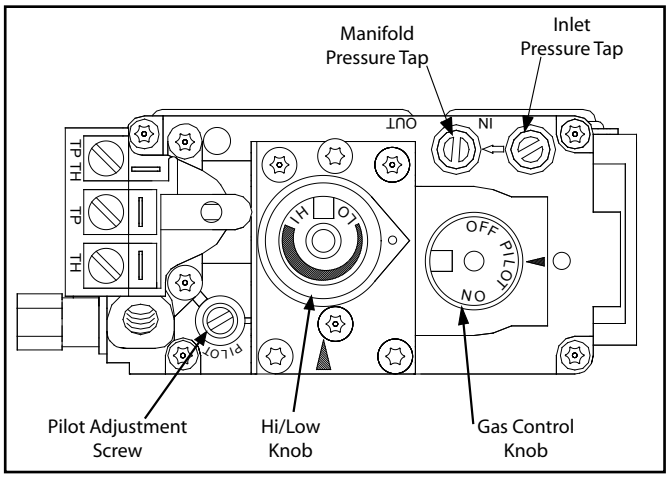

Figure 32: Fully Labeled Gas Valve.

TO TEST VALVE PRESSURES

The pressure taps are located on the top right of the valve shown in Figure 32.

- Turn set screw 1 turn counter clockwise to loosen,
- Place 5/16" (8 mm) I.D. hose over pressure tap system.
- Check pressures using a manometer.
- When finished, release pressure, remove hose & tighten set screw.

Table 5: Pressure and BTU Information.

	Natural Gas	Propane
Main Orifice	#39 DMS	#53 DMS
Manifold Pressure	3.8" W.C. (0.95 KPa)	11.0" W.C. (2.74 KPa)
Min. Manifold Pressure	1.2" W.C. (0.28 KPa)	2.7" W.C. (0.67 KPa)
Max Supply Pressure	7.0" W.C. (1.74 KPa)	13.0" W.C. (3.28 KPa)
Min. Supply Pressure	5.0" W.C. (1.25 KPa)	12.0" W.C. (2.98 KPa)
Max BTU/hr Input	31,300 BTU/hr (9.17 KW)	28,800 BTU/hr (8.44 KW)
Min. BTU/hr Input	17,500 BTU/hr (5.13 KW)	14,900 BTU/hr (4.37 KW)

NEVER USE AN OPEN FLAME FOR LEAK TESTING.

Secondary Installation

Log Set and Ember Installation:

The placement of the logs is not arbitrary. If they are positioned incorrectly, the flames can be "pinched" and will not burn correctly. The burner (shown in Figure 33), and a few of the logs come with locator pins, notches and ledges, which make alignment easier. Using the pictures provided, carefully set the logs in place (see Figures 34 through 39).

NOTE: The logs are fragile and should be handled gently.

Figure 33: This is how the fire box looks with only the grate and Optional Brick Panels in place. The burner has three (3) locator pins for the logs.



Figure 33. Empty firebox with grate and locator pins.

Figure 34: The first log to be placed is the **back log**. It leans on the back of the firebox, push it back as far back as you can.



Figure 34. First Stage Log Set Installation.

Figure 35: The **left log** has two (2) holes in it that will rest over the two (2) locator pins pointed out in Figure 34.



Figure 35. Second Stage Log Set Installation.

Secondary Installation

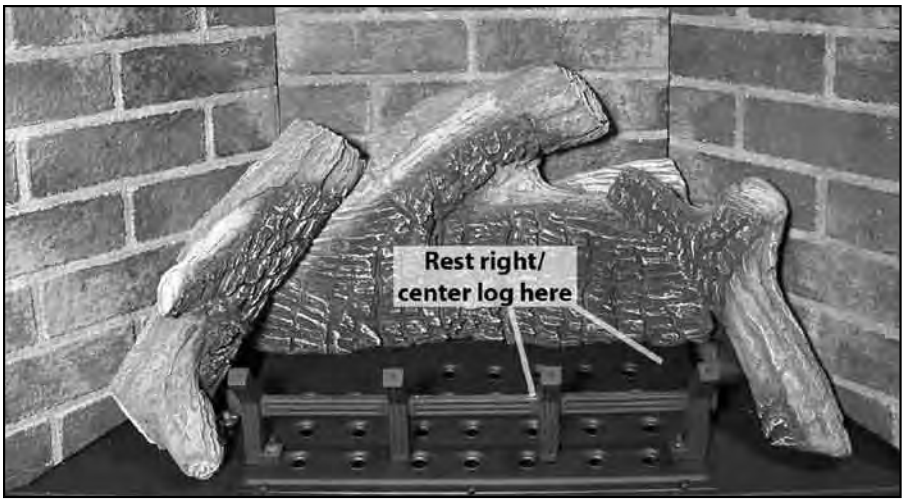

Figure 36. Third Stage Log Set Installation.

Figure 36: The **right log** has two (2) holes in it that will rest over the two (2) locator pins pointed out in Figure 35.



Figure 37. Fourth Stage Log Set Installation.

Figure 37: The front end of the **right/center log** has a notch in it that is to rest around the right/ center post of the grate. The back end of the log rests on the burner tray, refer to Figure 36. Ensure the log does not block any burn ports.



Figure 38. Fifth Stage Log Set Installation.

Figure 38: The bottom of the **left/center log** will rest over the locator pin on the pan burner and against the grate. The top half of the log must rest against the back log, see Figure 37. The center spot shown in Figure 37 is a knot in the back log for the left/center log to rest against. Ensure the log does not block any burn ports.



Figure 39: Once the logs are in place the embers can be placed onto and around the burner to create a realistic look. Bags of ceramic fiber embers and rock wool are provided. The ceramic fiber comes in chunks that are about 2 inches (5.1 cm) long. Place them irregularly around the burner. When there is a sparse but even layer of embers, spread the rock wool in the same manner.

Figure 39. Complete log set-up with embers.

WARNINGS: DO NOT pack this ember material as this could create an unsafe condition. The pieces should be lightly placed so they don't block any of the burner ports. DO NOT allow any of the embers to rest against the pilot assembly.

Caution: Use only the type of ember material supplied with this fireplace. Due to the irregular size of the ember material, there may be more than required. Use of other foreign materials on the burners may create dangerous conditions.



Figure 40: The VF36 burning with a good flame.

Figure 40. VF36 complete log set-up with embers burning.

NOTE: While the glass is still removed, it is recommended that the gas line be purged by lighting the pilot.

When lighting the fireplace for the first time since the log set and embers have been installed/replaced, watch for ignition at ALL the burner ports. If a long delay is noticed, turn the appliance off and wait for it to cool down. Then remove the glass and rearrange the ember material, making sure none of the burner ports are blocked.

Maintenance: Once a year, the logs should be removed and checked for deterioration or large amounts of soot. A small amount on the bottom side of the logs is normal. Remove and replace the logs in the same manner described above.

If new/more embers and rock wool are required, contact your nearest Vista Flame dealer.

Never operate the fireplace with the glass door removed.

Secondary Installation

Optional Ceramic Brick Panel Installation:

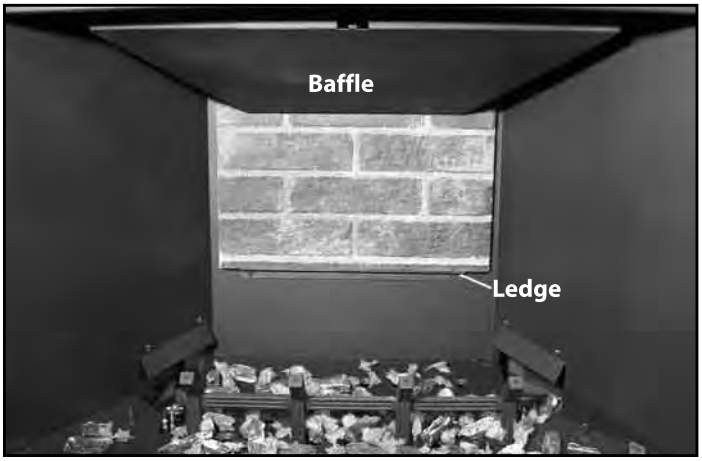

Figure 41. Back Panel In Place.

Turn off the gas control knob and allow the unit to cool.

Please ensure that your ceramic panels have not been damaged.

To Install Panels:

1. Remove the glass door by following the instruction in the "Secondary Installation - Glass Door Removal" section and remove logs if necessary.

2. Slide center brick panel up behind the baffle (shown in Figure 41) and rest the bottom of the panel on the ledge.

3. Using a flat head screwdriver, bend the top tabs on either side at the front of the baffle down (refer to Figure 43 for placement).

4. Slide the right panel along the side of the firebox until it is tight against the right side of the center panel. Ensure the panel is behind the top tab (see Figure 42).

5. Bend up the right bottom tab until it touches the bottom of the right panel (see Figure 44) and press the top right tab tight against the top of the panel (see Figure 43).


Figure 42. Right Panel In Place.

6. Repeat steps 4 and 5 for the left panel.

7. Install the log set (refer to Secondary Installation - Log Set and Ember Installation) and glass door.

To Remove Panels:

1. Pull the bottom and top tabs away from the side panels.

2. Carefully slide the side panels out towards the front, do not slide the panels on the tabs.

3. Push the center panel straight up about ¼ inch (½ cm), pull the bottom out past the ledge, then pull the panel down until it is past the bottom of the baffle. Remove panel from firebox

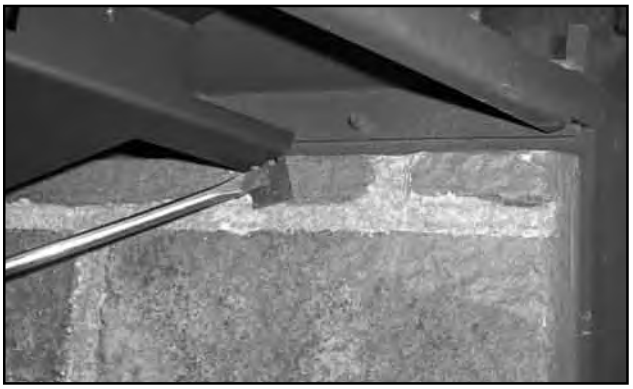
Figure 43. Top Tab For Right Panel.

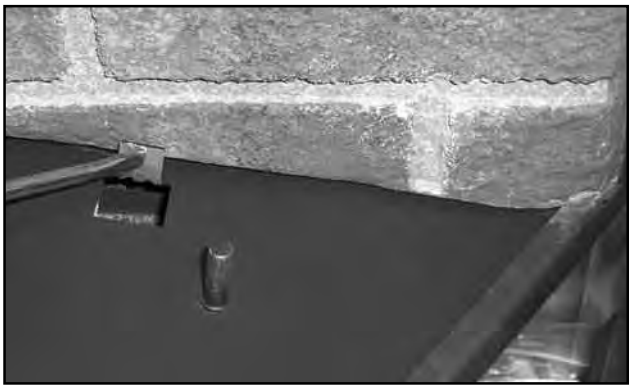
Figure 44. Bottom Tab For Right Panel.

Secondary Installation

QUALIFIED INSTALLERS ONLY

Optional Fan Kit Installation:

The optional fan is thermostatically controlled and it will not operate if the appliance is cold. A few minutes after the appliance is lit and the variable speed control is set at a desired setting, the fan will automatically turn on. The fan will automatically turn off a few minutes after the appliance is shut off.

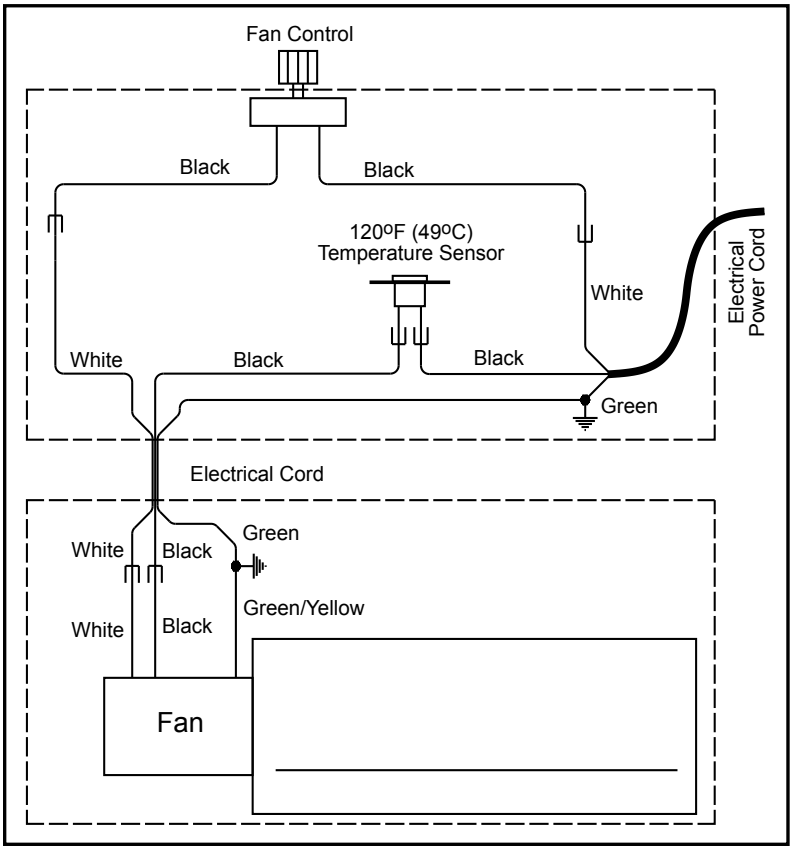

Figure 45. Wiring Diagram For Fan Control.

The fireplace must be electrically connected and grounded in accordance with local codes or, in the absence of local codes, with the current CSA C22.1 Canadian Electrical Code Part 1, Safety Standards For Electrical Installations, or The National Electrical Code ANSI / NFPA 70 in the US.

WARNING: The electrical grounding instructions must be followed. The fan kit is equipped with a three-prong (grounding) plug for your protection against shock hazard, and should be plugged directly into a properly grounded three-prong outlet. DO NOT cut or remove the grounding prong from this plug.

CAUTION: When servicing controls, label all wires prior to disconnection. Wiring errors can cause improper and dangerous operation. Verify proper operation after servicing.

Kit Contents:

This kit includes a fan assembly (a fan within a box housing connected by a wire to the fan control box then ends at a three prong plug) and two (2) T-20 torx screws.

Please ensure that your fan kit has not been damaged. If so, contact your dealer, distributor, or courier company before starting this installation.

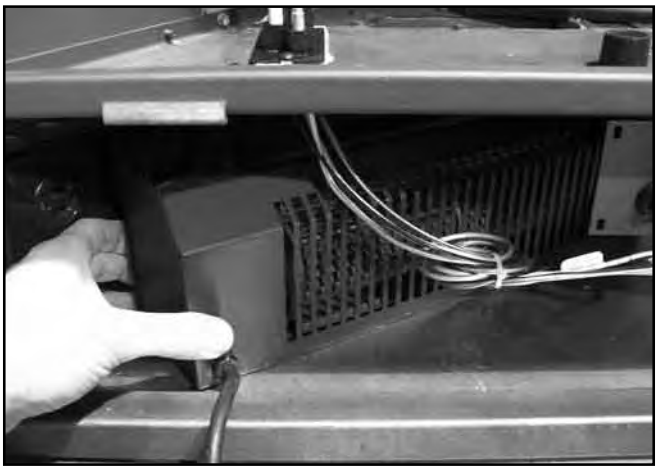

Figure 46. Placing Fan Kit Into VF36

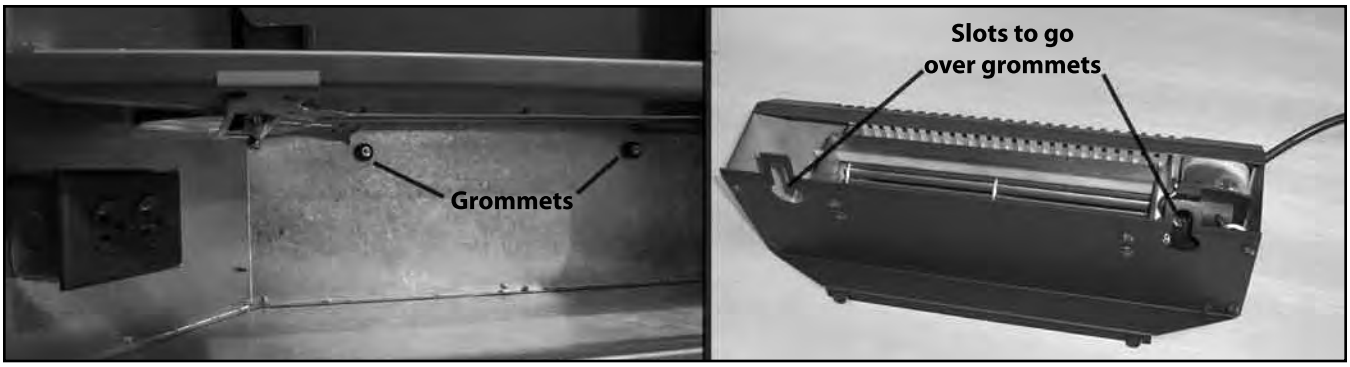

Figure 47. Hook Fan Tabs Over Grommets at Unit Back.

Installation of Kit:

1. Ensure the appliance is turned off and cool.

2. Remove the bottom louvers.

3. Place fan in lower area of unit behind the controls (see Figure 46).

4. Hook the two (2) slots on the fan box over the two (2) grommets on the back wall, refer to Figure 47.

5. Using two (2) T-20 screws, attach the fan control box to the ignitor control panel, refer to Figure 48. Before tightening the screws ensure that the thermal switch on top of the box firmly contacts the firebox bottom.

6. Plug the fan into the hard wired electrical box/outlet (refer to Figure 49) that was installed in the "Initial Installation - Installation of Electrical Outlet For Optional Fan Kit".



Figure 48. Install Fan Control Box.



Figure 49. Plug In Fan Kit.

Trouble Shooting

Problem	Possible Cause	Solution
Spark will not light the pilot after repeatedly pressing the spark ignitor	Defective piezo ignitor	• Check connections to ignitor. • If ignitor connections are good but no spark, replace ignitor.
	Broken spark electrode	• Check for broken ceramic insulation, replace electrode if broken.
	Misaligned spark electrode	• If spark is not arcing from electrode to pilot, loosen the screws on the pilot base adjust and tighten.
Pilot will not remain lit	Problem with thermocouple circuit	• Check for proper connection of the thermocouple to the rear of the valve. If loose, fully tighten. • Check pilot for full flame impingement around thermocouple. If flame is too small, check gas pressure, adjust pilot rate screw, check pilot head for damage. • Check thermocouple voltage at valve. It must be greater than 5 mV. If low, replace thermocouple.
	Air in gas line (pilot dies while knob is depressed)	• Bleed line. • Check gas line pressure. • Contact dealer.
Burners will not remain lit	Problem with thermopile circuit	• Check gas line pressure . • Check for flame impingement on thermopile. If low, see "Pilot will not remain lit". • Check thermopile for minimum of 300 mV when burner is switched on. • Check wiring to thermostat for breaks.
Flame lifting	Leak in vent pipe	• Check for leaks in vent connections.
	Improper vent configuration	• Check vent configuration with manual.
	Terminal may be recirculating flue gases	• Check to see if terminal is on correctly. • May need to install high wind termination cap. • Contact dealer.
Glass fogs up	Normal Condition: after the appliance warms up the glass will clear. **Due to additives in gas, glass may get hazy during operation** Clean as needed.	
Blue Flames	Normal during start up: flames will yellow as the fireplace heats up.	
Flames are burning "dirty" or sooting	Flame impingement	• Check log positioning. • Increase primary air by opening the venturi shutter and/or by opening the vent restrictor. See also "Burners will not remain lit."
Remote control doesn't work	Problem with the remote	• One or more of the batteries are dead. See remote control instructions.
	Problem with fireplace	• The on/off switch is turned to OFF. • The gas control valve is turned to PILOT or OFF. • The pilot has gone out.

Parts List

Reference Number	Part Description	Part Number
1	120°F Ceramic Fan Temperature Sensor	EC-001
2	S.I.T. Nova Valve NG (50% turn down)	EC-006
2	S.I.T. Nova Valve LP (50% turn down)	EC-007
3	Thermocouple	EC-009
3	Spark Electrode with Ignitor Cable	EC-011
3	Thermopile	EC-012
3	Pilot Orifice NG Threaded	EC-019
3	Pilot Orifice LP Threaded	EC-020
3	Pilot Gasket	EC-021
4	S.I.T. Piezo Ignitor	EC-023
5	Fan Controller - 115V	EC-039
6	Convection Blower - 115V	EC-069
	SIT Pilot ⅛” Tube with End Furrels (1 piece)	30-043
	Blank Orifice #73	50-343
	Embers	50-491
	On/Off Remote Control Kit	50-559
	Programmable Wall Mounted Remote Control	50-583
7	Dual Bulb Door Gasket (10 feet)	50-634
7	Door, Glass, & Gasket	50-911
8	Door Latch Mechanism with Spring (set of 2)	50-912
9	Pan Burner with Right & Left Firebox Cover	50-913
10	Burner Tray Complete	50-915
11	Grate	50-916
12	Log Set with Embers	50-917
13	Wall Switch Kit	50-920
	Conversion Kit from NG to LP	50-924
14	Three Flame Pilot Hood	50-925
15	Brick Panels (set of 3)	50-926
16	Louvre Set - Brushed Antique Copper (set of 2)	50-951
16	Louvre Set - Brushed Nickel (set of 2)	50-952
16	Louvre Set - Gold (set of 2)	50-953
17	Louvre Set - Black (set of 5 with mounting brackets)	50-956
18	Fan Kit	50-1035
	Conversion Kit from NG to LP	50-1036
19	VF36 Owner’s Manual	50-1037

Parts Diagram

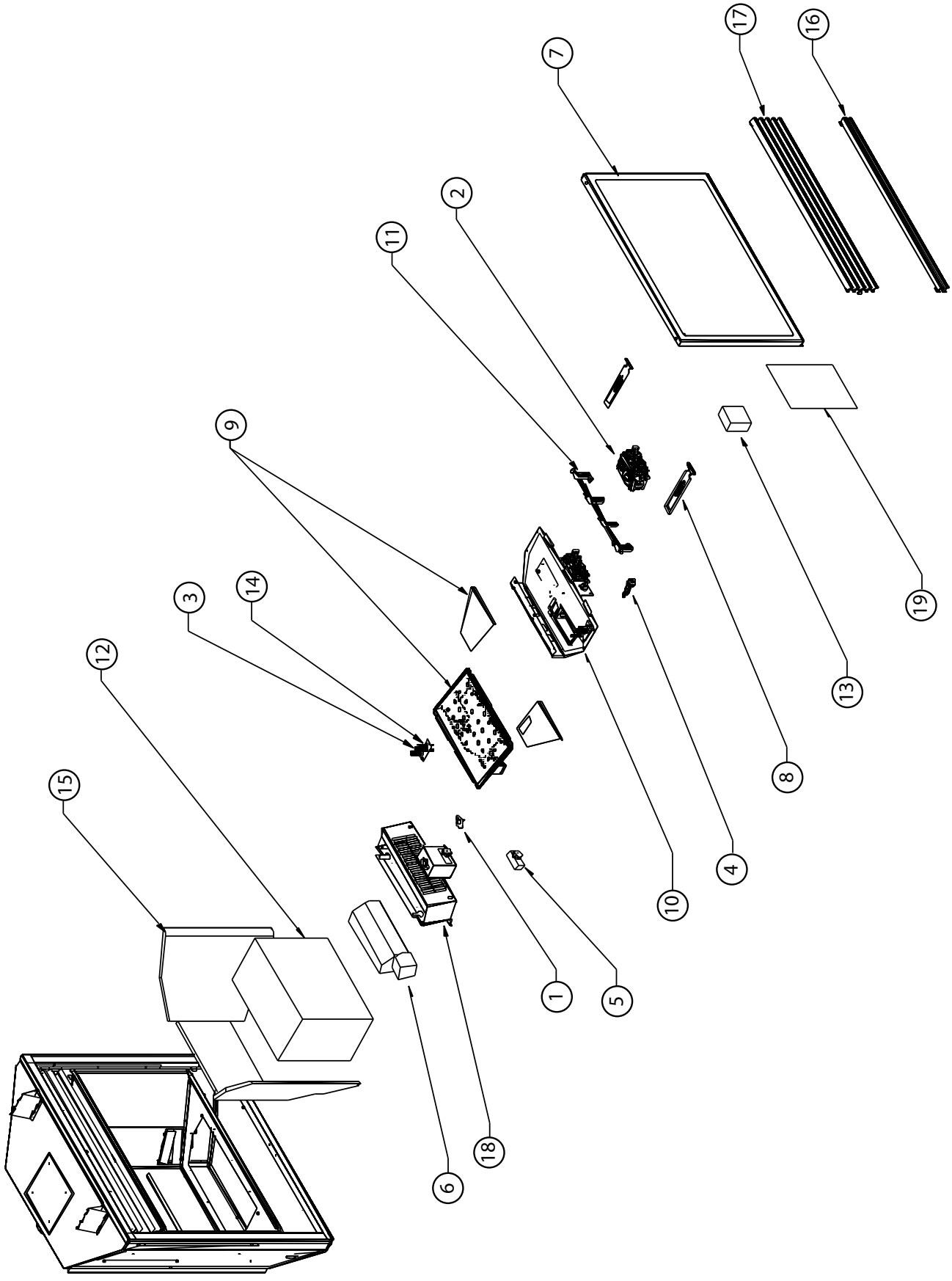

Warranty

Sherwood Industries Ltd. offers a Limited Lifetime Warranty on this gas product. This Limited Lifetime Warranty covers the appliance for a period of seven years from the date of installation. This warranty applies only to the original owner in the original location.

Covered under the lifetime warranty are the chassis and the heat exchanger. These steel components are covered against manufacturer's defects for seven years and the labour for the first year. The following exclusions apply: over-firing due to incorrect setup or tampering, damage caused by incorrect installation, usage or abuse. The unit must be properly installed by a qualified technician or installer, and must meet all local and national gas and building code requirements.

Under the Limited Lifetime Warranty, the following components are also covered: log set, burners and glass. The following exclusions apply:

Plated Finish: Damage caused by scratching, marring, chemicals, fingerprints, abrasive cleaners or discoloration with age. Items with Antique Copper that have had a green discoloration of the finish. If discoloration occurs, please follow the cleaning instructions as outlined in the "Maintenance And Service" section.

Glass: Damage caused by the use of harsh or abrasive cleaners, striking the glass, surface contaminants

Log Set: Damage caused by incorrect handling or misuse

Burners: Damage caused by improper or continuous operation under incorrect conditions

Sherwood Industries Ltd. offers a two-year warranty against manufacturing defects on all the electrical components and gas components, paint is also covered against flaking. This offer includes parts and labour for one year, and parts only thereafter.

Your dealer shall make all claims under this warranty in writing. **When filing a warranty claim please complete the following information on an official warranty claim form:**

TO THE DEALER:

Name, address and telephone number of purchaser and date of purchase, date of installation, name of installer and dealer, nature of complaint, defects or malfunction, description and part number of any parts replaced.

TO THE DISTRIBUTOR:

Sign and verify that work and information are correct.

This warranty covers defects in materials and workmanship only if the product has been installed according to the manual's instructions. If the product is damaged or broken as a result of misuse or mishandling, the warranty does not apply. The warranty does not cover removal and reinstallation costs.

Sherwood Industries Ltd. reserves the right to repair or replace the defective product. The shipping costs are to be paid by the consumer. All warranties by the manufacturer are set forth and no claim shall be made against the manufacturer on any oral warranty or representation.

Sherwood Industries Ltd. and its' employees or representatives will not assume any damages, either directly or indirectly, caused by improper usage, operation installation, servicing or maintenance of this appliance.

Sherwood Industries Ltd. reserves the right to make changes without notice. Please complete and mail the warranty registration card and have the installer fill in the installation data sheet in the back of the manual for warranty and future reference.

Installation Data Sheet

The following information must be recorded by the installer for warranty purposes and future reference.

NAME OF OWNER:

_____

ADDRESS:

_____

_____

_____

PHONE:_____

NAME OF DEALER:

_____

ADDRESS:

_____

_____

_____

PHONE:_____

MODEL:_____

SERIAL NUMBER:_____

DATE OF PURCHASE: _____ (dd/mm/yyyy)

DATE OF INSTALLATION:_____(dd/mm/yyyy)

☐ NATURAL GAS (NAT) ☐ PROPANE(LPG)

INLET GAS PRESSURE:_____in wc

MAIN BURNER ORIFICE:_____# DMS

PILOT ORIFICE #_____OR_____in diam.

INSTALLER'S SIGNATURE:

_____

NAME OF INSTALLER:

_____

ADDRESS:

_____

_____

_____

PHONE:_____

MANUFACTURED BY:
SHERWOOD INDUSTRIES LTD.
6782 OLDFIELD RD. SAANICHTON, BC, CANADA V8M 2A3
January 3, 2005
C-10797