SHERWOOD INDUSTRIES IS AN ENVIRONMENTALLY RESPONSIBLE COMPANY. THIS MANUAL IS PRINTED ON RECYCLED PAPER.

PLEASE KEEP THESE INSTRUCTIONS FOR FUTURE REFERENCE

Enviro

PELLET STOVE

EF4

Freestanding and Fireplace Insert

OWNER'S MANUAL





Contact your building or fire officials about restrictions and installation inspection requirements in your area.

PLEASE READ THIS ENTIRE MANUAL BEFORE INSTALLATION AND USE OF THIS PELLET BURNING ROOM HEATER. FAILURE TO FOLLOW THESE INSTRUCTIONS COULD RESULT IN PROPERTY DAMAGE, BODILY INJURY, OR EVEN DEATH.

EF4i-118

Table of Contents

Introduction....3
- Pellet Quality....3
- Rating Label Location....3
- Important Safety Data....4
- Safety Warnings And Recommendations....4

Operating Instructions....6
- Automatic Safety Features....6
- Slider/Damper Setting....6
- Operating Your Pellet Stove....7
- Turning Your Pellet Stove Off....7

Routine Cleaning and Maintenance....8

Installation....11
- Deciding Where to Locate your Pellet Appliance....11
- Removing Pellet Stove From Pallet....11
- Dimensions - Freestanding....12
- Dimensions - Fireplace Insert....12
- Clearances to Combustibles - Freestanding....13
- Clearances to Combustibles - Fireplace Insert....13
- Pedestal Installation - Freestanding....14
- Pedestal Installation - Fireplace Insert....14
- Vent Termination Requirements....15
- Outside Fresh-Air Connection....16
- Exhaust And Fresh Air Intake Locations....16
- Mobile Home Installation - Freestanding....17
- Corner Through Wall Installation - Freestanding....17
- Horizontal Exhaust Through Wall Installation - Freestanding....18
- Through Wall With Vertical Rise and Horizontal Termination Installation - Freestanding....19
- Inside Vertical Installations - Freestanding....20
- Outside Vertical Installations - Freestanding....20
- Hearth Mount Installation - Freestanding....21
- Masonry Fireplace Installation - Fireplace Insert....22
- Installation of Control Panel in The Insert Surround Panels....23
- Assembling The Insert Surround Panels....24
- Installation and Removal of Insert Surround Panels....24
- Installation of Door A....25

Troubleshooting....26

Wiring Diagram....30

Part List....31

Part List -Options....33

Part Diagram - Components....34

Part Diagram - Steel....35

Warranty....36

Installation Data Sheet....37

Introduction

Pellet Quality:

Pellet quality is important, please read the following:

Your enviro pellet stove has been designed to burn wood pellets only. Do not use any other type of fuel, as this will void any warranties stated in this manual.

The performance of your pellet stove is greatly affected by the type and quality of wood pellets being burned. As the heat output of various quality wood pellets differs, so will the performance and heat output of the pellet stove.

CAUTION: It is important to select and use only pellets that are dry and free of dirt or any impurities such as high salt content. Dirty fuel will adversely affect the operation and performance of the unit and will void the warranty. The Pellet Fuel Industries (P.F.I.) has established standards for wood pellet manufacturers. We recommend the use of pellets that meet or exceed these standards. Ask your dealer for a recommended pellet type.

P.F.I. PELLET STANDARDS:

Fines (fine particles).....1% maximum through a 1/8" screen
Bulk Density.....40 pound per cubic foot minimum
Size.....¼" to 5/16" diameter ½ – 1½" long maximum
Ash Content.....1% maximum (Premium grade)
.....3% maximum (Standard grade)
Moisture Content.....8% maximum
Heat Content.....approximately 8200 Btu per pound minimum

ASH: The ash content of the fuel and operation of your stove will directly determine the frequency of cleaning. The use of high ash fuels may result in the stove needing to be cleaned daily. A low ash fuel may allow longer intervals between cleaning.

CLINKERING: [clinkers are silica (sand) or other impurities in the fuel that will form a hard mass during the burning process]. This hard mass will block the air flow through the Burn Pot Liner and affect the performance of the stove. Any fuel, even approved types, may tend to clinker. Check the Burn-Pot Liner daily to ensure that the holes are not blocked with clinkers. If they become blocked, remove the liner (when the unit is cold) and clean/scrape the clinkers out. Clean the holes with a small pointed object if required. Refer to the section Routine Cleaning and Maintenance.

PELLET FEED RATES: Due to different fuel densities and sizes, pellet feed rates may vary. This may require an adjustment to the slider damper setting or to the auger feed trim setting on low.

Since Sherwood Industries Ltd. has no control over the quality of pellets that you use, we assume no liability for your choice in wood pellets.

Store pellets at least 36" (1 m) away from the pellet stove.

Rating Label Location:

Freestanding: The rating label is located on the inside of the hopper lid.
Insert: The rating label is located on the hopper cover.

Introduction

Important Safety Data:

Please read this entire Owner's Manual before installing or operating your ENVIRO Pellet Stove. Failure to follow these instructions may result in property damage, bodily injury or even death. Contact your local building or fire official to obtain a permit and any information on installation restrictions and inspection requirements for your area.

To prevent the possibility of a fire, ensure that the appliance is properly installed by adhering to the installation instructions. An ENVIRO dealer will be happy to assist you in obtaining information with regards to your local building codes and installation restrictions.

Be sure to maintain the structural integrity of the home when passing a vent through walls, ceilings, or roofs.

The stove's exhaust system works with negative combustion chamber pressure and a slightly positive chimney pressure. It is very important to ensure that the exhaust system be sealed and airtight. The ash pan and viewing door must be locked securely for proper and safe operation of the pellet stove.

Do not burn with insufficient combustion air. A periodic check is recommended to ensure proper combustion air is admitted to the combustion chamber. Setting the proper combustion air is achieved by adjusting the slider damper located on the left side of the stove.

When installing the stove in a mobile home, it must be electrically grounded to the steel chassis of the home and bolted to the floor. Make sure that the structural integrity of the home is maintained and all construction meets local building codes.

Minor soot or creosote may accumulate when the stove is operated under incorrect conditions such as an extremely rich burn (black tipped, lazy orange flames).

If you have any questions with regard to your stove or the above-mentioned information, please feel free to contact your local dealer for further clarification and comments.

Safety Warnings And Recommendations:

Caution: Do not connect to any air distribution duct or system.
Do not burn garbage or flammable fluids such as gasoline, naptha or engine oil.
Unit hot while in operation. Keep children, clothing and furniture away. Contact may cause skin burns.

FUEL: This pellet stove is designed and approved to only burn wood pellet fuel with up to 3% ash content. Dirty fuel will adversely affect the operation and performance of the unit and may void the warranty. Check with your dealer for fuel recommendations.

THE USE OF CORDWOOD IS PROHIBITED BY LAW.

SOOT: Operation of the stove with insufficient combustion air will result in the formation of soot which will collect on the glass, the heat exchanger, the exhaust vent system, and may stain the outside of the house. This is a dangerous situation and is inefficient. Frequently check your stove and adjust the slider/damper as needed to ensure proper combustion. **See: "Slider/Damper Setting".**

CLEANING: There will be some build up of fly ash and small amounts of creosote in the exhaust. This will vary due to the ash content of the fuel used and the operation of the stove. It is advisable to inspect and clean the exhaust vent semi-annually or every two tons of pellets.

Introduction

ASHES: Disposed ashes should be placed in a metal container with a tight fitting lid. The closed container of ashes should be on a non-combustible floor on the ground, well away from all combustible materials pending final disposal. If the ashes are disposed of by burial in soil or otherwise locally dispensed, they should be retained in the closed container until all cinders have been thoroughly cooled.

ELECTRICAL: The use of a surge protected power bar is recommended. The unit must be grounded. The grounded electrical cord should be connected to a standard 115 volts (4.5 Amps), 60 hertz electrical outlet. Be careful that the electrical cord is not trapped under the appliance and that it is clear of any hot surfaces or sharp edges and also must be accessible. If this power cord should become damaged, a replacement power cord must be purchased from the manufacture or a qualified ENVIRO dealer. The EF4's maximum power requirement is 520 watts.

GLASS: Do not abuse the glass by striking or slamming the door. Do not attempt to operate the stove with broken glass. The stove uses ceramic glass. Replacement glass must be purchased from an ENVIRO dealer. Do not attempt to open the door and clean the glass while the unit is in operation or if glass is hot. To clean the glass, use a soft cotton cloth and mild window cleaner, gas or wood stove glass cleaner, or take a damp paper towel and dip into the fly ash. This is a very mild abrasive and will not damage the glass.

FLAMMABLE LIQUIDS: Never use gasoline, gasoline-type lantern fuel, kerosene, charcoal lighter fluid, or similar liquids to start or "freshen up" a fire in the heater. Keep all such liquids well away from the heater while it is in use.

SMOKE DETECTOR: Smoke detectors should be installed and maintained in the structure when installing and operating a pellet burning appliance.

OPERATION: The ash pan and door must be closed securely for proper and safe operation of the pellet stove. Also ensure all gaskets on the door are checked and replaced when necessary.

KEEP ASH PAN FREE OF RAW FUEL.

DO NOT PLACE UNBURNED OR NEW PELLET FUEL IN ASH PAN. A fire in the ash pan may occur.

INSTALLATION: Be sure to maintain the structural integrity of your home when passing a vent through walls, ceilings, or roofs. It is recommended that the unit be secured into its position in order to avoid any displacement.
DO NOT INSTALL A FLUE DAMPER IN THE EXHAUST VENTING SYSTEM OF THIS UNIT.
DO NOT CONNECT THIS UNIT TO A CHIMNEY FLUE SERVING ANOTHER APPLIANCE.

FRESH AIR: Outside Fresh Air connection is optional. Must be connected to all units installed in Mobile and "Air Tight Homes" (R2000) or where required by local codes. Consider all large air moving devices when installing your unit and provide room air accordingly. Limited air for combustion may result in poor performance, smoking and other side effects of poor combustion.

If you have any questions with regards to your stove or the above-mentioned information, please feel free to contact your local dealer for further clarification and comments.

SINCE SHERWOOD INDUSTRIES LTD. HAS NO CONTROL OVER THE INSTALLATION OF YOUR STOVE, SHERWOOD INDUSTRIES LTD. GRANTS NO WARRANTY IMPLIED OR STATED FOR THE INSTALLATION OR MAINTENANCE OF YOUR STOVE. THEREFORE, SHERWOOD INDUSTRIES LTD. ASSUMES NO RESPONSIBILITY FOR ANY CONSEQUENTIAL DAMAGE(S).

SAVE THIS INSTRUCTION MANUAL FOR FUTURE REFERENCE

Operating Instructions

Automatic Safety Features:

Your pellet Stove has the following safety features:

A. The stove will shut off when the fire goes out and the exhaust temperature drops below 120°F (49°C).

B. The stove has a high temperature safety switch. If the temperature on the hopper reaches 200°F (93°C), the auger will automatically stop and the stove will shut down when the exhaust temperature cools. If this happens, call your local dealer to reset the 200°F (93°C) high limit switch. **ALSO FIND THE REASONS WHY THE UNIT OVERHEATED.**

C. The unit has a convection fan control over-ride. This function causes the convection fan to reach its full speed when the temperature at the back of the firebox reaches 160°F (71°C). This is a normal safety feature of your unit. To compensate for the fan cycling action that may occur, turn up the blower control proportionately to the heat output.

D. If the power goes out, the unit will stop running. When the power comes back on, the stove will not restart unless the exhaust temperature is still above 120°F (49°C).

Slider/Damper Setting:

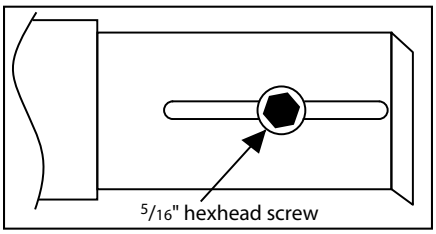

Figure 1: Slider Damper.

This is used to regulate the airflow through the pellet stove.

The slider damper is pre-set from the factory; it is set and held in place with a $^{5}/_{16}$" hex screw. This setting does not mean it should not be re-adjusted for fuel quality.

The slider damper is located behind the left side panel. To open the left side panel, undo the one screw located in the upper front corner of the cabinet side

SPECIAL NOTES:

Pellet quality is a major factor in how the pellet stove will operate. If the pellets have a high moisture content or ash content the fire will be less efficient and has a higher possibility of the fire building up and creating clinkers (hard ash build-up).

If the fire should happen to go out and the Dial-A-Fire has been set on the lowest setting, the Slider Damper should be pushed in slightly, decreasing the air in the firebox or the Dial-A-Fire and Auger Trim can be turned up slightly.

If, after long periods of burning, the fire builds up and overflows the burn pot or there is a build up of clinkers, this would be a sign that the pellet quality is poor, this requires more primary air, the slider damper must be pulled out to compensate. Pulling the slider damper out gives the fire more air.

The easiest way to make sure that an efficient flame is achieved is to understand the characteristics of the fire.

- A tall, lazy flame with dark orange tips, requires more air – Open slider (pull out) slightly.
- A short, brisk flame, like a blowtorch, has too much air – Close slider (push in) slightly.
- If the flame is in the middle of these two characteristics with a bright yellow/orange, active flame with no black tips then the air is set for proper operation.

Taking a reading of vacuum pressure inside the firebox with a magnehelic gauge can be used to set the slider for best combustion. **The best settings are a reading of 0.11 to 0.12 inches of water column on the high fire setting. Some fuels may require higher or lower settings.**

Operating Instructions

Operating Your Pellet Stove:

1. Check and fill hopper with pellets.
2. Make sure unit is plugged into a working outlet.
3. Switch the power "ON" by pushing the start-up switch once only.
4. Turn knob "B" to the 12 o'clock position. **(Lower grade pellets may need a higher setting on the feed rate). NOTES:** It will take longer to light if the hopper has been completely emptied or is the first fire up. The flashing green light corresponds to the auger feed rate.
5. Wait until the fire is established, then turn knob "B" to the desired heat output. The stove may not be able to burn in the BLUE ZONE if poor quality wood pellets are being used. Adjust the slider-damper to the appropriate setting (see "Slider/Damper Setting" section).
6. If the stove should shut off after fifteen (15) minutes and there is still a fire in the firebox – press the start up switch once more. If the fire went out, return to Step 2 and re-light the stove.

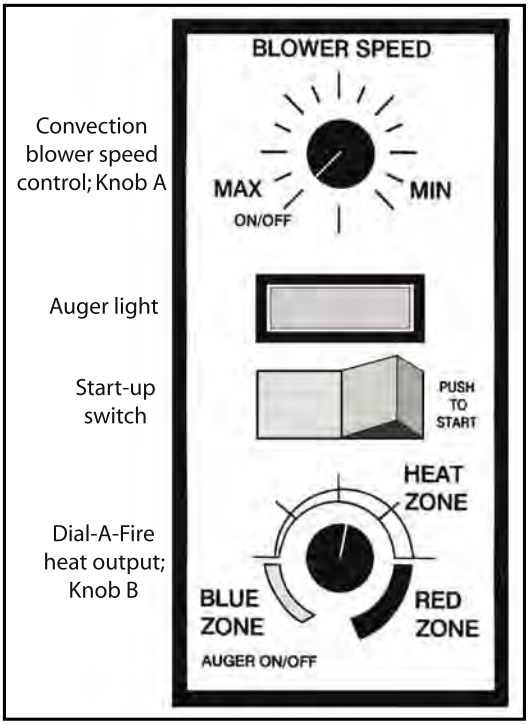

Figure 2: Dial-A-Fire control panel.

KNOB "A": Fan Controller. By adjusting the knob you will vary the rate of airflow into the room by varying the speed of the convection blower. When you first start the stove, it should be placed in the "OFF" position in order to heat the unit as quickly as possible. Once the room has come up to temperature, the control may be set to a comfortable level. ***Note:** The convection blower may cycle to high automatically depending on the setting of knobs "A" and "B". This is a normal safety feature of the unit.

KNOB "B": Dial a Fire Heat Output Knob. This knob controls the amount of heat output. The dial has a scale with the **blue zone** representing the coolest setting of the stove, and the **red zone** representing the hottest setting. **Note:** The scale on the Dial A Fire knob represents a range, not exact times. Wood pellets of differing quality may affect the performance of the stove. If the stove has trouble operating at the ends of its' range, turn the heat output knob back slightly.

Turning Your Pellet Stove Off:

To turn your stove off, simply turn the HEAT OUTPUT knob ("Knob B") counter-clockwise until the knob clicks to the "OFF" position. This will stop the feed of pellets. The blowers will continue to run and cool the stove. When cool enough, the stove will shut down.

DO NOT unplug unit while combustion fan is operating. This may lead to smoke escaping from the stove.

Routine Cleaning and Maintenance

NOTE: Do not use abrasive cleaners to clean the surface or any part of the stove.

The following should be inspected periodically to ensure that the appliance is operating at its optimum and giving you excellent heat value:

2-3 Days / Weekly	Bi-Annually or 2 Tons of Fuel
Burn Pot and Liner	Exhaust Vent
Ash Pan	Fresh air Intake Tube
Inside Firebox	Blower Mechanisms
Door Glass	Heat exchanger tubes
Heat exchanger tubes	Behind firebox liners
Ash pan & Door gaskets	All Hinges
Door Latch	Post Season Clean-up

TOOLS REQUIRED TO CLEAN UNIT

- Torx T-20 Screwdriver
- $^{5}/_{16}$" Wrench or Socket
- Brush
- Soft Cloth
- Vacuum with fine filter bag

The following list of components should be inspected and maintained routinely to ensure that the appliance is operating at its optimum and giving you excellent heat value:

BURN POT AND LINER (2-3 days)

This is the 'pot' where the pellets are burned. The burn pot and liner should be inspected every two to three days, to ensure proper air flow through the liner**. Failure to keep the liner clean may cause a build up of fuel past the burn pot liner and up the drop tube. This will cause the auger to jam and may result in pellets burning in the drop tube and hopper**.

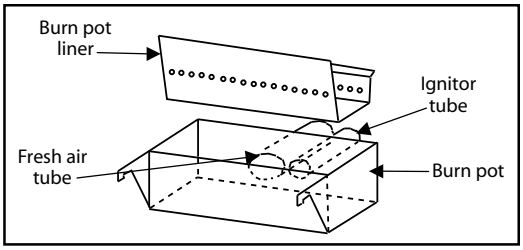

Figure 3: Burn pot with liner.

Ensure the unit is cold before cleaning. To remove the burn pot and burn pot liner, open the door using the door handle provided, located on the left-hand side of the stove. Swing the door open. Lift the liner from the burn pot. Lift the burn pot from the firebox by gently lifting the front of the burn pot up first, then sliding the assembly from the air intake tube and the ignitor cartridge. Using a metal scraper, remove material that has accumulated or is clogging the liner's holes. Then dispose of the scrapped ashes from the liner and from inside the burn pot. Place the burn pot back into the stove, making sure that the pipes are properly inserted into the burn pot and the front tabs are placed in the firebox. Place the liner back into the burn-pot making sure that the ignitor hole in the liner is aligned with the ignitor tube. Push the liner up against the ignitor tube.

- If, after long periods of burning, the fire continually builds up and overflows the burn pot or there is a build up of clinkers, this is an indication that the pellet fuel quality is poor or the stove may need cleaning. Check the stove for ash build up (clean if required) and adjust the slider / damper to produce the proper clean combustion.

EXHAUST PASSAGES (2-3 days)

For bi-weekly clean out, ash may be removed from behind the steel plates by rotating the circular covers located behind the right and left side panels (see Figure 4). To open the side panels undo one (1) T-20 screw on each side (top front). When the side cabinet doors have been opened, there are two (2) round disks at the bottom of the firebox. Loosen, but do not remove, the screw on the disks and open, this will allow vacuuming behind the firebox liner's plates.

Routine Cleaning and Maintenance

ASH PAN AND DOOR GASKETS (weekly)

After excessive use the gasket may come loose. To repair this, glue the gasket on, using high-temperature fiberglass gasket glue available from your local ENVIRO dealer. This is important to maintain an airtight assembly.

ASH PAN (weekly)

Monitor the ash level every week. Remember that different pellet fuels will have different ash contents. Ash content is a good indication of fuel efficiency and quality. Refer to "Warnings and Recommendations" for disposal of ashes. **DO NOT PLACE UNBURNED OR RAW PELLET FUEL IN ASH PAN.**

INSERT ASH REMOVAL:

The EF4 pellet stove insert does not have an ash pan and the ashes must be vacuumed out of the firebox on a daily basis. CAUTION: BECAUSE THE FLY ASH IS VERY FINE, THE USE OF A VACUUM BAG WILL BE REQUIRED TO PREVENT ASH FROM BEING BLOWN BACK INTO THE ROOM. Please pay special attention that there are no hot ashes in the firebox or there could be a possibility of a fire hazard inside the vacuum cleaner. Place all hot ashes into a non-combustible container.

FREESTANDING ASH PAN:

This part is located under the burner, in the pedestal, and has a latching mechanism to secure it. To remove the ash pan, unlock the latch on the pedestal cover and then pull the pan out. Dump the ashes into a metal container stored away from combustibles. Monitor the ash level every week.

HEAT EXCHANGER TUBES (weekly)

A handle is located under the hopper lid, in the center of the stove just above the door, pointed out in Figure 4. This handle is to be pulled up and down a few times **(ONLY WHEN THE UNIT IS COLD)** in order to clean away any fly ash that may have collected on the heat exchanger tubes. As different types of pellets produce different amounts of ash, cleaning of the tubes should be done on a regular basis to enable the unit to run efficiently.

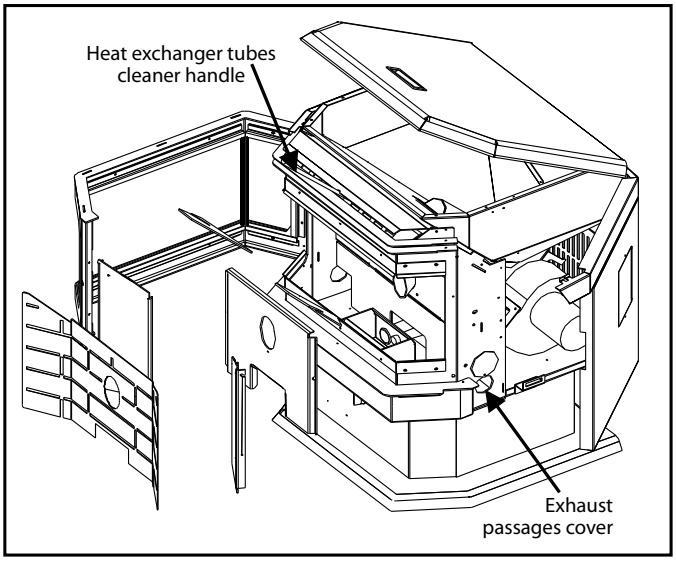

Figure 4: EF4 opened.

FRESH AIR INTAKE (season)

Inspect periodically to be sure that it is not clogged with any foreign materials.

Removal of the firebox backing for bi-annual cleaning:

- Open the door by using the handle provided.
- Remove the burn pot and burn pot liner.
- Lubricate all screws with penetrating oil.
- Undo the four (4) screws and remove the firebrick liner.
- Remove the two (2) top baffles (take note of their position).
- Just above the ash sill there are two (2) screws that hold the firebox liners in place, remove these two (2) screws.
- With the tip of a flat screwdriver, gently lift up the side panels and remove the side panels.
- Pull the center panel out.
- Vacuum and clean thoroughly.

Routine Cleaning and Maintenance

Installation of firebox backing:

- Insert center panel.
- Place the side panels in the firebox and re-install the two (2) lower screws. Install top baffles.
- Replace the firebrick liner.
- Replace the burn pot and burn pot liner.
- Close the glass door and secure.

EXHAUST VENT (season)

The products of combustion will contain small particles of flyash. The flyash will collect in the exhaust venting system and restrict the flow of the flue gases. Incomplete combustion, such as occurs during startup, shutdown, or incorrect operation of the room heater will lead to some soot formation which will collect in the exhaust venting system. The exhaust venting system should be inspected at least once every year or after two tons of pellets to determine if cleaning is necessary. We recommend contacting your dealer for professional cleaning. To remove dust from the vent pipe, tap lightly on the pipe to dislodge any loose ash. Open the bottom of the "T" to dump the ash, then vacuum as much of the ash out of the vent pipe as possible.

BLOWER MECHANISMS (season)

Unplug the stove then open the right/left side panels to access the two blowers. Vacuum all dust from the motors. Only the convection blower motor (on the right side of the stove) will require lubrication. The convection motor has two lubrication holes on it. Use two drops of SAE 20 light oil to lubricate every six months. Excess oil may damage the motor. The exhaust blower's motor has sealed bearings, DO NOT lubricate this motor.

DOOR GLASS (**It is recommended that your dealer replace the glass if broken.)**

The door glass is a high temperature PYROCERAMIC. To replace the glass, unscrew and remove the four glass retainers. Remove the glass and any broken pieces. High temperature fiberglass tape should be used around the glass. Replace the glass, center the glass assembly in the frame, then screw the glass retainers back to the frame. The use of substitute materials is prohibited; use only part EF4i-062.

POST SEASON CLEAN-UP

Once you are finished using the pellet appliance for the season, unplug the stove for added electrical protection. It is very important that the stove be cleaned and serviced as stated above.

CLEANING PLATED SURFACES

Please clean all fingerprints off of all plated parts, with denatured alcohol on a soft cloth, before firing the unit each time. Fingerprints, etc. can become permanently etched into the gold if not removed before operating the pellet heater.

Installation

Deciding Where to Locate your Pellet Appliance:

1. Check clearances to combustibles.
2. Do not obtain combustion air from an attic, garage or any unventilated space. Combustion air may be obtained from a ventilated crawlspace.
3. Do not install the stove in a bedroom.
4. You can vent the stove through an exterior wall behind the unit or connect it to an existing masonry or metal chimney (must be lined if the chimney is over 6" (15 cm) diameter, or over 28 inches² (180 cm²) cross sectional area). An interior vent can be used with approved pipe passing through the ceiling and roof.
5. Locate the stove in a large and open room that is centrally located in the house. This will optimize heat circulation.
6. The power cord is 8 feet (2.43 m) long and may require a grounded extension cord to reach the nearest electrical outlet.

NATIONAL FIREPLACE INSTITUTE
NFI
CERTIFIED
www.nficertified.org

We recommend that our pellet hearth products be installed and serviced by professionals who are certified in the U.S. by the National Fireplace Institute® (NFI) as NFI Pellet Specialists or who are certified in Canada by Wood Energy Technical Training (WETT).

Wood Energy Technical Training
www.wettinc.ca

Removing Pellet Stove From Pallet:

To remove your new stove from its pallet, open the left and right side panels. There are two (2) wood screws that are holding the bottom of the stove to the pallet. Remove the screws. Close the side panels. See "Pedestal Installation - Freestanding" or "Pedestal Installation - Insert" to install the pedestal.

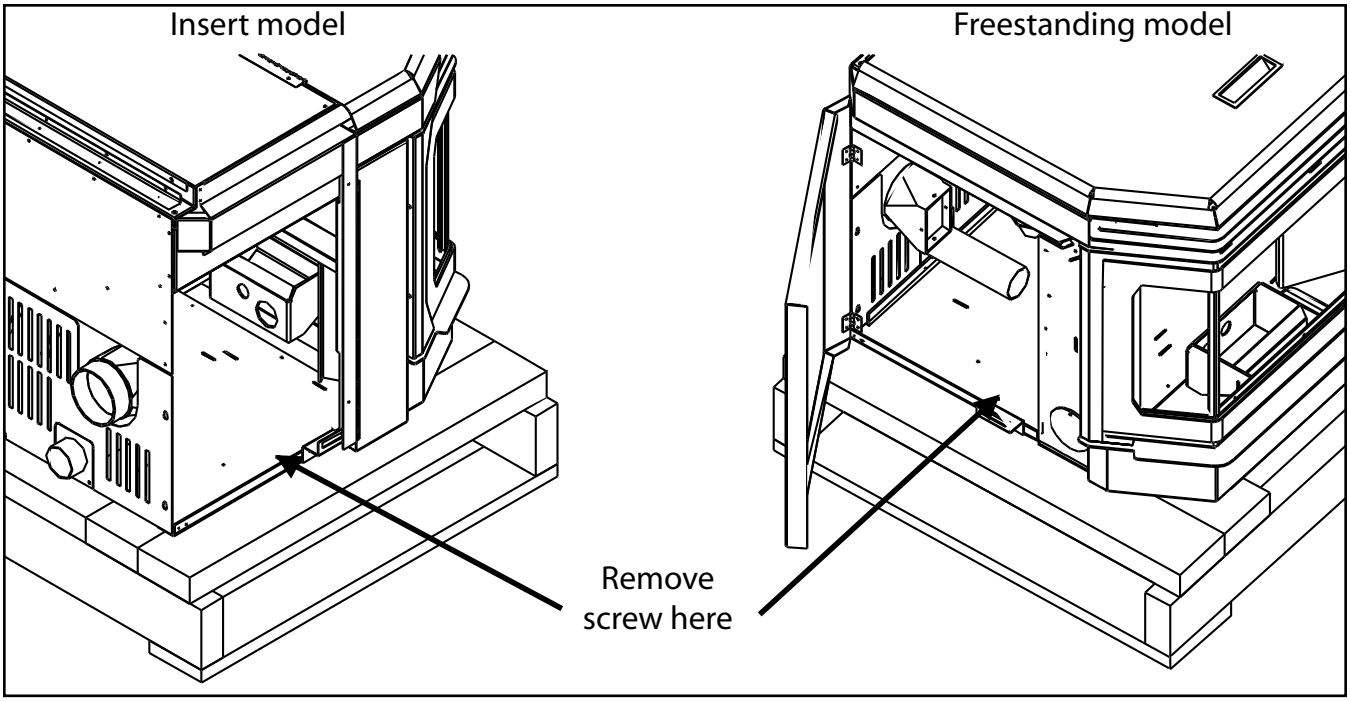

Figure 1: Screws to take out to remove stove from pallet.

Dimensions - Freestanding:

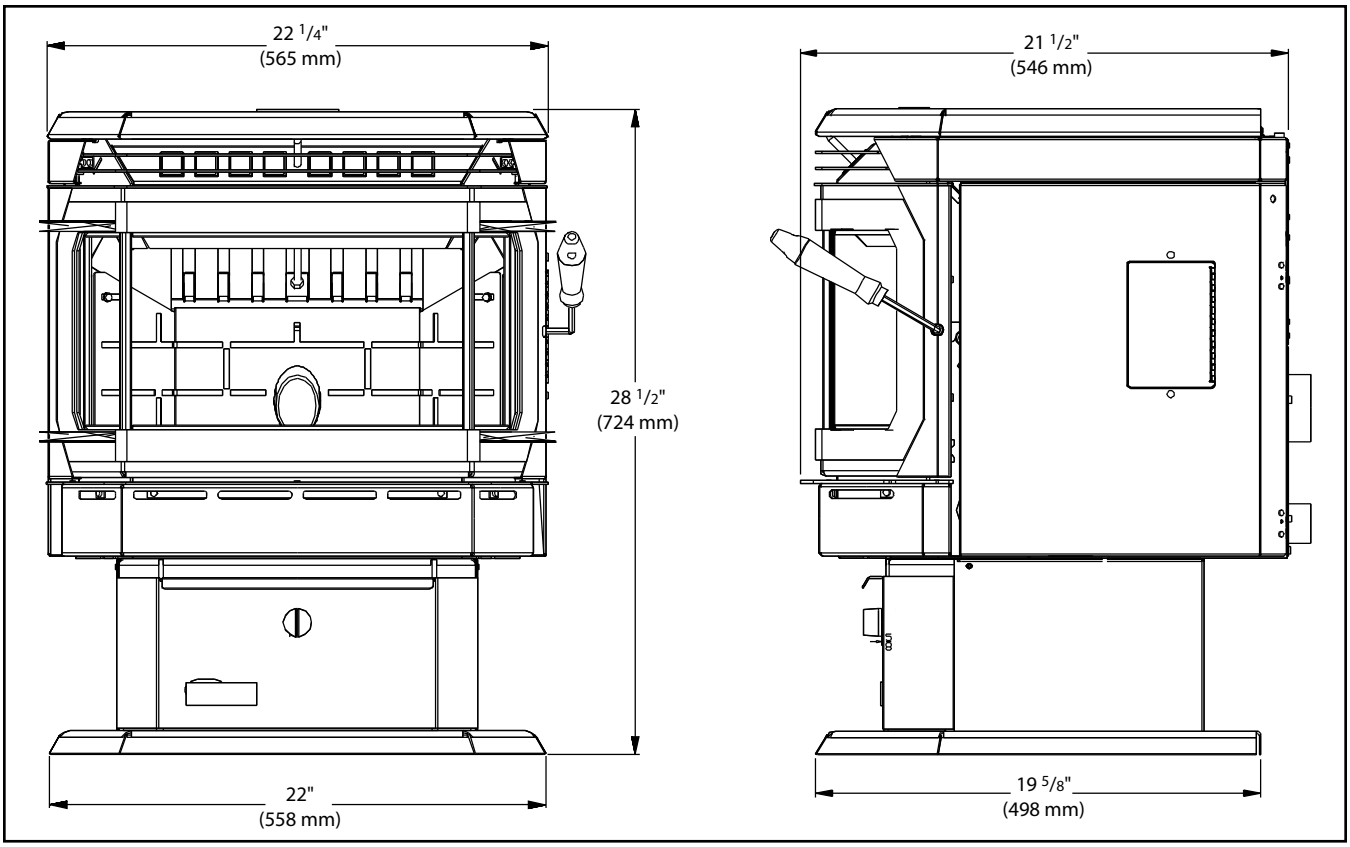

Figure 6: Dimensions of EF4 Freestanding.

Dimensions - Fireplace Insert:

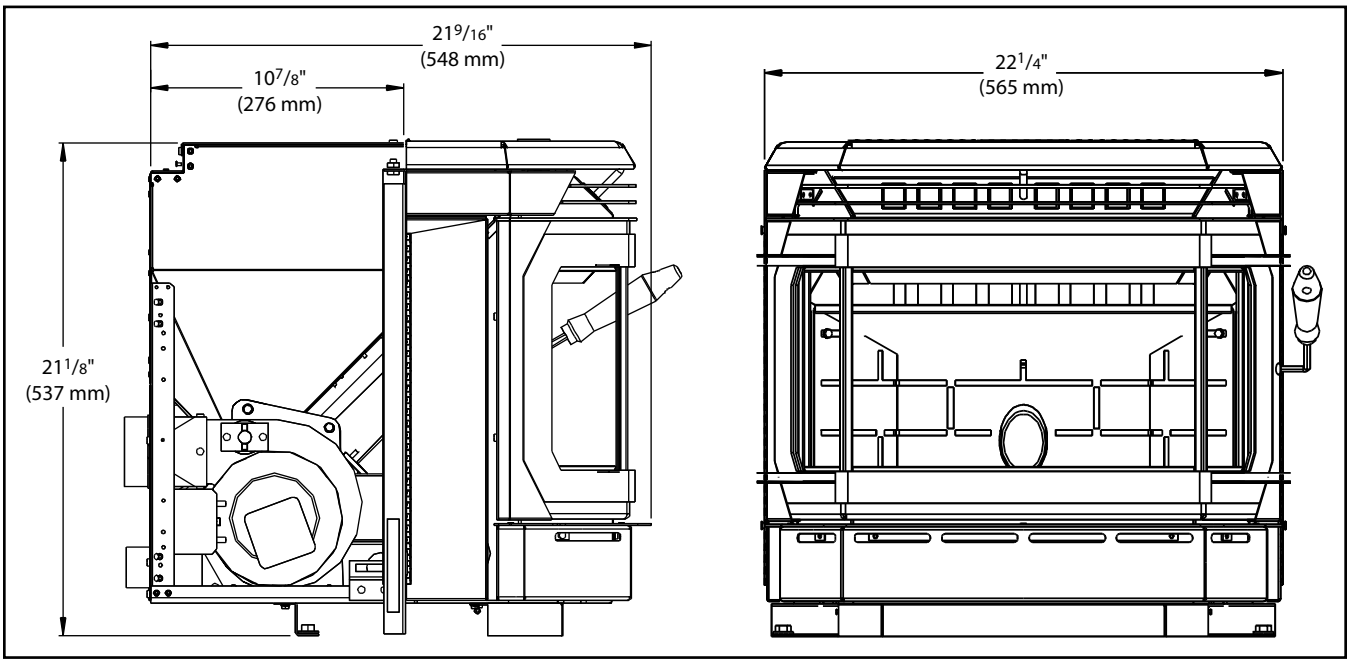

Figure 7: Dimensions of EF4 Fireplace Insert.

Installation

Clearances to Combustibles - Freestanding:

When installing this unit on a combustible floor (eg. wood linoleum) a non-combustible hearth pad must be under the unit. The pad must extend at least the width of the appliance [22" (558 mm)] and at least the depth of the appliance plus 6" (150 mm) in front of the appliance [27 ½" (699 mm)].

Side wall to unit	- 6 inches	(15 cm)
Back wall to unit	- 2 inches	(5 cm)
Corner to unit	- 2 inches	(5 cm)
Door front to edge of floor protection		
	- 6 inches	(15 cm)

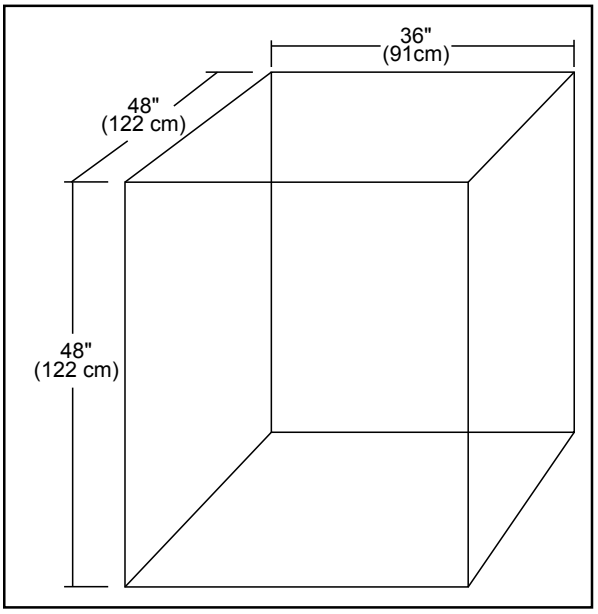

Figure 9: EF4 Freestanding Minimum Alcove Size.

These dimensions are minimum clearances but it is recommended that you ensure sufficient room for servicing, routine cleaning and maintenance.

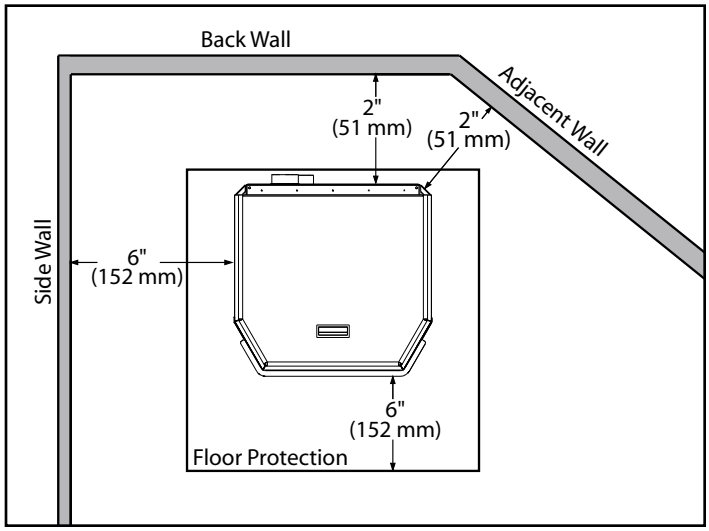

Figure 8: EF4 Freestanding Clearance to Combustibles.

Minimum Alcove width	- 36 inches	(91 cm)
Minimum Alcove height	- 48 inches	(122 cm)
Maximum Alcove depth	- 48 inches	(122 cm)

Clearances to Combustibles - Fireplace Insert:

Side wall to unit	- 9 inches	(22.9 cm)
Mantel projection	- 10 inches	(25.4 cm)
Mantel to top of unit	- 8 inches	(20.3 cm)
Facing on masonry fireplace edge		
	- 9 inches	(22.9 cm)

Minimum solid fuel burning fireplace opening:

Height	- 21⅛"	(53.7 cm)
Width	- 22"	(58.9 cm)
Depth	- 21½"	(54.6 cm)

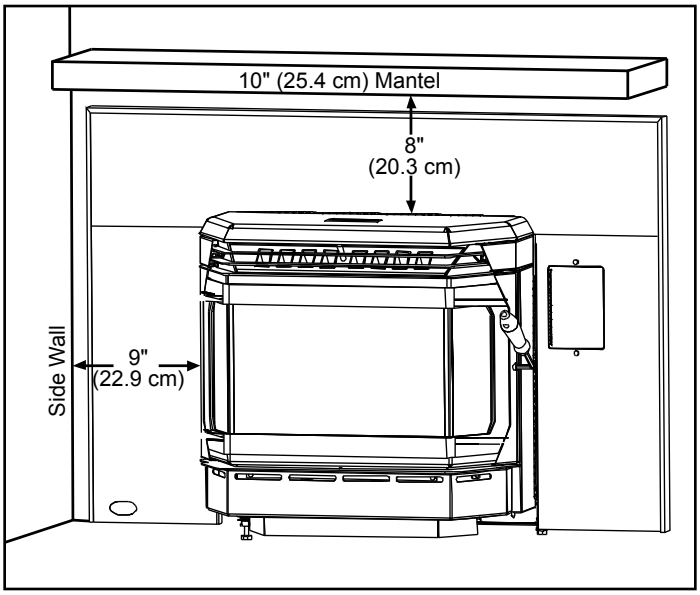

Figure 10: EF4 Fireplace Insert Clearance to Combustibles.

Installation

Pedestal Installation - Freestanding:

The freestanding model comes with a pedestal that has to be attached prior to installation:

- Remove the pedestal from the box
- Remove the unit from the box
- Place the unit on its back on the pallet.
- Back the four (4) screws in the base off three (3) to four (4) full turns.
- Align the keyholes in the pedestal with the screws, lock into place.
- Secure the two (2) pieces by tightening the four (4) screws from the inside of the pedestal.

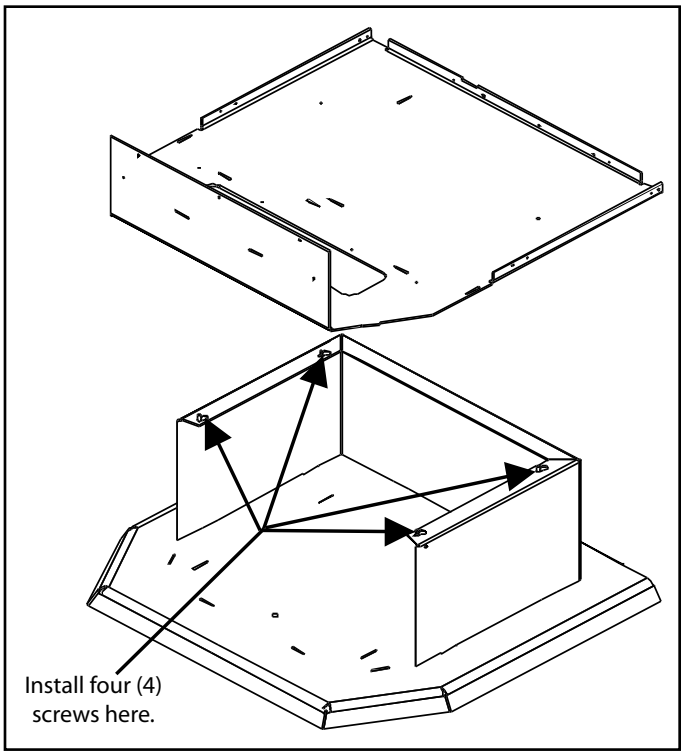

Figure 11: Freestanding Pedestal.

Pedestal Installation - Fireplace Insert:

The pedestal for the fireplace insert is packaged in the hopper of the appliance. Secure the leveling (Z-style) bracket onto the back two (2) pedestal mounting screws with the inserted nuts facing up. Insert leveling legs into the nuts on the Z bracket if necessary.

Place the front portion of the pedestal into the front pedestal screws; there are two slots in the pedestal that fit over these screws. Finish securing the pedestal using the four (4) T-20 Torx screws provided. This will cover and seal the ash pan hole in the bottom of the firebox inside the appliance.

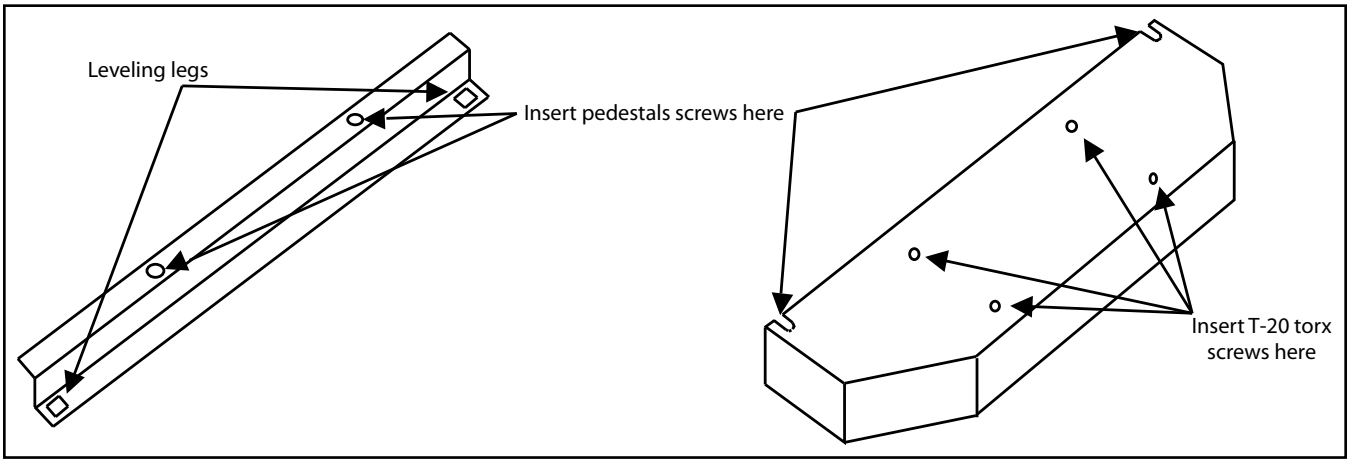

Figure 12: Fireplace Insert Pedestal and Leveling Legs.

Vent Termination Requirements:

IT IS RECOMMENDED THAT YOUR PELLET STOVE BE INSTALLED BY AN AUTHORIZED DEALER/INSTALLER.

Table 1: Use in conjunction with Figure 13 for allowable exterior vent termination locations.

Letter	Minimum Clearance	Description
A	24 in (61 cm)	Above grass, top of plants, wood, or any other combustible materials.
B	48 in (122 cm)	From beside/below any door or window that may be opened.
C	24 in (61 cm)	From above any door or window that may be opened.
D	24 in (61 cm)	To any adjacent building, fences and protruding parts of the structure.
E	24 in (61 cm)	Below any eave or roof overhang
F	12 in (30 cm)	To outside corner.
G	12 in (30 cm)	To inside corner, combustible wall (vertical and horizontal terminations).
H	3 ft (91 cm) within a height of 15 ft (4.5 m) above the meter/regulator assembly	To each side of center line extended above natural gas or propane meter/regulator assembly or mechanical vent.
I	3 ft (91 cm)	From any forced air intake of other appliance
J	12 in (30 cm)	Clearance to non-mechanical air supply inlet to building, or the combustion air inlet to any appliance.
K	24 in (61 cm)	Clearance above roof line for vertical terminations.
L	7 ft (2.13 m)	Clearance above paved sidewalk or paved driveway located on public property.

1. Do not terminate the vent in any enclosed or semi-enclosed areas such as a carport, garage, attic, crawlspace, narrow walkway, closely fenced area, under a sundeck or porch, or any location that can build up a concentration of fumes such as stairwells, covered breezeway, etc.

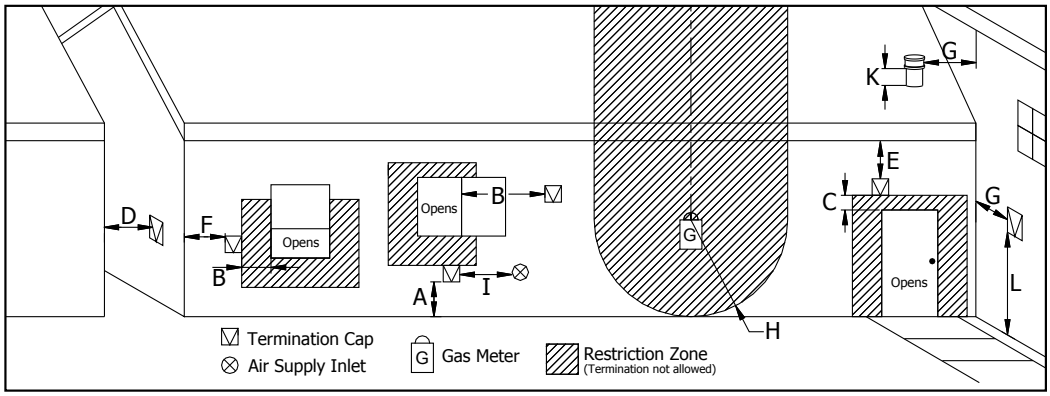

Figure 13: Use in conjunction with Table 1 for allowable exterior vent termination locations.

2. Vent surfaces can become hot enough to cause burns if touched by children. Non-combustible shielding or guards may be required.

3. Termination must exhaust above the inlet elevation. It is recommended that at least five feet of vertical pipe be installed outside when the appliance is vented directly through a wall, to create some natural draft to prevent the possibility of smoke or odor during appliance shut down or power failure. This will keep exhaust from causing a nuisance or hazard from exposing people or shrubs to high temperatures. In any case, the safest and preferred venting method is to extend the vent through the roof vertically.

4. Distance from the bottom of the termination and grade is 12" (30 cm) minimum. This is conditional upon the plants and nature of grade surface. The exhaust gases are hot enough to ignite grass, plants and shrubs located in the vicinity of termination. The grade surface must not be lawn.

5. If the unit is incorrectly vented or the air to fuel mixture is out of balance, a slight discoloration of the exterior of the house might occur. Since these factors are beyond the control of Sherwood Industries Ltd, we grant no guarantee against such incidents.

6. When installing an FPI the chimney must be fully lined. Unless the chimney's inside diameter is less than 6" (15 cm) around or has a cross section area of 28 inches² (180.6 cm²), we strongly recommend lining all masonry chimneys.

NOTE: Venting terminals shall not be recessed into walls or siding.

Outside Fresh-Air Connection:

Outside fresh air is mandatory when installing this unit in airtight homes and mobile homes.

When connecting to an outside fresh air source, do not use plastic or combustible pipe. Only 1⅝" minimum (42 mm) ID (inside diameter) steel, aluminum or copper pipe should be used. It is recommended, when you are installing a fresh air system, to keep the number of bends in the pipe to a minimum.

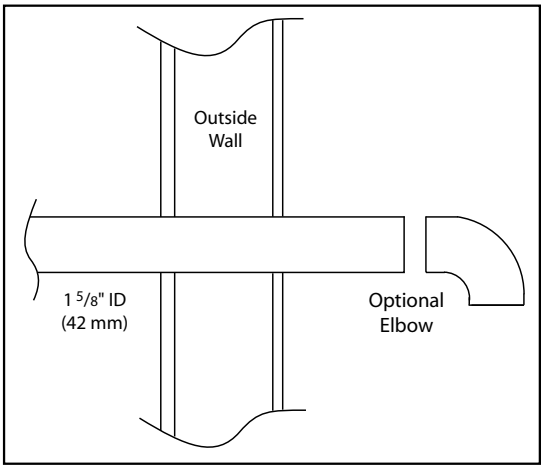

Figure 14: Outside Air Connection.

Exhaust And Fresh Air Intake Locations:

EXHAUST	**Freestanding**		**Insert**	
Base to center of flue	15 ¼"	(38.8 cm)	7 ⅞"	(20.0 cm)
Side to center of flue	5 ⅞"	(14.8 cm)	5 ¾"	(14.6 cm)
Center of unit to center of flue	5 3/16"	(13.2 cm)	5 3/16"	(13.2 cm)
FRESH AIR INTAKE.				
Base to center of intake	10 ⅛"	(25.9 cm)	2 15/16"	(7.4 cm)
Side to center of intake	8"	(20.2 cm)	8 1/16"	(20.5 cm)
Center of unit to center of flue	3 1/16"	(7.8 cm)	3 1/16"	(7.8 cm)

INSTALL VENT AT CLEARANCES SPECIFIED BY THE VENTING MANUFACTURER

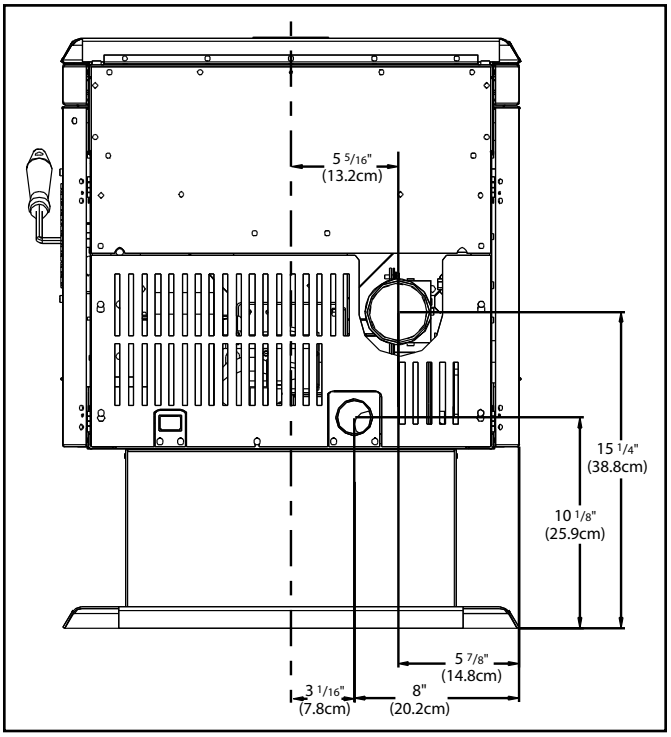

Figure 15: EF4 Freestanding Inlet and Outlet Location.

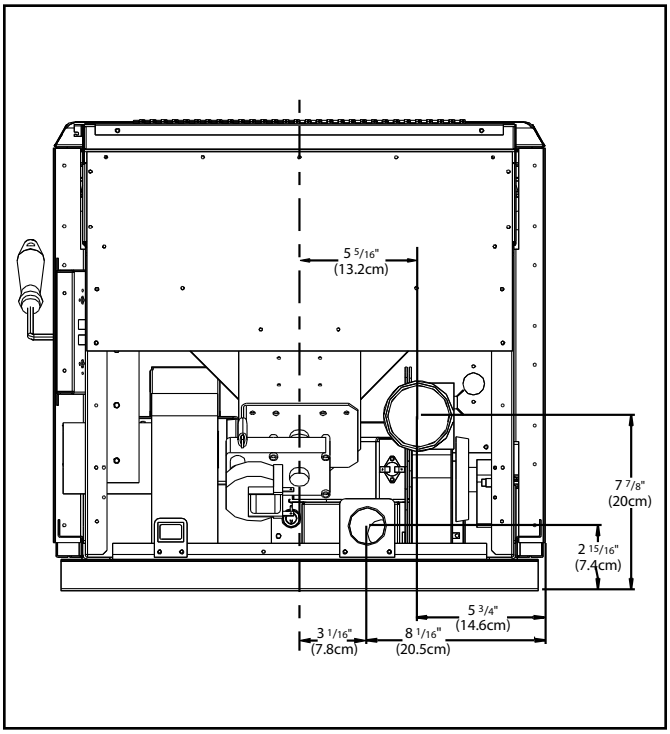

Figure 16: EF4 Fireplace Insert Inlet and Outlet Location.

MOBILE HOME INSTALLATION - FREESTANDING:

- Secure the heater to the floor using the two (2) holes in the pedestal.
- Ensure the unit is electrically grounded to the chassis of your home (permanently).
- Do not install in a room people sleep in.
- Outside fresh air is mandatory. Secure outside air connections directly to fresh air intake pipe and secure with three (3) screws evenly spaced.

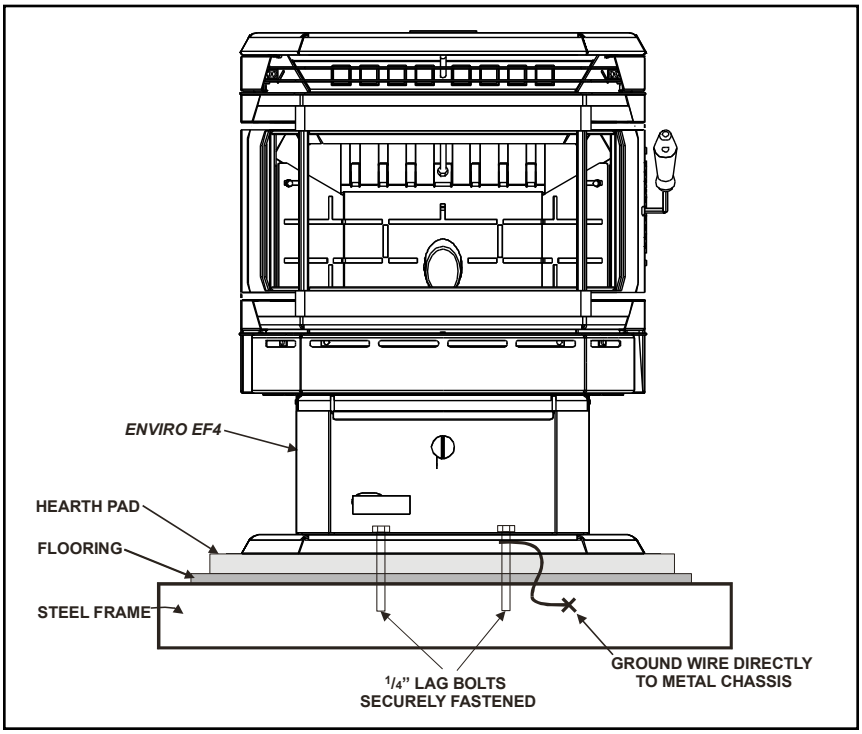

Figure 17: Mobile home installation.

CAUTION: THE STRUCTURAL INTEGRITY OF THE MANUFACTURED HOME FLOOR, WALL AND CEILING/ROOF MUST BE MAINTAINED.

CORNER THROUGH WALL INSTALLATION - FREESTANDING:

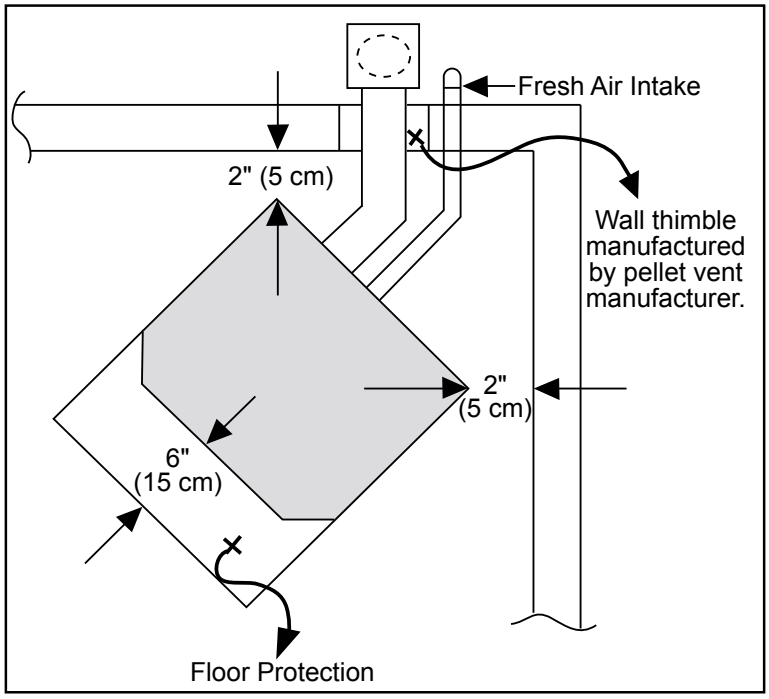

Figure 18: Corner Installation.

Horizontal Exhaust Through Wall Installation - Freestanding:

Vent installation: install vent at clearances specified by the vent manufacturer.
A chimney connector shall not pass through an attic or roof space, closet or similar concealed spaces, or a floor, or ceiling. Where passage through a wall or partition of combustible construction is desired, the installation shall conform to CAN/CSA-B365 Installation Code for Solid-Fuel-Burning Appliances and Equipment. Only use venting of L or PL type with an inside diameter of 3 or 4 inches (7.6 or 10.1 cm).

1. Choose a location for your stove that meets the requirements stated in this manual and allows installation with the least amount of interference to house framing, plumbing, wiring, etc.
2. Install a non-combustible hearth pad (where necessary).
3. Place the appliance 15" (37.5 cm) away from the wall. If the stove is to be set on a hearth pad, set the unit on it.
4. Locate the center of the exhaust pipe on the stove. Extend that line to the wall. Once you have located the center point on the wall, refer to pellet vent manufacturer installation instructions for correct hole size and clearance to combustibles.
5. Install the wall thimble as per the instructions written on the thimble. Maintain an effective vapour barrier in accordance with local building codes.
6. Install a length of 3" (76 mm) or 4" (101 mm) vent pipe into the wall thimble. The pipe should install easily into the thimble.
7. Install the fresh air intake (see Outside Fresh Air Connection).
8. Connect the exhaust vent pipe to the exhaust pipe on the stove. Seal the connection with high temperature silicone.
9. Push the stove straight back, leaving a minimum of 2" (5 cm) clearance from the back of the stove to the wall. Seal the vent pipe to the thimble with high temperature silicone.

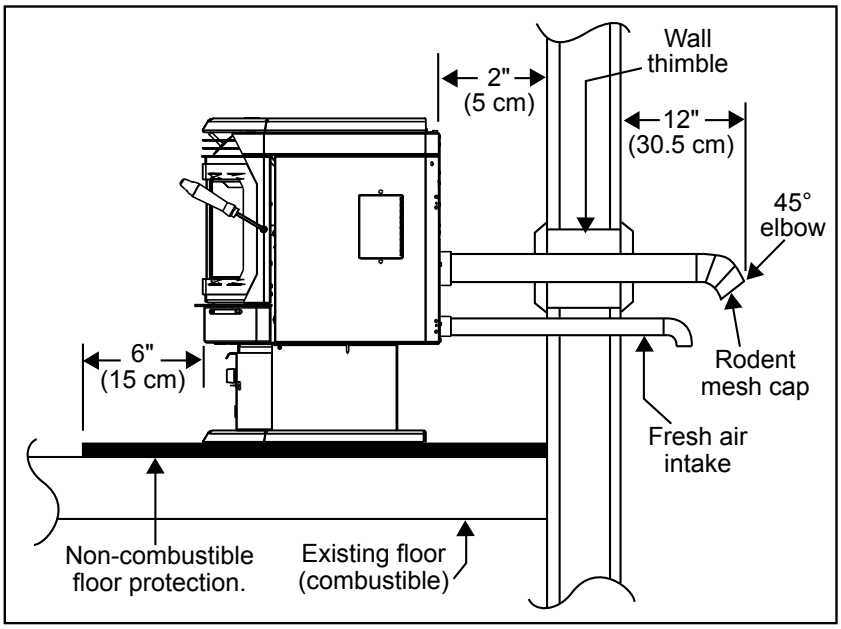

Figure 19: Straight through wall Installation.

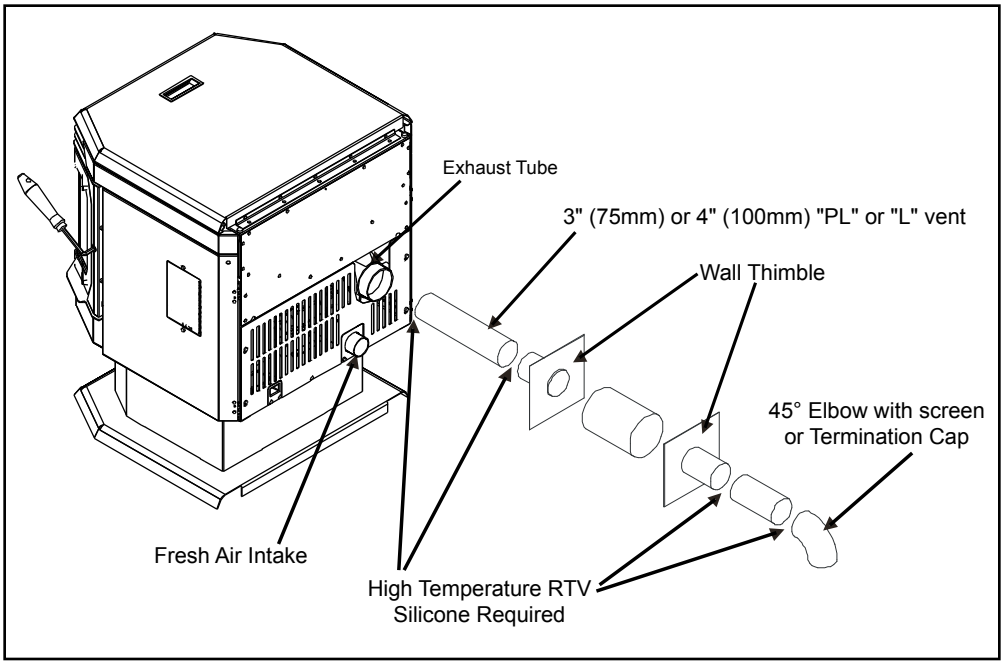

Figure 20: Venting to use with straight through wall Installation.

10. The pipe must extend at least 12" (30 cm) away from the building. If necessary, bring another length of pipe (PL type) to the outside of the home to connect to the first section. Do not forget to place high temperature silicone around the pipe that passes through the thimble.
11. Install a vertical pipe, or if all requirements for direct venting are met, install vent termination. The stainless steel cap termination manufactured by the vent manufacturer is recommended. However, when the vent terminates several feet above ground level and there are no trees, plants, etc. within several feet, a 45° elbow can be used as termination. The elbow must be turned down to prevent rain from entering.

NOTE:

- Some horizontal through wall installations may require a "T" and 3 to 5 feet (91 to 152 cm) of vertical pipe outside the building to help naturally draft in the unit.
- This may be required if a proper burn cannot be maintained, after the stove has been tested and the airflow set.
- This is due to the back pressure in the exhaust caused by airflow around the structure.
- All sections of pipe must have three (3) screws evenly spaced and all horizontal and vertical vent sections located within the house must have a bead of high temperature silicone installed on the male end of the pipe before installation to create a gas tight seal.

Through Wall With Vertical Rise and Horizontal Termination Installation - Freestanding:

A 45° elbow with a rodent screen may be used in place of the termination cap (or stainless steel termination hood).

Figure 21 is the recommended installation set up.

Figure 22 is the installation to use if there is a concrete or retaining wall in line with exhaust vent on a pellet stove. The termination must be 12" (30 cm) from the outside wall and 12" (30 cm) above the ground.

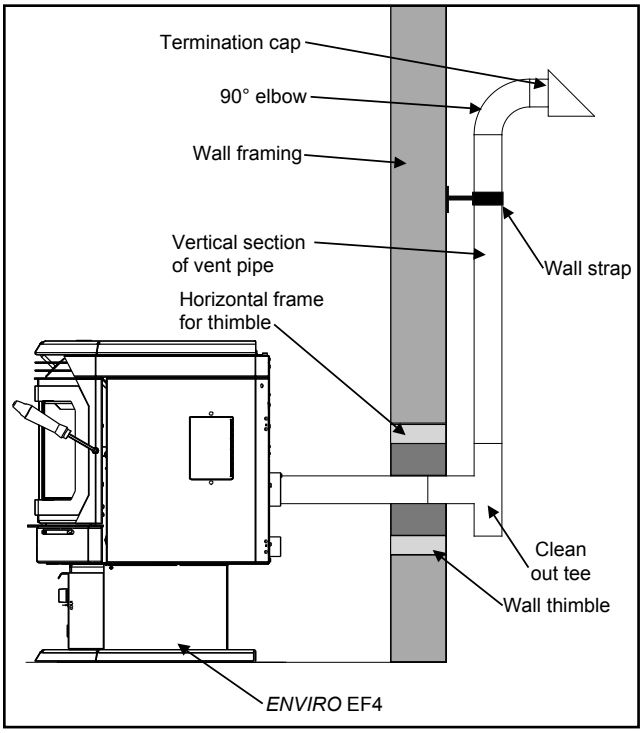

Figure 21: Venting horizontally with rise.

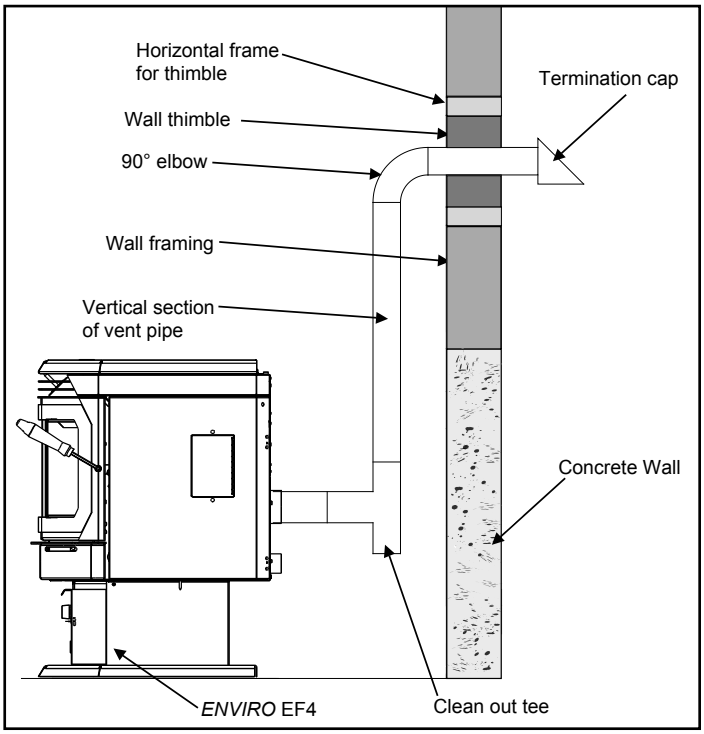

Figure 22: Venting with concrete wall behind unit .

Installation

Inside Vertical Installations - Freestanding:

1. Choose a stove location that is ideal. See the section "Deciding Where to Locate your Pellet Appliance."
2. Place a non-combustible hearth pad where necessary.
3. Place the unit on the hearth pad (if installed on a carpeted surface) and space the unit in a manner so when the pellet vent is installed vertically, it will be 3" (7.6 cm) away from a combustible wall.
4. Locate the center of the fresh air intake pipe on the unit. Match that center with the same point on the wall and cut a hole about 1 ⅝" (41 mm) in diameter.
5. Install the fresh air intake pipe.
6. Install the tee with clean out.
7. Install the pellet vent upward from there. When you reach the ceiling, make sure that the vent goes through the ceiling fire stop. Maintain a 3" (7.6 cm) distance to combustibles and keep attic insulation away from the vent pipe. Maintain an effective vapor barrier.
8. Finally, extend the pellet vent to go through the roof flashing.
9. Ensure that the rain cap is approximately 36" (915 mm) above the roof.

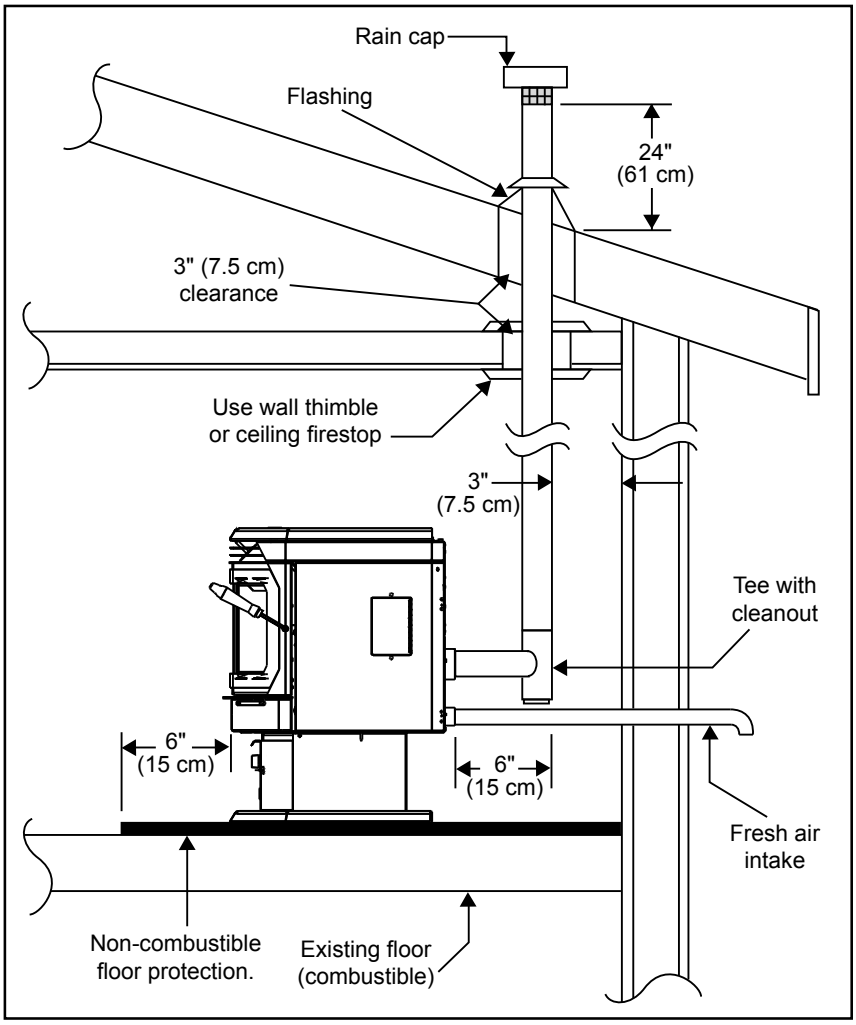

Figure 23: Inside Vertical Installation.

Outside Vertical Installations - Freestanding:

To accomplish a outside vertical pipe installation, follow steps 1 through 5 in the "Inside Vertical Installations - Freestanding" section and then finish it by performing the following (refer to Figure 24).

1. Install a tee with clean out on the outside of the house.
2. Install PL vent upward from the tee. Make sure that you install support brackets to keep the vent straight and secure.
3. Install ceiling thimble and secure the flashing as you go through the roof.
4. Ensure that the rain cap is approximately 36" (91.5 cm) above the roof.

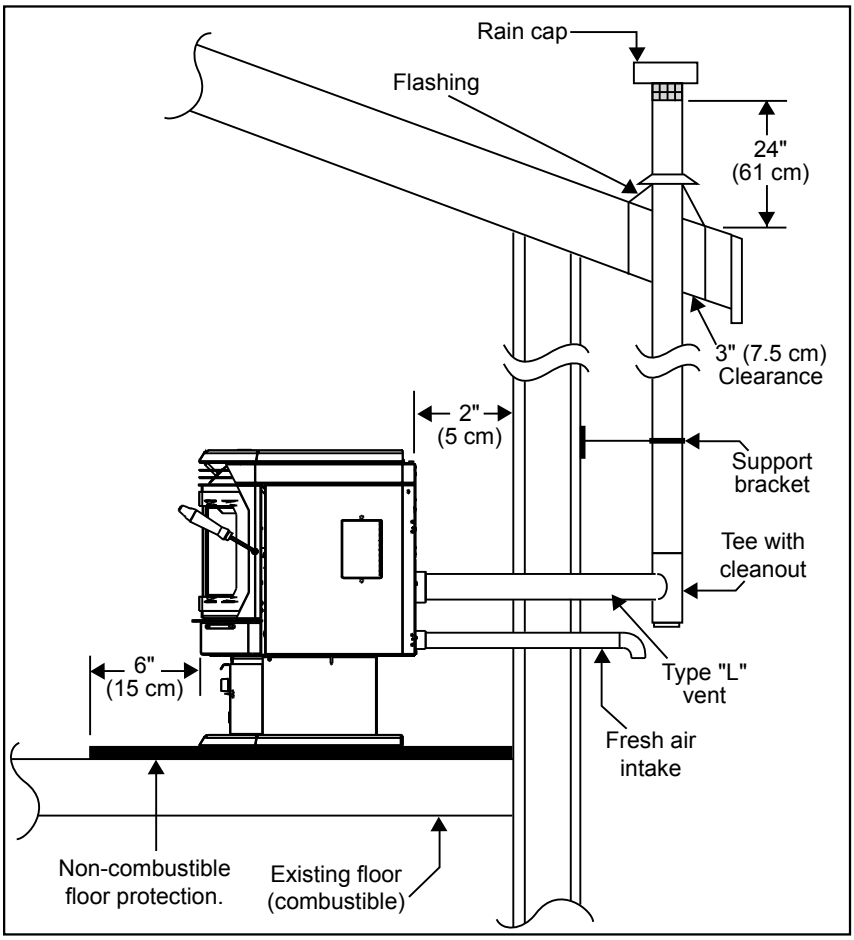

Figure 24: Outside Vertical Installation.

Hearth Mount Installation - Freestanding:

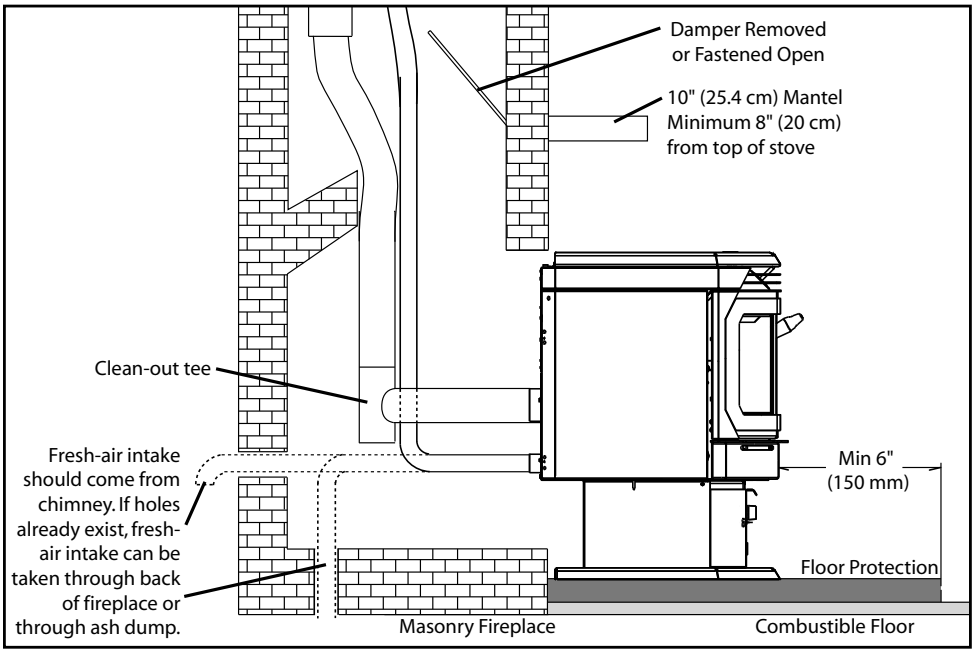

Figure 25: Freestanding hearth mount installation.

Refer to Figures 25 and 26.

1. Install the hearth pad.
2. Lock fireplace damper in the open position.
3. Install a positive flue connector at the fireplace dampers.
4. Connect a tee or a 90° elbow to the exhaust pipe.
5. Install flexible stainless steel liner or listed pellet vent to the top of the chimney.

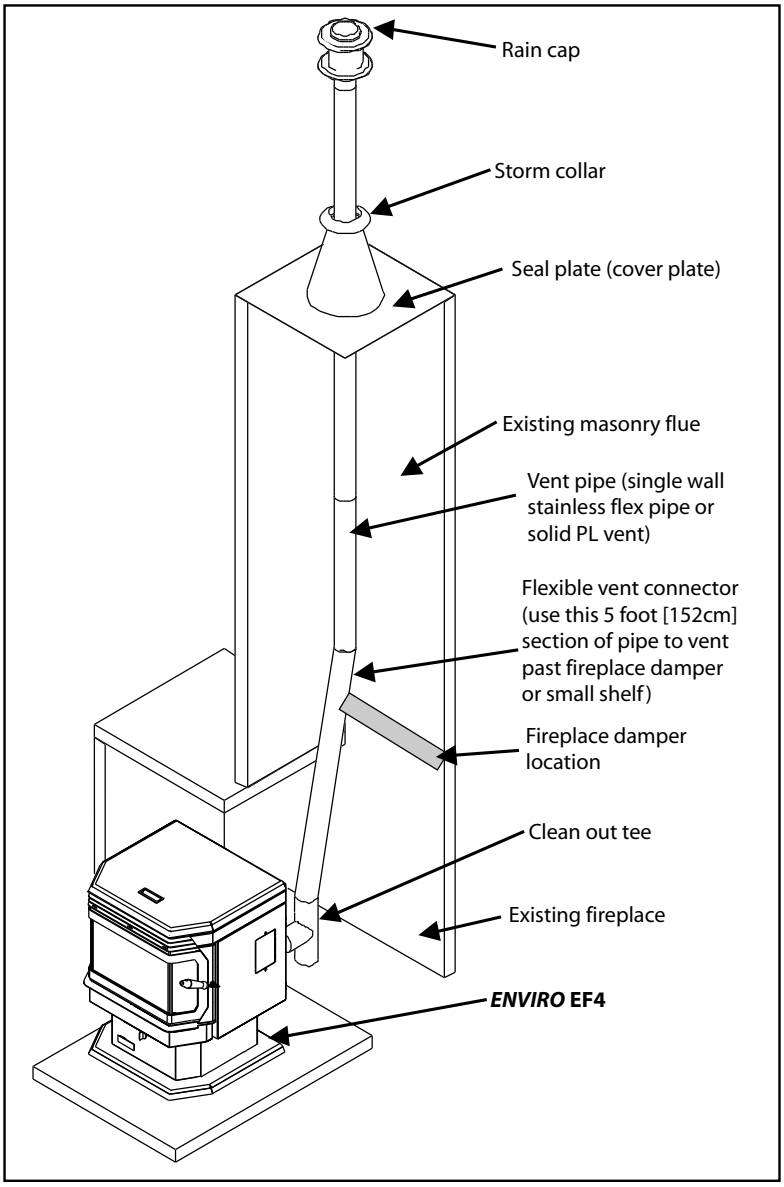

Figure 26: Freestanding hearth mount installation overview.

Masonry Fireplace Installation - Fireplace Insert:

The fireplace insert model requires a surround panel and a pedestal. When installing this unit, ensure that the pedestal is removed from the inside of the hopper and installed on the bottom of the unit (see "Pedestal Installation - Fireplace Insert").

Assemble surround panel (see "Assembling The Surround Panel - Fireplace Insert") before starting installation.

A non-combustible hearth pad must cover combustible flooring underneath, as well as 6" (150 mm) in front of the heater and 6" (150 mm) to the side of the heater.

1. Install the hearth pad.
2. Lock the fireplace damper in the open position.
3. Install a positive flue connector at the fireplace damper.

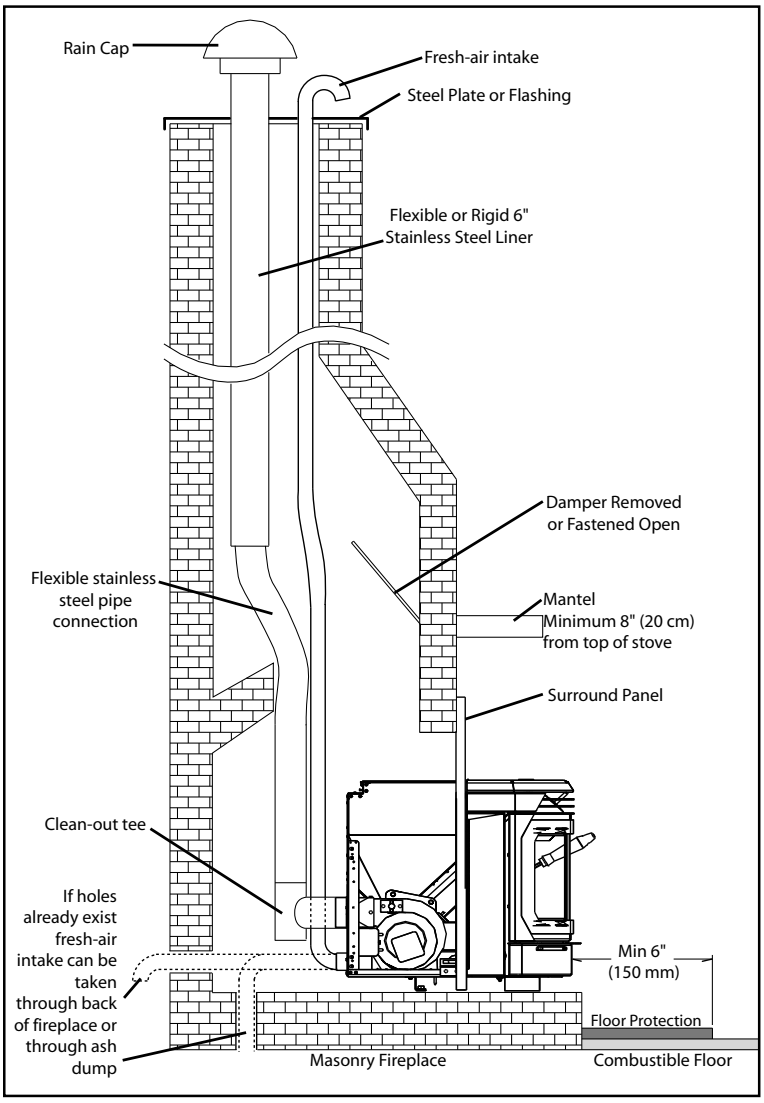

Figure 27: Masonry fireplace installation.

4. Connect a tee or 90° degree elbow to the exhaust pipe.
5. This fireplace insert must be installed with a continuous chimney liner of 3" or 4" diameter extending from the fireplace insert to the top of the chimney. The liner must conform to type 3 requirements of CAN/ULC S635.
6. (Recommended) Install fresh air intake either through the back of the fireplace or through the positive flue connector.

When installing the insert into a masonry fireplace, DO NOT remove any bricks or masonry, with the following exception: masonry or steel, including the damper plate, may be removed from the smoke shelf and adjacent damper frame, if necessary, to accommodate a chimney liner. Do this only if their removal will not weaken the structure of the fireplace and chimney, and will not reduce protection for combustible materials to less than that required by the national building code.

When installing the fireplace insert into a zero clearance fireplace, **DO NOT** cut or modify any factory firebox parts. If the fireplace insert does not fit into a zero clearance fireplace, we recommend you use an ENVIRO freestanding model and install as a hearth mounted unit. Install a 3" (76 mm) flex pipe from the stove to the top of the chimney (see "Hearth Mount Installation - Freestanding:").

Installation of Control Panel in The Insert Surround Panels:

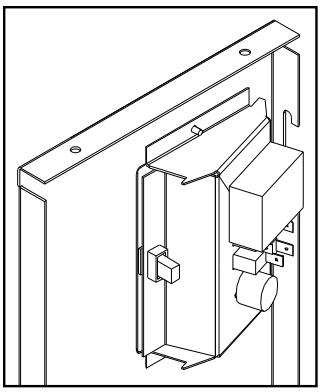

Figure 28: Control Panel Back.

When installing the control panel into the surround panel, the surround does not need to be assembled. The control board will be found in behind the firebox.

Place the control panel on the backside of the right surround panel so the hinge is on the outside and the top and bottom holes on the control panel line up with those on the surround. Attach using two (2) T-20 screws through the front of the surround into the circuit board control panel.

After the surround has been assembled and is ready to be installed on the unit, plug the wiring harness into the control panel (see Figure 28).

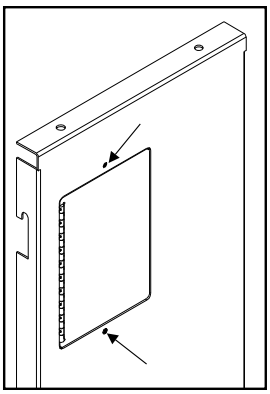

Figure 29: Control Panel Cover.

Assembling The Insert Surround Panels:

1. To assemble the surround panels, lay the panels face down on a soft flat surface and align the outer edges of the sides with the top panel. Bolt the sides to the top using two (2) ¼" nuts and bolts on each side (refer to Figure 30).
2. Assemble the trim using the corner hardware and screws supplied in the faceplate packaging. Install corner hardware into the side trim, then push into the top frame (refer to Figure 31).
3. Place the brass trim over the panel assembly.
4. Place the assembled surround panel around the stove; align the slots with the screw heads. Push back and then down to engage the surround slots on the mounting screws. Make sure the top surround panel sits flat on the stove.

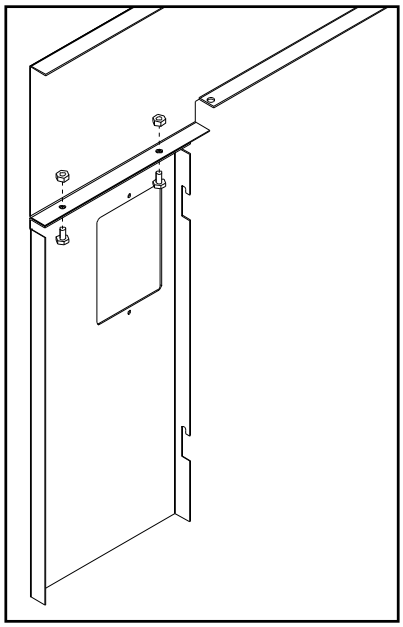

Figure 30: Assembling the Surround Panel, back view.

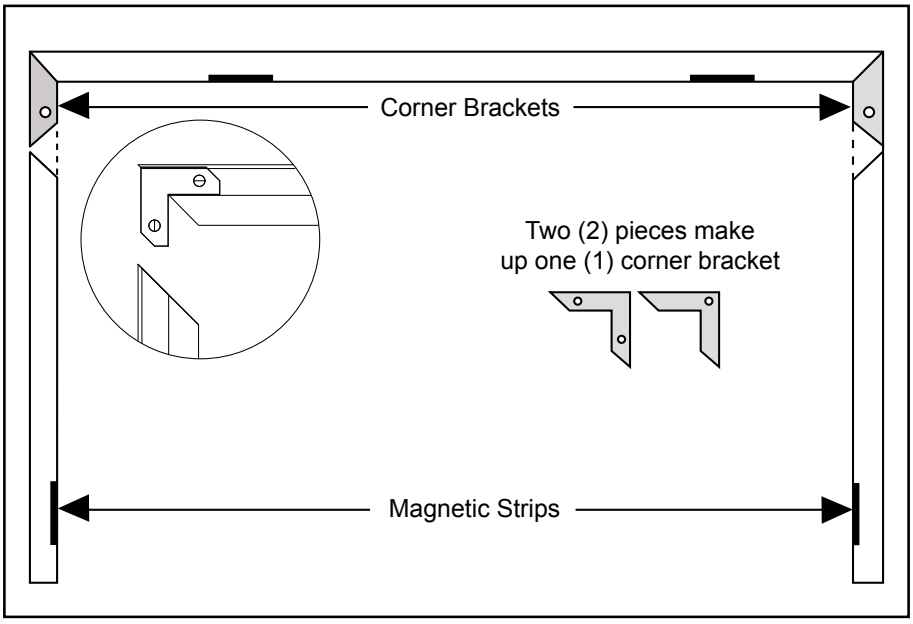

Figure 31: Assembling Trim for Surround Panel.

Installation and Removal of Insert Surround Panels:

Plug the wiring harness into the control panel (see Figure 28). Place the assembled surround panel around the stove; align the slots with the screw heads. Push surround in then down to engage the surround slots on the mounting screws (see Figure 32). Make sure the top surround panel sits flat behind the stove top.

REMOVAL:

When maintenance is required on the unit the surround must be removed. Pull the surround straight up till it stops then pull it out about 4" (10 cm) and rest the surround on top of the unit while the control panel is removed or disconnected.

If electrical connection is required for maintenance, remove the control board control panel from the surround.

If electrical connection is not required for maintenance, remove the wiring harness from the bottom of the control board control.

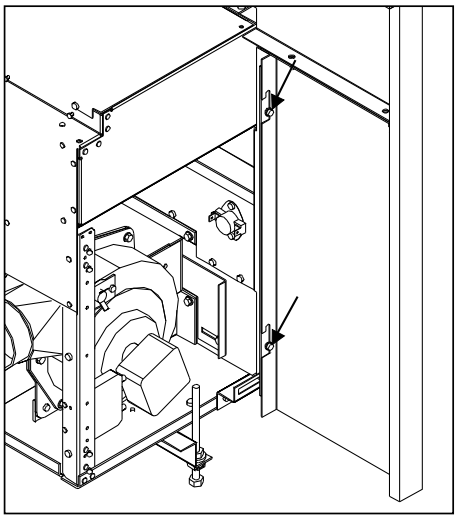

Figure 32: Panel placed on unit.

Installation of Door A:

WARNING: DO NOT install the EF4 plated door A when unit is hot or is in operation.

REMOVE PAINTED DOOR A:

Remove the door assembly by opening the door, use the Allen key with the wood handle that was provided with the stove (see Figure 33). Lift the door up over the hinge pins and out. Lay the door down on a soft surface.

Remove the two end covers using a T-20 screwdriver, each side has two screws (see Figure 34). Place end covers and screws to the side.

There are four screws, one in each corner, that hold the painted door in place (see Figure 35), remove the screws with a T-20 screwdriver and place the screws to the side. Discard the painted door A.

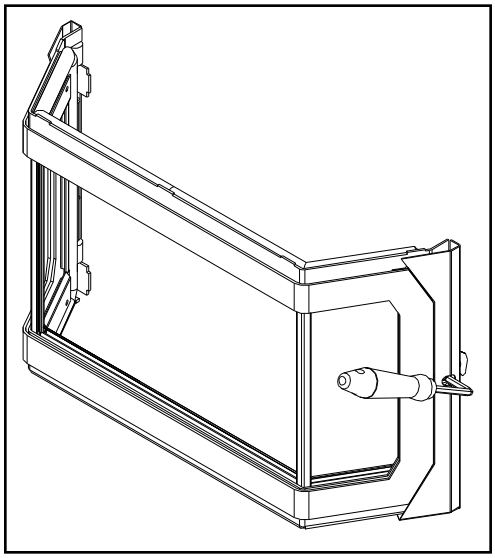

Figure 33: EF4 complete door.

INSTALL PLATED DOOR A:

Place the plated door (gold or nickel) in position and fasten with the four T-20 screws that were used on the painted door. Ensure the screws are tight.

Reinstall the two end covers with their two screws each. Tighten the screws.

Close the door assembly using the Allen key with the wood handle.

CLEANING THE PLATED DOOR A:

It is important to note that fingerprints and other marks can leave a permanent stain on plated finishes. To avoid this, give the face a quick wipe with denatured alcohol on a soft cloth BEFORE lighting the fireplace. Never clean the face when it is hot, let the stove completely cool off. Do not use other cleaners as they may leave a residue, which can become permanently etched into the surface.

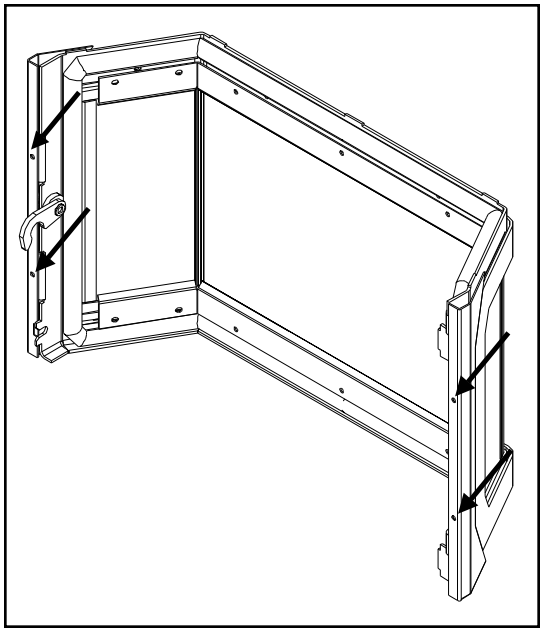

Figure 34: EF4 end screws.

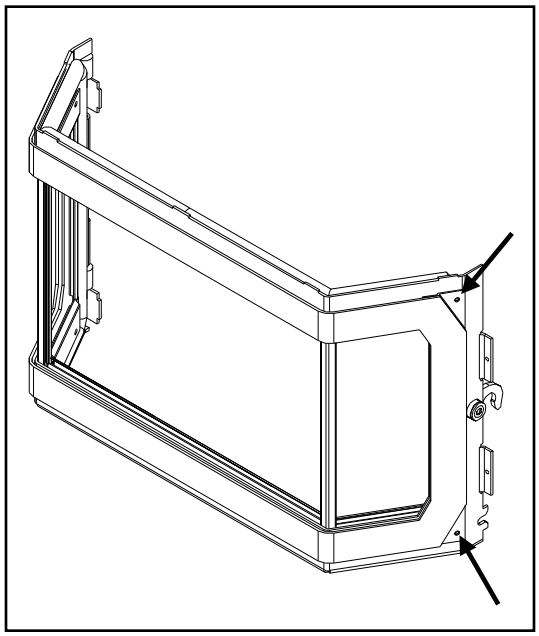

Figure 35: EF4 front screws.

Troubleshooting

DO NOT:

- Hold the start-up switch down; this is a momentary contact switch and can be damaged if held down too long.
- Service the stove with wet hands. The stove is an electrical appliance, which may pose a shock hazard if handled improperly. Only qualified technicians should deal with possible internal electrical failures.
- Remove any screws in the firebox without first lubricating them with penetrating oil.

What to do if:

1. The stove will not start.
2. The stove will not operate when hot.
3. The exhaust blower will not function normally.
4. The convection blower will not function normally.
5. Ignitor: The pellets will not light.
6. The auger motor does not function normally.
7. The dial-a-fire has no effect on the fire.
8. The stove will not shut off.
9. The stove keeps going out.

***NOTE:** All troubleshooting procedures should be carried out by qualified technicians or installers.

1. The stove will not start

√ Make sure the stove is plugged in and the wall outlet is supplying power.

√ Push the Start-up switch. If the stove fails to start, unplug the unit and open the hinged side panels (held tight with one screw at the top, front).

√ With the stove unplugged, examine all connections. Make sure they are firmly connected and that there are no exposed wires touching the stove (except the chassis ground wire).

√ Check the continuity and placement of connections against the "Wiring Diagram" in this manual.

√ Ensure that the connections to the fifteen (15) minute start-up timer are correct.

√ Attempt to bypass the switch by inserting a jumper wire between the red and white wires that attach to the switch. Plug the stove back in. If the stove starts, replace the switch.

√ If this fails, replace the (15) minute start-up timer.

Caution: Installation of a new start-up timer without checking the ignitor resistance may cause another failure to the new start-up timer due to a short in the ignitor. The proper resistance through the ignitor should be 30Ω to 50Ω ±3Ω.

2. The stove will not operate when hot

√ Check the hopper for fuel.

√ Incorrect air damper setting - Excessive air may consume the fire too quickly before the next drop of fuel, leaving completely unburned fuel in the burn pot liner. Insufficient air will cause build up, further restricting the air flow through the Burn Pot Liner. This in turn will cause the fuel to burn cold and very slowly. Fuel may build up and smother the fire. **(NOTE: Unit may require a change to the vent system or installation of fresh air to correct Air to Fuel ratio problems).**

√ Combustion Blower failure - The Combustion Blower is not turning fast enough to generate the proper vacuum in the fire box. Visual Check – is the blower motor turning?

√ Check Vacuum levels in the exhaust channel by bypassing the Vacuum Switch, then remove the Vacuum hose from Vacuum Switch. Check exhaust vacuum readings by placing the open end of the Vacuum Hose on a Magnahelic Gauge (readings must be above 0.10" W.C. on low fire).
Note: If the motor fails to reach a 0.10" W.C. reading, then replace the Combustion Blower.

√ Poor Quality Fuel – Insufficient energy in the fuel to produce enough heat to keep the stove burning or operational.

√ Exhaust Temperature Sensor failure – Bypass sensor located on Exhaust Blower. If stove now operates properly, the unit may require cleaning or a new sensor. Contact your local dealer for service.

√ The unit may require cleaning. Contact your local dealer for service.

√ Unplug the stove, open the left side panel. Jump the two (2) brown leads that are attached to the 120°F (49°C) temperature sensor. If the stove operates replace the 120°F (49°C) sensor.

3. The exhaust motor will not function normally

√ Open the left side panel, check all connections against the "Wiring Diagram" in this manual.

√ Thoroughly check for broken wires or connections.

√ If all the connections are verified and the exhaust blower does not function at all, tap lightly on the exhaust blower's motor end cap. This may loosen a tight motor.

√ Apply 115 V AC directly to the exhaust blower. If the motor does not run, replace the blower.

√ If the motor runs, check the exhaust potentiometer in the dial-a-fire. Remove the grey wires from the exhaust motor speed controller and measure the resistance (10Ω. to 400kΩ). If this range is not present or it is an open circuit, replace the speed controller.

√ Check all wires for continuity.

√ Replace the exhaust motor phase control (speed control module).

√ Contact your local dealer for service.

4. The convection blower will not function normally

√ Check all the connections between the controller, switch, and the convection blower against the "Wiring Diagram" in this manual.

√ If the convection motor will not run, apply 115 V AC to the motor directly. If the motor runs, replace the fan controller. If the motor does not run, the convection blower has failed. Replace the blower.

√ If the convection blower runs on high at all times (no control with the fan controller), check the connections from the 160°F (71°C) sensor (located on the upper left side of the fire wall) and convection fan controller to the blower. Disconnect one of the wires from the sensor. If control of the convection blower returns to the fan controller, replace the sensor.

√ If the motor is still on high, re-connect the sensor and replace the convection fan controller.

5. Ignitor- Everything else in the stove operates but the ignitor will not light the pellets

√ Make sure the burn pot liner is up tight and square to the ignitor tube.

√ Check to see if the exhaust blower is operating.

√ Check all the electrical connections on the 120°F (49°C) temperature sensor located on the exhaust channel.

√ Check the connections at the ignitor socket.

√ Place a jumper wire between the two (2) leads on the 120°F (49°C) temperature sensor. If the ignitor works, **replace the sensor.**

√ If the ignitor does not work, **replace the ignitor**

NOTE: The ignitor should be bright orange in color. If not, replace the ignitor.

6. The auger motor will not function normally

√ Check for obstructions in the hopper system.

√ Make sure the exhaust blower is operating.

√ Make sure the dial-a-fire is turned on.

√ Unplug the stove and open the side and back panels.

√ Check all the connections to the auger motor, auger dial-a-fire, vacuum sensor, 200°F (93°C) temperature sensor and the timing control module against the "Wiring Diagram" in this manual.

√ Check the condition of the vacuum hose (located on the left side of the stove). It should not be cracked or torn and should be installed on the top air inlet tube on the vacuum sensor.

√ Check the manual reset button on the 200°F (93°C) temperature sensor. If this sensor has been tripped, check for the cause of the over-heating before pushing the red button in. Check auger for movement.

√ If the auger still does not work, then apply 115 V AC directly to the auger motor. If the auger motor does not work, replace it.

√ By pass the 200°F (93°C) temperature sensor with a jumper wire. Check the auger. If the auger works replace the sensor.

√ Check the vacuum sensor by placing a jumper wire between the blue wires that are attached to the sensor. If the auger works, test to see if the exhaust blower is producing enough firebox vacuum.

√ To test the exhaust vacuum, place a magnehelic gauge in the sensor end of the vacuum tube. It should read 0.23" W.C. If the reading is good then replace the vacuum sensor.

√ If the auger motor still does not work, then attempt to by-pass the auger dial-a-fire control by removing the leads from the timing control module's second delay pins and placing a jumper across the pins. If the auger now cycles very quickly, test the dial-a-fire potentiometer. If the auger did not cycle, then replace the timing control module.

√ To test the dial-a-fire potentiometer. The potentiometer should have a range of 34 KΩ to 900 KΩ (± 10%). If the range is not close, then replace the potentiometer.

√ Check the voltage across the load pins of the timing module. It should be around 1 V to 2 V, cycling to line voltage during an auger pulse. If not, replace the timing control module.

√ Call your local dealer for service.

7. The dial-a-fire has no effect on the fire

Make sure all connections to the timer control module are secure.

Perform a resistance test to the dial-a-fire potentiometer by placing the two (2) test leads from a multimeter into the leads of the potentiometer. The potentiometer should have a range of 34 KΩ to 900 KΩ (± 10%).

Potentiometer Readings:
Full counter-clockwise (switched off) = open circuit, overload or infinite resistance
Low fire 800 KΩ to 900 KΩ
High fire 34 KΩ to 40 KΩ

If the range is not close or does not vary then replace the potentiometer.

8. The stove will not shut down

√ Check the connections to the 120°F (49°C) exhaust temperature sensor, start-up switch and the start-up timer against the "WIRING DIAGRAM" in this manual.

√ Check the 120°F (49°C) temperature sensor by removing one (1) of the brown wires from the sensor. The unit should shut down right away as long as the start button was not pressed within fifteen (15) minutes of this test. If the stove shuts down within fifteen (15) minutes, replace the 120°F (49°C) sensor. If the stove does not shut down within fifteen (15) minutes, test the switch.

√ To test the switch, the stove must be cold. Pull the plug, then plug the stove back in. If it fails to start, replace the switch.

9. The stove keeps going out

√ If the stove goes out and leaves fresh unburned pellets or cigarette-like ashes in the burn pot liner, the fire is going out before the 120°F (49°C) temperature sensor shuts the stove off.
- Check to see that the slider is in the correct position.
- Turn the dial-a-fire up slightly (poor quality pellets will require slightly higher settings).

√ If the stove goes out and there are partially burned pellets left in the burn pot liner, the stove shuts down due to a lack of air, exhaust temperature or power failure.
- Adjust the slider damper.
- Check to see if the stove needs a more complete cleaning.
- Turn the dial-a-fire up slightly (poor quality pellets will require slightly higher settings).
- Did the power go out?
- Contact your local Dealer for service.

√ If the stove goes out and there are no pellets in the liner, the auger is stopping.
- See "The auger motor will not function normally" and "The exhaust blower will not function normally."

Wiring Diagram

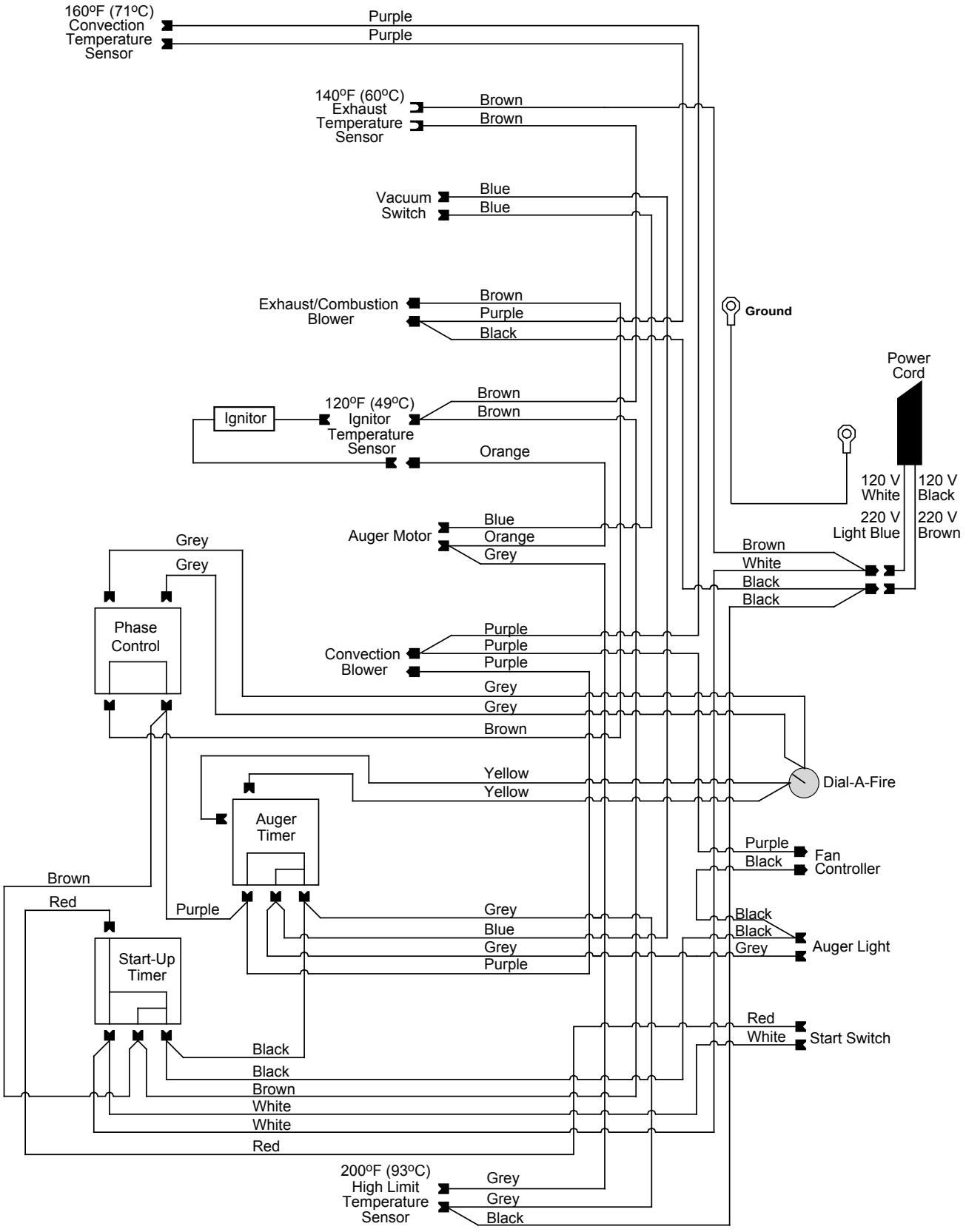

Part List

Reference Number	Description	Part Number
	Fan Controller Knob	EC-040
	IEC power cord - 115 V	EC-043
1	Auger motor - 115 V	EF-001
	Convection blower insulator (gasket)	EF-006
	Combustion main impeller	EF-008
	Combustion cooling impeller	EF-009
2	140°F (60°C) exhaust temperature sensor ceramic	EF-010
	Combustion blower mounting gasket	EF-011
	Combustion blower housing gasket	EF-012
3	Fan temperature sensor 160°F (71°C)	EF-013
4	Ignition temperature sensor 120°F (49°C) ceramic	EF-015
5	High limit temperature sensor 200°F (93°C) manual reset	EF-016
6	Vacuum switch - 115 V	EF-017
	Silicone hose	EF-018
	Aluminum hose barb	EF-019
7	Auger timer control - 115 V (3 sec)	EF-036
8	Power up timer control - 115 V	EF-037
9	Green light - 115 V	EF-041
10	Start up switch	EF-043
11	Fan controller with knob - 115 V	EF-045
	Ash pan latch (Insert)	EF-060
12	Auger brass bushings (set of 2)	EF-065
	Dial-a-fire knob	EF-067
	Shoulder bolt, hardened bushing and nut (set of 2)	EF-124
	Pellet stove cleaning brush	EF-156
13	Ash pan latch (Freestanding)	EF-178
	Pedestal & Ash Pan Gasket (10 feet)	EF-208
14	Convection blower - 115 V	EF4i-002
	Convection blower impeller	EF4i-004
15	Ignition burn pot	EF4i-021
16	Steel burn pot liner (Domestic)	EF4i-024
	Auger Brass Bushing and Plate	EF4i-026
17	Door Handle (wooden)	EF4i-028
18	Door latch with bolt (includes feral & bearing)	EF4i-029
19	Firebox liner with insulation	EF4i-047
	Heat exchanger rod	EF4i-051
	Door gasket ¾" firm round (7 feet)	EF4i-056
	Window channel tape	EF4i-058

Part List

Reference Number	Description	Part Number
20	Glass set	EF4i-062
	Slider damper spacers	EF4i-063
	Slider damper plate	EF4i-064
21	Firebox liner top plate	EF4i-066
	Wiring harness	EF4i-071
	Pedestal (Insert)	EF4i-074
22	Door latch cover & door hinge cover (set of 2)	EF4i-096
23	Back grill	EF4i-097
24	Ash sill	EF4i-103
25	Ash pan with latch	EF4i-105
26	Stove top (Freestanding)	EF4i-111
	Stove top (Insert)	EF4i-114
	Owner's Manual - Domestic	EF4i-118
27	Front grill	EF4i-123
	Cabinet side set - left and right (Insert)	EF4i-131
	Hopper side - left	EF4i-135
	Hopper side - right	EF4i-135A
	Spring for hopper lid (Insert)	EF4i-138
28	Pedestal (Freestanding)	EF4i-139
29	Cabinet side - left (Freestanding)	EF4i-142
30	Cabinet side - right (Freestanding)	EF4i-143
	Firebox ceramic wool insulation	20-017
	Log set	20-036
31	Cleaning port covers	20-037
32	Control panel door	20-040
33	Phase controller - 115 V	50-312
34	Dial-a-fire - 115 V	50-313
35	Auger	50-319
36	Control panel touch latch	50-323
37	Glass extrusions (set of 2)	50-483
38	Flush handle (for hopper lid)	50-523
39	Phase control panel with door, decal, switch, and light - 115 V (Freestanding)	50-678
39	Phase control panel with door, decal, switch, and light - 115 V (Insert)	50-679
40	IEC Power Cord Inlet Socket	50-713
41	Exhaust Blower Assembly - 115 V	50-901
	⅝" ID Auger Collar with Screw	50-968
42	Ignitor 300 Watt - 115 V	50-1067

Part List -Options

Reference Number	Description	Part Number
43	Steel brick lining	EF4i-130
	Bar set (set of 2) - Gold	EF4i-144
44	Door complete - Polished Nickel	50-261
44	Door complete - Gold	EF4i-092
44	Door complete - Painted	EF4i-094
45	Door cover (door A) - Painted	50-169
45	Door cover (door A) - Gold	50-170
45	Door cover (door A) - Polished Nickel	50-171
	Regular surround panel with Black trim (Insert)	50-102
	Oversize surround panel with Black trim (Insert)	50-103
	Oversize surround panel trim only - Black (Insert)	50-119
	Regular surround panel trim only - Black (Insert)	50-120
	Oversize surround panel trim only - Nickel (Insert)	50-131
	Regular surround panel trim only - Nickel (Insert)	50-132
	Regular surround panel trim only - Brass (Insert)	EC-051
	Oversize surround panel trim only - Brass (Insert)	EC-052
	Tapped corner bracket (Insert)	EC-053
	Regular surround panel (Insert)	EF4i-076
	Oversize surround panel (Insert)	EF4i-078
	Square oversize surround panel with brass trim (Insert)	EF4i-108

Part Diagram - Components

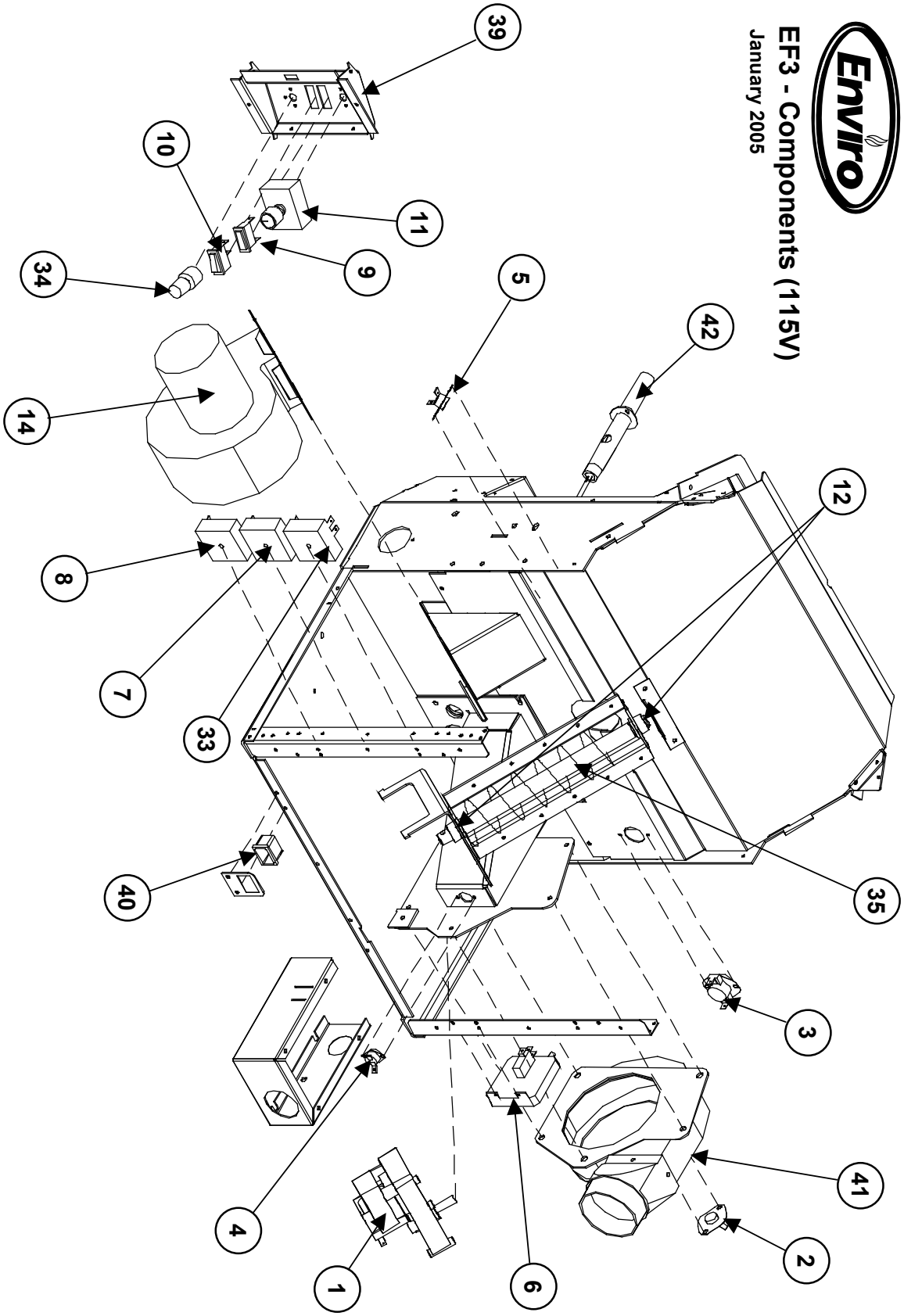

Part Diagram - Steel

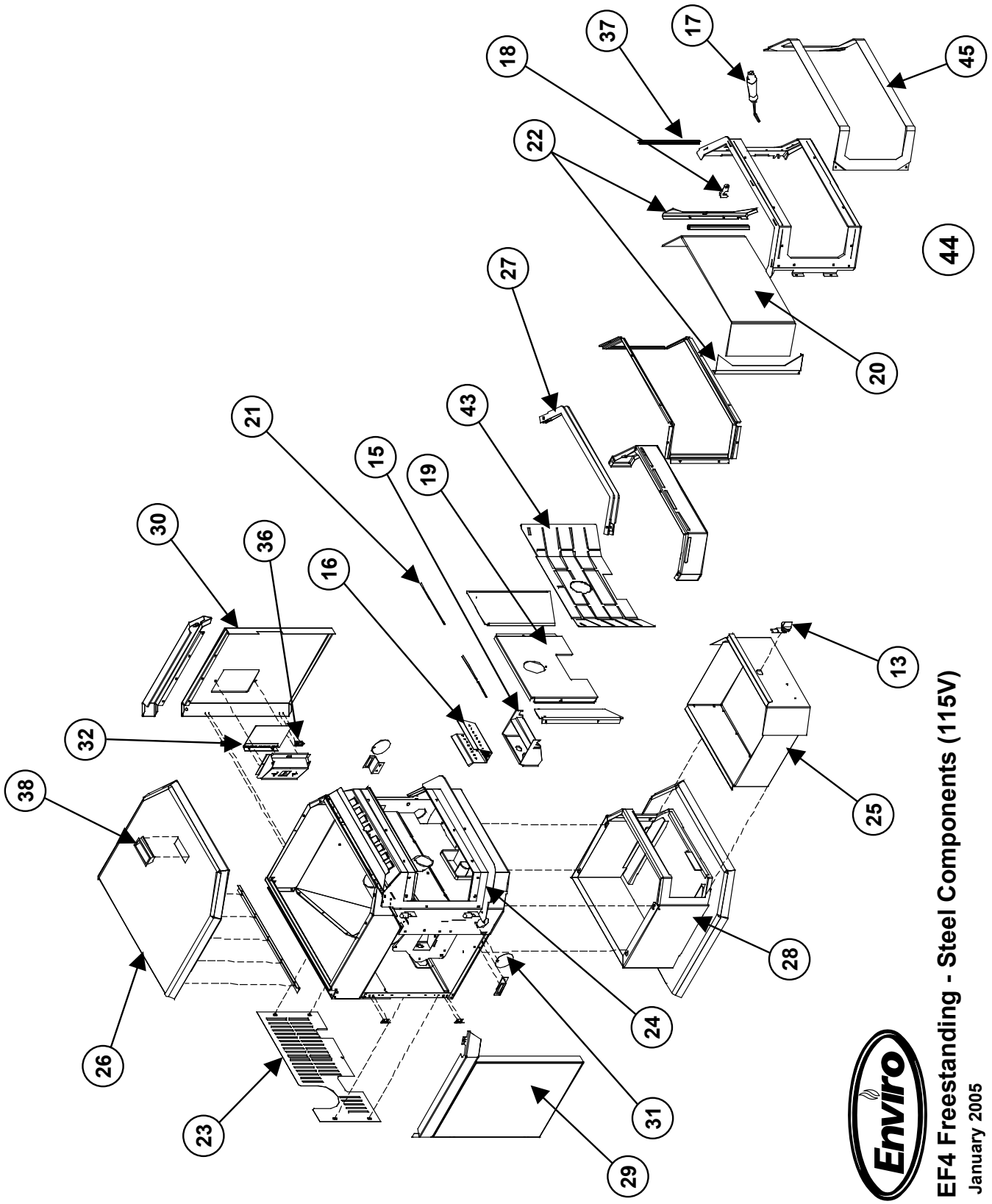

EF4 Freestanding - Steel Components (115V)

January 2005

Warranty

Sherwood Industries Ltd. gives a five year limited warranty on all steel manufactured parts. A one-year warranty is provided on all electrical components. The above limited warranties are extended only to the original purchaser.

There is no warranty on the following parts:
- Glass window
- Fiberglass rope gaskets
- refractory material
- burn pot liner
- paint
- enamel finish or gold plating where it applies

****NOTE:** The paint on the brick firebox lining may peel. This is due to the extreme conditions applied to the paint and is in no way covered under warranty.

WHEN FILING A WARRANTY CLAIM PLEASE COMPLETE THE FOLLOWING INFORMATION ON AN OFFICIAL WARRANTY CLAIM FORM:

TO THE DEALER:
- Name and address of dealer,
- Date of purchase
- Name, address and telephone number of purchaser
- Name, address and telephone number of installer
- Date of installation, and
- Serial number of the appliance

Ensure that you specify the nature of the complaint, defect, periodical malfunction, etc.

TO THE DISTRIBUTOR:
- Sign and verify that work and information are correct.
- Description and part # of any parts replaced.

The limited warranty covers defects in materials and workmanship as long as the products has been installed according to the manual's instruction. If the product is damaged or broken as a result of mishandling or misuse, the warranty does not apply. Removal and re-installation costs are not covered under this warranty.

It is the manufacturer's option whether to repair or replace the appliance. The shipping cost to and from the factory is to be paid by the consumer. All warranties by the manufacturer are set forth herein and no claim shall be made against the manufacturer on any oral warranty or representation.

The manufacturer assumes no responsibility for damage caused by household power fluctuations or power surges.

Under Warranty

For the do-it-yourself Individual

The consumer should be aware that the pellet appliance needs setting using tools that he/she might not have. It is recommended that you have a qualified installer install your pellet appliance

Sherwood Industries Ltd. reserves the right to make changes without any notice.

Installation Data Sheet

The following information must be recorded by the installer for warranty purposes and future reference.

NAME OF OWNER:

_____

ADDRESS:

_____

_____

_____

PHONE:_____

NAME OF DEALER:

_____

ADDRESS:

_____

_____

_____

PHONE:_____

MODEL:_____

SERIAL NUMBER:_____

DATE OF PURCHASE: _____ (dd/mm/yyyy)

DATE OF INSTALLATION:_____(dd/mm/yyyy)

MAGNEHELIC AT INSTALL:_____

INSTALLER'S SIGNATURE:

_____

NAME OF INSTALLER:

_____

ADDRESS:

_____

_____

_____

PHONE:_____

MANUFACTURED BY:
SHERWOOD INDUSTRIES LTD.
6782 OLDFIELD RD. SAANICHTON, BC, CANADA V8M 2A3
www.envirofire.biz
January 12, 2005
C-10803