SHERWOOD INDUSTRIES IS AN ENVIRONMENTALLY RESPONSIBLE COMPANY. THIS MANUAL IS PRINTED ON RECYCLED PAPER.

PLEASE KEEP THESE INSTRUCTIONS FOR FUTURE REFERENCE

Enviro

Haven

DIRECT VENT FIREPLACE

BY: SHERWOOD INDUSTRIES LTD

OWNER'S MANUAL

WHAT TO DO IF YOU SMELL GAS

- **Open windows/extinguish any open flame.**
- **Do not try to light any appliance.**
- **Do not touch any electrical switch or use any phone in your building.**
- **Immediately call your gas supplier from a neighbour's phone. Follow the gas supplier's instructions.**
- **If you cannot reach your gas supplier, call the fire department.**



This appliance may be installed in an after-market permanently located, manufactured (mobile) home, where not prohibited by local codes.

This appliance is only for use with the type of gas indicated on the rating plate. This appliance is not convertible for use with other gases, unless a certified kit is used.

WARNING

If the information in this manual is not followed exactly, a fire or explosion may result causing property damage, personal injury or loss of life. Installation and service must be performed by a qualified installer, service agency or the gas supplier.

FOR YOUR SAFETY

Do not store or use gasoline or other flammable vapours and liquids in the vicinity of this or any other appliance.

INTERTEK C Warnock Hersey US

Massachusetts installations (Warning): This product must be installed by a licensed plumber or gas fitter when installed within the Commonwealth of Massachusetts. Other Massachusetts code requirements: Flexible connector must not be longer than 36in., a shut off valve must be installed; only direct vent sealed combustion products are approved for bedrooms/bathrooms. A carbon monoxide detector is required in all rooms containing gas fired direct vent appliances.

Safety Precautions

FOR SAFE INSTALLATION AND OPERATION OF YOUR "ENVIRO" HEATER, PLEASE CAREFULLY READ THE FOLLOWING INFORMATION:

- All ENVIRO gas-fired appliances must be installed in accordance with their instructions. Carefully read all the instructions in this manual first. Consult the building authority having jurisdiction to determine the need for a permit prior to commencing the installation.
- **NOTE:** Failure to follow these instructions could cause a malfunction of the fireplace, which could result in death, serious bodily injury, and/or property damage.
- Failure to follow these instructions may also void your fire insurance and/or warranty.

GENERAL

- Installation and repair should be done by a qualified service person. The appliance should be inspected before the first use and, at least, annually by a qualified service person. More frequent cleaning may be required due to excessive lint from carpeting, bedding material, etc. It is imperative the control compartments, burners and circulating air passageways of the appliance be kept clean.
- Due to high temperatures, the appliance should be located out of high traffic areas and away from furniture and draperies.

Children and adults should be alerted to the hazards of high surface temperatures and should stay away to avoid burn or clothing ignition.

- Young children should be carefully supervised when in the same room as the appliance.
- Clothing or other flammable materials should not be placed on or near the appliance.

FOR YOUR SAFETY

- Installation and service must be performed by a qualified installer, service agency or gas supplier.
- This installation must conform to local codes or, in the absence of local codes, to the current CAN/CGA-B149 installation code (Canada) or National Fuel Gas Code ANSI Z223.1.2 (USA)
- To prevent injury, do not allow anyone who is unfamiliar with the stove to operate it.

- **To prevent injury, if the pilot or pilot and burners have gone out on their own, open the glass door and wait 5 minutes to air out before attempting to re-light the stove.**

- Always keep the area around these appliances clear of combustible material, gasoline and other flammable liquids and vapours.
- These appliances should not be used as a drying rack for clothing or for hanging Christmas stockings/ decorations.
- Due to the paint curing on the stove, a faint odor and slight smoking will likely be noticed when the stove is first used. Open a window until the smoking stops.

Always connect this gas stove to a vent system and vent to the outside of the building envelope. Never vent to another room or inside the building. Make sure the specified vent pipe is used, properly sized and of adequate height to provide sufficient draft. Inspect the venting system annually for blockage and signs of deterioration.

WARNING: Failure to position the parts in accordance with the diagrams in this booklet, or failure to use only parts specifically approved with this appliance, may result in property damage or personal injury.

WARNING: Do not operate with the glass front removed, cracked or broken. Replacement of the glass should be done by a licensed or qualified service person.

- Never use solid fuels such as wood, paper, cardboard, coal, or any flammable liquids, etc., in this appliance.
- Do not use this heater if any part has been under water. Immediately call a qualified service technician to inspect the heater and to replace any part of the control or gas control systems that have been under water.
- Do not abuse the glass by striking it or slamming the door shut.

Table of Contents

Safety Precautions....2
Table of Contents....3
Codes And Approvals....4
    Rating Label Location....4
Specifications....5
    Dimensions....5
Operating Instructions....6
    Pilot Lighting Instructions....6
    Pilot Light....7
    Blower speed....7
    Air Shutter....7
    Burner Lighting....8
    Remote controls....8
    Normal Sounds During Operation....8
Maintenance And Service....9
    Routine Maintenance....9
    Cleaning The Glass....9
    Cleaning The Firebox....9
    Replacing the Glass....9
    Cleaning Decorative Surfaces....10
    Glass Door Removal....10
    Fuel Conversion....11
Initial Installation....12
    Introduction....12
    Placement and Framing....12
    Corner Installation....13
    Raised Fireplaces and Hearths....13
    Framing Mount Brackets....14
    Wall Finishes....15
    Mantle Clearances....16
    Vent Termination Restrictions....17
    Fireplace Horizontal Vent Kit 50-1235....18
    Other Approved Vent Parts....19
    Venting....21
    Vent Configurations and Restrictor Settings....22
    Horizontal Termination....23
    Vertical Termination....24
    Electrical System For Thermostat....27
    Installation Of Electrical Wiring For The Optional Fan Kit....27
    Gas Line Connection and Testing....28
    Optional Fan Kit Installation....29
    Optional Fan Kit Installation Through Back of Haven....29
Secondary Installation....30
    Optional Fan Kit Installation Through Front of Haven....30
    Log Set and Ember Installation....31
    Installation of Steel Firebox Liner or Optional Ceramic Firebox Liner....33
Trouble Shooting....34
Parts List - Components....35
Parts List - Options....36
Parts Diagram - Components....37
Parts Diagram - Fascia....38
Warranty....39
Installation Data Sheet....40

Codes And Approvals

DIRECT VENT ONLY: This appliance draws all of its air for combustion from outside the dwelling, through a specially designed vent pipe system.

This appliance has been tested and approved for installations from 0 feet to 4500 feet (1372 m) above sea level.

In the USA: The appliance may be installed at higher altitudes. Please refer to your American Gas Association guidelines which state: the sea level rated input of Gas Designed Appliances installed at elevations above 2000 (610 m) feet is to be reduced 4% for each 1000 feet (305 m) above sea level. Refer also to local authorities or codes which have jurisdiction in your area regarding the de-rate guidelines.

In Canada: When the appliance is installed at elevations above 4500 feet (1372 m), the certified high altitude rating shall be reduced at the rate of 4% for each additional 1000 feet (305 m).

- This appliance has been tested by INTERTEK (**Warnock Hersey**) and found to comply with the established VENTED GAS FIREPLACE HEATER standards in CANADA and the USA as follows:

VENTED GAS FIREPLACE HEATER (HAVEN; NG/LPG)

TESTED TO: ANSI Z21.88a-2003/CSA 2.33a-2003 VENTED GAS FIREPLACE HEATERS

CAN/CGA 2.17-M91 GAS FIRED APPLIANCES FOR HIGH ALTITUDES

CSA P.4.1-02 TESTING METHOD FOR MEASURING ANNUAL FIREPLACE EFFICIENCY

This ENVIRO HAVEN Fireplace:

- Has been certified for use with either natural or propane gases. (See rating label.)
- Is not for use with solid fuels.
- Is approved for bedroom or bed sitting room. (**IN CANADA**: must be installed with a listed wall thermostat. **IN USA**: see current ANSI Z223.1 for installation instructions.)
- Must be installed in accordance with local codes. If none exist, use current installation code CAN/CGA B149 in Canada or ANSI Z223.1/NFPA 54 in the USA.
- Must be properly connected to an approved venting system and not connected to a chimney flue serving a separate solid-fuel burning appliance.
- Can be used with a fan kit (part number 50-1211); if so, 14/2 wire power cable must be wired to the appliance upon installation.

IMPORTANT NOTICE (Regarding first fire up): When the unit is turned on for the first time, it should be turned onto high without the fan on for the first 4 hours. This will cure the paint, logs, gasket material and other products used in the manufacturing process. It is advisable to open a window or door, as the unit will start to smoke and can irritate some people. After the unit has gone through the first burn, turn the unit off including the pilot, let the unit get cold then remove the glass door and clean it with a good gas fireplace glass cleaner, available at your local ENVIRO dealer.

NATIONAL FIREPLACE INSTITUTE®

NFI

CERTIFIED

www.nficertified.org

We recommend that our gas hearth products be installed and serviced by professionals who are certified in the U.S. by the National Fireplace Institute® (NFI) as NFI Gas Specialists.

Rating Label Location:

The rating label is located under the control panel and is attached to a rectangular metal sheet that is chained to the fireplace.

Specifications

INSTALLATION OPTIONS:

- Parallel to a wall or placed in a corner
- Vertical or horizontal venting
- With a floor hearth or raised up the wall

WARNING:

Operation of this heater when not connected to a properly installed and maintained venting system can result in carbon monoxide (CO) poisoning and possible death.

Dimensions:

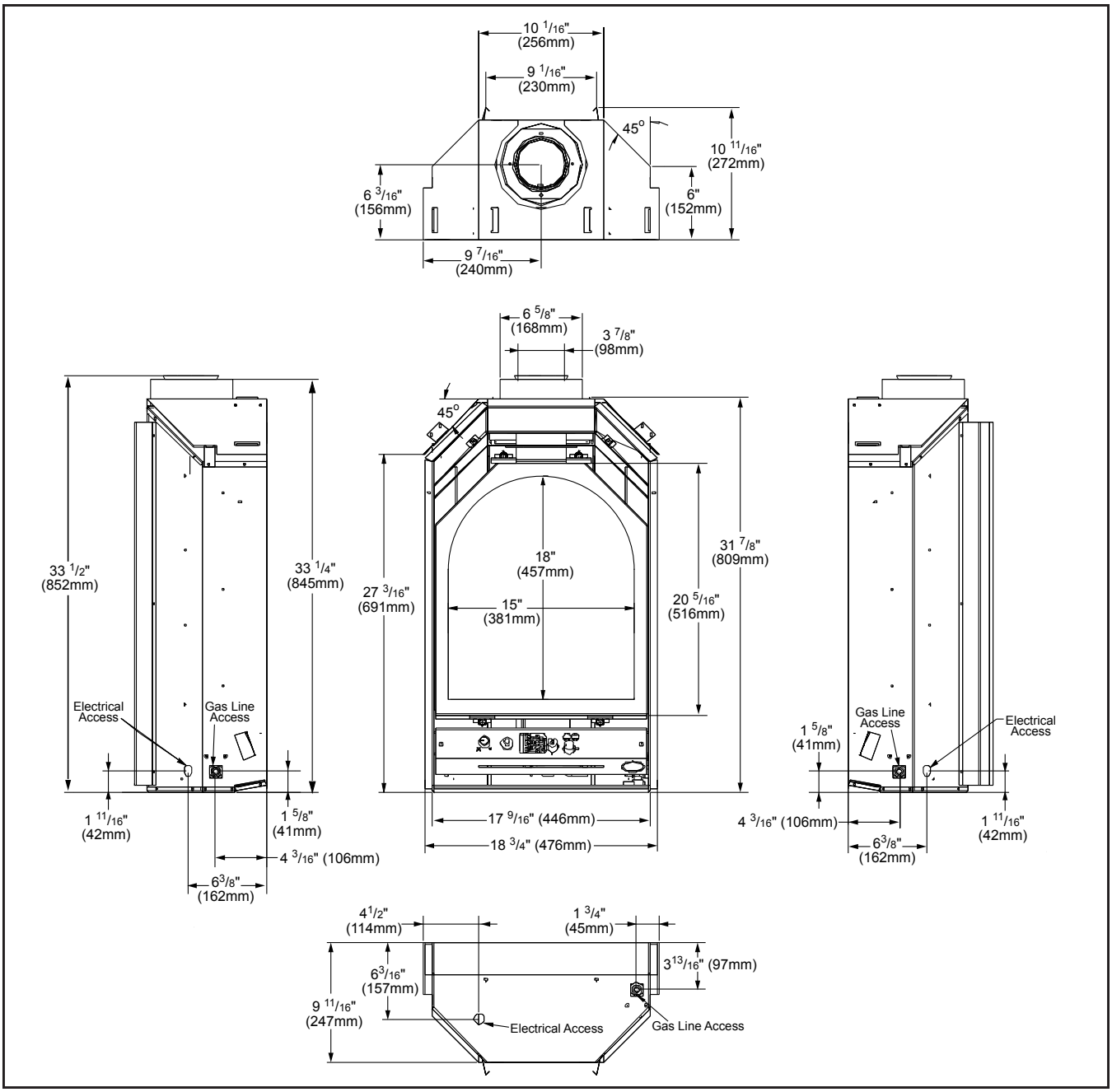

Figure 1. Dimensions of the Fireplace.

Operating Instructions

For Your Safety, Read Safety Precautions And Lighting Instructions Before Operating

WARNING: IF YOU DO NOT FOLLOW THESE INSTRUCTIONS EXACTLY A FIRE OR EXPLOSION MAY RESULT, CAUSING PROPERTY DAMAGE, PERSONAL INJURY OF LOSS OF LIFE.

Pilot Lighting Instructions:

CAUTION: Hot while operating. Do not touch. Severe burns may result. Keep children, clothing, furniture, gasoline or other flammable vapors away.

CAUTION: Do not operate this fireplace with the glass removed, cracked or broken. Replacement of the panel(s) should be done by a licensed or qualified person! This appliance needs fresh air for safe operation and must be installed with provisions for combustion and ventilation air. See installation and operating instructions manual. Keep burner and control compartment clean.

WARNING: Improper installation, adjustment, alteration, service or maintenance can cause injury or property damage, or loss of life. Refer to owner's information manual provided with this appliance. For assistance or additional information consult a qualified installer, service agency or the gas supplier.

Keep burner and control compartment clean. See installation and operating instructions accompanying appliance.

FOR YOUR SAFETY READ BEFORE

WARNING: IF YOU DO NOT FOLLOW THESE INSTRUCTIONS EXACTLY, A FIRE OR EXPLOSION MAY RESULT CAUSING PROPERTY DAMAGE, PERSONAL INJURY OR LOSS OF LIFE.

A) This appliance is equipped with a pilot, which must be lit by hand by following these instructions exactly.

B) BEFORE LIGHTING smell all around the appliance area for gas and next to the floor because some gas is heavier than air and will settle on the floor.

WHAT TO DO IF YOU SMELL GAS:
Do not try to light any appliance. Do not touch any electrical switch: do not use any phone in your building. Immediately call your gas supplier from a neighbors' phone. Follow the gas suppliers instructions. If you cannot reach your gas supplier, call the fire department.

C) Use only your hand to push in or turn the gas control knob; NEVER use tools. If the knob will not push in or turn by hand, do not try to repair it. Call a qualified service technician. Force or attempted repair may result in a fire or explosion.

D) Do not use this appliance if any part has been under water. Immediately call a qualified service technician to inspect the appliance and to replace any part of the control system and any gas control which has been under water.

LIGHTING INSTRUCTIONS

1. STOP! Read the safety information above on this label.
2. Turn off all electrical power to this appliance.
3. Turn the gas control knob clockwise ↷ to the off position.
4. Open door. Wait five (5) minutes to clear out any gas. Close door. If you smell gas STOP! Follow "B" in the above safety information. If you do not smell gas go to the next step.
5. Find pilot-located to the right behind the side log. Turn the gas control knob counter-clockwise ↶ to "PILOT". Push the gas control in fully and hold. Keep knob depressed for about 30 seconds after pilot is lit. Release knob. If pilot goes out, repeat steps 4 through 5.

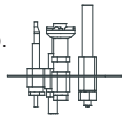

WARNING: this gas valve has a lockout device, which will not allow the pilot burner to be relit until the thermocouple has cooled. If the knob does not pop up when released, stop and immediately call your service technician or gas supplier.

If the pilot does not stay lit after several tries, turn the gas control knob to "OFF" and call your service technician or gas supplier.

6. Turn the gas control knob counter clockwise ↶ to the "ON" position. Flip the burner switch to "ON" THEN TURN THE "HI/LOW" knob to the desired setting.
7. Turn on the electrical power to the unit.

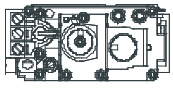

TO TURN OFF GAS TO APPLIANCE

1. Flip burner switch to "OFF"
2. Turn the gas control knob clockwise ↷ to the "OFF" position
3. Turn off all electrical power to the appliance if service is to be performed.

C-10078

Figure 2. Lighting Instruction Label

Operating Instructions

Pilot Light:

1. Turn off the gas to the fireplace. **If not recently done, remove the glass and let the unit air out for at least five (5) minutes to clear out any gas.** Turn on gas to the heater. Leak test all joints with soapy water. **NEVER USE OPEN FLAME FOR LEAK TESTING.**

2. Start the pilot by pressing the gas control knob and turning it to PILOT. While holding the gas control knob in, press the piezo ignitor several times until the pilot light starts. Hold the gas control knob in for 30 seconds. Check that the pilot has fully engulfed the thermocouple assembly (see Figure 3).

3. Start the main burner by turning the gas control knob to ON and then turn the rocker switch to ON. Check that all burner ports have flame.

4. Leak test all gas joints again.

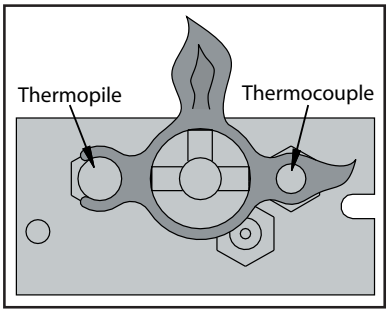

Figure 3. Pilot Flame

Air Shutter:

The air shutter adjustment lever is above the left side of the control valve (see Figure 4).

The air shutter allows the amount of air coming into the fireplace to be adjusted in order to accommodate different altitudes and venting arrangements. Start the pilot and then the burner. Make sure the pilot flame is burning normally and none of the burner ports are plugged. Let the fireplace burn for roughly fifteen minutes and then examine the flames, compare the flames to Figure 40.

The ideal flame will be blue at the base and light orange above. The flames should be of medium height. If the flames look like this, no venturi adjustment is needed. If the flames are fairly short and mostly blue, the fireplace is getting too much air. Therefore, the air shutter should be closed (moved right) slightly until the correct flames are achieved. Flames that are very orange, with tall, dark, stringy tips, are not getting enough air. Open (move left) the venturi until the flames clean up. If the venturi is opened, or closed all the way, and the correct flames cannot be attained, turn off the gas and contact your dealer.

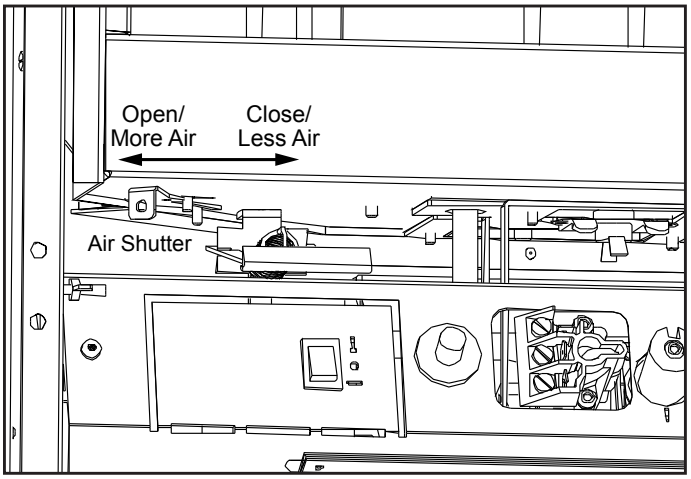

Figure 4. Air shutter adjustment lever.

Warning: Incorrect venturi adjustment may lead to improper combustion, which could be a safety hazard. Contact your dealer if there is any concern about the venturi adjustment.

Blower speed:

The blower will come on only when the fireplace is up to temperature (approximately 20 minutes). The speed of the fan can be changed by turning the fan control knob. To turn the blower off, turn the knob COUNTER CLOCKWISE until it "clicks" off (Figure 5).

It is advisable not to operate the blower below 1/3 speed as it puts a strain on the windings of the blower and running the blower at lower speeds could also cause premature fan failure.

Operating Instructions

For Your Safety, Read Safety Precautions And Lighting Instructions Before Operating

Burner Lighting:

A) Make sure the pilot is lit.
B) Turn gas control knob COUNTER CLOCKWISE to ON.
C) Flip the burner switch to ON.
D) Turn HI/LO knob to the desired flame height.
E) Turn on all electrical power to the unit.
NOTE: Check that all burner holes are lit.

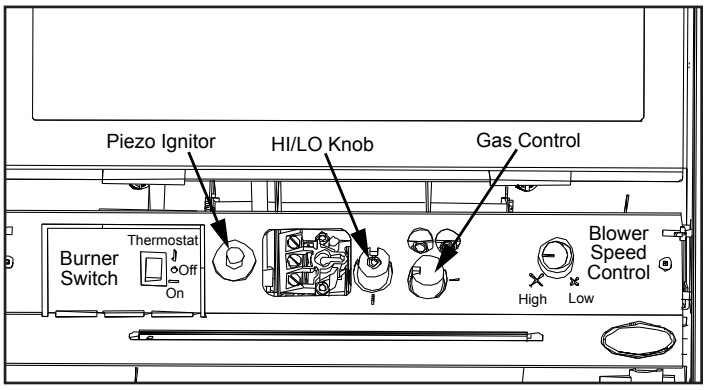

Figure 5. Control Panel

TO TURN GAS FIREPLACE OFF:

Flip switch to OFF to turn off burners only.

If the fireplace is to be turned off for the season, or for servicing, turn the gas shut off valve to OFF. DO NOT FORCE IT. If the unit is going to be serviced, turn off the electrical power to the unit as well.

NOTE: When the unit is turned on for the first time, it should be turned onto high, with the fan OFF, for the first two to four hours. This will cure the paint, logs, gasket material, and other products used in the manufacturing process. It is advised that a door or window be opened as the unit will start to smoke, which can irritate some people. After the unit has gone through the first burn, turn the unit OFF, including the pilot, and let the unit get completely cold. Then remove the glass and clean it with a good gas fireplace glass cleaner, available at your local Enviro dealer. See "Maintenance And Service; Glass Door Removal" and "Maintenance And Service; Cleaning The Glass."

Remote controls:

This fireplace can use an optional remote control or an optional cordless wall thermostat. If either of these are to be used to control the fireplace for the majority of the time, leave the ON/OFF switch (on the control panel) in the remote/thermostat position. Consult the instructions included with the remote/wall thermostat for operation guidelines.

Normal Sounds During Operation:

Table 1: Normal Sounds

Component	Sound & Reason
Haven & Fascia	Creaking when heating up or cooling down.
Burner	Light pop or poof when turned off; this is more common with LP units.
Temperature Sensor	Clinking when it senses to turn the blower on or off.
Pilot Flame	Quiet whisper while the pilot flame in on.
Blower / Fan	Air movement that increase and decreases with the speed of the blower. The blower is pushing the heat from the fireplace into the room.
Gas Control Valve	Dull click when turning on or off, this is the valve opening and closing.

Maintenance And Service

Routine Maintenance:

At least once a year, run through the following procedures to ensure the system is clean and working properly. Check the burner to see if all the ports are clear and clean. Check the pilot to make sure it is not blocked by anything. The pilot flame should be blue with little or no yellow on the tips.

Warning: Clearances must be sufficient to allow access for maintenance and service

Warning: Failure to position the parts in accordance with this manual, or failure to use only parts specifically approved with this appliance may result in property damage, personal injury, or void your warranty.

The venting system must be periodically examined; it is recommended the examination is done by a qualified agency.

Cleaning The Glass:

When the fireplace is off and has cooled, remove the face of the fireplace along with the glass. See Maintenance And Service - Glass Door Removal. Check the gasket material on the back of the glass, making sure that it is attached and intact.

During a cold start up, condensation will sometimes form on the glass. This is a normal condition with all gas fireplaces. However, this condensation can allow dust and lint to cling to the glass surface. Initial paint curing of the appliance may leave a slight film behind the glass, a temporary problem. The glass will need cleaning about two weeks after installation. **Use a mild glass cleaner and a soft cloth**; **abrasive cleaners will damage the glass and plated surfaces.** Depending on the amount of use, the glass should require cleaning no more than two or three times a season. In some instances, a white film may form on the glass, caused by gas impurities. The white film can be removed by using ceramic polish. **Do not clean the glass when it is hot.**

Cleaning The Firebox:

Remove the logs carefully, as they are very fragile. Gently remove all the coal chunks and rock wool and place on a paper towel. Vacuum the bottom of the firebox thoroughly. Carefully clean any dust off the logs and remove any lint from the burner and pilot. At this time, inspect the burner pan for cracking or severe warping. If a problem is suspected, contact your dealer. Check the logs for deterioration or large amounts of soot; a small amount on the bottom side of the logs is normal. Replace the logs and embers as in the Log Set and Ember Installation section. If new/more rock wool is required, contact your nearest ENVIRO dealer.

Replacing the Glass:

The glass in the fireplace is a high temperature ceramic. If the glass is damaged in any way, a factory replacement is required (see Parts List - Components). Wear gloves when handling damaged glass door assembly to prevent personal injury. When the glass door assembly is being transported, it must be wrapped in newsprint and tape and/or a strong plastic bag. Do not operate your fireplace with the glass front removed, cracked or broken. Removal and replacement of the glass from the door **must** be done by a licensed or qualified service person. **The glass must be purchased from an ENVIRO dealer. Substitute materials will void the warranty.**

Maintenance And Service

Cleaning Decorative Surfaces:

Painted and porcelain faces should be wiped with a damp cloth periodically. If a plated face has been purchased, it should be unpacked/unwrapped carefully to avoid getting anything on the surface of the finish, including cleaners, polish and finger prints. It is important to note that fingerprints and other marks can leave a permanent stain on plated finishes. **To avoid this, give the face a quick wipe with denatured alcohol on a soft cloth BEFORE lighting the fireplace.** Never clean the face when it is hot. Do not use other cleaners as they may leave a residue, which can become permanently etched into the surface.

If your fingers come into contact with the antique copper finish, the oils left as fingerprints on the copper can cause discoloration, which will eventually turn green in that area. You can clean the patina or discoloured areas of the antique copper finish with "OO" 3M green sanding pads. These can be purchased from most hardware stores. On the areas with discoloration, use the sanding pads to sand in the same direction as the brushed finish, then blend the finish by feathering in the surrounding area. This refinishing procedure has been approved by the manufacturer and will not harm the finish. Please note: ANTIQUE COPPER IS THE ONLY FINISH THAT CAN BE SANDED, DO NOT SAND PEWTER, GOLD OR NICKEL FINISHES.

Glass Door Removal:

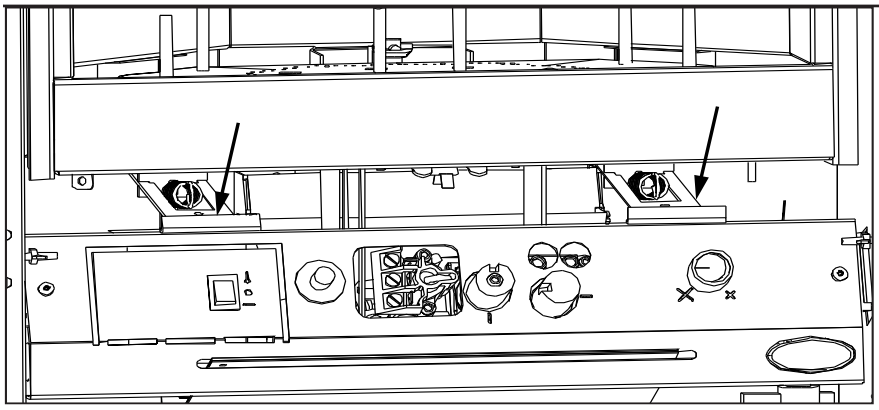

Figure 6. Bottom latches for glass, disengaged.

In order to install the log set, and for regular cleaning, the glass door must be removed. There are two (2) door latch mechanisms under and two (2) above the glass door shown in Figure 6 & 7. Each latch has two (2) finger grooves, use these to pull the mechanisms straight out. When the latches are unhooked, lift the door up and forward off the unit.

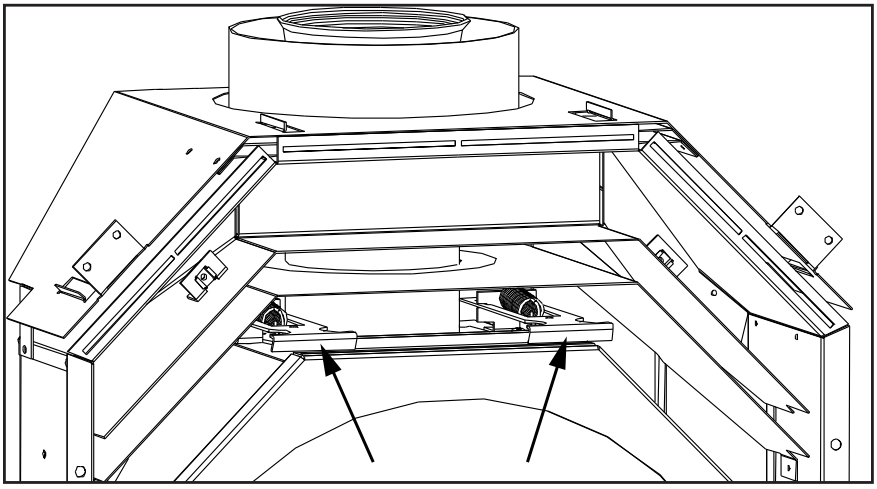

Figure 7. Top latches for glass door, engaged.

To replace the glass door, simply reverse the above procedure.

Warning: Do not touch or attempt to remove the glass if the fireplace is not completely cold.

WARNING: Never operate the fireplace with the glass removed.

Maintenance And Service

TO BE INSTALLED BY A QUALIFIED SERVICE AGENCY ONLY

Fuel Conversion:

Warning: This conversion kit shall be installed by a qualified service agency in accordance with the manufacturer's instructions and all applicable codes and requirements of the authority having jurisdiction. If the information in these instructions is not followed exactly, a fire, explosion or production of carbon monoxide may result causing property damage, personal injury or loss of life. The qualified service agency is responsible for the proper installation of this kit. The installation is not proper or complete until the operation of the converted appliance is checked as specified in the manufacturer's instructions supplied with the kit.

Please read and follow these instructions. Also, please read the instruction guidelines provided by S.I.T. on how to remove and install the HI/LO regulator.

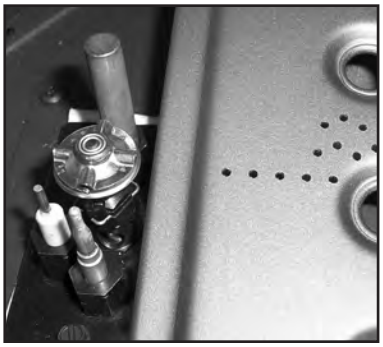

Figure 8. Ignitor assembly beside the burner.

Step 1. Carefully inspect all parts supplied with this conversion kit.

Step 2. Shut the gas supply off at the shut-off valve. (CAUTION: The gas supply shall be shut off prior to disconnecting the electrical power, before proceeding with the conversion.)

Step 3. Remove the glass as shown in the Maintenance and Service.

Step 4. Change the regulator on the front of the gas valve (follow the instructions provided by S.I.T.).

Step 5. To change the pilot, simply pull the pilot hood straight up to access the pilot injector. Using a 5/32 inch Allen key, remove the pilot injector.

Step 6. Install the new pilot injector supplied with this conversion kit. Simply screw the new injector inside the pilot hood, using the Allen key, and reinstall the hood by placing the hood on the assembly, line up the key way, and snap into place.

Step 7. Remove the main burner orifice with a ½ inch deep socket.

Step 8. Install the new orifice supplied. Be sure to put a bead of pipe-thread sealant or approved Teflon tape on the orifice threads before installing into the brass elbow.

Step 9. Reinstall the burner tray, log set, embers, and glass. When re-installing the burner, ensure that the burner to pilot hood relationship is as shown on Figure 8.

Step 10. Open the shut-off valve at the gas line to the unit located in the control panel area.

Step 11. Use a small brush to apply a warm soapy water solution to all gas connections (use a half dish soap and half warm water). If a gas leak is present, bubbling will occur. Gas leaks can be repaired by using an approved pipe thread sealant or approved Teflon tape. NEVER USE AN OPEN FLAME WHEN TESTING FOR LEAKS.

Step 12. Re-light the fireplace to ensure proper operation and proper flame appearance.

Step 13. MAKE SURE that the sticker provided by S.I.T. is installed, to signify that the valve has been converted to a different fuel type. Also, make sure that the rating plate has a conversion label to show this unit has been converted to a different fuel type.

A VISUAL CHECK OF THE REGULATOR KNOB IS NECESSARY TO DETERMINE WHETHER OR NOT THE REGULATOR IS THE CORRECT PART. A 50% TURN DOWN REGULATOR WILL HAVE ONLY ONE CORNER ON THE KNOB

Conversion Kit should contain the following:

(1) 50% turn down HI/LO regulator with three (3) T-20 Torx screws

(1) Pilot injector

Conversion instructions

Labels to show conversion

(1) Main Orifice (NG #48 DMS; LP #57 DMS)

Pilot Orifice (NG 0.62 mm; LP 0.35 mm)

Initial Installation

QUALIFIED INSTALLERS ONLY

Introduction:

This section of the owner's manual is for the use of qualified technicians only. Fireplace placement, hearths, facing, mantles, and venting terminations will be covered, as well as the gas and electric systems. There are several installation safety guidelines that must be adhered to. Please carefully read the safety precautions at the front of this manual.

Warning: Clearances must be sufficient to allow access for maintenance and service.

Placement and Framing:

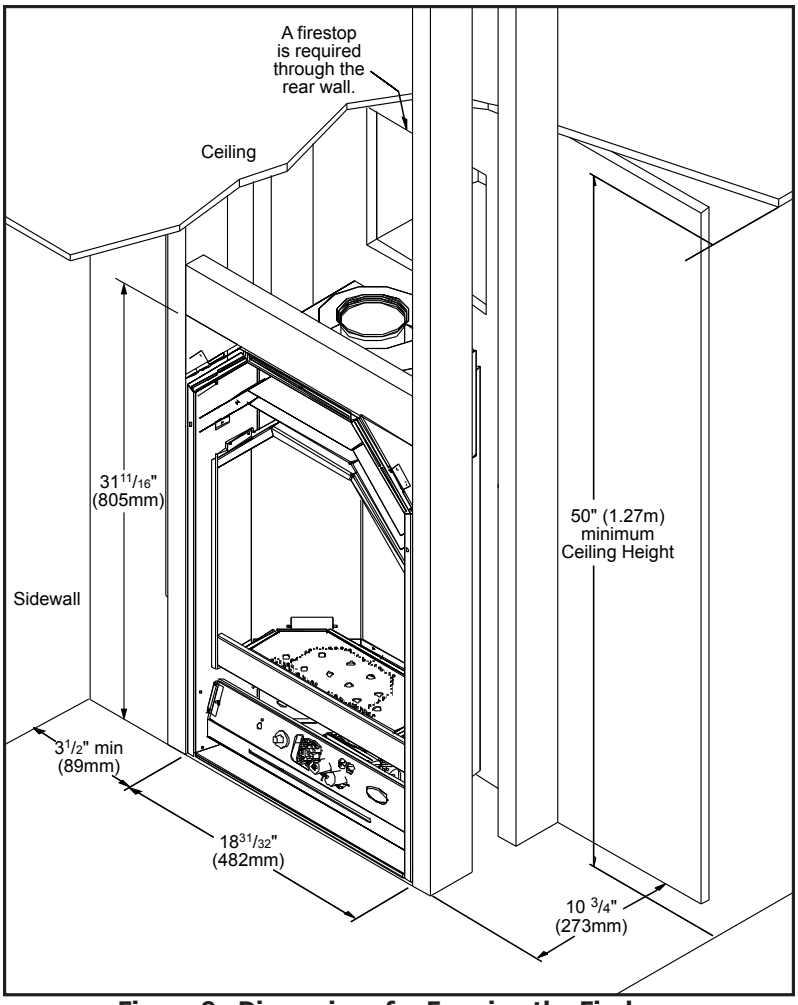

Figure 9. Dimensions for Framing the Firebox.

Table 2. Framing Dimensions.

Firebox Framing		
Depth	10¾"	27.3 cm
Width	18 31/32"	48.2 cm
Height	31 11/16"	80.5 cm
Side Gas/Electrical Inlet:		
Distance back	4 3/16"	10.6 cm
Distance up	1⅝"	4.1 cm
Bottom Gas/Electrical Inlet:		
Distance back	3 13/16"	9.7 cm
Distance up	1¾"	4.4 cm

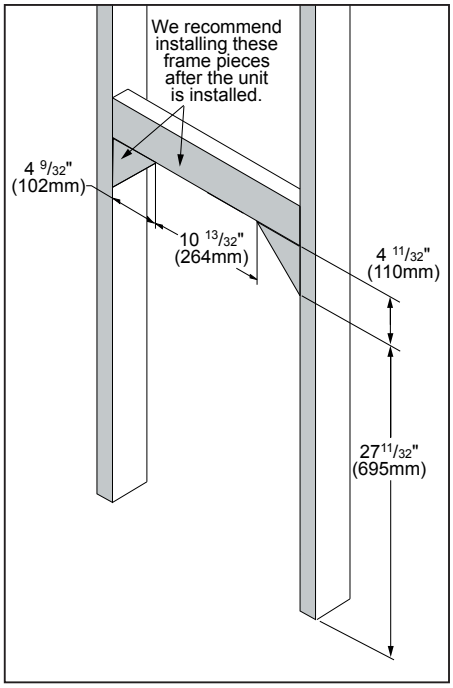

Figure 10. Dimensions for Top Framing the Firebox.

The fireplace can be located along a wall, raised or at floor level, or in a corner. There are specific framing measurements for each situation. The basic opening should have the dimensions shown in Figure 9. Refer to Figure 1 for the placement of the gas and electrical inlets. When the basic framing is done and the unit is installed the three (3) top pieces of the framing should be installed Figure 10.

The fireplace must have a strong and level surface to be placed on. The surface should be made of wood or a non-combustible material, not carpet.

QUALIFIED INSTALLERS ONLY

The framing boards may touch the top, side and back standoffs, but **no insulation or other material can be placed between the frame and the standoffs.**

The gas line, ⅜ inch NPT, can be brought to either the right side, the left side, or the bottom of the fireplace. If this set up is inconvenient, the electrical wire and the gas line configuration can be reversed.

The location should be chosen so the fireplace must be at least 36 inches (91.4 cm) from drapes, doors and other combustibles. The framed opening should also be a minimum of 3.5 inches (8.9 cm) from the nearest perpendicular wall (sidewall to the edge of the opening).

The HAVEN is designed so it can be installed at floor level without a required hearth.

Corner Installation:

The dimensions for installing a fireplace in the corner of a room are given in Figures 11. Refer to "Initial Installation - Vent Configurations and Restrictor Settings" for allowable pipe lengths.

Do not interfere with the structural integrity of the walls.

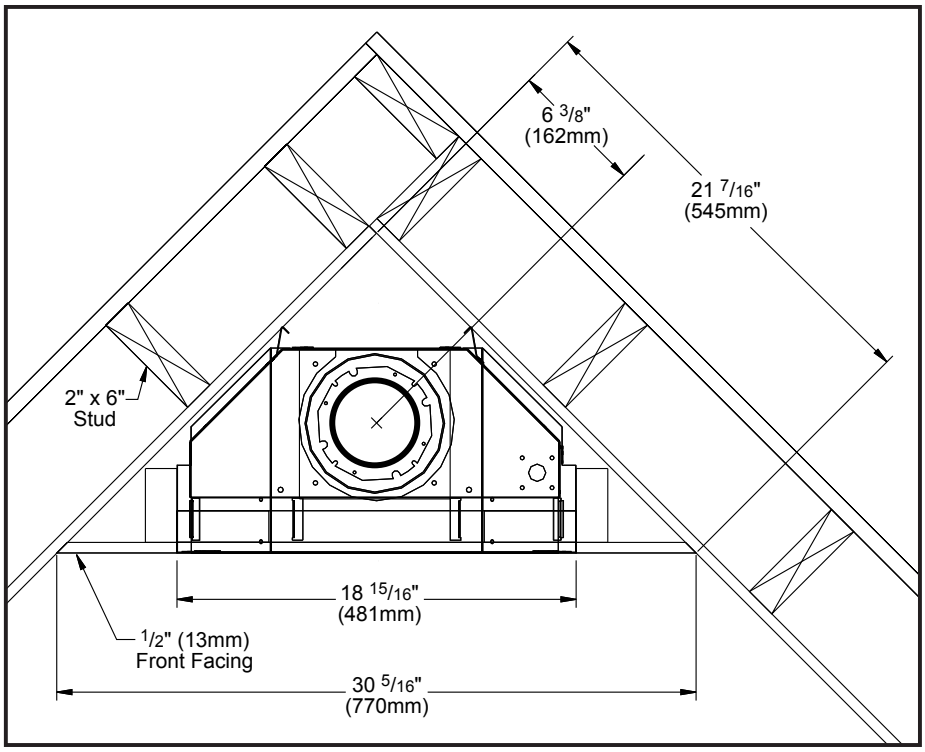

Figure 11. Dimensions for a corner installation.

Raised Fireplaces and Hearths:

Even though the Haven can be installed at floor level without a hearth, there are a few options with raised fireplaces: raised with a floor level hearth (Figure 12), raised with a raised hearth (Figure 13), or raised with no hearth (Figure 14). If the fireplace is raised, it cannot be placed within 18 inches (45.7cm) of the ceiling. When installing a raised fireplace, it is imperative that the support stand is strong enough to hold the weight of the fireplace (up to 140lb [63.5Kg]) and venting.

Initial Installation

QUALIFIED INSTALLERS ONLY

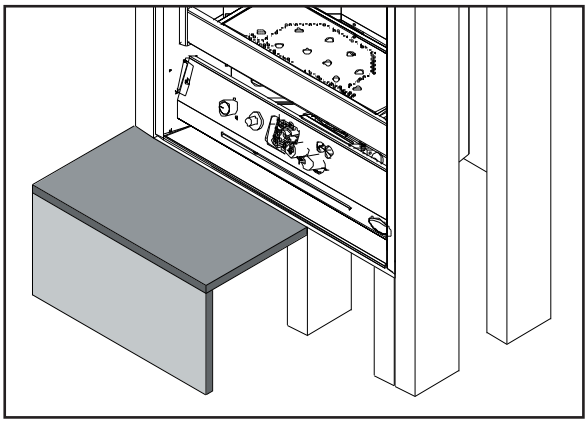

Figure 12. Raised Fireplace with Raised Hearth.

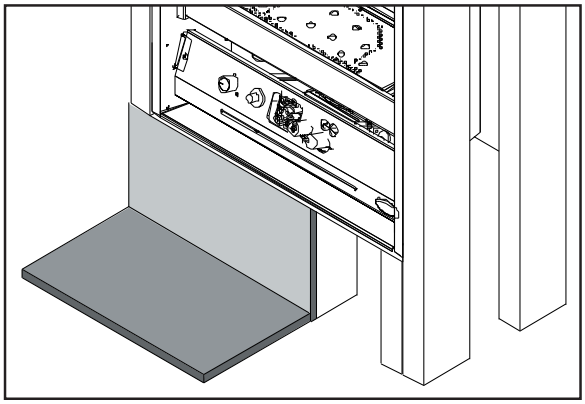

Figure 12. Raised Fireplace with Floor Level Hearth.

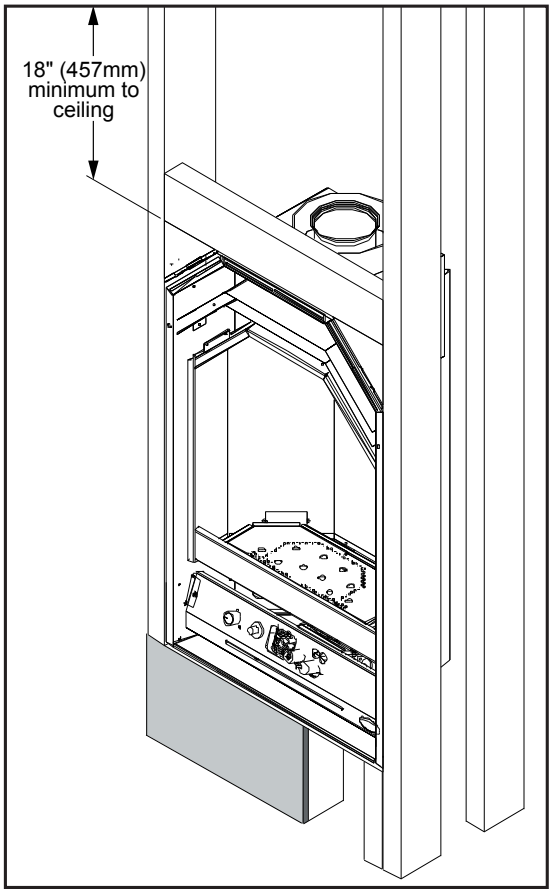

Figure 14. Raised Fireplace with No Hearth.

Framing Mount Brackets:

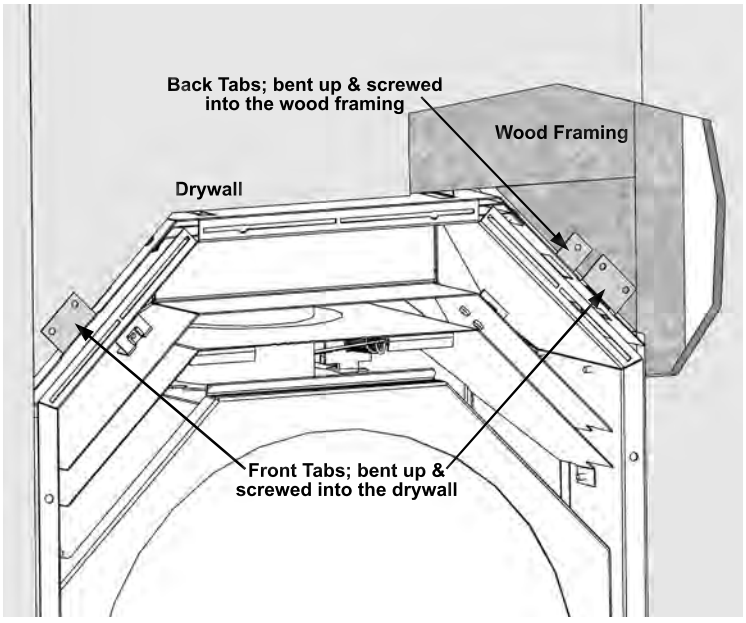

Figure 15. Top Mounting brackets.

The Haven can be secured to the framing and the flooring. At either side of the top there are two (2) brackets with holes for screws or nails (Figure 15); the back tabs are to mount to the wood framing and the front ones are to mount to the drywall. At the bottom there are two (2) mounting holes in the unit base below the firebox, which allows for screws or nails to mount to the floor (Figure 16).

Initial Installation

QUALIFIED INSTALLERS ONLY

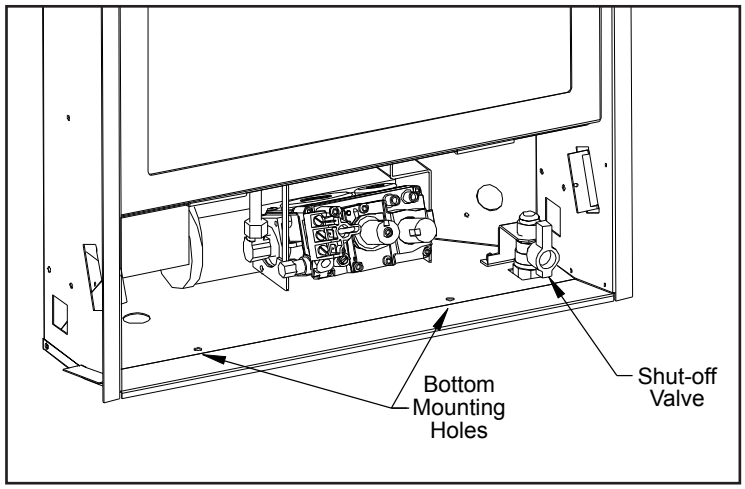

Figure 16. Bottom Mounting Holes.6

WALL FINISHES:

Any of the four (4) different haven faces will allow for up to a 1" (25mm) thick finishing wall (example drywall and tile); see Figure 17 & 18. The wall may be finished up to the fireplace standoffs with combustible materials. This facing style should tuck under the at the bottom of the front to conceal the top of the facing and the bottom of the Haven.

When finishing with brick, the brick must frame around the outside of the face (see Figure 19). See the corresponding fascia instruction sheet for approximate dimensions.

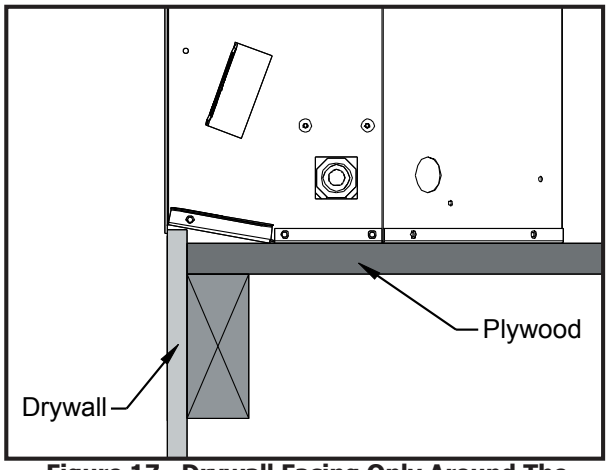

Figure 17. Drywall Facing Only Around The Haven.

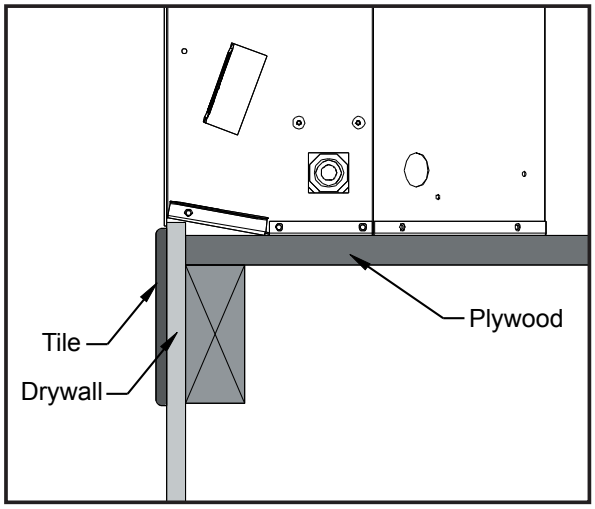

Figure 18. Drywall & Tile Facing Around The Haven.

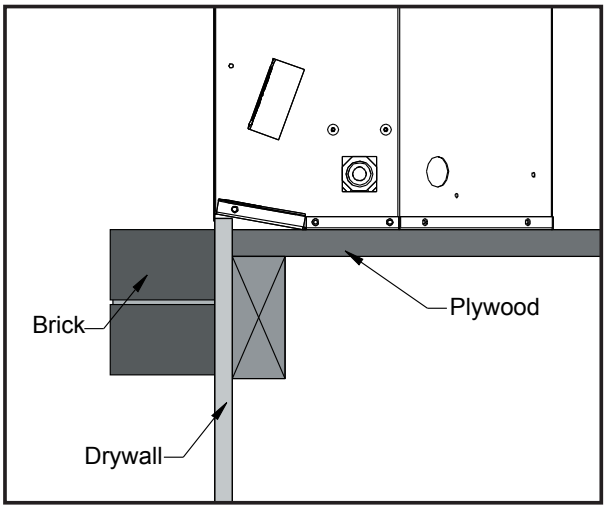

Figure 19. Drywall & Brick Facing Around The Haven.

Initial Installation

QUALIFIED INSTALLERS ONLY

Mantle Clearances:

It is not necessary to install a mantle, but if one is desired it is important to follow the guidelines.

Top of unit to horizontal framing:	0″	(0 cm)
Top of unit to bottom of 3½″ (8.9 cm) mantle:	10¼″	(26 cm)
Top of unit to bottom of 10″ (25.4 cm) mantle:	11½″	(29.2 cm)

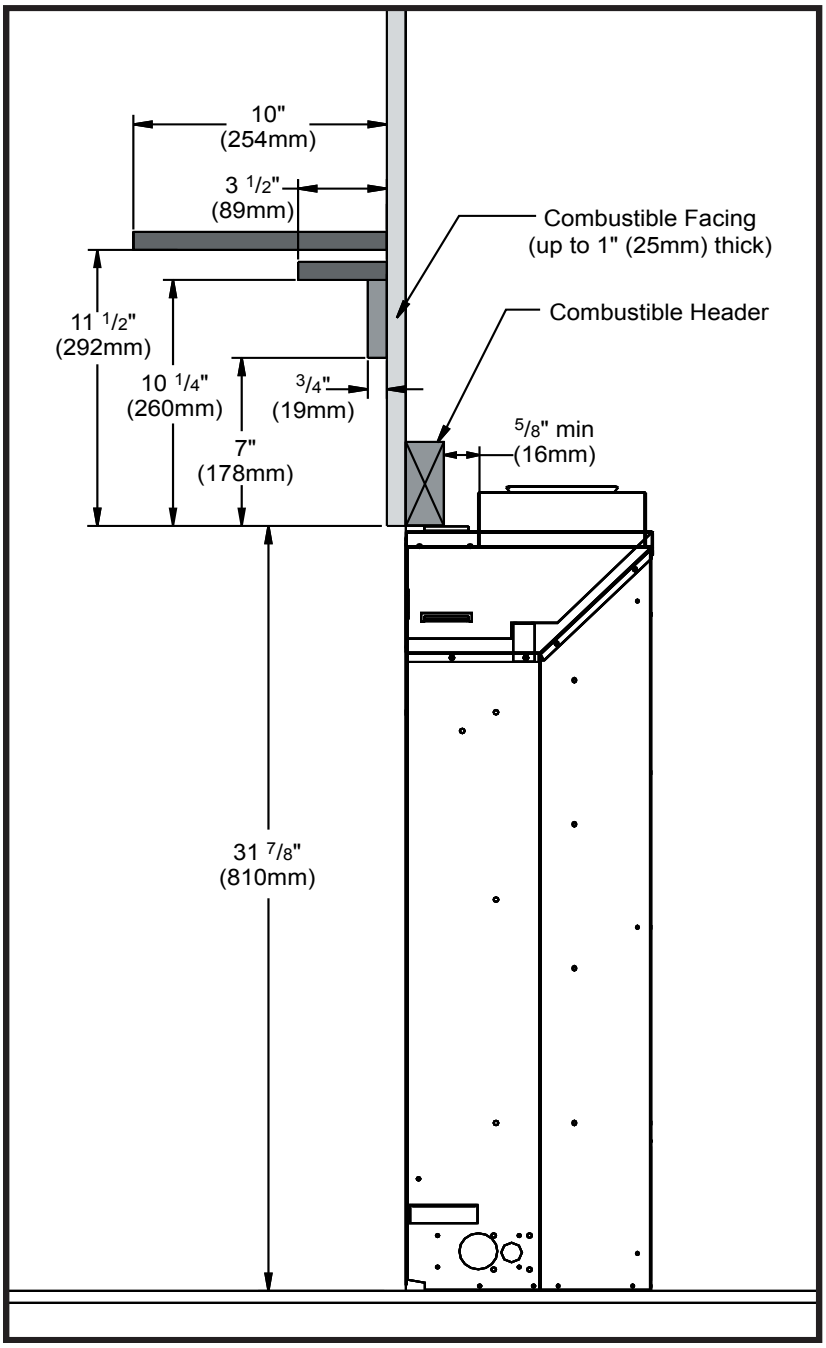

Figure 20. Combustible Mantle Clearances.

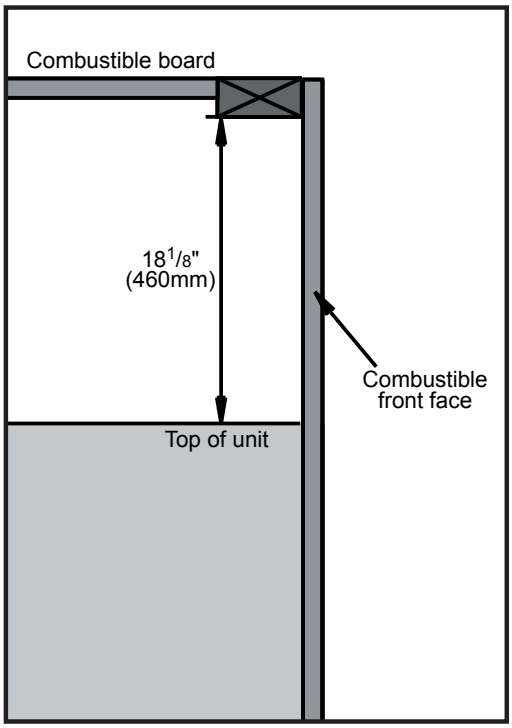

Figure 21. Combustible Shelf Clearance.

A shelf may be installed above the unit. We recommend that no heat sensitive items or components be placed on the shelf (see Figure 21).

Initial Installation

QUALIFIED INSTALLERS ONLY

Vent Termination Restrictions:

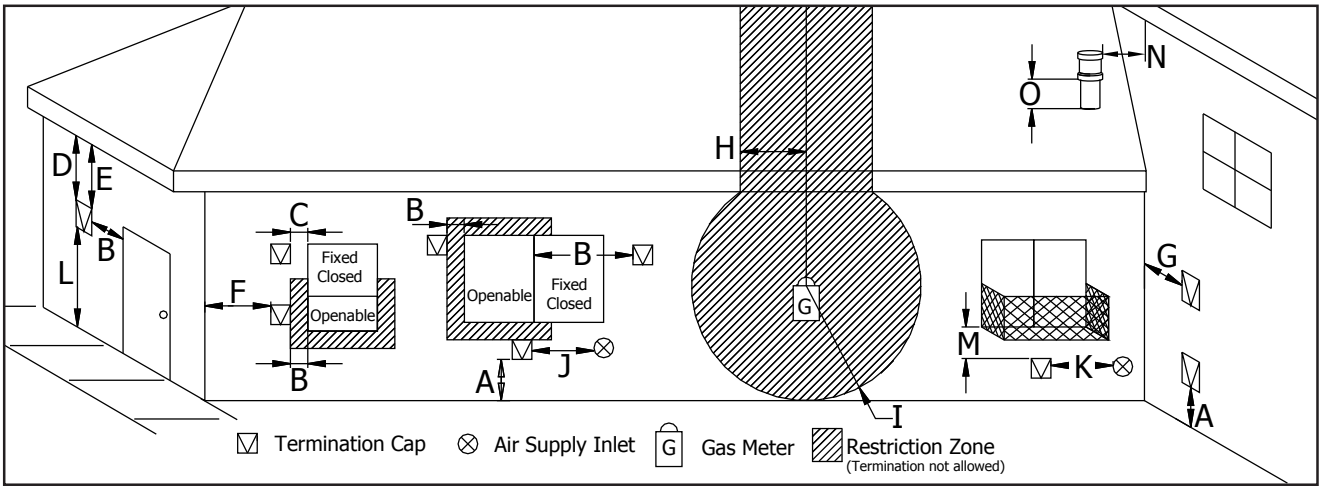

Figure 22. Vent Termination Restrictions, refer to Table 3.

Table 3: Vent termination clearances, refer to Figure 22.

Letter	Canadian Installation [1]	US Installation[2]	Description
A	12 in (30 cm)		Clearance above grade, verandah, porch, deck, or balcony.
B	12 in (30 cm)	9 in (23 cm)	Clearance from window or door that may be opened.
C	12 in (30 cm)*		Clearance from permanently closed window (to prevent condensation).
D	24 in (60 cm)*		Vertical clearance to ventilated soffit located above the terminal, within a horizontal distance of 2 ft (60 cm) from center line of terminal.
E	18 in (45 cm)*		Clearance to unventilated soffit.
F	12 in (30 cm)*		Clearance to outside corner.
G	12 in (30 cm)*		Clearance to inside corner.
H	3 ft (91 cm) within a height of 15 ft (4.5 m) above the meter/ regulator assembly	3 ft (91 cm) within a height of 15 ft (4.5 m) above the meter/ regulator assembly*	Clearance to each side of center line extended above meter/regulator assembly.
I	3 ft (91 cm)	3 ft (91 cm)*	Radial clearance around service regulator vent outlet.
J	12 in (30 cm)	9 in (23 cm)	Clearance to non-mechanical air supply inlet to building, or the combustion air inlet to any other appliance.
K	6 ft (1.83 m)	3 ft (91 cm) above if within 10 ft (3 m) horizontally	Clearance to mechanical air supply inlet.
L	7 ft (2.13 m)[t]	7 ft (2.13 m)*[t]	Clearance above paved sidewalk or paved driveway located on public property.
M	12 in / 30 cm[+]	12 in / 30 cm*[+]	Clearance under verandah, porch, deck, or balcony.
N	12 in (30 cm)*		Clearance horizontally to any surface (such as an exterior wall) for vertical terminations.
O	12 in (30 cm)		Clearance above roof line for vertical terminations.

[1] In accordance with the current CSA B149, Natural Gas and Propane Installation Code.
[2] In accordance with the current ANSI Z223.1 NFPA 54, National Fuel Gas Code.
* These numbers are only estimates. Clearance in accordance with installation codes and the requirements of the gas supplier.
[t] A vent shall not terminate directly above a side walk or paved driveway that is located between two single family dwellings and it serves both dwellings.
[+] Permitted only if verandah, porch, deck, or balcony is fully open on a minimum of two sides beneath the floor.

NOTE: Venting terminals shall not be recessed into walls or siding.

Initial Installation

QUALIFIED INSTALLERS ONLY

Fireplace Horizontal Vent Kit 50-1235:

Please read and understand these instructions before installing. Failure to follow these instructions carefully could cause property damage or personal injury.

KIT COMPONENTS:

Qnty	Description	Qnty	Description
1	Horizontal direct vent termination cap	4	Wire spacers
1	Flue collar adapter	1	4 oz tube Mill-Pac Sealant
1	Wall thimble	1	4 oz tube RTV silicone
1	5' (190 cm) length of Ø4" (10 cm) double walled flex pipe	12	9/16" tech screws
1	5' (190 cm) length of Ø6⅝" (10 cm) double walled flex pipe	8	1½" wood screws

Please ensure that all components are supplied with this kit. If components are missing or have been damaged, contact your dealer, distributor, or courier company. Do not attempt the installation if components are missing or damaged.

INSTALLATION INSTRUCTIONS:

1. Plan your installation and clearances to combustibles. Decide on a location for the unit that will meet any or all local code requirements. Refer to the sections in your owner's manual on where to locate your stove.
2. Set the appliance in the desired location. Determine if any wall studs, electrical wiring, or plumbing pipes are in the way of the venting system as it passes through the exterior wall. The fireplace location should be adjusted if obstructions are found in the wall.
3. Project a line from the center point of the flue outlet upward and outward to the desired flue outlet location on the exterior wall. Using this center point, scribe a 10" (25.4 cm) hole or square on the wall. Cut the hole out on both the interior and exterior wall surfaces.

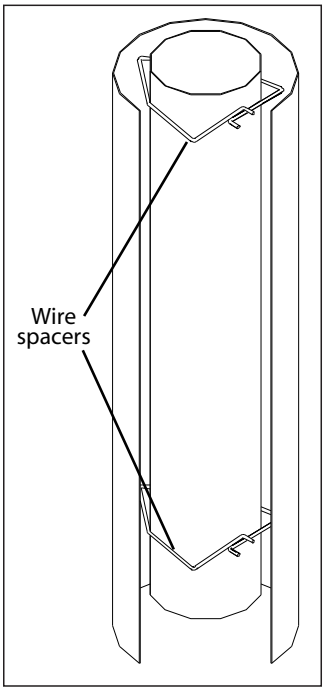

Figure 23: Wire Spacers.

4. Frame the hole as shown in Figure 27.
5. Trim the Wall Thimble to match the wall thickness as necessary. Install the wall thimble and secure it to the inner wall frame using four (4) 1½" wood screws.
6. Apply a bead of Mill-Pac Black sealant to the new Ø4" (10 cm) by 5" (12.5 cm) provided flue collar adaptor. Press the flue collar into the flue outlet of the fireplace so that the Mill-Pac seals the flue collar to the flue outlet.
7. Stretch both the Ø4" (10 cm) flex vent and the Ø6⅝" (16.25 cm) flex intake liner to the length needed to ensure the flex can be easily connected to the vent terminal.
8. Slide the Ø6⅝" (16.25 cm) flex intake liner over the flex vent. Install four (4) wire spacers around the flex pipe. Ensure the wire spacers are positioned at either end of the pipes, and at each end of any elbows in the liners (refer to Figure 23 and 24).

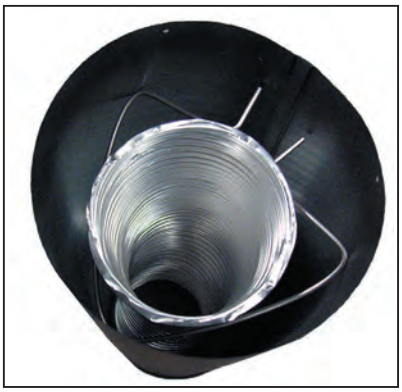
Figure 24: Wire Spacer in Place.

9. Install the flex pipe assembly through the wall thimble, ensure that this portion of pipe slides through the outside wall far enough to connect onto the vent termination cap.
10. Apply a bead of Mill-Pac Black sealant to the top section of the Ø4" (10 cm) by 5" (12.5 cm) flue collar adaptor previously installed into the fireplace flue outlet. Slide the Ø4" (10 cm) flex vent over the flue collar and secure with three (3) sheet metal screws evenly spaced.

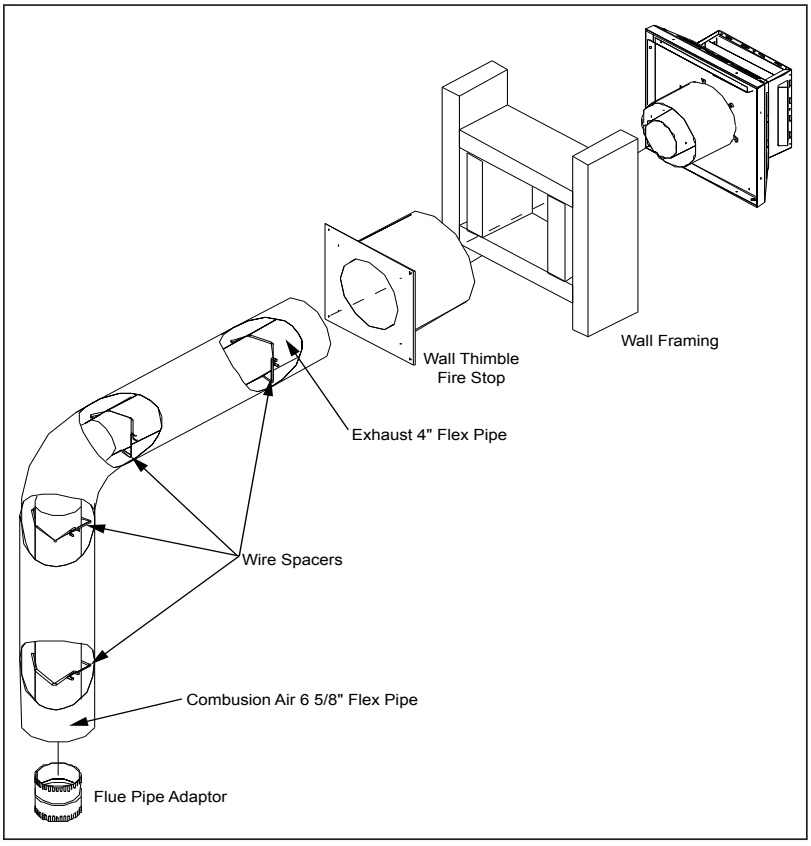

Figure 25: Installation of Fireplace Horizontal Vent Kit.

11. Place a bead of high temperature silicone on the intake collar of the fireplace, slide the Ø6⅝" (16.25 cm) flex intake liner over the collar, secure the flex liner with three (3) sheet metal screws evenly spaced.
12. On the outside of the exterior wall, apply a bead of Mill-Pac Black sealant to the Ø 4" (10 cm) pipe of the vent terminal. Slide the flex liner onto the vent terminal and secure with three (3) sheet metal screws evenly spaced.
13. Place a bead of high temperature silicone on the intake collar of the vent terminal, slide the Ø6⅝" (16.25 cm) flex intake liner over the collar, secure the flex liner with three (3) sheet metal screws evenly spaced.
14. Attach the vent terminal to the outside of the house using four (4) wood screws provided.
15. Light the appliance and ensure proper operation.

OTHER APPROVED VENT PARTS:

Table 4: Approved Vent Manufacturers

Manufacturer	Trade Name	Nominal Sizes
American Metal Products	Ameri Vent Direct	4/6 and 5/8
Security Chimneys International LTD	Secure Vent	4/6 and 5/8
Selkirk Metalbestos	Direct-Temp	4/6
Simpson Dura Vent	Direct Vent GS	4/6 and 5/8

The Haven fireplace has been tested and certified for use with SIMPSON DURAVENT TYPE GS PIPE FOR GAS STOVES. SECURITY CHIMNEY'S "SECURE VENT DIRECT VENT SYSTEM" and SELKIRK "METALBESTOS MDV VENT SYSTEM" kits are available for horizontal and vertical venting. When using Simpson Duravent, it is recommended that, before installation, a bead of RTV High Temperature Silicone should be applied to each outer vent joint, and Mil-Pac to each inner joint. When planning an installation, it will be necessary to select the proper length of vent pipe for the particular requirements.

Initial Installation

QUALIFIED INSTALLERS ONLY

WARNING: Do not mix parts from different vent manufacturers's systems.

EXCEPTION TO WARNING: This product has been evaluated by Intertek for using a Direct Vent GS starting collar in conjunction with Secure Vent, Direct-Temp, and Ameri Vent Direct venting systems. Use of these systems with the Direct Vent GS starting collar is deemed acceptable and does not affect the Intertek WH listing of the appliance.

Table 5: Vent part numbers (Must state if galvanized or black wanted, PART NUMBERS).

Direct Vent GS	Direct-Temp	Secure Vent	Ameri Vent Direct	Description
908	4DT-6	SV4L6		6" pipe length
			4D7	7" pipe length
907	4DT-9			9" pipe length
906	4DT-12	SV4L12	4D12	12" pipe length
904	4DT-24	SV4L24	4D2	24" pipe length
903	4DT-36	SV4L36	4D3	36" pipe length
902	4DT-48	SV4L48	4D4	48" pipe length
945	4DT-EL45	SV4EBR45	4D45B	45° elbow, black
990	4DT-EL90	SV4EBR90	4D90B	90° elbow, black
950	4DT-VS	SV4VS		Vinyl siding standoff/sheild
942	4DT-WT	SV4RSN	4DWT	Wall thimble
953	4DT-SC	SV4FC	4DSC	Storm collar
963	4DT-FS	SV4BF	4DFSP	Fire stop
988	4DT-WS/B	SV4BM	4DWS	Wall strap/support/band
970	4DT-HKA	SV0SHK	4DHTK1	Horizontal termination kit (SD: Basic Kit, SEL: Kit A, SC: Standard Kit)
911				11" to 14 5/8" pipe, adjustable
	4DT-AJ		4D12A	4" to 10" pipe , adjustable
		SV4LA12		1½" to 12" pipe , adjustable
943	4DT-AF6		4DF	Flashing, 0/12 to 6/12 roof pitch
943S	4DT-AF12		4DF12	Flashing, 7/12 to 12/12 roof pitch
		SV4FA		Flashing, 1/12 to 7/12 roof pitch
		SV4FB		Flashing, 8/12 to 12/12 roof pitch
943F		SV4F		Flat flashing
980	4DT-VC	SV4CGV	4DVC	Vertical termination
991	4DT-HVC			High wind vertical termination
984	4DT-HC	SV4CHC	4DHC	Horizontal square termination
985	4DT-HHC			High wind horizontal termination
978	4DT-VKC	SV0FAK	4DVTK	Vertical termination kit
971	4DT-HKB	SV0SHK2	4DHTK2	Horizontal termination kit (SD: Kit A, SEL: Kit B, SC: Kit)

Initial Installation

QUALIFIED INSTALLERS ONLY

VENTING:

This fireplace has been tested and certified for use with SIMPSON DURAVENT DIRECT VENT TYPE "GS" PIPE FOR GAS STOVES, SECURITY CHIMNEY'S SECURE VENT DIRECT VENT SYSTEM kits, and MDV SELKIRK METALBESTOS.

A 1" (25 mm) clearance to combustibles must be maintained around any vertical vent pipe. Around a horizontal vent pipe, the clearance to combustibles should be 2" (51 mm) above and 1½" (38 mm) on the sides and bottom. When combustible materials are directly above a 90° elbow, 3 inches (7.6 cm) of clearance are necessary (see Figure 26).

Table 6. Vent Pipe Minimum Clearances.

	Vertical Pipe to the Side Walls	Horizontal Pipe to the Sides & Bottom	Above an Elbow Above the Unit	Above an Elbow Not Above the Unit	Above Horizontal Vent Pipe	Wall Frame 8" (203mm) or less
Hard Pipe	1" (25.4 mm)	1½" (38.1 mm)	$7^{11}/_{16}$" (195mm)	3" (76.2 mm)	2" (51 mm)	10"x10" (25x25cm)
Flex Pipe	1" (25.4 mm)	1½" (38.1 mm)	$7^{11}/_{16}$" (195mm)	3 ⅜" (86 mm)	3 ⅜" (86 mm)	10"x10" (25x25cm)

A 10" (254 mm) x 10" (254 mm) frame (see Figure 27) will assure the proper support and spacing for the vent pipe as it passes through the wall. Installations in Canada require that a wall thimble be used for passing through walls and ceilings. All sealing and vapour barriers must comply with local building codes.

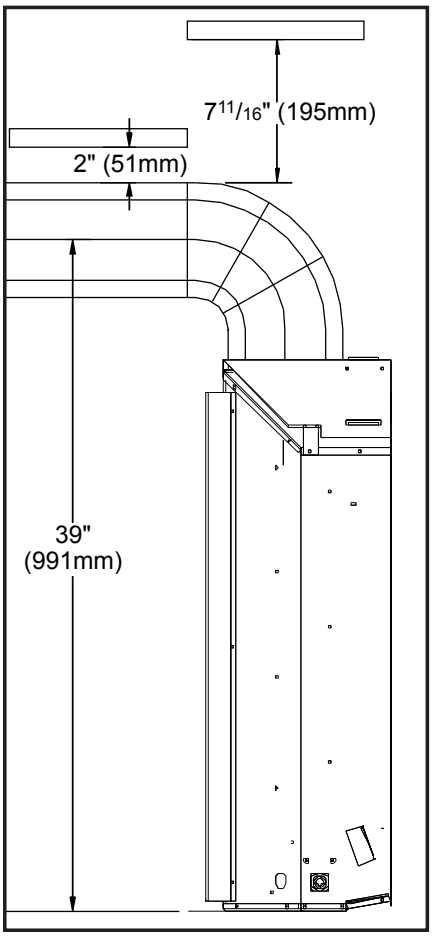

Figure 26. Vent Pipe Clearances.

When planning an installation, it is necessary to select the proper length of vent pipe for the particular requirements. The configuration of the venting pipes depends on the locations of walls, ceilings and studs. However, the pipes cannot be of arbitrary length and arrangement. Because the length of the vertical and horizontal sections dramatically affects the burning efficiency of the fireplace, certain guidelines have been set in INITIAL INSTALLATION - VENT CONFIGURATIONS AND RESTRICTOR SETTINGS.

Venting terminals can not be recessed into a wall or siding.

WARNING: This gas appliance must not be connected to a chimney flue serving a separate solid-burning appliances.

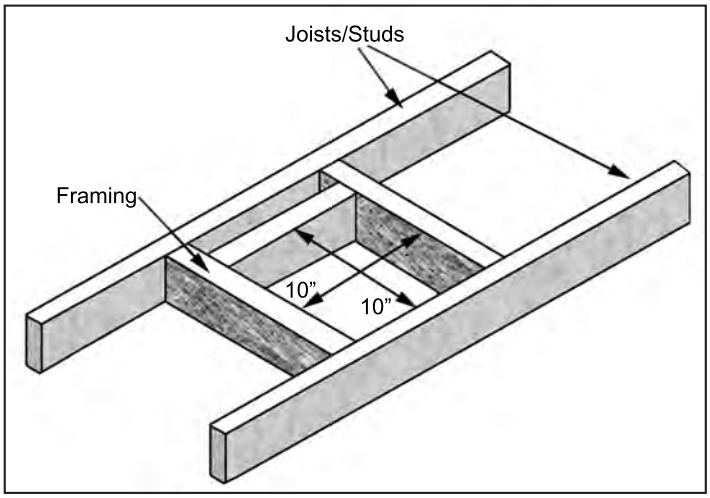

Figure 27. Vent Framing Through Wall/Ceiling.

Initial Installation

QUALIFIED INSTALLERS ONLY

Vent Configurations and Restrictor Settings:

Figures 23 shows the range of venting options, it shows possible vent configurations if the unit is top vented, for vertical and horizontal terminations, any layout that remains within the shaded area is acceptable. Having the fewest number of elbows is ideal, as they tend to disrupt air movement. Using 45˚ elbows is preferable to using 90˚ elbows. Also, a shorter vent system will perform better than a longer one.

The vent restrictor controls the amount of air moving through the vent pipe. Longer vertical vent lengths necessitate greater restriction; position 1 is open and position 5 is maximum restriction. Figure 28 shows the vent restrictor position required, relative to the length of vent pipe. The vent restrictor is located in the center of the fireplace, above the glass. Figure 29 shows the vent restrictor lever and the holes that indicate the different levels. To avoid injury, it is best to make this adjustment when the fireplace is cool or use welder's gloves or oven mitts.

Note: 0,0 in Figure 28 represents a 90˚ bend directly off the outlet of the unit, 39 inches (106 cm) from floor, in all horizontal instances **except** when using Selkirk and having less than a 4 feet (1.22 m) rise and 8 feet (2.44 m) horizontal offset. In this case, a 1 foot (30.5 cm) rise must be added below the 90˚ bend.

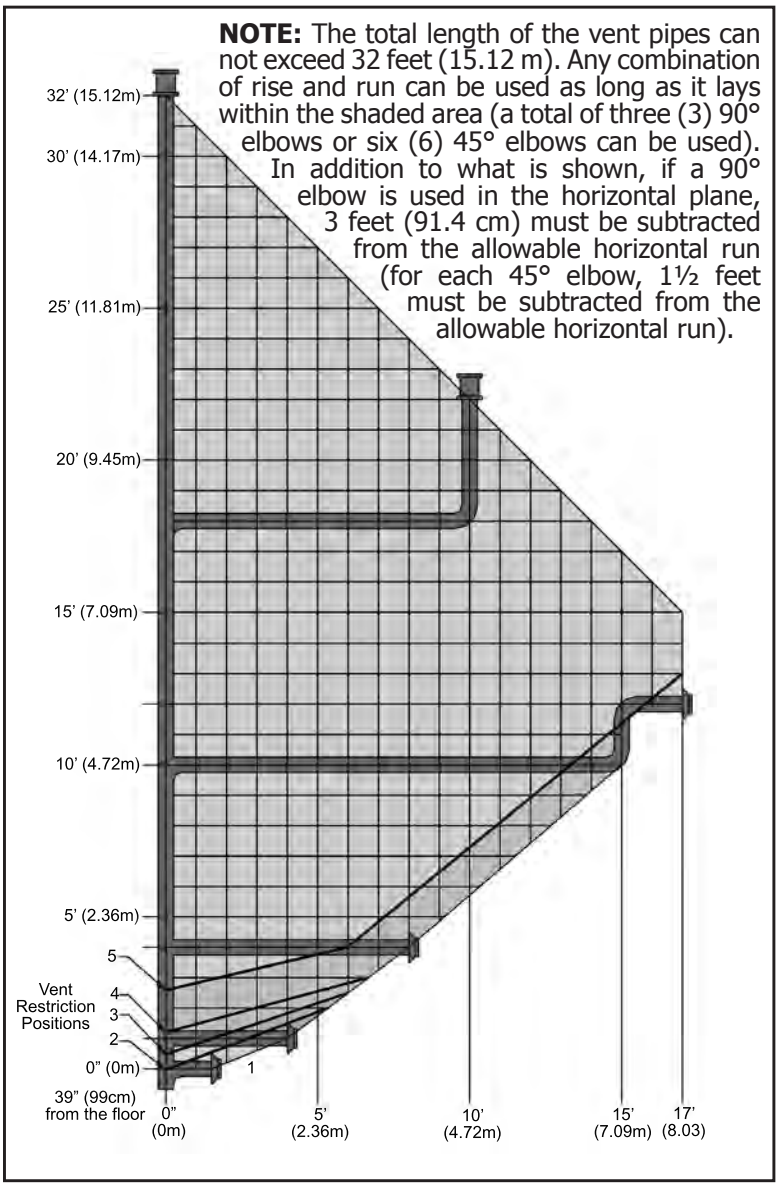

Figure 28. Possible Vent Configurations for Top Vented; Vertical and Horizontal Terminations.

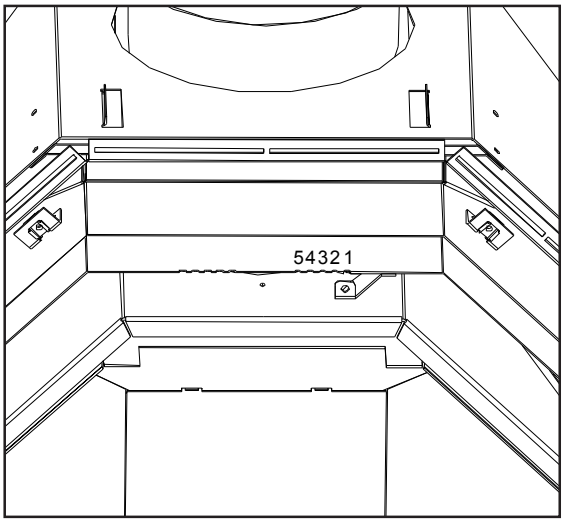

Figure 29. Possible Vent Restrictor Positions.

Initial Installation

QUALIFIED INSTALLERS ONLY

Horizontal Termination:

NOTES:

1. **Horizontal pipes must not be level. For every 12 inches (305 mm) of horizontal travel (away from the stove), there should be at least ¼ inch (6.4 mm) of vertical travel. Never allow the vent to run downward, as this could cause high temperatures or even present the possibility of a fire.**
2. The exterior of the horizontal vent termination must not be blocked or obstructed.
3. If the vent termination is not being attached to wood, the four wood screws provided should be replaced with material appropriate fasteners.
4. For buildings with vinyl siding, a vinyl standoff should be installed between the vent cap and the exterior wall. Attach the vinyl siding standoff to the horizontal termination. Note that the termination bolts onto the flat portion of the standoff, providing an air space between the wall and the vent termination. The air gap prevents excessive heat from possibly melting the vinyl siding.
5. Horizontal pipes must be supported every 3 feet (914 mm). Plumber's all round strap will suffice.

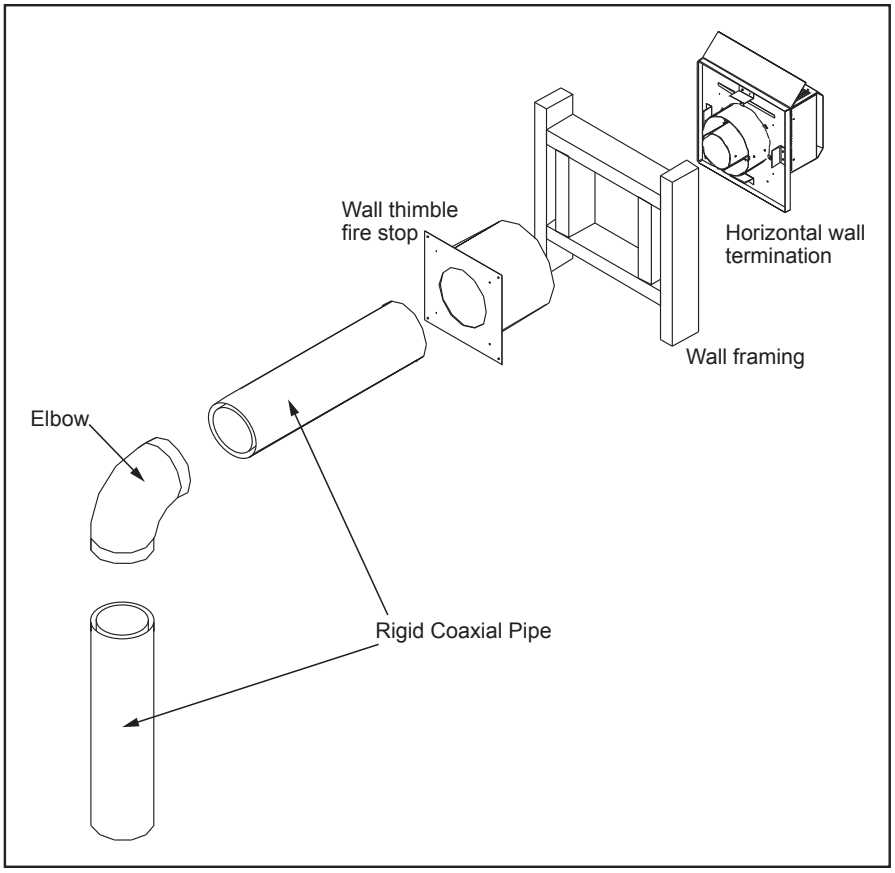

Figure 30. Horizontal Vent Termination

6. When running horizontal pipe, clearances to combustibles must be maintained 1½ inches (38 mm) sides, 1½ inches (38 mm) bottom, and 2 inches (51 mm) top.

Step 1. Set the fireplace in the desired location. Check to determine if wall studs will be in the way when the venting system is attached. If this is the case, the location of the fireplace may have to be adjusted or the venting may have to be offset.

Step 2. Direct vent pipe sections are designed with special twist-lock connections. Dry fit the desired combination of pipe and elbows to the appliance adaptor.

Step 3. With the pipe in the correct position and attached to the fireplace, mark the wall for a 10 inches (25.4 cm) x 10 inches (25.4 cm) square hole (see Figure 27). The center of the hole should match the center line of the horizontal pipe. Cut and frame the hole in the exterior wall where the vent will be terminated. If the wall being penetrated is made of a non-combustible material (i.e. masonry or concrete) a 7 inches (17.8 cm) hole is acceptable.

QUALIFIED INSTALLERS ONLY

NOTE: For Simpson Duravent only, place a bead of Mil-Pac or Rutland No 78 Stove and Gasket Cement on the outer edge of the inner exhaust pipe (non-flared end). Push the pipe sections together, then twist about ¼ turn, making sure the two sections are fully locked. Wrap all seams with foil ducting tape.

Step 4. With the hole now framed, the wall thimble installed, and the pipe extending into the wall, proceed to the outside. Attach the termination to the pipe using RTV and Mil-Pac or Rutland No 78 Stove and Gasket Cement to seal joints. The vent pipe must extend into the vent cap at least 1¼ inches (3.2 cm). Secure the connection between the vent cap and the pipe by attaching the two (2) sheet metal straps, which extend from the vent cap assembly to the outer wall of the vent pipe. Bend any remaining portion of the strap back towards the vent cap. Security Secure Vent uses a twist lock cap.

Step 5. Position the horizontal vent termination in the center of the 10 inches (25.4 cm) square hole and attach to the exterior wall with the four screws provided. The arrow on the vent termination should be pointing up. Run a bead of non-hardening mastic around the edges of the vent cap, to make a seal with the wall. Ensure the proper clearances to combustibles have been maintained.

VERTICAL TERMINATION:

Step 1. Check the instructions for required clearances (air spaces) to combustibles when passing through ceilings, walls, roofs, enclosures, attic rafters, or other nearby combustible surfaces. Do not pack air spaces with insulation.

Step 2. Set the gas appliance in the desired location. Drop a plumb bob down from the ceiling to the position of the appliance flue exit, and mark the location where the vent will penetrate the ceiling. Drill a small hole at this point. Next, drop a plumb bob from the roof to the hole previously drilled in the ceiling, mark the spot where the vent will penetrate the roof. Determine if ceiling joists, roof rafters, or other framing will obstruct the venting system. You may wish to relocate the appliance, or to offset, to avoid cutting load bearing members.

Step 3. To install the Round Support Box/Wall Thimble in a flat ceiling, cut a 10 inch (25.4 cm) square hole in the ceiling, centered in the hole drilled in Step 2. Frame the hole as shown in Figure 27.

Step 4. Assemble the desired lengths of black pipe and elbows necessary to reach from the appliance adapter up through the Round Support Box. Insure that all pipe and elbow connections are in their fully twist-locked position.

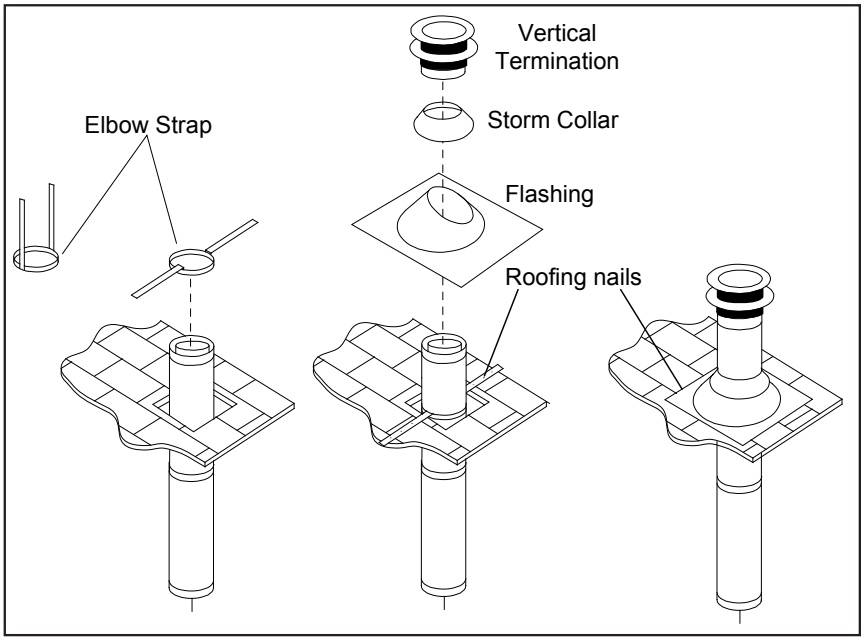

Figure 31. Vertical Vent Termination

STEP 5. Cut hole in the roof centered on the small hole placed in the roof from Step 2. The hole should be of sufficient size to meet minimum requirements for Clearance to Combustibles, as specified. Continue to assemble lengths of pipe and elbows necessary to reach from the ceiling support box up through the roof line. Galvanized pipe and elbows may be utilized in the attic, as well as above the roof line. The galvanized finish is desirable above the roof line, due to the higher corrosion resistance.

STEP 6. Once the pipe sections have been joined, and run up through the hole in the roof, slip an elbow strap over the exposed sections, bend the support straps outwards, and push the elbow strap down to the roof level, as shown in Figure 31. Tighten the clamp around the pipe section. Use a level to make sure the pipe is truly vertical. With roofing nails, secure the support straps to the roof. Seal the nails holes heads with non-hardening mastic. Trim the excess length of the support straps that extend out beyond the edge of the flashing.

STEP 7. Slip the flashing over the pipe section protruding through the roof. Secure the base of the flashing to the roof with roofing nails. Use a non-hardening sealant between the uphill edge of the flashing and the roof. Insure the roofing material overlaps the top edge of the flashing. Verify that you have at least the minimum clearance to combustibles at the roof line.

STEP 8. Continue to add pipe sections until the height of the vent cap meets the minimum code requirements. Refer to Figure 32 and Table 7. Note that for steep roof pitches, the vent height must be increased. In high wind conditions, nearby trees, adjoining roof lines, steep pitched roofs, and other similar factors can result in poor draft, or down drafting. In these cases, increasing the vent height may solve the problem.

STEP 9. Slip the storm collar over the pipe, and push it down to the top of the roof flashing as shown in Figure 31. Use the non-hardening sealant around the joint between the pipe and the storm collar.

STEP 10. Twist-lock the vent cap.

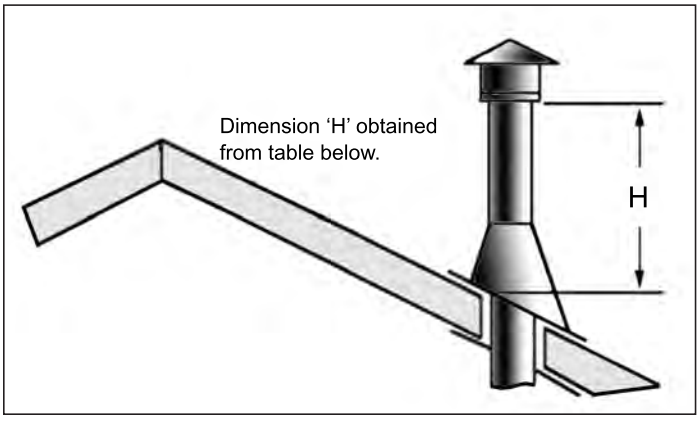

Figure 32: Height of Vertical Termination; Reference Table 7.

Table 7: Minimum 'H' for Figure 32.

Roof Pitch	Minimum Height (H)	
	Feet	Meters
Flat to 7/8	1	0.3
Over 7/12 to 8/12	1.5	0.46
Over 8/12 to 9/12	2	0.61
Over 9/12 to 10/12	2.5	0.76
Over 10/12 to 11/12	3.25	0.99
Over 11/12 to 12/12	4	1.22
Over 12/12 to 14/12	5	1.52
Over 14/12 to 16/12	6	1.83
Over 16/12 to 18/12	7	2.13
Over 18/12 to 20/12	7.5	2.29
Over 20/12 to 21/12	8	2.44

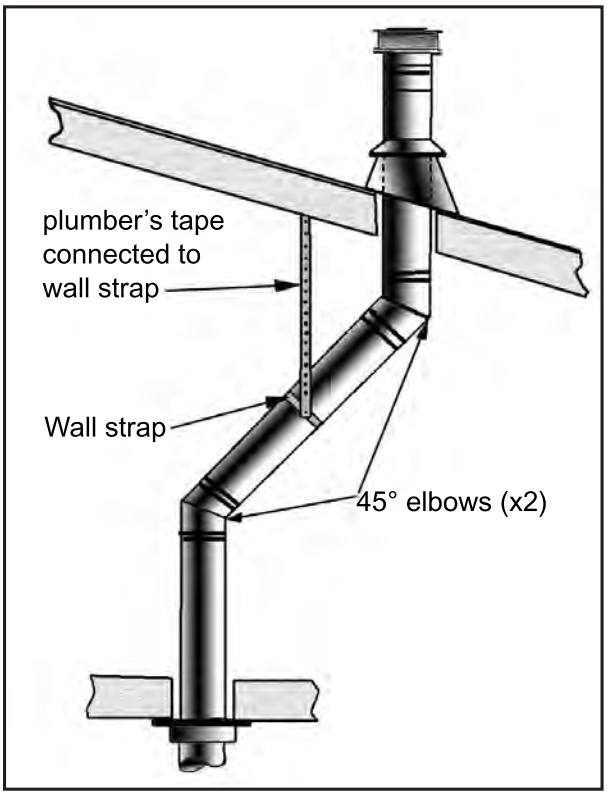

Figure 33: Use of Wall Straps.

(4) Any occupied areas above the first floor, including closets and storage spaces, which the vertical vent passes through, must be enclosed. The enclosure may be framed and sheet-rocked with standard building materials. However consult the appliance manufactures installation instructions for the minimum allowable clearance between the outside of the vent pipe, and the combustible surfaces of the enclosure. Do not fill any required air spaces with insulation.

NOTES:

(1) If an offset is necessary in the attic to avoid obstructions, it is important to support the vent pipe every 3 feet (914 mm), to avoid excessive stress on the elbows, and possible separation. Wall straps are available for this purpose (see Figure 33).

(2) When ever possible, use 45° degree elbows instead of 90° degree elbows. The 45° degree elbow offers less restriction to the flow of flue gases and intake air.

(3) For multi story installations; a ceiling firestop is required at the second floor, and any subsequent floors (see Figure 34). The opening should be framed to 10" (254 mm) x 10" (254 mm) inside dimensions, in the same manner as shown in Figure 27.

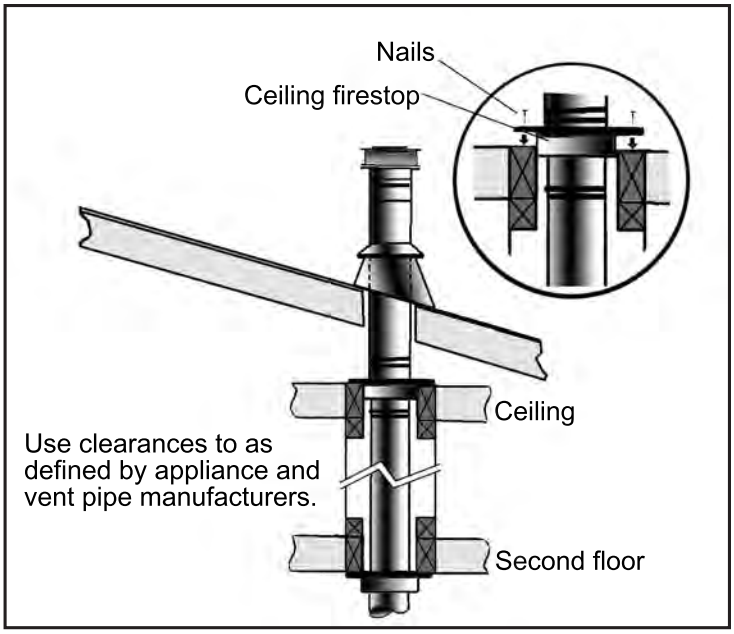

Figure 34: Multi-Story Vent Pipe Installation.

Initial Installation

QUALIFIED INSTALLERS ONLY

Electrical System For Thermostat:

CAUTION: Label all wires prior to disconnection when servicing controls. Wiring errors can cause improper and dangerous operation. Verify proper operation after servicing.

20ft (6.1m) of bell wire is included with this unit. Determine the desired location of the thermostat or wall switch (if used). Connect the bell wire to the valve as shown and run it to the desired location for the thermostat or wall switch and make the connection.

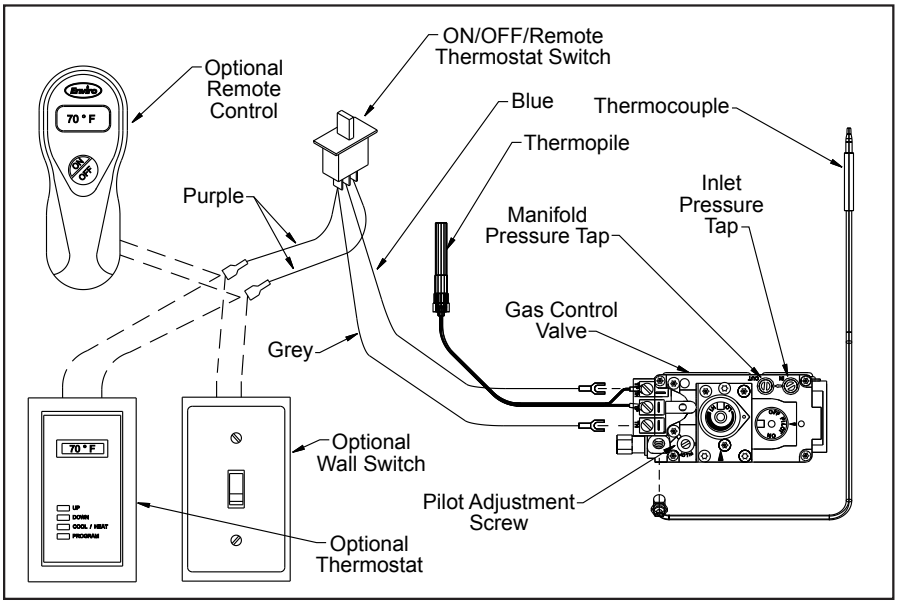

Figure 35. Wiring Diagram For Gas Valve.

Table 8. Recommended Thermostat Wire Size.

Wire Size	Max. Length
14 gauge	100 ft (30.48 m)
16 gauge	60 ft (18.29 m)
18 gauge	40 ft (12.00 m)
20 gauge	25 ft (7.62 m)
22 gauge	18 ft (5.49 m)

Installation Of Electrical Wiring For The Optional Fan Kit:

The electric 14/2 wire power cable must be hard wired to the bottom left (or right or bottom if the gas line is to come in on the left) of the unit if a fan is currently installed, or if you plan to install the Optional Fan Kit (50-1211) in the future.

Refer to local electrical bylaw for proper installation. In the absence of local codes, with the current CSA C22.1 Canadian Electrical Code Part 1, Safety Standards For Electrical Installations, or The Current National Electrical Code ANSI / NFPA 70 in the US.

Use a strain relief or cable clamp to attach the wiring to the unit.

WARNING: Ensure that the power is turned of to the lead from the source BEFORE conducting any wiring.

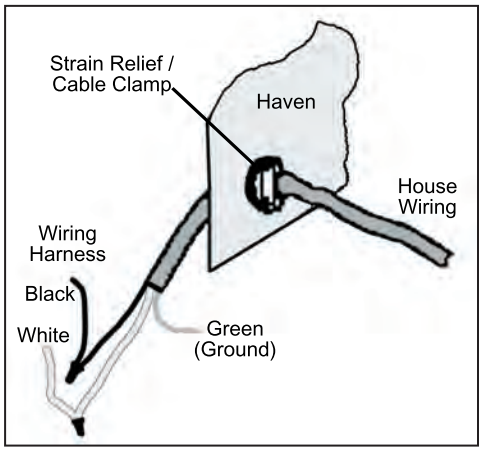

Figure 36. Install Electrical 14/2 Wire Power Cable Into Haven.

Initial Installation

Gas Line Connection and Testing:

WARNING: Only persons licensed to work with gas piping may make the necessary gas connections to this appliance.

GAS LINE CONNECTION

- This fireplace is equipped with a certified flexible pipe located on the right side of the unit. This flexline is connected to a shut-off ball valve, which terminates in a ⅜" female NPT fitting. The ball valve can be located on the right or left side of the unit, or where the gas supply can enter through the floor of the unit (see Figure 10). Consult your local authorities codes or the CAN/CGA B 149 (1 or 2) installation code in Canada, or in the USA gas installations follow either local codes or the current edition of the National Fuel Gas Code ANSI Z223.1.
- The efficiency rating of this appliance is a product thermal efficiency rating determined under continuous operating conditions and was determined independently of any installed system.

The appliance and its shutoff valves must be disconnected from the gas supply piping system during any pressure testing where the pressure exceeds ½ PSIG (3.45 KPa) or damage will occur to the valve.

The appliance must be isolated from the gas supply piping system by closing its individual manual shutoff valve during any pressure testing of the gas supply piping system at test pressures equal to or less than ½ psig (3.45 KPa).

Always check for gas leaks with a soap and water solution after completing the required pressure test.

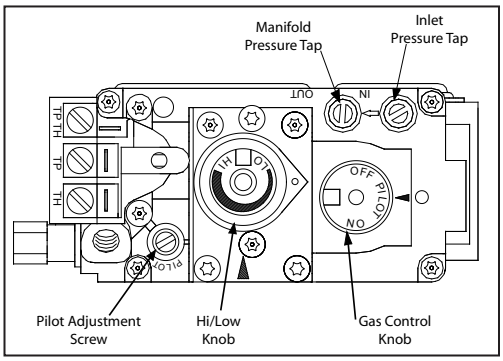

Figure 37: Fully Labeled Gas Valve.

TO TEST VALVE PRESSURES

The pressure taps are located on the top right of the valve shown in Figure 37.

- Turn set screw 1 turn counter clockwise to loosen,
- Place 5/16" (8 mm) I.D. hose over pressure tap system.
- Check pressures using a manometer.
- When finished, release pressure, remove hose & tighten set screw.

Table 9: Pressure and BTU Information.

	Natural Gas	Propane
Main Orifice	#48 DMS	#57 DMS
Manifold Pressure	3.8" W.C. (0.95 KPa)	11.0" W.C. (2.74 KPa)
Min. Manifold Pressure	1.2" W.C. (0.28 KPa)	2.7" W.C. (0.67 KPa)
Max Supply Pressure	7.0" W.C. (1.74 KPa)	13.0" W.C. (3.28 KPa)
Min. Supply Pressure	5.0" W.C. (1.25 KPa)	12.0" W.C. (2.98 KPa)
Max BTU/hr Input	16,900 BTU/hr (4.95 KW)	14,500 BTU/hr (4.25 KW)
Min. BTU/hr Input	10,000 BTU/hr (2.93 KW)	7,500 BTU/hr (2.20 KW)

NEVER USE AN OPEN FLAME FOR LEAK TESTING.

Secondary Installation

QUALIFIED INSTALLERS ONLY

Optional Fan Kit Installation:

If the Haven is installed the burner and valve assemblies must be removed. If the Haven is not installed the fan can be installed through an access hole at the lower rear of the unit.

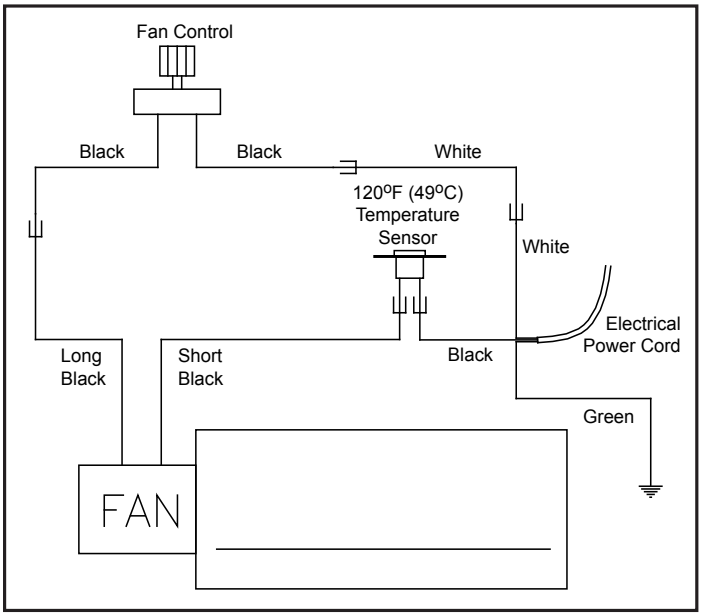

Figure 38. Wiring Diagram For Fan Control.

The optional fan is thermostatically controlled and it will not operate if the appliance is cold. A few minutes after the appliance is lit and the variable speed control is set at a desired setting, the fan will automatically turn on. The fan will automatically turn off a few minutes after the appliance is shut off.

The fireplace must be electrically connected and grounded in accordance with local codes or, in the absence of local codes, with the current CSA C22.1 Canadian Electrical Code Part 1, Safety Standards For Electrical Installations, or The National Electrical Code ANSI / NFPA 70 in the US.

WARNING: The electrical grounding instructions must be followed. The fan should be properly grounded.

CAUTION: When servicing controls, label all wires prior to disconnection. Wiring errors can cause improper and dangerous operation. Verify proper operation after servicing.

Kit Contents:

This kit includes a fan assembly, a wiring harness, a temperature sensor, fan control dial, two (2) grommets, and two (2) 8-32 x ¾" bolts.

Please ensure that your fan kit has not been damaged. If so, contact your dealer, distributor, or courier company before starting this installation.

Optional Fan Kit Installation Through Back of Haven:

1. Use a flat head screwdriver or a ¼" socket to remove the six (6) screws holding the back cover on (see Figure 39).
2. Remove the two (2) bottom screws holding the stand-off on (see Figure 40) and swing it out of the way.
3. Install the two (2) grommets; place a 8-32 x ¾" bolt through each grommet then attach the bolt to the back cover using a ¼" socket.
4. Ensure the wiring harness is attached to the fan then hook the two (2) slots on the fan box over the grommets installed in the last step.
5. Slide the fan with the wiring harness attached into the hole in the back of the haven, motor side first (see Figure 41).

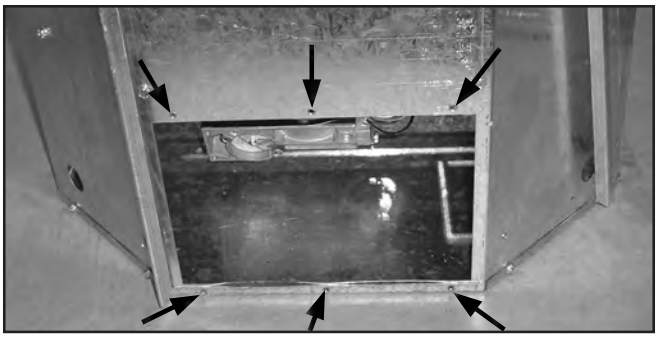

Figure 39: Removing Back Plate From Haven.

6. Re-install the screws for the back cover and the stand-off.
7. Remove the two (2) screws holding the control panel in place. Pull the panel out of the way.
8. Slide the snap switch in place under the holding tabs above the SIT valve (see Figure 42).
9. Remove knob and nut from the fan controller. Place the dial stud through the fan hole in the control board through the back to the front (see Figure 43). Tighten the nut on the front side to keep the fan controls in place (see Figure 44), then install the knob onto the stud.
10. Use marrettes to connect the fan wiring harness wires to the house wiring when the Haven is installed.
11. Re-install the control panel.

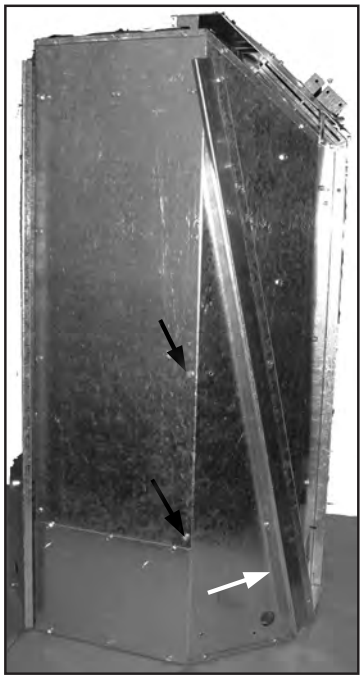

Figure 40: Move Back Stand-Off.



Figure 41: Installing Fan Through the Back.

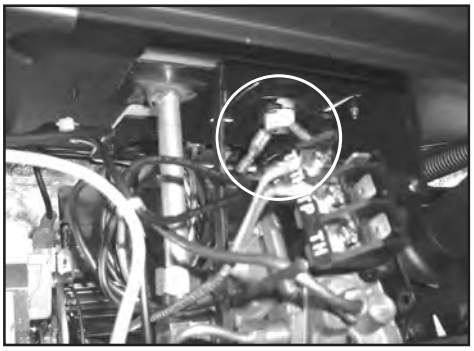

Figure 42: Installing Temperature Sensor.



Figure 43. Install Fan Control Box.



Figure 44. Install Fan Control Nut.

Optional Fan Kit Installation Through Front of Haven:

1. Ensure the appliance is turned off and cool.
2. Remove the fascia, glass door and, two (2) screws holding the control panel in place. Pull the panel out of the way.

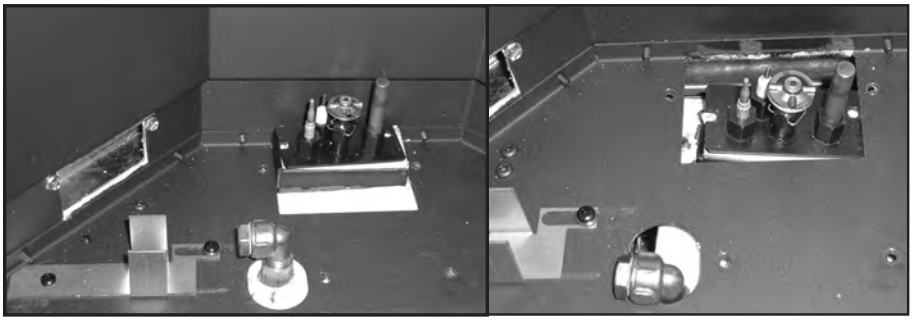

Figure 46. Remove the pilot shield, orifice and valve assembly.



Figure 45. Wing Nut to Remove the Burner.

3. Remove the burner by undoing the wing nut under the burner (see Figure 45).

4. Remove the pilot shield, orifice and valve assembly (see Figures 46).
5. Install the two (2) grommets; place a 8-32 x ¾" bolt through each grommet then attach the bolt to the back cover using a ¼" socket (see Figure 47)
6. Ensure the wiring harness is attached to the fan then hook the two (2) slots on the fan box over the grommets installed in the last step.

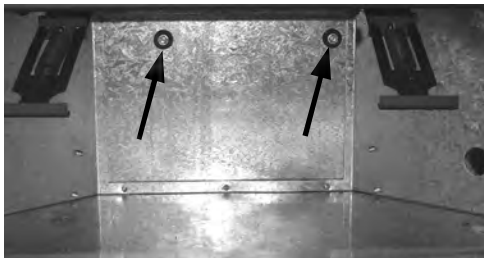

Figure 45. Grommets to Hang Fan Onto.

7. Re-install the pilot shield, orifice and valve assembly.
8. Slide the snap switch in place under the holding tabs above the SIT valve (see Figure 42).
9. Remove knob and nut from the fan controller. Place the dial stud through the fan hole in the control board through the back to the front (see Figure 43). Tighten the nut on the front side to keep the fan controls in place (see Figure 44), then install the knob onto the stud.
10. Use marrettes to connect the fan wiring harness wires to the house wiring.
11. Re-install the control panel.

Log Set and Ember Installation:

Install the ceramic or steel liner (refer to "Secondary Installation - Installation of Steel Firebox Liner or Optional Ceramic Firebox Liner") before installing the log set. A liner MUST be installed before the unit can be turned on. The placement of the charcoal pieces, embers, and logs are not arbitrary. If they are positioned incorrectly, the flames can be "pinched" and will not burn correctly. The burner comes with six (6) locator pins (pointed out in Figure 46), which make alignment easier. The locator pins are long enough to go through the charcoal and be used to locate for the logs. Carefully set the three (3) charcoal pieces (Figure 46) in place.

When the charcoal pieces are in place the embers (Figure 47) can be placed onto the burner to create a realistic look. A bag of rock wool is provided. Spread the rock wool in a sparse but even manner.



Figure 46. Charcoal Pieces Installation.

WARNINGS: DO NOT pack this ember material as this could create an unsafe condition. The pieces should be lightly placed so they don't block any of the burner ports. DO NOT allow any of the embers to rest against the pilot assembly.

Caution: Use only the type of ember material supplied with this fireplace. Due to the irregular size of the ember material, there may be more than required. Use of other foreign materials on the burners may create dangerous conditions.

NOTE: The charcoal pieces and logs are fragile and should be handled gently.

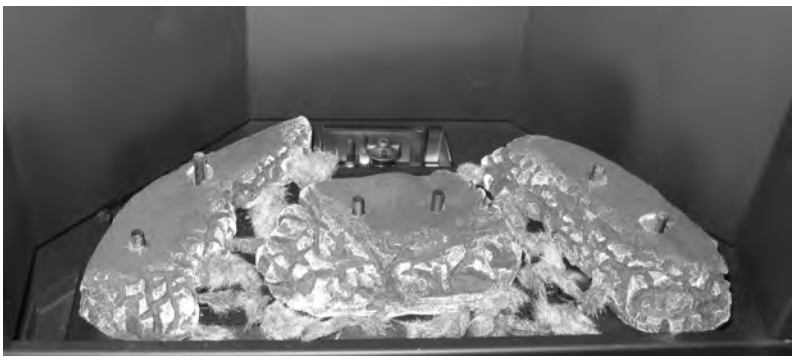

Figure 47. Ember Placement.

Secondary Installation



Figure 48. Left & Right Logs Installation.

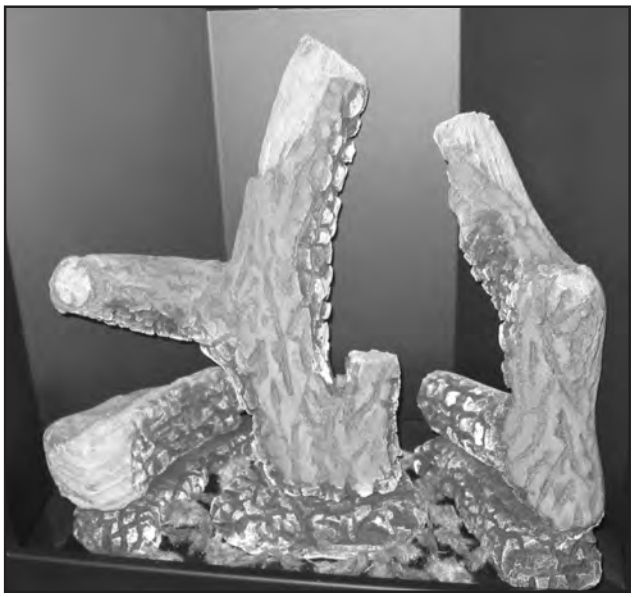

Figure 49. Centre Log Installation.

Each log sits on two (2) locator pins and may lean against the liner walls (see Figures 48 & 49).

Figure 50 shows The Haven burning with a good flame.

NOTE: While the glass is still removed, it is recommended that the gas line be purged by lighting the pilot.

When lighting the fireplace for the first time since the log set and embers have been installed/ replaced, watch for ignition at ALL the burner ports. If a long delay is noticed, turn the appliance off and wait for it to cool down. Then remove the glass and rearrange the ember material, making sure none of the burner ports are blocked.



Figure 50. Haven complete log set-up with embers burning.

Maintenance: Once a year, the charcoal pieces and logs should be removed and checked for deterioration or large amounts of soot. A small amount on the bottom side of the logs is normal. Remove and replace the logs in the same manner described above.

If new/more embers and rock wool are required, contact your nearest ENVIRO dealer.

Never operate the fireplace with the glass door removed.

Secondary Installation

Installation of Steel Firebox Liner or Optional Ceramic Firebox Liner:



Figure 51. Ceramic Liner Suport.

Turn off the gas control knob and allow the unit to cool.

NOTE: The ceramic liner is fragile and should be handled gently. Please ensure that it has not been damaged.

To Remove Liner:

Gentally pull the top of the liner forward then out.

To Install Liner:

1. Remove the glass door by following the instruction in the "Secondary Installation - Glass Door Removal" section and remove logs if necessary. Remove the burner by undoing the wing nut under the burner (see Figure 45). Remove the old steel liner.
2. Ceramic Liner Only: A ceramic liner support must be installed around burner (shown with a white outline in Figure 51).
3. Tilt the liner forward and slide the bottom into the firebox. Ensure that the liner goes over the pilot assembly.
4. Push the top of the liner into the top of the firebox; it will be a snug fit. Ceramic Liner Only: The bottom of the liner must rest on ceramic liner support installed in step 2. Steel Liner Only: The bottom of the liner must rest on the two (2) support behind the burner.
5. Once the liner is in the firebox pull it forward so it is flush with the front of the firebox.
6. Re-install the burner (if removed), the logs (refer to "Secondary Installation - Log Set and Ember Installation"), and the glass door.



Figure 52. Bottom of Steel Liner Slid In.

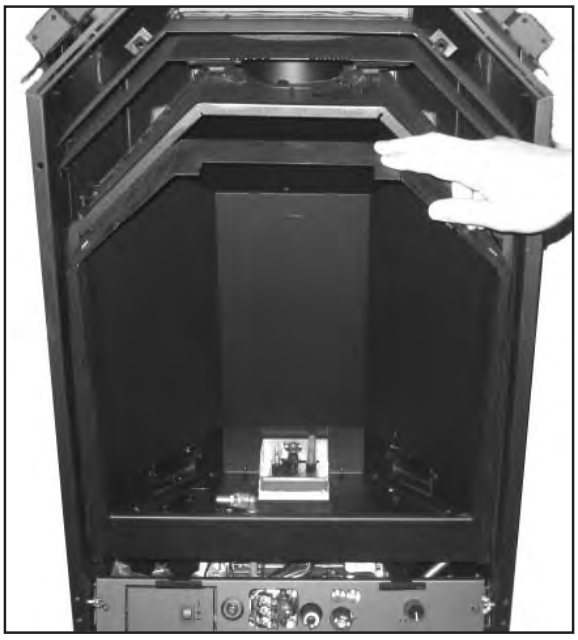

Figure 53. Bottom of Steel Line Put in Place.

Trouble Shooting

Problem	Possible Cause	Solution
Spark will not light the pilot after repeatedly pressing the spark ignitor	Defective piezo ignitor	• Check connections to ignitor. • If ignitor connections are good but no spark, replace ignitor.
	Broken spark electrode	• Check for broken ceramic insulation, replace electrode if broken.
	Misaligned spark electrode	• If spark is not arcing from electrode to pilot, loosen the screws on the pilot base adjust and tighten.
Pilot will not remain lit	Problem with thermocouple circuit	• Check for proper connection of the thermocouple to the rear of the valve. If loose, fully tighten. • Check pilot for full flame impingement around thermocouple. If flame is too small, check gas pressure, adjust pilot rate screw, check pilot head for damage. • Check thermocouple voltage at valve. It must be greater than 5 mV. If low, replace thermocouple.
	Air in gas line (pilot dies while knob is depressed)	• Bleed line. • Check gas line pressure. • Contact dealer.
Burners will not remain lit	Problem with thermopile circuit	• Check gas line pressure . • Check for flame impingement on thermopile. If low, see "Pilot will not remain lit". • Check thermopile for minimum of 300 mV when burner is switched on. • Check wiring to thermostat for breaks.
Flame lifting	Leak in vent pipe	• Check for leaks in vent connections.
	Improper vent configuration	• Check vent configuration with manual.
	Terminal may be recirculating flue gases	• Check to see if terminal is on correctly. • May need to install high wind termination cap. • Contact dealer.
Glass fogs up	Normal Condition: after the appliance warms up the glass will clear. **Due to additives in gas, glass may get hazy during operation** Clean as needed.	
Blue Flames	Normal during start up: flames will yellow as the fireplace heats up.	
Flames are burning "dirty" or sooting	Flame impingement	• Check log positioning. • Increase primary air by opening the venturi shutter and/or by opening the vent restrictor. See also "Burners will not remain lit."
Remote control doesn't work	Problem with the remote	• One or more of the batteries are dead. See remote control instructions.
	Problem with fireplace	• The on/off switch is turned to OFF. • The gas control valve is turned to PILOT or OFF. • The pilot has gone out.

Parts List - Components

Reference Number	Part Description	Part Number
1	120°F Ceramic Fan Temperature Sensor	EC-001
2	S.I.T. Nova Valve NG (50% turn down)	EC-006
2	S.I.T. Nova Valve LP (50% turn down)	EC-007
3	Thermocouple	EC-009
3	Spark Electrode with Ignitor Cable	EC-011
3	Thermopile	EC-012
3	Pilot Orifice NG Threaded	EC-019
3	Pilot Orifice LP Threaded	EC-020
3	Pilot Gasket	EC-021
4	S.I.T. Piezo Ignitor	EC-023
5	Fan Controller - 115V	EC-039
6	Convection Blower - 115V	EG22-001
6	Convection Blower Kit- 115V	50-1211
	SIT Pilot ⅛" Tube with End Furrels (1 piece)	30-043
7	Enviro Logo Gel Decal	50-322
	Blank Orifice #73	50-343
8	On/Off Remote Control Kit	50-559
	Programmable Wall Mounted Remote Control	50-583
9	Dual Bulb Door Gasket - 10 feet (3.05m)	50-634
9	Door, Glass, & Gasket	50-1289
	Wall Switch Kit	50-920
	Three Flame Pilot Hood	50-925
10	Haven Owner's Manual	50-1268
11	Conversion Kit from LP to NG	50-1280
11	Conversion Kit from NG to LP	50-1281
12	Log & Coal Set	50-1283
13	Manual Shut-Off Valve	50-1284
14	Door Latch Spring, Bracket, & Screws (set of 2)	50-1285
15	Pan Burner	50-1286
16	Pilot Shield	50-1287
17	Valve & Pilot Assembly	50-1288
18	Control Panel	50-1290
19	Bell Wire - 20 feet (6.1m)	50-1291

Parts List - Options

Referance Number	Part Description	Part Number
20	Firebox Liner - Bankers Brown Brick	50-1209
20	Firebox Liner - Arizona Stucco	50-1210
20	Firebox Liner - Red Brick	50-1225
21	Firebox Liner - Steel Black	50-1282
	Fireplace Horizontal Vent Kit - 5 Feet (1.52m)	50-1235
	Fireplace Horizontal Vent Kit - 10 Feet (3.05m)	50-1293
22	Roma Cast Iron Front - Painted Black	50-1196
22	Roma Cast Iron Front - Antique Chestnut	50-1197
22	Roma Cast Iron Front - Antique White	50-1232
22	Roma Cast Iron Front - Diamond Black	50-1233
23	Chalet Face & Inset - Enameled Black	50-1198
24	Chalet Insets - Brushed Gold	50-1200
24	Chalet Insets - Brushed Nickel	50-1201
25	Cape Cod Face - Enameled Black	50-1202
26	Cape Cod Inset - Enameled Black	50-1203
26	Cape Cod Inset - Brushed Gold	50-1204
26	Cape Cod Inset - Brushed Nickel	50-1205
27	Autumn Face - Enameled Black	50-1207
28	Autumn Inset - Enameled Black	50-1206
28	Autumn Inset - Brushed Nickel	50-1208
28	Autumn Inset - Brushed Gold	50-1238

Parts Diagram - Components

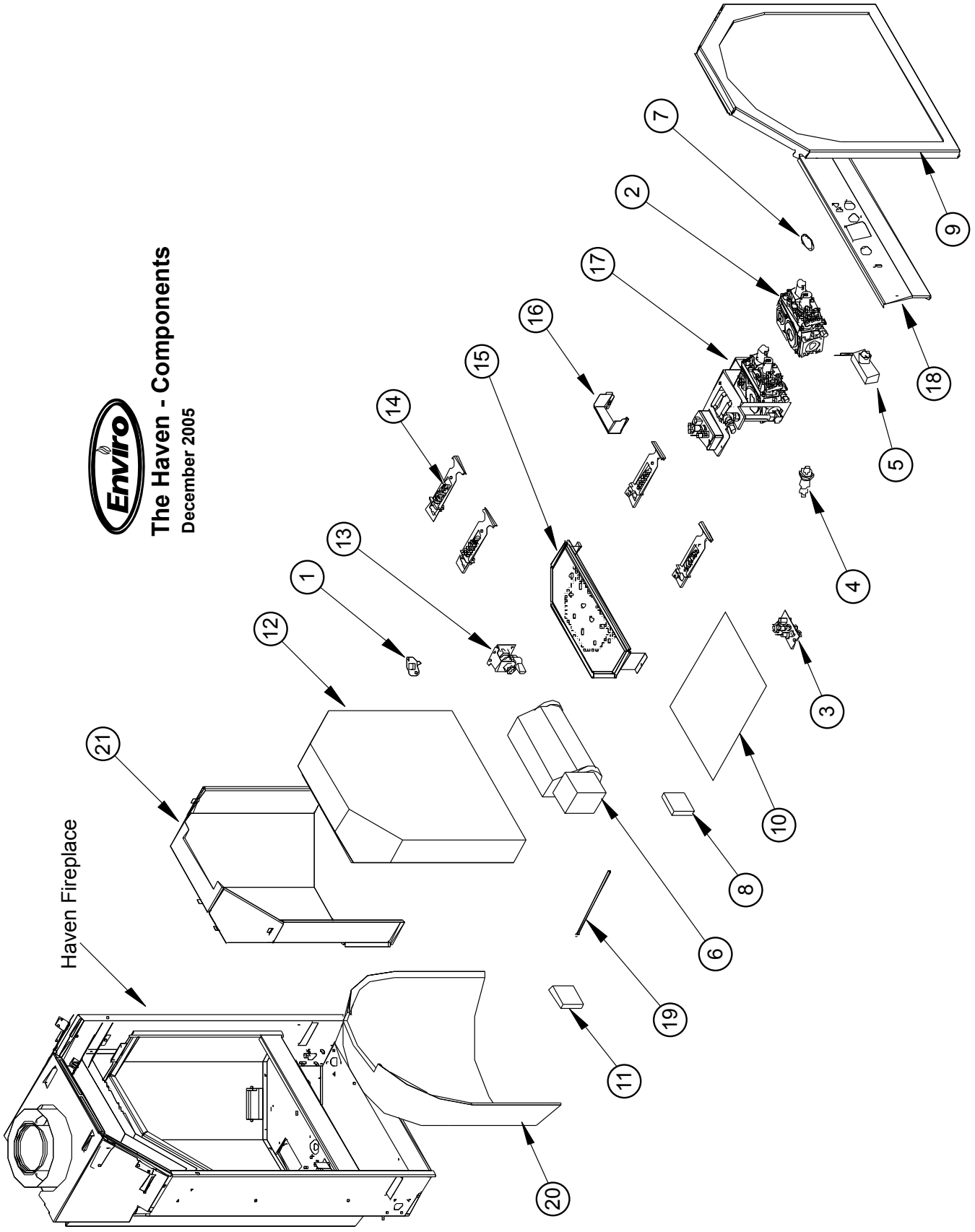

Parts Diagram - Fascia

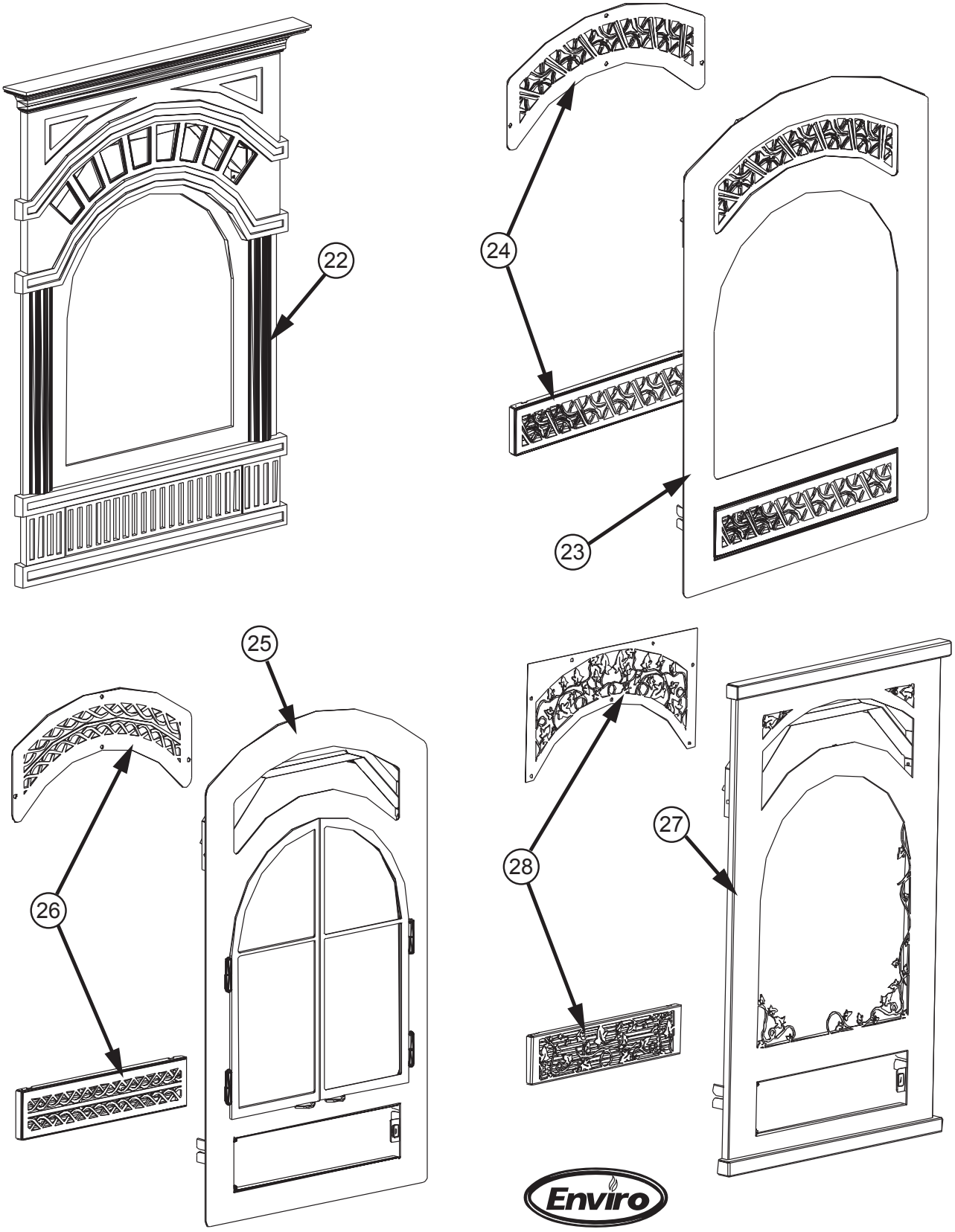

The Haven - Fascia

May 2005

Warranty

Sherwood Industries Ltd. offers a Limited Lifetime Warranty on this gas product. This Limited Lifetime Warranty covers the appliance for a period of seven years from the date of installation. This warranty applies only to the original owner in the original location.

Covered under the lifetime warranty are the chassis and the heat exchanger. These steel components are covered against manufacturer's defects for seven years and the labour for the first year. The following exclusions apply: over-firing due to incorrect setup or tampering, damage caused by incorrect installation, usage or abuse. The unit must be properly installed by a qualified technician or installer, and must meet all local and national gas and building code requirements.

Under the Limited Lifetime Warranty, the following components are also covered: log set, burners and glass. The following exclusions apply:

Plated Finish: Damage caused by scratching, marring, chemicals, fingerprints, abrasive cleaners or discoloration with age. Items with Antique Copper that have had a green discoloration of the finish. If discoloration occurs, please follow the cleaning instructions as outlined in the "Maintenance And Service" section.

Glass: Damage caused by the use of harsh or abrasive cleaners, striking the glass, surface contaminants

Log Set & Ceramic Liner: Damage caused by incorrect handling or misuse

Burners: Damage caused by improper or continuous operation under incorrect conditions

Sherwood Industries Ltd. offers a two-year warranty against manufacturing defects on all the electrical components and gas components, paint is also covered against flaking. This offer includes parts and labour for one year, and parts only thereafter.

Your dealer shall make all claims under this warranty in writing. **When filing a warranty claim please complete the following information on an official warranty claim form:**

TO THE DEALER:

Name, address and telephone number of purchaser and date of purchase, date of installation, name of installer and dealer, nature of complaint, defects or malfunction, description and part number of any parts replaced.

TO THE DISTRIBUTOR:

Sign and verify that work and information are correct.

This warranty covers defects in materials and workmanship only if the product has been installed according to the manual's instructions. If the product is damaged or broken as a result of misuse or mishandling, the warranty does not apply. The warranty does not cover removal and reinstallation costs.

Sherwood Industries Ltd. reserves the right to repair or replace the defective product. The shipping costs are to be paid by the consumer. All warranties by the manufacturer are set forth and no claim shall be made against the manufacturer on any oral warranty or representation.

Sherwood Industries Ltd. and its' employees or representatives will not assume any damages, either directly or indirectly, caused by improper usage, operation installation, servicing or maintenance of this appliance.

Sherwood Industries Ltd. reserves the right to make changes without notice. Please complete and mail the warranty registration card and have the installer fill in the installation data sheet in the back of the manual for warranty and future reference.

Installation Data Sheet

The following information must be recorded by the installer for warranty purposes and future reference.

NAME OF OWNER:

_____

ADDRESS:

_____

_____

_____

PHONE:_____

NAME OF DEALER:

_____

ADDRESS:

_____

_____

_____

PHONE:_____

MODEL:_____

SERIAL NUMBER:_____

DATE OF PURCHASE: _____ (dd/mm/yyyy)

DATE OF INSTALLATION:_____(dd/mm/yyyy)

☐ NATURAL GAS (NAT) ☐ PROPANE(LPG)

INLET GAS PRESSURE:_____in WC

MAIN BURNER ORIFICE:_____# DMS

PILOT ORIFICE #_____OR_____in diam.

INSTALLER'S SIGNATURE:

_____

NAME OF INSTALLER:

_____

ADDRESS:

_____

_____

_____

PHONE:_____

MANUFACTURED BY:
SHERWOOD INDUSTRIES LTD.
6782 OLDFIELD RD. SAANICHTON, BC, CANADA V8M 2A3
www.envirofire.biz
December 21, 2005
C-10987