SHERWOOD INDUSTRIES IS AN ENVIRONMENTALLY RESPONSIBLE COMPANY. THIS MANUAL IS PRINTED ON RECYCLED PAPER.

PLEASE KEEP THESE INSTRUCTIONS FOR FUTURE REFERENCE

Enviro

DV50DX

BY: SHERWOOD INDUSTRIES LTD

OWNER'S MANUAL

WHAT TO DO IF YOU SMELL GAS

- **Open windows/extinguish any open flame.**
- **Do not try to light any appliance.**
- **Do not touch any electrical switch or use any phone in your building.**
- **Immediately call your gas supplier from a neighbour's phone. Follow the gas supplier's instructions.**
- **If you cannot reach your gas supplier, call the fire department.**



FOR YOUR SAFETY
Do not store or use gasoline or other flammable vapours and liquids in the vicinity of this or any other appliance.

WARNING
If the information in this manual is not followed exactly, a fire or explosion may result causing property damage, personal injury or loss of life. Installation and service must be performed by a qualified installer, service agency or the gas supplier.

This appliance may be installed in an after-market permanently located, manufactured (mobile) home, where not prohibited by local codes.

This appliance is only for use with the type of gas indicated on the rating plate. This appliance is not convertible for use with other gases, unless a certified kit is used.

INTERTEK C CM Warnock Hersey US

Massachusetts installations (Warning): This product must be installed by a licensed plumber or gas fitter when installed within the Commonwealth of Massachusetts. Other Massachusetts code requirements: Flexible connector must not be longer than 36in., a shut off valve must be installed; only direct vent sealed combustion products are approved for bedrooms/bathrooms. A carbon monoxide detector is required in all rooms containing gas fired direct vent appliances.

Safety Precautions

FOR SAFE INSTALLATION AND OPERATION OF YOUR "ENVIRO" HEATER, PLEASE CAREFULLY READ THE FOLLOWING INFORMATION:

- All ENVIRO gas-fired appliances must be installed in accordance with their instructions. Carefully read all the instructions in this manual first. Consult the building authority having jurisdiction to determine the need for a permit prior to commencing the installation.
- **NOTE:** Failure to follow these instructions could cause a malfunction of the fireplace, which could result in death, serious bodily injury, and/or property damage.
- Failure to follow these instructions may also void your fire insurance and/or warranty.

GENERAL

- Installation and repair should be done by a qualified service person. The appliance should be inspected before the first use and, at least, annually by a qualified service person. More frequent cleaning may be required due to excessive lint from carpeting, bedding material, etc. It is imperative the control compartments, burners and circulating air passageways of the appliance be kept clean.
- Due to high temperatures, the appliance should be located out of high traffic areas and away from furniture and draperies.

Children and adults should be alerted to the hazards of high surface temperatures and should stay away to avoid burn or clothing ignition.

- Young children should be carefully supervised when in the same room as the appliance.
- Clothing or other flammable materials should not be placed on or near the appliance.

FOR YOUR SAFETY

- Installation and service must be performed by a qualified installer, service agency or gas supplier.
- This installation must conform to local codes or, in the absence of local codes, to the current CAN/CGA-B149 installation code (Canada) or National Fuel Gas Code ANSI Z223.1.2 (USA)
- To prevent injury, do not allow anyone who is unfamiliar with the stove to operate it.
- **To prevent injury, if the pilot or pilot and burners have gone out on their own, open the glass door and wait 5 minutes to air out before attempting to re-light the stove.**
- Always keep the area around these appliances clear of combustible material, gasoline and other flammable liquids and vapours.
- These appliances should not be used as a drying rack for clothing or for hanging Christmas stockings/ decorations.
- Due to the paint curing on the stove, a faint odor and slight smoking will likely be noticed when the stove is first used. Open a window until the smoking stops.

Always connect this gas stove to a vent system and vent to the outside of the building envelope. Never vent to another room or inside the building. Make sure the specified vent pipe is used, properly sized and of adequate height to provide sufficient draft. Inspect the venting system annually for blockage and signs of deterioration.

WARNING: Failure to position the parts in accordance with the diagrams in this booklet, or failure to use only parts specifically approved with this appliance, may result in property damage or personal injury.

WARNING: Do not operate with the glass front removed, cracked or broken. Replacement of the glass should be done by a licensed or qualified service person.

- Never use solid fuels such as wood, paper, cardboard, coal, or any flammable liquids, etc., in this appliance.
- Do not use this heater if any part has been under water. Immediately call a qualified service technician to inspect the heater and to replace any part of the control or gas control systems that have been under water.
- Do not abuse the glass by striking it or slamming the door shut.

Table of Contents

Safety Precautions....2
Table of Contents....3
Codes And Approvals....4
Specifications....5
- Dimensions:....5
- Rating Label Location:....5

Operating Instructions....6
- Pilot Lighting Instructions:....6
- Pilot Light:....7
- Venturi Adjustment:....7
- Air Diverter Control:....7
- Burner Lighting:....8
- Remote Controls:....8
- Blower Speed:....8
- Normal Sounds During Operation:....8

Maintenance And Service....9
- Routine Maintenance:....9
- Cleaning The Glass:....9
- Cleaning The Firebox:....9
- Replacing Glass:....9
- Cleaning Decorative Surfaces:....10
- Glass Door Removal:....10
- Burner and Fan Removal:....11
- Fuel Conversion:....12

Initial Installation....14
- Introduction....14
- Placement....14
- Corner Installation....15
- Raised Fireplaces and Hearths....15
- Fireplace Surround....16
- Mantle Clearances....17
- Vent Termination Restrictions....17
- Fireplace Horizontal Vent Kit 50-1235....18
- Other Approved Vent Parts....20
- Venting....22
- Vent Configurations and Restrictor Settings....23
- Horizontal Termination....24
- Vertical Termination....25
- Ducting....28
- Electrical Requirements....29
- Gas Line Connection and Testing....30

Secondary Installation....31
- Ceramic Brick Liner Removal....31
- Log Set and Ember Installation....31

Troubleshooting....35
Parts List - Components....36
Parts Diagram - Components....37
Parts List- Options....38
Parts Diagram - Options....39
Warranty....40
Installation Data Sheet....41

Codes And Approvals

DIRECT VENT ONLY: This type is identified by the prefix DV. This appliance draws all of its air for combustion from outside the dwelling, through a specially designed vent pipe system.

This appliance has been tested and approved for installations from 0 feet to 4500 feet (1372 m) above sea level.

In the USA: The appliance may be installed at higher altitudes. Please refer to your American Gas Association guidelines which state: the sea level rated input of Gas Designed Appliances installed at elevations above 2000 (610 m) feet is to be reduced 4% for each 1000 feet (305 m) above sea level. Refer also to local authorities or codes which have jurisdiction in your area regarding the de-rate guidelines.

In Canada: When the appliance is installed at elevations above 4500 feet (1372 m), the certified high altitude rating shall be reduced at the rate of 4% for each additional 1000 feet (305 m).

- This appliance has been tested by INTERTEK (**Warnock Hersey**) and found to comply with the established VENTED GAS FIREPLACE HEATER standards in CANADA and the USA as follows:

VENTED GAS FIREPLACE HEATER (DV50DX; NG/LPG)

TESTED TO: ANSI Z21.88a-2003/CSA 2.33a-2003 VENTED GAS FIREPLACE HEATERS

CAN/CGA 2.17-M91 GAS FIRED APPLIANCES FOR HIGH ALTITUDES

CSA P.4.1-02 TESTING METHOD FOR MEASURING ANNUAL FIREPLACE EFFICIENCY

This ENVIRO DV50DX Fireplace:

- Has been certified for use with either natural or propane gases. (See rating label.)
- Is not for use with solid fuels.
- Is approved for bedroom or bed sitting room. (**IN CANADA**: must be installed with a listed wall thermostat. **IN USA**: see current ANSI Z223.1 for installation instructions.)
- Must be installed in accordance with local codes. If none exist, use current installation code CAN/CGA B149 in Canada or ANSI Z223.1/NFPA 54 in the USA.
- Must be properly connected to an approved venting system and not connected to a chimney flue serving a separate solid-fuel burning appliance.

IMPORTANT NOTICE (Regarding first fire up): When the unit is turned on for the first time, it should be turned onto high without the fan on for the first 4 hours. This will cure the paint, logs, gasket material and other products used in the manufacturing process. It is advisable to open a window or door, as the unit will start to smoke and can irritate some people. After the unit has gone through the first burn, turn the unit off including the pilot, let the unit get cold then remove the glass door and clean it with a good gas fireplace glass cleaner, available at your local ENVIRO dealer.

NATIONAL FIREPLACE INSTITUTE®

NFI

CERTIFIED

www.nficertified.org

We recommend that our gas hearth products be installed and serviced by professionals who are certified in the U.S. by the National Fireplace Institute® (NFI) as NFI Gas Specialists.

Specifications

INSTALLATION OPTIONS:

- Parallel to a wall or placed in a corner
- Ducting to other rooms
- With a floor hearth or raised up the wall
- Vertical or horizontal venting

WARNING:

Operation of this heater when not connected to a properly installed and maintained venting system can result in carbon monoxide (CO) poisoning and possible death.

Dimensions:

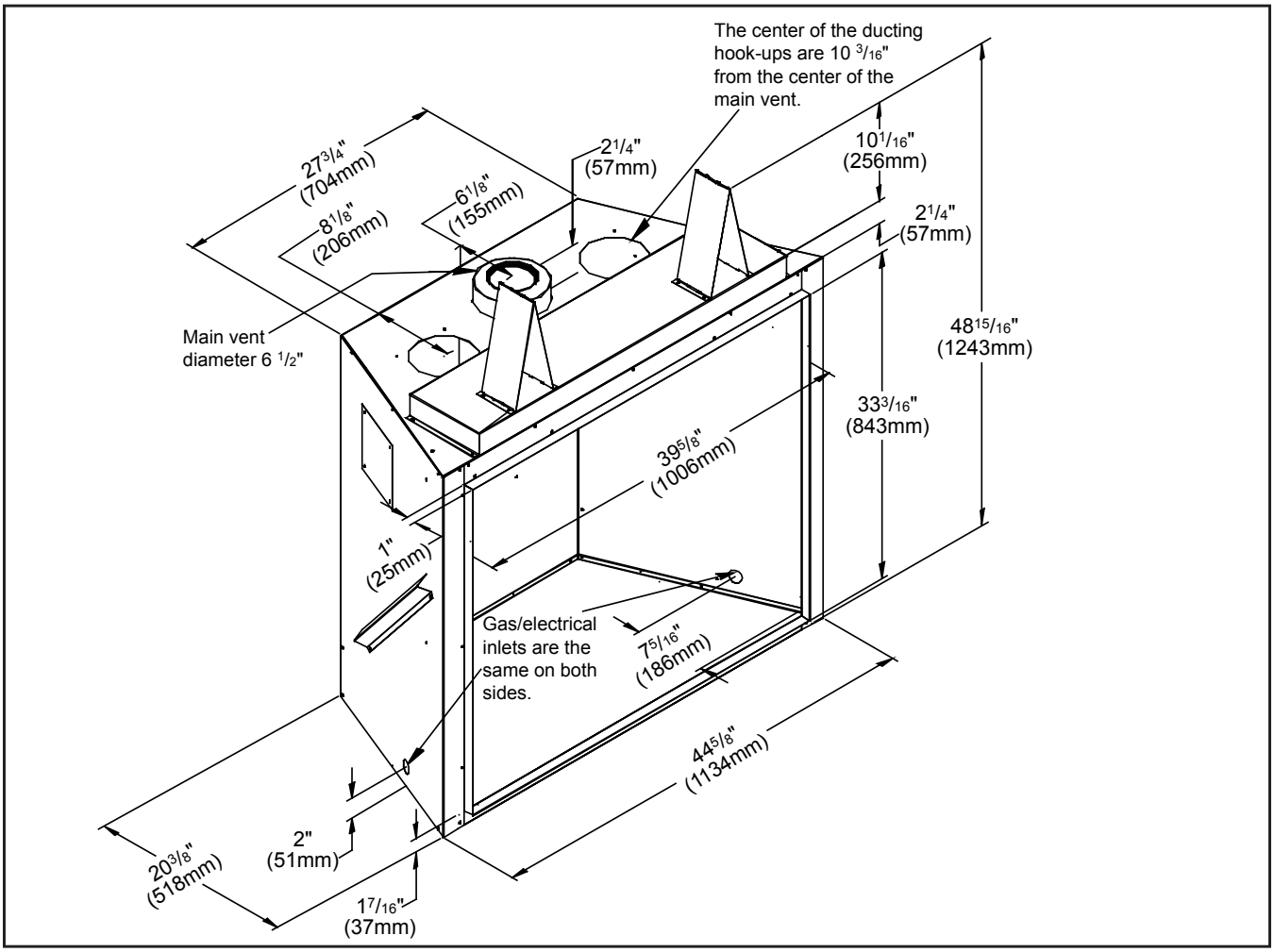

Figure 1. Dimensions of the Firebox.

Rating Label Location:

The rating label is located under the control panel and is attached to a rectangular metal sheet that is chained to the fireplace.

Operating Instructions

For Your Safety, Read Safety Precautions And Lighting Instructions Before Operating.

WARNING: IF YOU DO NOT FOLLOW THESE INSTRUCTIONS EXACTLY A FIRE OR EXPLOSION MAY RESULT, CAUSING PROPERTY DAMAGE, PERSONAL INJURY OF LOSS OF LIFE.

Pilot Lighting Instructions:

CAUTION: Hot while operating. Do not touch. Severe burns may result. Keep children, clothing, furniture, gasoline or other flammable vapors away.

CAUTION: Do not operate this fireplace with the glass removed, cracked or broken. Replacement of the panel(s) should be done by a licensed or qualified person! This appliance needs fresh air for safe operation and must be installed with provisions for combustion and ventilation air. See installation and operating instructions manual. Keep burner and control compartment clean.

WARNING: Improper installation, adjustment, alteration, service or maintenance can cause injury or property damage, or loss of life. Refer to owner's information manual provided with this appliance. For assistance or additional information consult a qualified installer, service agency or the gas supplier.

Keep burner and control compartment clean. See installation and operating instructions accompanying appliance.

FOR YOUR SAFETY READ BEFORE

WARNING: IF YOU DO NOT FOLLOW THESE INSTRUCTIONS EXACTLY, A FIRE OR EXPLOSION MAY RESULT CAUSING PROPERTY DAMAGE, PERSONAL INJURY OR LOSS OF LIFE.

A) This appliance is equipped with a pilot, which must be lit by hand by following these instructions exactly.

B) BEFORE LIGHTING smell all around the appliance area for gas and next to the floor because some gas is heavier than air and will settle on the floor.

WHAT TO DO IF YOU SMELL GAS:
Do not try to light any appliance. Do not touch any electrical switch: do not use any phone in your building. Immediately call your gas supplier from a neighbors' phone. Follow the gas suppliers instructions. If you cannot reach your gas supplier, call the fire department.

C) Use only your hand to push in or turn the gas control knob; NEVER use tools. If the knob will not push in or turn by hand, do not try to repair it. Call a qualified service technician. Force or attempted repair may result in a fire or explosion.

D) Do not use this appliance if any part has been under water. Immediately call a qualified service technician to inspect the appliance and to replace any part of the control system and any gas control which has been under water.

LIGHTING INSTRUCTIONS

1. STOP! Read the safety information above on this label.
2. Turn off all electrical power to this appliance.
3. Turn off the gas control knob clockwise ↷ to the off position.
4. Open door. Wait five (5) minutes to clear out any gas. Close door. If you smell gas STOP! Follow "B" in the above safety information. If you do not smell gas go to the next step.
5. Find pilot-located to the right behind the side log. Turn the gas control knob counter-clockwise ↶ to "PILOT". Push the gas control in fully and hold, Keep knob depressed for about 30 seconds after pilot is lit. Release knob. If pilot goes out, repeat steps 4 through 5.

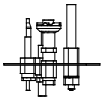

WARNING: this gas valve has a lockout device, which will not allow the pilot burner to be relit until the thermocouple has cooled. If the knob does not pop up when released, stop and immediately call your service technician or gas supplier.

If the pilot does not stay lit after several tries, turn the gas control knob to "OFF" and call your service technician or gas supplier.

6. Turn the gas control knob counter clockwise ↶ to the "ON" position. Flip the burner switch to "ON" THEN TURN THE "HI/LOW" knob to the desired setting.
7. Turn on the electrical power to the unit.

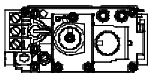

TO TURN OFF GAS TO APPLIANCE

1. Flip burner switch to "OFF"
2. Turn the gas control knob clockwise ↷ to the "OFF" position
3. Turn off all electrical power to the appliance if service is to be performed.

C-10078

Figure 2. Lighting instruction label.

Operating Instructions

Pilot Light:

1. Turn off the gas to the fireplace. **If not recently done, remove the glass and let the unit air out for at least five (5) minutes to clear out any gas.** Turn on gas to the heater. Leak test all joints with soapy water. **NEVER USE AN OPEN FLAME FOR LEAK TESTING.**
2. Start the pilot by pressing the gas control knob and turning it to PILOT. While holding the gas control knob in, press the piezo ignitor several times until the pilot light starts. Hold the gas control knob in for thirty (30) seconds. Check that the pilot has fully engulfed the thermocouple assembly (see Figure 3).
3. Start the main burner by turning the gas control knob to ON and then turn the rocker switch to ON. Check that all burner ports have flame.
4. Leak test all gas joints again.

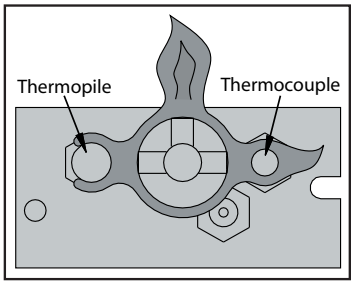

Figure 3. Pilot flame.

Venturi Adjustment:

The venturi adjustment lever is centered above the control panel.

The venturi allows the amount of air coming into the fireplace to be adjusted in order to accommodate different climates and venting arrangements. Start the pilot and then the burner. Make sure the pilot flame is burning normally and none of the burner ports are plugged. Let the fireplace burn for roughly fifteen (15) minutes and then examine the flames.



Figure 4. Venturi Adjustment Lever

The ideal flame will be blue at the base and light orange above (see Figure 50). The flames should be of medium height. If the flames look like this, no venturi adjustment is needed. If the flames are fairly short and mostly blue, the fireplace is getting too much air. Therefore, the air shutter should be closed (push in) slightly until the correct flames are achieved. Flames that are very orange, with tall dark stringy tips are not getting enough air. Open (pull out) the venturi until the flames clean up. If the venturi is opened, then closed all the way, and the correct flames cannot be attained, turn off the gas and contact the dealer.

Warning: Incorrect venturi adjustment may lead to improper combustion, which is a safety hazard. Contact the dealer if there is any concern about the venturi adjustment.

NEVER USE AN OPEN FLAME FOR LEAK TESTING

Air Diverter Control:

When the blower is on, the amount of air flow into the room can be adjusted with the air diverter. When the lever is to the far left the room receives the air, when the lever is to the far right the air goes out the duct and when the lever in the middle the air goes to both the duct and the room. Lever is found above the right end of the control panel, see Figure 5.



Figure 5. Air Diverter

Operating Instructions

Burner Lighting:

A) Make sure the pilot is lit.
B) Turn gas control knob COUNTER CLOCKWISE to ON.
C) Flip the burner switch to ON.
D) Turn HI/LO knob to the desired flame height.
E) Turn on all electrical power to the unit.

NOTE: Check that all burner holes are lit.

TO TURN GAS FIREPLACE OFF

Flip switch to OFF to turn off burners only.

If the fireplace is to be turned off for the season, or for servicing, turn the gas shut off valve to OFF. DO NOT FORCE IT. If the unit is going to be serviced, turn off the electrical power to the unit as well.



Figure 6. Control Panel

NOTE: When the unit is turned on for the first time, it should be turned onto high, with the fan OFF, for the first four (4) hours. This will cure the paint, logs, gasket material, and other products used in the manufacturing process. It is advised that a door or window be opened as the unit will start to smoke, which can irritate some people. After the unit has gone through the first burn, turn the unit OFF, including the pilot, and let the unit get completely cold. Then remove the glass and clean it with a good gas fireplace glass cleaner, available at your local Enviro dealer. See Maintenance And Service - Cleaning The Glass and Maintenance And Service - Glass Door Removal.

Remote Controls:

This fireplace can use an optional remote control or an optional cordless wall thermostat. If either of these are to be used to control the fireplace for the majority of the time, leave the ON/OFF switch (on the control panel) in the remote/thermostat position. Consult the instructions included with the remote/wall thermostat for operation guidelines.

Blower Speed:

The blower will come on only when the fireplace is up to temperature (approximately 20 minutes). The speed of the fan can be changed by turning the fan control knob. To turn the blower off, turn the knob COUNTER CLOCKWISE until it "clicks" off (Figure 7).

It is advisable not to operate the blower below 1/3 speed as it puts a strain on the windings of the blower and running the blower at lower speeds could also cause premature fan failure.

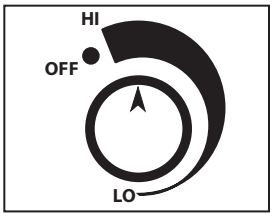

Figure 7. Fan Control

Normal Sounds During Operation:

Table 1: Normal Sounds

Component	Sound & Reason
DV50DX & Fascia	Creaking when heating up or cooling down.
Burner	Light pop or poof when turned off; this is more common with LP units.
Temperature Sensor	Clinking when it senses to turn the blower on or off.
Pilot Flame	Quiet whisper while the pilot flame in on.
Blower / Fan	Air movement that increase and decreases with the speed of the blower. The blower is pushing the heat from the fireplace into the room.
Gas Control Valve	Dull click when turning on or off, this is the valve opening and closing.

Maintenance And Service

Routine Maintenance:

At least once a year, run through the following procedures to ensure the system is clean and working properly. Check the burner to see if all the ports are clear and clean. Check the pilot to make sure it is not blocked by anything. The pilot flame should be blue with little or no yellow on the tips.

Warning: Clearances must be sufficient to allow access for maintenance and service

Warning: Failure to position the parts in accordance with this manual, or failure to use only parts specifically approved with this appliance may result in property damage or personal injury.

The venting system must be periodically examined; it is recommended the examination is done by a qualified agency.

Cleaning The Glass:

When the fireplace has cooled, remove the face of the fireplace along with the glass. See Maintenance And Service - Glass Door Removal. Check the gasket material on the back of the glass, making sure that it is attached and intact.

During a cold start up, condensation will sometimes form on the glass. This is a normal condition with all fireplaces. However, this condensation can allow dust and lint to cling to the glass surface. Initial paint curing of the appliance can leave a slight film behind the glass, a temporary problem. The glass will need cleaning about two weeks after installation. **Use a mild glass cleaner and a soft cloth**; **abrasive cleaners will damage the glass and plated surfaces.** Depending on the amount of use, the glass should require cleaning no more than two or three times a season. **Do not clean the glass when it is hot.**

Cleaning The Firebox:

Remove the logs carefully, as they are very fragile. Gently remove all the embers and rock wool and place on a paper towel. Vacuum the bottom of the firebox thoroughly. Carefully clean any dust off the logs and remove any lint from the burner and pilot. At this time, inspect the burner pan for cracking or severe warping. If a problem is suspected, contact the dealer. Check the logs for deterioration or large amounts of soot; a small amount on the bottom side of the logs is normal. Replace the logs and embers as in the Log Set and Ember Installation section. If new/more embers and rock wool are required, contact your nearest ENVIRO dealer.

Replacing Glass:

The glass in the fireplace is a high temperature ceramic. If the glass is damaged in any way, a factory replacement is required (see Parts List - Components). Wear gloves when handling damaged glass door assembly to prevent personal injury. When the glass door assembly is being transported, it must be wrapped in newsprint and tape and/or a strong plastic bag. Do not operate with the glass front removed, cracked or broken. Removal and replacement of the glass from the door **must** be done by a licensed or qualified service person. **The glass must be purchased from an ENVIRO dealer. No substitute materials are allowed.**

Maintenance And Service

Cleaning Decorative Surfaces:

Painted and porcelain faces should be wiped with a damp cloth periodically. If a plated face has been purchased, it should be unpacked/unwrapped carefully to avoid getting anything on the surface of the finish, including cleaners, polish and finger prints. It is important to note that fingerprints and other marks can leave a permanent stain on plated finishes. **To avoid this, give the face a quick wipe with denatured alcohol on a soft cloth BEFORE lighting the fireplace.** Never clean the face when it is hot. Do not use other cleaners as they may leave a residue, which can become permanently etched into the surface.

If your fingers come into contact with the antique copper finish, the oils left as fingerprints on the copper can cause discoloration, which will eventually turn green in that area. You can clean the patina or discolored areas of the antique copper finish with "OO" 3M green sanding pads. These can be purchased from most hardware stores. On the areas with discoloration, use the sanding pads to sand in the same direction as the brushed finish, then blend the finish by feathering in the surrounding area. This refinishing procedure has been approved by the manufacturer and will not harm the finish. Please note: ANTIQUE COPPER IS THE ONLY FINISH THAT CAN BE SANDED, DO NOT SAND PEWTER, GOLD OR NICKEL FINISHES.

Glass Door Removal:

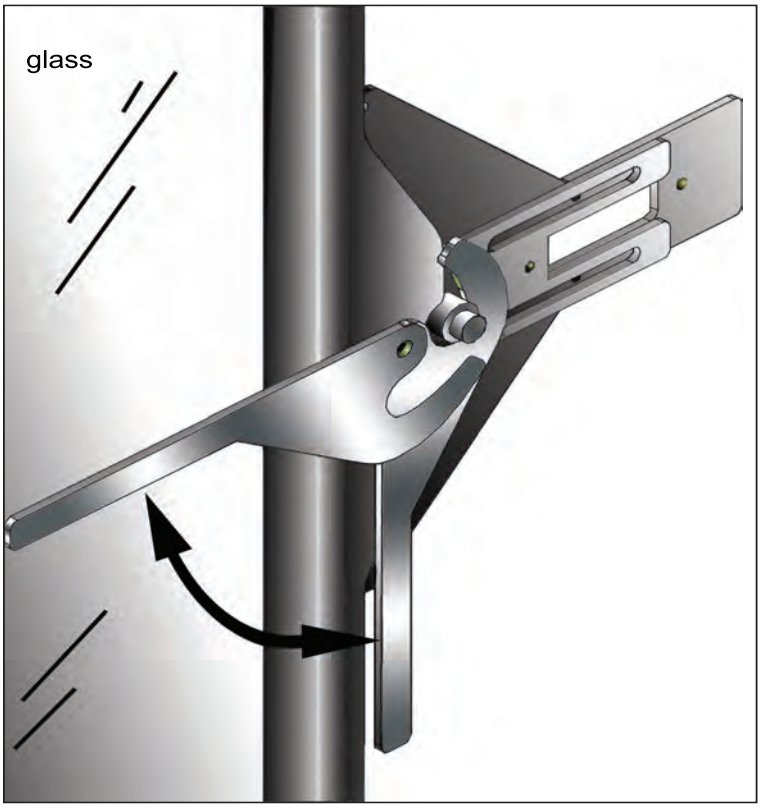

Figure 8. Glass Removal Handle

In order to install the log set, and for regular cleaning, the glass door will need to be removed. With the face off, there are two (2) handles on either side of the glass. They rotate 90° until parallel with the floor (see Figure 8). The top of the glass will move away from the firebox and then the glass door can be lifted off the resting points.

To replace the glass door, simply reverse the above procedure.

Warning: Do not touch or attempt to remove the glass if the fireplace is not completely cold.

WARNING: Never operate the fireplace with the glass removed.

Burner and Fan Removal:

1. Remove brick liners, see steps 1 to 4 in Secondary Installation - Ceramic Brick Liner Removal.
2. The control panel is held in place with a T-20 screw on each end of the panel. Remove the two (2) screws and the control panel.
3. Undo the six (6) screws holding the burner down, the andirons and grate can be removed from the burner or left on. Pull the burner to the left approximately 1" (25 mm), this is done in order to slide the venturi out of the venturi box. Remove the burner from the firebox.
4. Four (4) screws along the top of the air deflector hold it in place, remove the screws and the deflector.
5. Remove the ten (10) screws around the perimeter that hold the valve tray in place and remove the valve tray.
6. On either side of the fan there is a screw fastening the fan mount to the firebox, remove the screws to remove the fan.

Re-install everything by following steps 1 to 6 in reverse order.

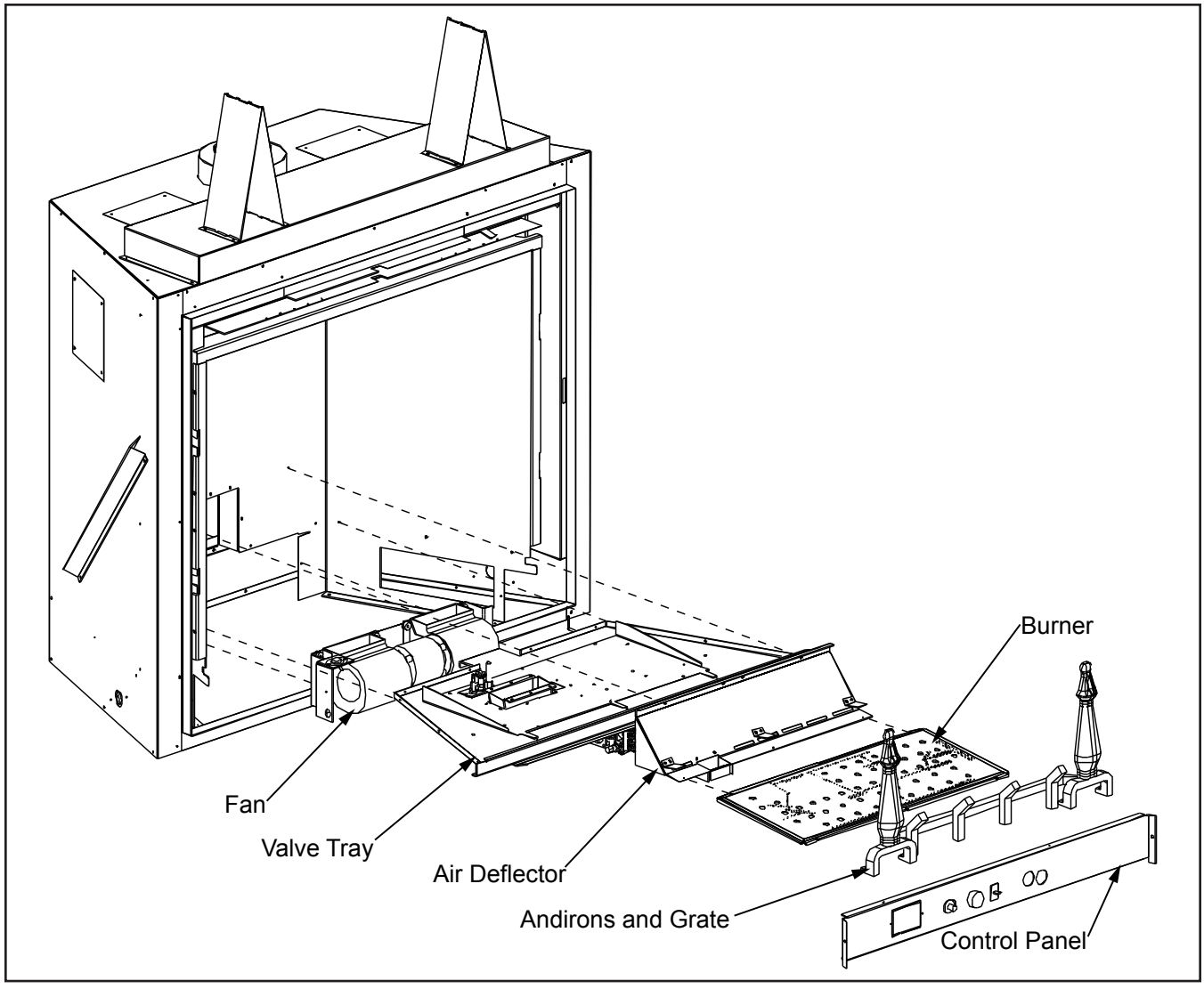

Figure 9: Removal of DV50DX Burner and Fan.

Maintenance And Service

Fuel Conversion:

TO BE INSTALLED BY A QUALIFIED SERVICE AGENCY ONLY

Please read and understand these instructions before installing.

Warning: This conversion kit shall be installed by a qualified service agency in accordance with the manufacturer's instructions and all applicable codes and requirements of the authority having jurisdiction. If the information in these instructions is not followed exactly, a fire, explosion or production of carbon monoxide may result causing property damage, personal injury or loss of life. The qualified service agency is responsible for the proper installation of this kit. The installation is not proper or complete until the operation of the converted appliance is checked as specified in the manufacturer's instructions supplied with the kit.

Kit Parts List:

1 - Orifice (NG - #30 DMS or LP - #47 DMS)

1 - Pilot Injector (NG 0.62 mm; LP 0.35 mm)

1 - Installation instruction sheet

1 - Conversion label

Carefully inspect all parts supplied with this conversion kit. If any parts have been damaged or are missing, contact your dealer, distributor or courier company to have them replaced before starting this installation.

Conversion Kit Installation:

1. Turn control knob on the gas valve to the "OFF" position and shut the gas supply off at the shut-off valve upstream of the unit. CAUTION: The gas supply must be shut off prior to disconnecting the electrical power and before proceeding with the conversion. Allow the valve and unit to cool down to room temperature.
2. Remove the glass as shown in the Maintenance and Service - Opening The Door.
3. Carefully remove the log set and ember material if they are installed.
4. Remove the burner as shown in the Maintenance and Service - Burner Removal.
5. Convert the burner orifice(s):
   a) Remove the main burner orifice with a ½ inch deep socket.
   b) Put a bead of pipe-thread sealant or approved Teflon tape on the orifice threads before installing into the brass elbow.
   c) Install the new orifice(s) from the kit into the brass elbow.
6. Convert the pilot injector:
   a) Pull the pilot hood straight up to access the pilot injector.
   b) Using a $^{5}/_{32}$" or 4 mm Allen key, remove the pilot injector.
   c) Install the new pilot injector supplied with this conversion kit. Simply screw the new injector inside the pilot hood using the Allen key,
   d) Reinstall the hood by placing the hood on the assembly, line up the key way, and snap into place.

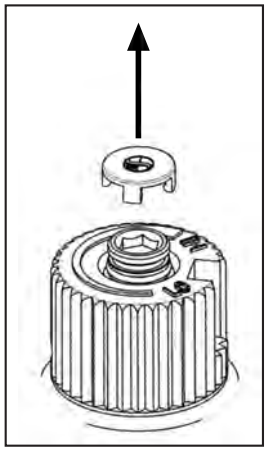

Figure 10: Removing valve cap.

7. Convert the SIT gas valve:
   a) Remove the black protection cap from the HI/LO knob by hand shown in Figure 10.

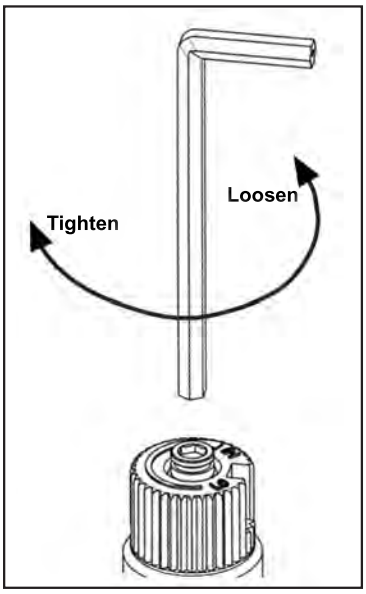

Figure 11: Removing valve screw.

   b) Insert a $^{5}/_{32}$" or 4 mm Allen wrench into the hexagonal key-way of the screw (see Figure 11), rotate it counter-clockwise until it is free and extract it.
   c) Check that the screw is clean and if necessary remove dirt.
   d) Flip the screw (refer to Figure 12).
   e) Using the Allen wrench as shown in Figure 11, rotate the screw clockwise until a torque of 9 inch lbs. **WARNING!** Do not over tighten the screw. It is recommended that you grip the wrench by the short side.
   f) Verify that if the conversion is from NG to LPG, the screw must be re-assembled with the red o-ring visible (refer to Figure 13). If the conversion is from LPG to NG, the red o-ring of the screw must be not visible.

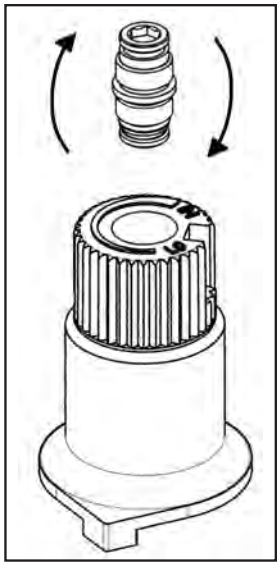
Figure 12: Flip valve screw.

   g) Re-attach the black protection cap that was removed in step a (Figure 10).

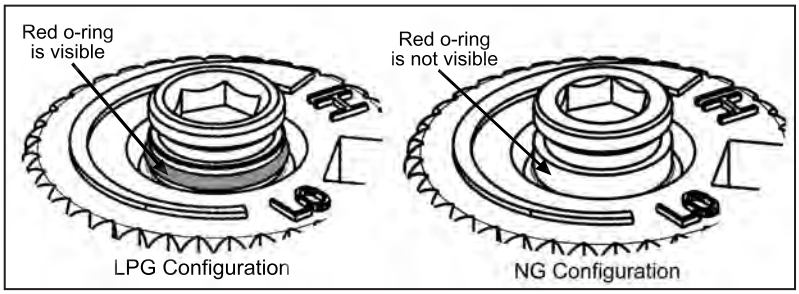

Figure 13: O-ring on valve screw.

8. Reinstall the burner, brick panels, log set, embers, and glass door. Also refer to Secondary Installation - Log Set and Embers Installation. When re-installing the burner, ensure that the burner to pilot hood relationship is similar to what is shown in Figure 14. On some units you will need to pay special attention when installing the burner that the venturi adjustment rod is properly installed into the venturi adjustment piece welded to the burner venturi tube


Figure 14. Ignitor assembly beside the burner.

9. Reconnect the main gas line if it was disconnected and open the shut-off valve at the gas line to the unit.
10. Use a small brush to apply a warm soapy water solution to all gas connections (use a half dish soap and half warm water). If a gas leak is present, bubbling will occur. Gas leaks can be repaired by using an approved pipe thread sealant or approved Teflon tape. NEVER USE AN OPEN FLAME WHEN TESTING FOR LEAKS.
11. Reconnect the electrical power to the unit.
12. Relight the main burner in both the "HI" and "LO" positions to verify proper burner ignition and operation and proper flame appearance. Also refer to Secondary Installation - Log Set and Embers Installation for a flame appearance picture.
13. MAKE SURE that the conversion label is installed on or close to the rating label to signify that the unit has been converted to a different fuel type.

Initial Installation

QUALIFIED INSTALLERS ONLY

Introduction:

This section of the owner's manual is for the use of qualified technicians only. Fireplace placement, hearths, facings, mantles, and venting terminations will be covered, as well as the gas and electric systems. There are several installation safety guidelines that must be adhered to. Please carefully read the safety precautions at the front of this manual.

Warning: Clearances must be sufficient to allow access for maintenance and service.

Placement:

The location for the fireplace can be along a wall, raised or at floor level, or in a corner. There are specific framing measurements for each situation. The basic opening should have the dimensions shown below in Figure 15.

The fireplace must have a strong and level surface to be placed on. The surface should be made of wood or a non-combustible material, not carpet.

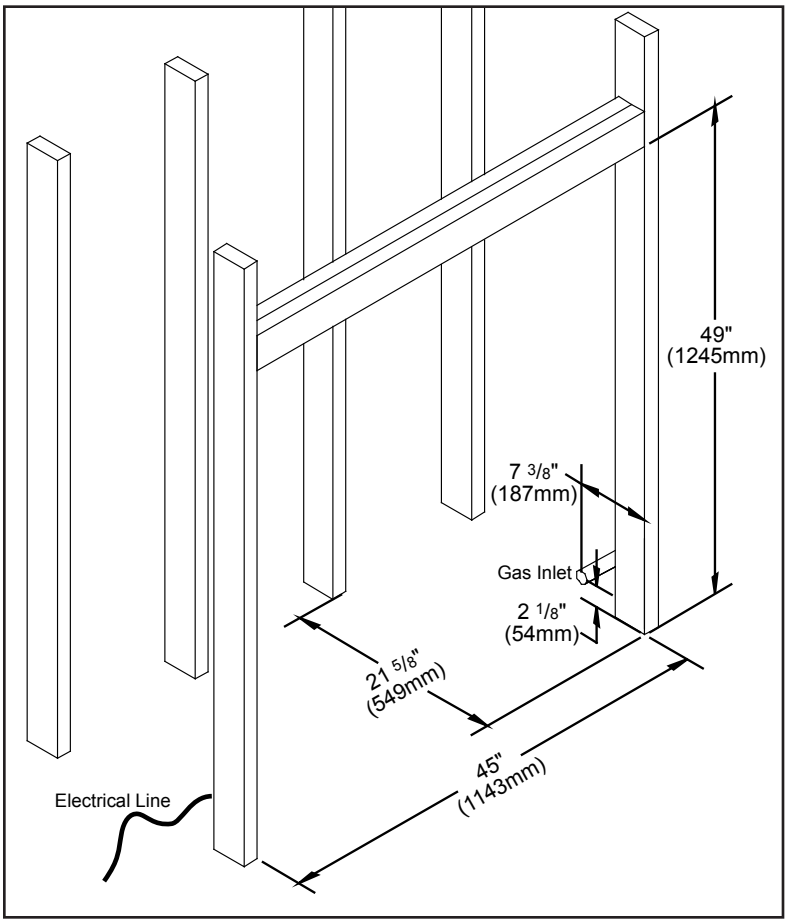

Figure 15. Dimensions for Framing the Firebox.

The 21⅝ inches (549 mm) dimension takes into account the 1 inch (25 mm) standoff on the back of the firebox. The framing boards may touch the standoffs, but **no insulating material can be placed between the frame and the standoffs.**

The gas line, ⅜" NPT, should be brought to the right side of the fireplace. If this set up is inconvenient, the electrical wire and the gas line configuration can be reversed.

The location should be chosen so the fireplace will be at least 36 inches (914 mm) from drapes, doors and other combustibles. The fireplace opening should also be at least 7 inches (178 mm) from the nearest perpendicular wall (sidewall to the edge of the opening).

Firebox framing:
Depth 21⅝" (549 mm)
Width 45" (1143 mm)
Height 49" (1245 mm)

Gas/Electrical Inlet:
Distance back 7⅜" (187 mm)
Distance up 2⅛" (54 mm)

Initial Installation

QUALIFIED INSTALLERS ONLY

Corner Installation:

The dimensions for installing a fireplace in the corner of a room are given below in Figure 16.

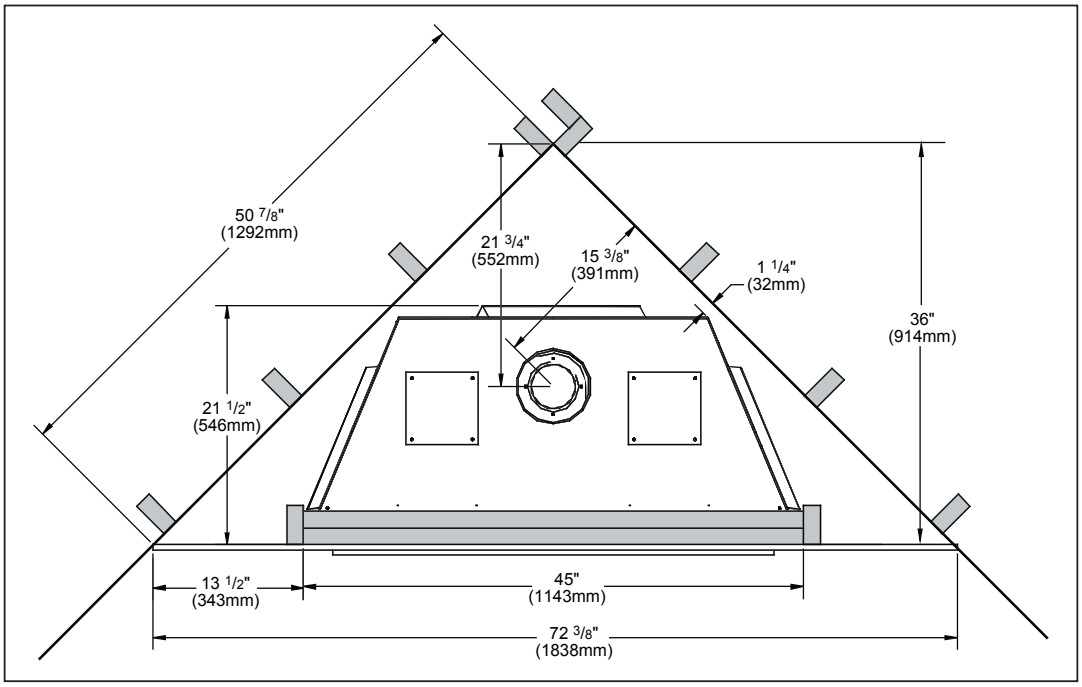

Figure 16. Dimensions for a corner installation.

Raised Fireplaces and Hearths:

There are a few options with raised fireplaces: raised with no hearth, raised with a raised hearth, or raised with a floor level hearth. If the fireplace is 4 inches (101 mm) or more above the floor, a hearth is not required. This measurement should be taken from the top of the flooring, i.e. the top of the carpet. The fireplace cannot be placed within 37 inches (940 mm) of the ceiling. When installing a raised fireplace, it is imperative that the support stand is strong enough to hold the weight of the fireplace and venting.

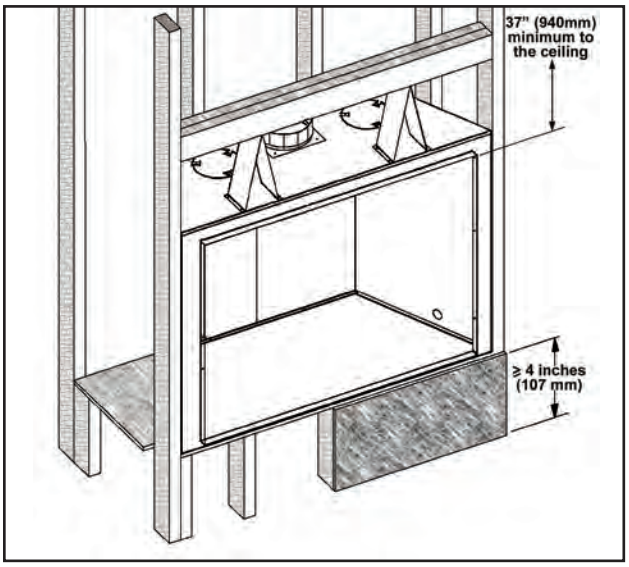

Figure 17. Raised Fireplace with no Hearth

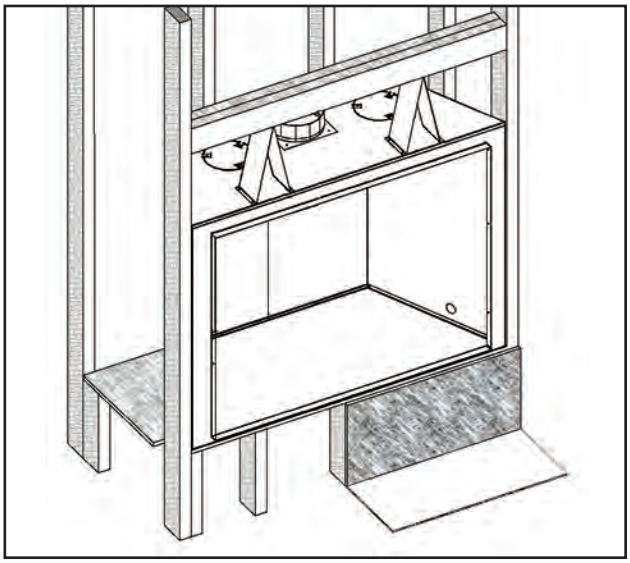

Figure 18. Raised Fireplace with Floor Level Hearth

Initial Installation

QUALIFIED INSTALLERS ONLY

If the unit is raised 4" (102mm) or less it is mandatory to have a hearth installed with a protector pad (sheet metal) placed directly on the floor or hearth framing, with the cement board (see specs below) on top of it. Tile, or another non-combustible material forms the top layer of the hearth. A decorative trim may be added to the edge of the hearth. The trim can be combustible as long as the hearth extends at least **16" (406 mm)** in front of the fireplace and **1" (25 mm)** on either side of the fireplace opening (see Figure 15). To install the face, it is necessary for the bottom flange of the fireplace opening to overlap or be flush with the tile. If the total thickness of the protector pad, cement board, and finished tile is more than 1½" (38 mm) the fireplace must be raised to accommodate additional thickness.

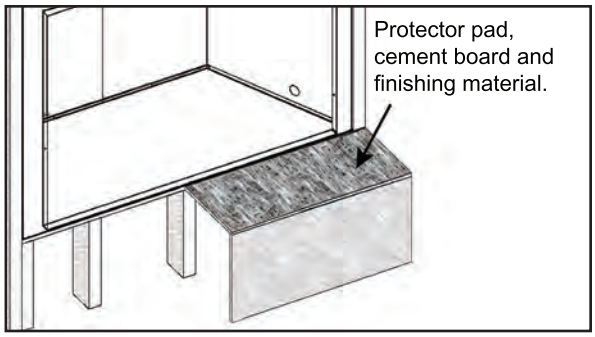

Figure 19. Raised Fireplace with Raised Hearth

Fireplace Surround:

NOTE: Any paint that is applied to the mantel or facing above the unit should be "heat resistance" or it may discolour.

CEMENT BOARD: The cement board can be fastened to the front of the unit with self-drilling metal screws. It is safe to screw to the outer border of the fireplace. Cement board for the hearth can be purchased at a local building material store. The board must have a k-value of 7.69 (metric version: 13 W/m × K) and a R-value of 0.13 (metric version: 0.023 m² × K/W) or better.

TILED FINISH: Because of the amount of heat exuded by the fireplace, drywall cannot come directly up to the fireplace. Figure 20 shows the minimum dimensions for the cement board. Tile or other non-combustible materials cover the cement board, but do not overlap into the fireplace opening. The total depth of the cement board and the finishing materials should be a minimum of 1" (25 mm) to maximum of 1⅜" (35 mm). The fireplace front will be installed over top of the finishing material.

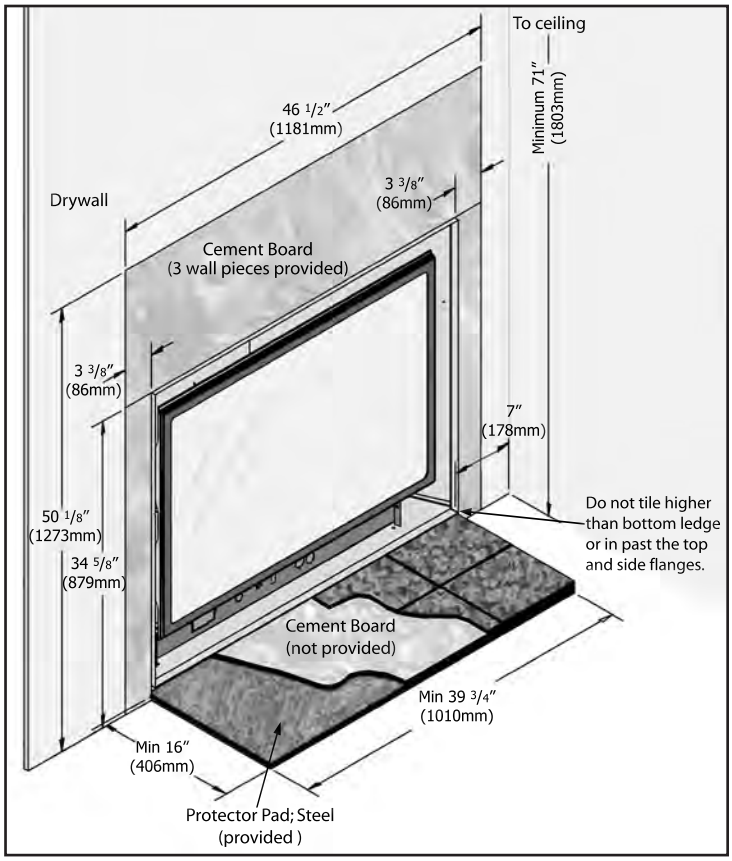

Figure 20. Floor Level Hearth Requirements With Dimensions Around Opening.

SMOOTH FINISH: The fireplace will have to be recessed by ½" (12 mm) and two (2) layers of cement board must be used if the area around the fireplace will be finished flush with the rest of the wall.

ROCK OR BRICK FINISH: If the face of the fireplace is to be recessed, the face option chosen will determine the size and shape of the surrounding material (i.e. brickwork). Since the dimensions provided on the face option instruction sheet are only approximations, it is recommended that the steel template of the chosen face is used. See Parts List - Options for the face template part number.

Initial Installation

QUALIFIED INSTALLERS ONLY

Mantle Clearances:

It is not necessary to install a mantle, but if one is desired it is important to follow the guidelines shown in Figure 21.

Top of unit to horizontal framing:
12 5/16" (313 mm)

Top of flange to top of cement board:
15 ½" (394 mm)

Top of flange to bottom of 3½" mantle:
24 ½" (622 mm)

Top of flange to bottom of 8" mantle:
27 ½" (699 mm)

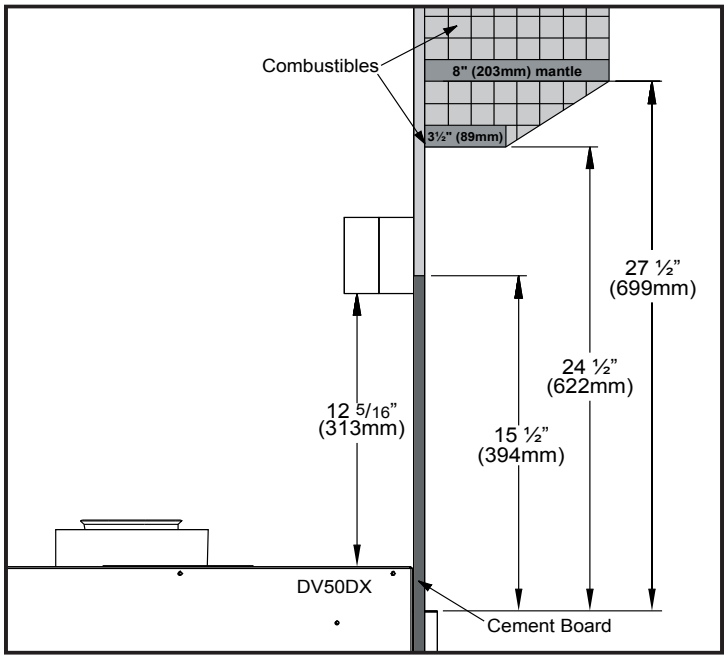

Figure 21. Combustible Mantle Clearances.

Vent Termination Restrictions:

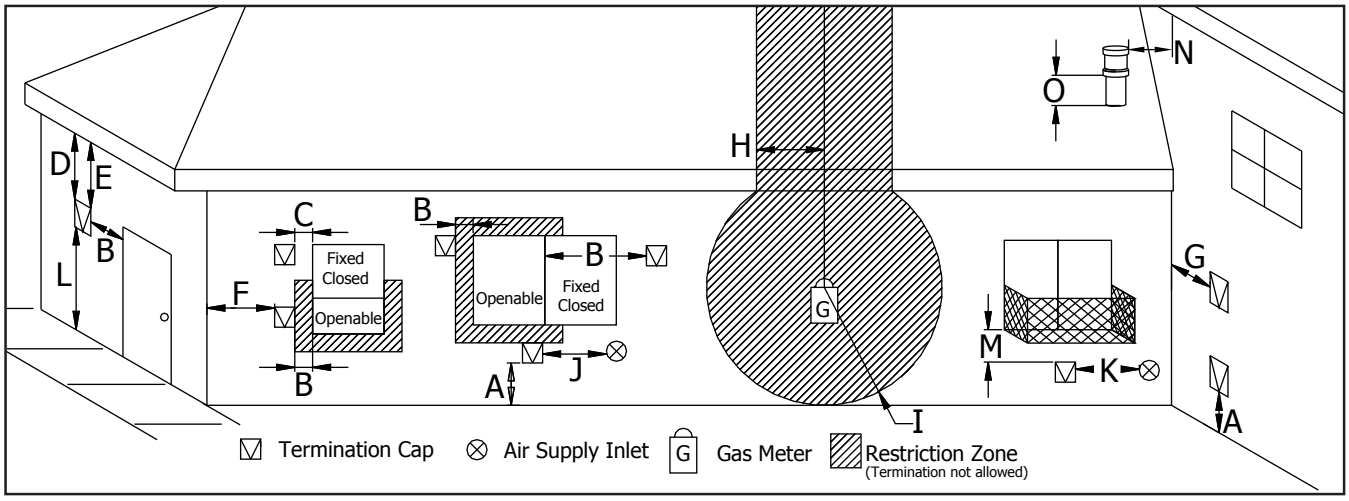

Figure 22. Vent Termination Restrictions, refer to Table 2.

Initial Installation

QUALIFIED INSTALLERS ONLY

Table 2: Vent termination clearances, refer to Figure 22.

Letter	Canadian Installation [1]	US Installation[2]	Description
A	12 in (30 cm)		Clearance above grade, verandah, porch, deck, or balcony.
B	12 in (30 cm)	9 in (23 cm)	Clearance from window or door that may be opened.
C	12 in (30 cm)*		Clearance from permanently closed window (to prevent condensation).
D	24 in (60 cm)*		Vertical clearance to ventilated soffit located above the terminal, within a horizontal distance of 2 ft (60 cm) from center line of terminal.
E	18 in (45 cm)*		Clearance to unventilated soffit.
F	12 in (30 cm)*		Clearance to outside corner.
G	12 in (30 cm)*		Clearance to inside corner.
H	3 ft (91 cm) within a height of 15 ft (4.5 m) above the meter/ regulator assembly	3 ft (91 cm) within a height of 15 ft (4.5 m) above the meter/ regulator assembly*	Clearance to each side of center line extended above meter/regulator assembly.
I	3 ft (91 cm)	3 ft (91 cm)*	Radial clearance around service regulator vent outlet.
J	12 in (30 cm)	9 in (23 cm)	Clearance to non-mechanical air supply inlet to building, or the combustion air inlet to any other appliance.
K	6 ft (1.83 m)	3 ft (91 cm) above if within 10 ft (3 m) horizontally	Clearance to mechanical air supply inlet.
L	7 ft (2.13 m)[t]	7 ft (2.13 m)*[t]	Clearance above paved sidewalk or paved driveway located on public property.
M	12 in / 30 cm[+]	12 in / 30 cm*[+]	Clearance under verandah, porch, deck, or balcony.
N	12 in (30 cm)*		Clearance horizontally to any surface (such as an exterior wall) for vertical terminations.
O	12 in (30 cm)		Clearance above roof line for vertical terminations.

[1] In accordance with the current CSA B149, Natural Gas and Propane Installation Code.
[2] In accordance with the current ANSI Z223.1 NFPA 54, National Fuel Gas Code.
* These numbers are only estimates. Clearance in accordance with installation codes and the requirements of the gas supplier.
[t] A vent shall not terminate directly above a side walk or paved driveway that is located between two single family dwellings and it serves both dwellings.
[+] Permitted only if verandah, porch, deck, or balcony is fully open on a minimum of two sides beneath the floor.

NOTE: Venting terminals shall not be recessed into walls or siding.

Fireplace Horizontal Vent Kit 50-1235:

Please read and understand these instructions before installing. Failure to follow these instructions carefully could cause property damage or personal injury.

KIT COMPONENTS:

Qnty	Description	Qnty	Description
1	Horizontal direct vent termination cap	4	Wire spacers
1	Flue collar adapter	1	4 oz tube Mill-Pac Sealant
1	Wall thimble	1	4 oz tube RTV silicone
1	5’ (190 cm) length of Ø4” (10 cm) double walled flex pipe	12	9/16” tech screws
1	5’ (190 cm) length of Ø6⅝” (16.8 cm) double walled flex pipe	8	1½” wood screws

Please ensure that all components are supplied with this kit. If components are missing or have been damaged, contact your dealer, distributor, or courier company. Do not attempt the installation if components are missing or damaged.

Initial Installation

QUALIFIED INSTALLERS ONLY

INSTALLATION INSTRUCTIONS:

1. Plan your installation and clearances to combustibles. Decide on a location for the unit that will meet the clearances noted in the venting section, and any or all local code requirements.

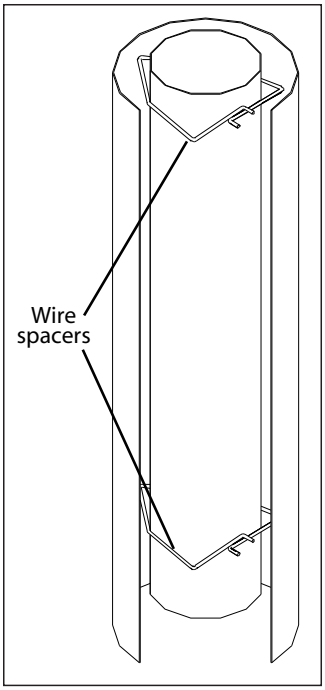

Figure 23: Wire Spacers.

2. Set the appliance in the desired location. Determine if any wall studs, electrical wiring, or plumbing pipes are in the way of the venting system as it passes through the exterior wall. The fireplace location should be adjusted if obstructions are found in the wall.
3. Project a line from the center point of the flue outlet upward and outward to the desired flue outlet location on the exterior wall. Using this center point, scribe a 10" (25.4 cm) hole or square on the wall. Cut the hole from the interior through the exterior wall surfaces.
4. Frame the hole as shown in Figure 27.
5. Trim the wall thimble to match the wall thickness as necessary. Install the wall thimble and secure it to the inner wall frame using four (4) 1½" wood screws. If a wall is greater than 8" (203mm) in depth, the clearance above the flex must be 4⅜" (111mm)

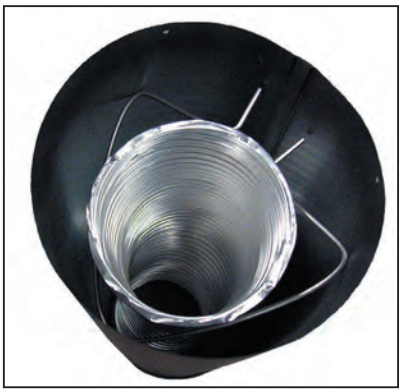

Figure 24: Wire Spacer in Place.

6. Apply a bead of Mill-Pac Black sealant to the new Ø4" (10 cm) by 5" (12.5 cm) provided flue collar adaptor. Press the flue collar into the flue outlet of the fireplace so that the Mill-Pac seals the flue collar to the flue outlet.
7. Stretch both the Ø4" (10 cm) flex vent and the Ø6⅝" (16.25 cm) flex intake liner to the length needed to ensure the flex can be easily connected to the vent terminal.
8. Slide the Ø6⅝" (16.25 cm) flex intake liner over the flex vent. Install four (4) wire spacers around the flex pipe. Ensure the wire spacers are positioned at either end of the pipes, and at each end of any elbows in the liners (refer to Figure 23 and 24).
9. Install the flex pipe assembly through the wall thimble, ensure that this portion of pipe slides

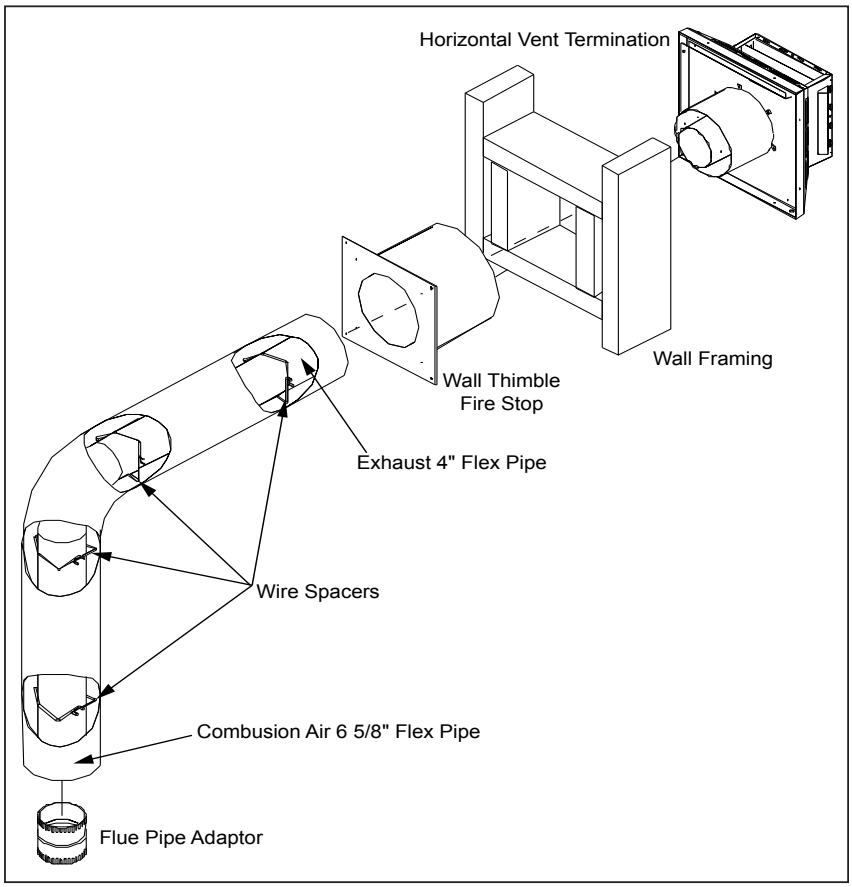

Figure 25: Installation of Fireplace Horizontal Vent Kit.

through the outside wall far enough to connect onto the vent termination cap.

10. Apply a bead of Mill-Pac Black sealant to the top section of the Ø4" (10 cm) by 5" (12.5 cm) flue collar adaptor previously installed into the fireplace flue outlet. Slide the Ø4" (10 cm) flex vent over the flue collar and secure with three (3) sheet metal screws evenly spaced.
11. Place a bead of high temperature silicone on the intake collar of the fireplace, slide the Ø6⅝" (16.25 cm) flex intake liner over the collar, secure the flex liner with three (3) sheet metal screws evenly spaced.
12. On the outside of the exterior wall, apply a bead of Mill-Pac Black sealant to the Ø4" (10 cm) pipe of the vent terminal. Slide the flex liner onto the vent terminal and secure with three (3) sheet metal screws evenly spaced.
13. Place a bead of high temperature silicone on the intake collar of the vent terminal, slide the Ø6⅝" (16.25 cm) flex intake liner over the collar, secure the flex liner with three (3) sheet metal screws evenly spaced.
14. Attach the vent terminal to the outside of the house using four (4) wood screws provided.
15. Light the appliance and ensure proper operation.

Other Approved Vent Parts:

Table 3: Approved Vent Manufacturers

Manufacturer	Trade Name	Nominal Sizes
American Metal Products	AmeriVent Direct	4" - 6 5/8"
Security Chimneys International LTD	Secure Vent	4" - 6 5/8"
Selkirk Metalbestos	Direct-Temp	4" - 6 5/8"
Simpson Dura-Vent	Direct Vent GS	4" - 6 5/8"

The DV50DX fireplace has been tested and certified for use with AMERICAN METAL PRODUCTS "AMERIVENT DIRECT", SIMPSON DURAVENT TYPE GS PIPE FOR GAS STOVES. SECURITY CHIMNEY'S "SECURE VENT DIRECT VENT SYSTEM" and SELKIRK "DIRECT-TEMP VENT SYSTEM" kits are available for horizontal and vertical venting. When using Simpson Duravent, it is recommended that, before installation, a bead of RTV High Temperature Silicone should be applied to each outer vent joint, and Mil-Pac to each inner joint. When planning an installation, it will be necessary to select the proper length of vent pipe for the particular requirements.

WARNING: Do not mix parts from different vent manufacturers's systems.

EXCEPTION TO WARNING: This product has been evaluated by Intertek for using a Direct Vent GS starting collar in conjunction with Secure Vent, Direct-Temp, and Ameri Vent Direct venting systems. Use of these systems with the Direct Vent GS starting collar is deemed acceptable and does not affect the Intertek WH listing of the appliance.

Table 4: Vent part numbers (Must state if galvanized or black wanted, PART NUMBERS).

Direct Vent GS	Direct-Temp	Secure Vent	Ameri Vent Direct	Description
908	4DT-6	SV4L6		6" pipe length
			4D7	7" pipe length
907	4DT-9			9" pipe length
906	4DT-12	SV4L12	4D12	12" pipe length
904	4DT-24	SV4L24	4D2	24" pipe length
903	4DT-36	SV4L36	4D3	36" pipe length
902	4DT-48	SV4L48	4D4	48" pipe length
945	4DT-EL45	SV4EBR45	4D45B	45° elbow, black
990	4DT-EL90	SV4EBR90	4D90B	90° elbow, black
950	4DT-VS	SV4VS		Vinyl siding standoff/sheild
942	4DT-WT	SV4RSN	4DWT	Wall thimble
953	4DT-SC	SV4FC	4DSC	Storm collar
963	4DT-FS	SV4BF	4DFSP	Fire stop
988	4DT-WS/B	SV4BM	4DWS	Wall strap/support/band
970	4DT-HKA	SV0SHK	4DHTK1	Horizontal termination kit (SD: Basic Kit, SEL: Kit A, SC: Standard Kit)
911				11" to 14 5/8" pipe, adjustable
	4DT-AJ		4D12A	4" to 10" pipe , adjustable
		SV4LA12		1½" to 12" pipe , adjustable
943	4DT-AF6		4DF	Flashing, 0/12 to 6/12 roof pitch
943S	4DT-AF12		4DF12	Flashing, 7/12 to 12/12 roof pitch
		SV4FA		Flashing, 1/12 to 7/12 roof pitch
		SV4FB		Flashing, 8/12 to 12/12 roof pitch
943F		SV4F		Flat flashing
980	4DT-VC	SV4CGV	4DVC	Vertical termination
991	4DT-HVC			High wind vertical termination
984	4DT-HC	SV4CHC	4DHC	Horizontal square termination
985	4DT-HHC			High wind horizontal termination
978	4DT-VKC	SV0FAK	4DVTK	Vertical termination kit
971	4DT-HKB	SV0SHK2	4DHTK2	Horizontal termination kit (SD: Kit A, SEL: Kit B, SC: Kit)

Initial Installation

QUALIFIED INSTALLERS ONLY

VENTING:

This fireplace has been tested and certified for use with SIMPSON DURAVENT DIRECT VENT TYPE "GS" PIPE FOR GAS STOVES, SECURITY CHIMNEY'S SECURE VENT DIRECT VENT SYSTEM kits, AMERICAN METAL PRODUCTS AMERIVENT DIRECT and DIRECT-TEMP SELKIRK METALBESTOS.

A 1" (25 mm) clearance to combustibles must be maintained around any vertical vent pipe. Around a horizontal vent pipe, the clearance to combustibles should be 2" (51 mm) above and 1½" (38 mm) on the sides and bottom. When combustible materials are directly above a 90° elbow, 5" (127 mm) of clearance are necessary (see Figure 26).

Table 5. Vent Pipe Minimum Clearances.

	Vertical Pipe to the Side Walls	Horizontal Pipe to the Sides & Bottom	Above an Elbow Above the Unit	Above an Elbow Not Above the Unit	Above Horizontal Vent Pipe	Wall Frame 8" (203mm) or less
Hard Pipe	1" (25.4 mm)	1½" (38.1 mm)	5" (127 mm)	3" (76.2 mm)	2" (51 mm)	10"x10" (25x25cm)
Flex Pipe	1" (25.4 mm)	1½" (38.1 mm)	8" (203 mm)	4 3/8" (111 mm)	4 3/8" (111 mm)	10"x10" (25x25cm)

A 10" (254 mm) x 10" (254 mm) frame (see Figure 22) will assure the proper support and spacing for the vent pipe as it passes through the wall. Installations in Canada require that a wall thimble be used for passing through walls and ceilings. All sealing and vapour barriers must comply with local building codes.

When planning an installation, it is necessary to select the proper length of vent pipe for the particular requirements. The configuration of the venting pipes depends on the locations of walls, ceilings and studs. However, the pipes cannot be of arbitrary length and arrangement. Because the length of the vertical and horizontal sections dramatically affects the burning efficiency of the fireplace, certain guidelines have been set in INITIAL INSTALLATION - VENT CONFIGURATIONS AND RESTRICTOR SETTINGS.

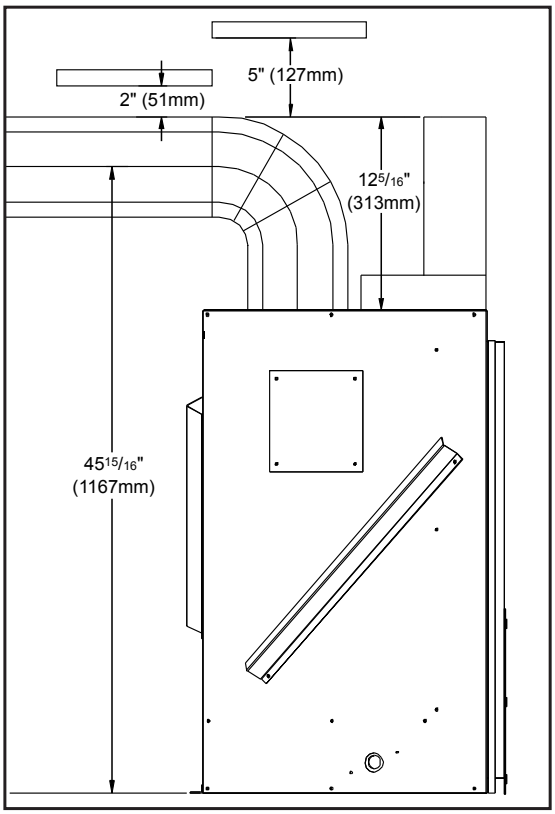

Figure 26. Vent Pipe Clearances.

Venting terminals can not be recessed into a wall or siding.

WARNING: This gas appliance must not be connected to a chimney flue serving a separate solid-burning appliances.

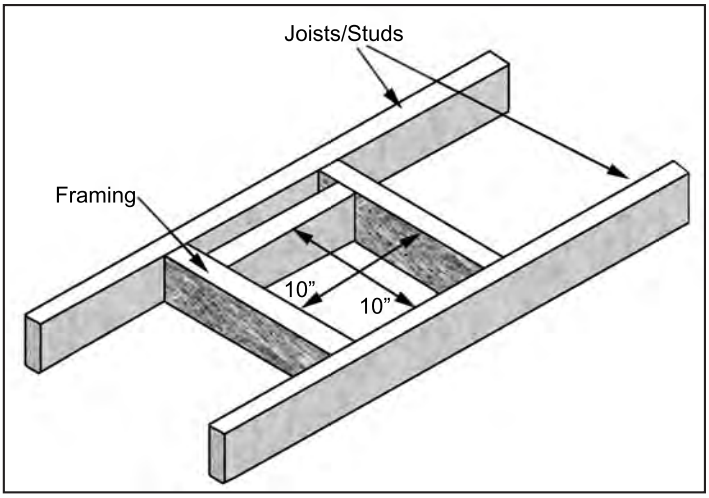

Figure 27. Vent Framing Through Wall/Ceiling

Vent Configurations and Restrictor Settings:

Figures 28 shows the range of venting options, it shows possible vent configurations if the unit is top vented, for vertical and horizontal terminations, any layout that remains within the shaded area is acceptable. Having the fewest number of elbows is ideal, as they tend to disrupt air movement. Using 45° elbows is preferable to using 90° elbows. Also, a shorter vent system will perform better than a longer one.

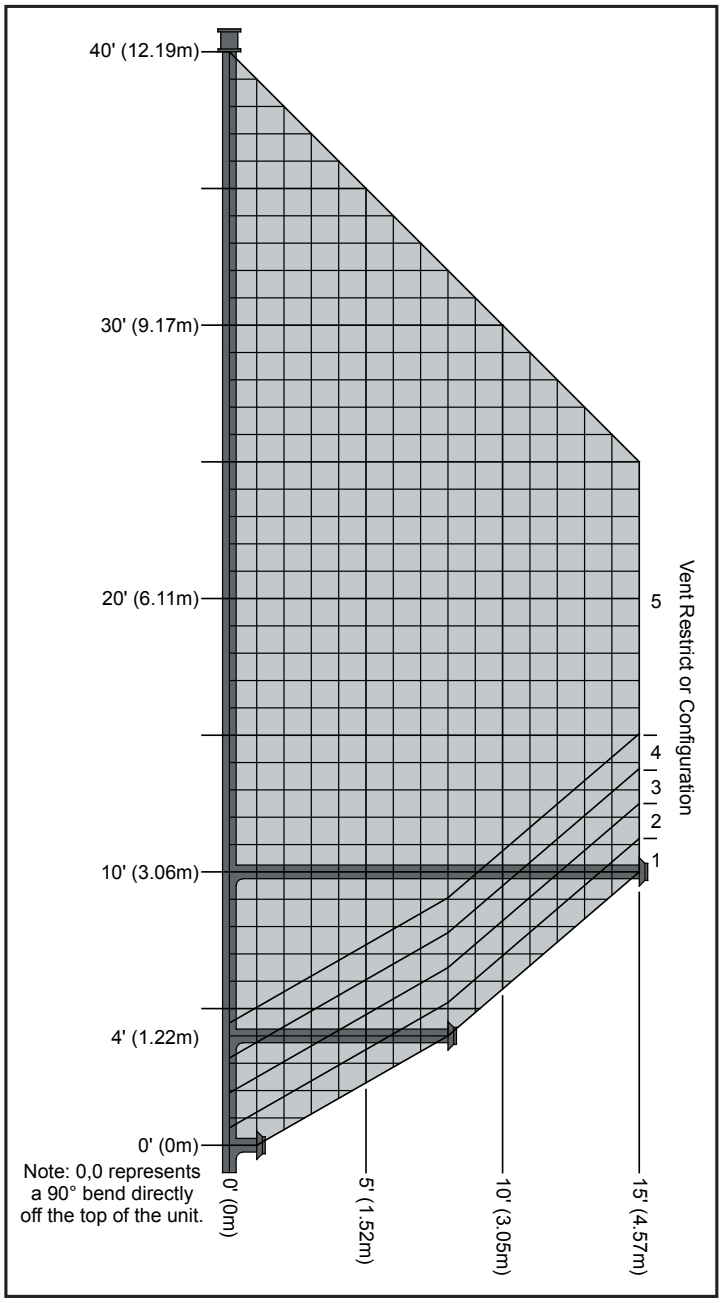

Figure 28. Possible Vent Configurations

The vent restrictor controls the amount of air moving through the vent pipe. Longer vertical vent lengths necessitate greater restriction; position 1 is open and position 5 is maximum restriction. Figure 28 shows the vent restrictor settings required, relative to the length of vent pipe. The vent restrictor is located on the right side of the fireplace, above the glass. Figure 29 shows the vent restrictor handle and the holes that indicate the different levels. To avoid injury, it is best to make this adjustment when the fireplace is cool or use welder's gloves or oven mitts.

Note: 0,0 in Figure 28 represents a 90° bend directly off the outlet of the unit, 46" (1169 mm) from floor. This is for all horizontal instances **except** when using Selkirk and having less than a 4 feet (1.22 m) rise and 8 feet (2.44 m) horizontal offset. In this case, a 1 foot rise must be added below the 90° bend.

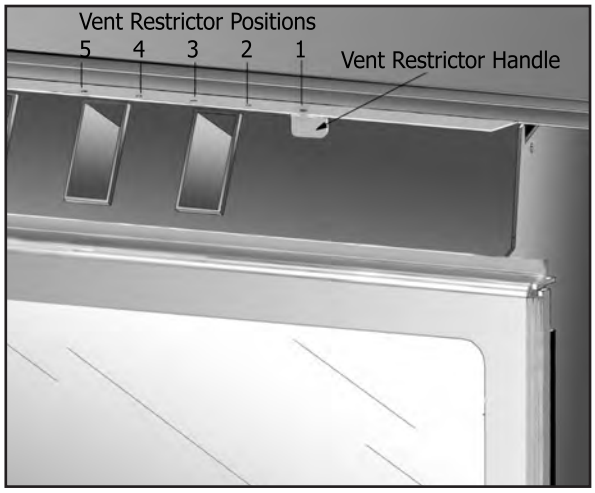

Figure 29. Possible Vent Restrictor Positions

Initial Installation

QUALIFIED INSTALLERS ONLY

Horizontal Termination:

NOTES:

1. **Horizontal pipes must not be level. For every 12 inches (305 mm) of horizontal travel (away from the stove), there should be at least ¼ inch (6.4 mm) of vertical travel. Never allow the vent to run downward, as this could cause high temperatures or even present the possibility of a fire.**
2. The exterior of the horizontal vent termination must not be blocked or obstructed.
3. If the vent termination is not being attached to wood, the four wood screws provided should be replaced with material appropriate fasteners.
4. For buildings with vinyl siding, a vinyl standoff should be installed between the vent cap and the exterior wall. Attach the vinyl siding standoff to the horizontal termination. Note that the termination bolts onto the flat portion of the standoff, providing an air space between the wall and the vent termination. The air gap prevents excessive heat from possibly melting the vinyl siding.
5. Horizontal pipes must be supported every 3 feet (914 mm). Plumber's all round strap will suffice.

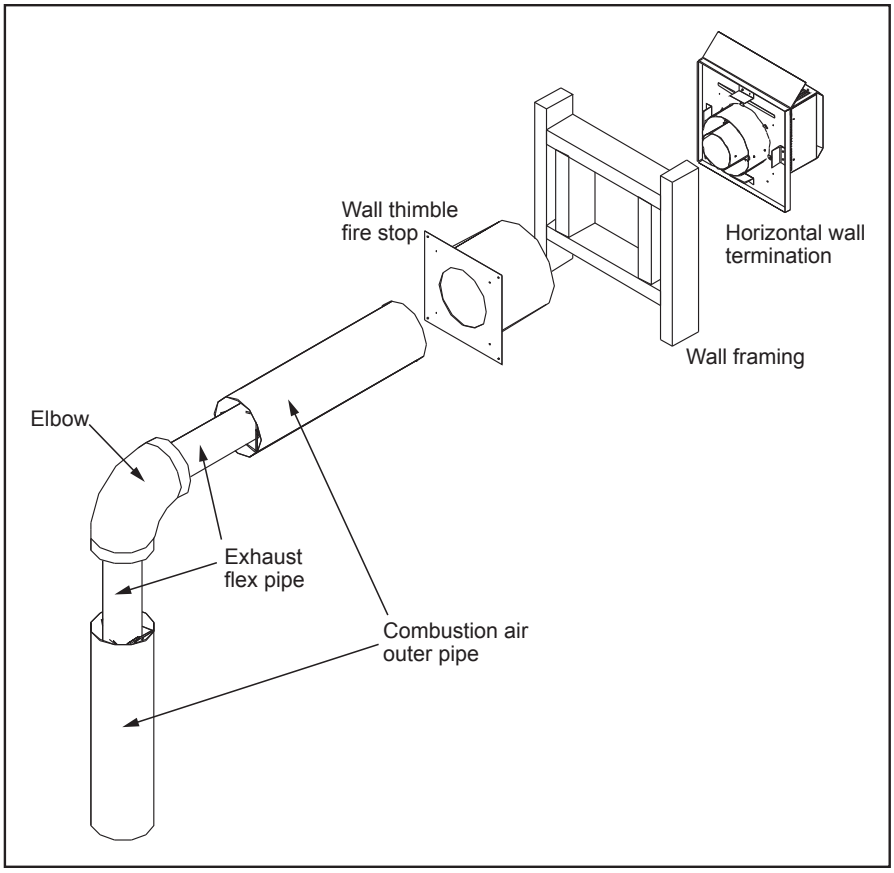

Figure 30. Horizontal Vent Termination

6. When running horizontal pipe, clearances to combustibles must be maintained 1½ inches (38 mm) sides, 1½ inches (38 mm) bottom, and 2 inches (51 mm) top.

Step 1. Set the fireplace in the desired location. Check to determine if wall studs will be in the way when the venting system is attached. If this is the case, the location of the fireplace may have to be adjusted or the venting may have to be offset.

Step 2. Direct vent pipe sections are designed with special twist-lock connections. Dry fit the desired combination of pipe and elbows to the appliance adaptor.

Step 3. With the pipe in the correct position and attached to the fireplace, mark the wall for a 10 inches (25.4 cm) x 10 inches (25.4 cm) square hole (see Figure 27). The center of the hole should match the center line of the horizontal pipe. Cut and frame the hole in the exterior wall where the vent will be terminated. If the wall being penetrated is made of a non-combustible material (i.e. masonry or concrete) a 7 inches (17.8 cm) hole is acceptable.

QUALIFIED INSTALLERS ONLY

NOTE: For Simpson Duravent only, place a bead of Mil-Pac or Rutland No 78 Stove and Gasket Cement on the outer edge of the inner exhaust pipe (non-flared end). Push the pipe sections together, then twist about ¼ turn, making sure the two sections are fully locked. Wrap all seams with foil ducting tape.

Step 4. With the hole now framed, the wall thimble installed, and the pipe extending into the wall, proceed to the outside. Attach the termination to the pipe using RTV and Mil-Pac or Rutland No 78 Stove and Gasket Cement to seal joints. The vent pipe must extend into the vent cap at least 1¼ inches (3.2 cm). Secure the connection between the vent cap and the pipe by attaching the two (2) sheet metal straps, which extend from the vent cap assembly to the outer wall of the vent pipe. Bend any remaining portion of the strap back towards the vent cap. Security Secure Vent uses a twist lock cap.

Step 5. Position the horizontal vent termination in the center of the 10 inches (25.4 cm) square hole and attach to the exterior wall with the four screws provided. The arrow on the vent termination should be pointing up. Run a bead of non-hardening mastic around the edges of the vent cap, to make a seal with the wall. Ensure the proper clearances to combustibles have been maintained.

VERTICAL TERMINATION:

Step 1. Check the instructions for required clearances (air spaces) to combustibles when passing through ceilings, walls, roofs, enclosures, attic rafters, or other nearby combustible surfaces. Do not pack air spaces with insulation.

Step 2. Set the gas appliance in the desired location. Drop a plumb bob down from the ceiling to the position of the appliance flue exit, and mark the location where the vent will penetrate the ceiling. Drill a small hole at this point. Next, drop a plumb bob from the roof to the hole previously drilled in the ceiling, mark the spot where the vent will penetrate the roof. Determine if ceiling joists, roof rafters, or other framing will obstruct the venting system. You may wish to relocate the appliance, or to offset, to avoid cutting load bearing members.

Step 3. To install the Round Support Box/Wall Thimble in a flat ceiling, cut a 10 inch (25.4 cm) square hole in the ceiling, centered in the hole drilled in Step 2. Frame the hole as shown in Figure 27.

Step 4. Assemble the desired lengths of black pipe and elbows necessary to reach from the appliance adapter up through the Round Support Box. Insure that all pipe and elbow connections are in their fully twist-locked position.

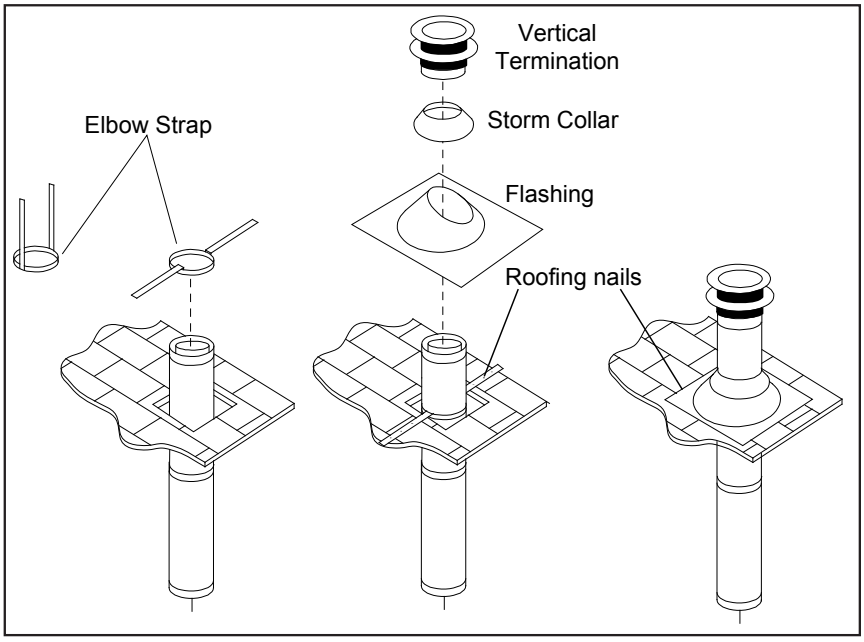

Figure 31. Vertical Vent Termination

STEP 5. Cut hole in the roof centered on the small hole placed in the roof from Step 2. The hole should be of sufficient size to meet minimum requirements for Clearance to Combustibles, as specified. Continue to assemble lengths of pipe and elbows necessary to reach from the ceiling support box up through the roof line. Galvanized pipe and elbows may be utilized in the attic, as well as above the roof line. The galvanized finish is desirable above the roof line, due to the higher corrosion resistance.

STEP 6. Once the pipe sections have been joined, and run up through the hole in the roof, slip an elbow strap over the exposed sections, bend the support straps outwards, and push the elbow strap down to the roof level, as shown in Figure 31. Tighten the clamp around the pipe section. Use a level to make sure the pipe is truly vertical. With roofing nails, secure the support straps to the roof. Seal the nails holes heads with non-hardening mastic. Trim the excess length of the support straps that extend out beyond the edge of the flashing.

STEP 7. Slip the flashing over the pipe section protruding through the roof. Secure the base of the flashing to the roof with roofing nails. Use a non-hardening sealant between the uphill edge of the flashing and the roof. Insure the roofing material overlaps the top edge of the flashing. Verify that you have at least the minimum clearance to combustibles at the roof line.

STEP 8. Continue to add pipe sections until the height of the vent cap meets the minimum code requirements. Refer to Figure 32 and Table 6. Note that for steep roof pitches, the vent height must be increased. In high wind conditions, nearby trees, adjoining roof lines, steep pitched roofs, and other similar factors can result in poor draft, or down drafting. In these cases, increasing the vent height may solve the problem.

STEP 9. Slip the storm collar over the pipe, and push it down to the top of the roof flashing as shown in Figure 31. Use the non-hardening sealant around the joint between the pipe and the storm collar.

STEP 10. Twist-lock the vent cap.

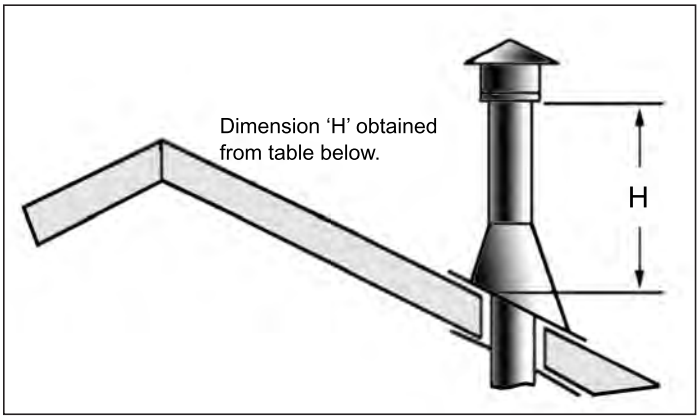

Figure 32: Height of Vertical Termination; Reference Table 6.

Table 6: Minimum 'H' for Figure 27

Roof Pitch	Minimum Height (H)	
	Feet	Meters
Flat to 7/8	1	0.3
Over 7/12 to 8/12	1.5	0.46
Over 8/12 to 9/12	2	0.61
Over 9/12 to 10/12	2.5	0.76
Over 10/12 to 11/12	3.25	0.99
Over 11/12 to 12/12	4	1.22
Over 12/12 to 14/12	5	1.52
Over 14/12 to 16/12	6	1.83
Over 16/12 to 18/12	7	2.13
Over 18/12 to 20/12	7.5	2.29
Over 20/12 to 21/12	8	2.44

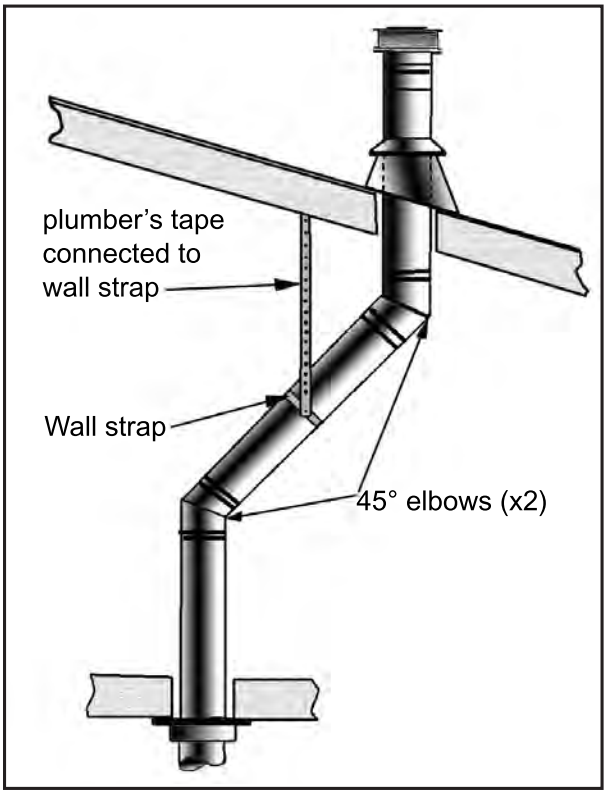

Figure 33: Use of Wall Straps.

(4) Any occupied areas above the first floor, including closets and storage spaces, which the vertical vent passes through, must be enclosed. The enclosure may be framed and sheet-rocked with standard building materials. However consult the appliance manufactures installation instructions for the minimum allowable clearance between the outside of the vent pipe, and the combustible surfaces of the enclosure. Do not fill any required air spaces with insulation.

NOTES:

(1) If an offset is necessary in the attic to avoid obstructions, it is important to support the vent pipe every 3 feet (914 mm), to avoid excessive stress on the elbows, and possible separation. Wall straps are available for this purpose (see Figure 33).

(2) When ever possible, use 45° degree elbows instead of 90° degree elbows. The 45° degree elbow offers less restriction to the flow of flue gases and intake air.

(3) For multi story installations; a ceiling firestop is required at the second floor, and any subsequent floors (see Figure 34). The opening should be framed to 10" (254 mm) x 10" (254 mm) inside dimensions, in the same manner as shown in Figure 27.

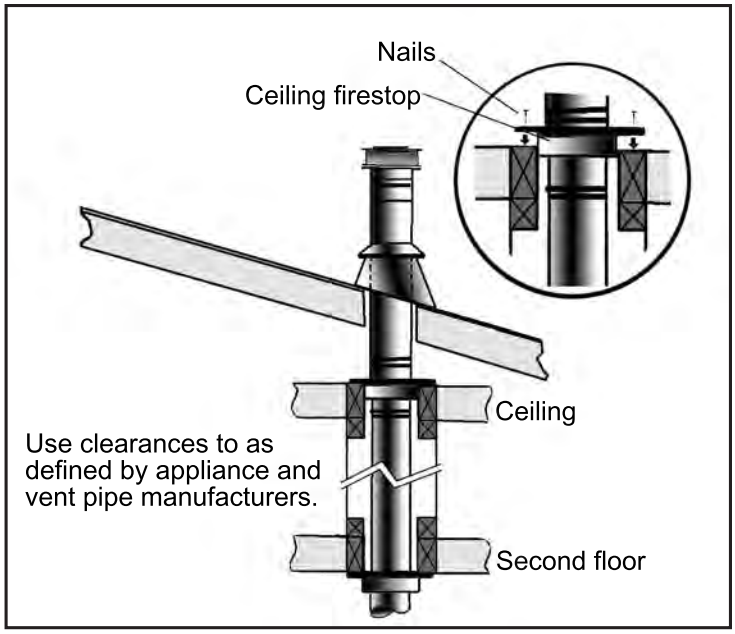

Figure 34: Multi-Story Vent Pipe Installation.

Initial Installation

QUALIFIED INSTALLERS ONLY

Ducting:

The option of ducting allows heat from the fireplace to be transferred to a different area. The maximum total length for the ducting is 20 feet (6.1 m). There are four (4) duct outlets that can be used (see Figure 35), however, the blower puts out 200 cfm no matter how many ducts are used. Therefore, the more ducts there are, the less air goes through each one. A short, straight duct maximizes its heating ability as air in the ducts is restricted by the length and number of bends in the pipe.

For the **first 24 inches (610 mm) of ducting, ½ inch (13 mm) of clearance is required.** After 24 inches (610 mm), the duct can be run with 0 inch (0 mm) clearance, though ½ inch (13 mm) is preferred. To avoid heat loss, insulate the duct whenever it passes through an unheated area (i.e. crawl space). Insulating the ducts elsewhere helps the efficiency of the ducting system.

Standard galvanized ducting and heat registers are to be used. Simply remove the desired cover plate from the outside of the firebox and attach a 6 inches (152 mm) starter ring. Make sure to foil-tape all seams to prevent leaking. Ensure all ducting meets local building codes.

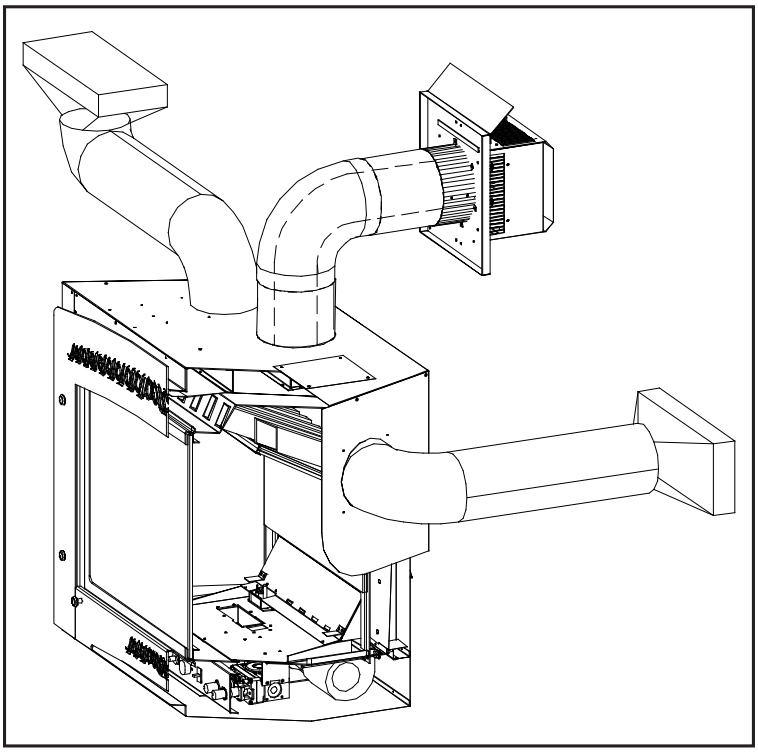

Figure 35. Heat Dumping Options.

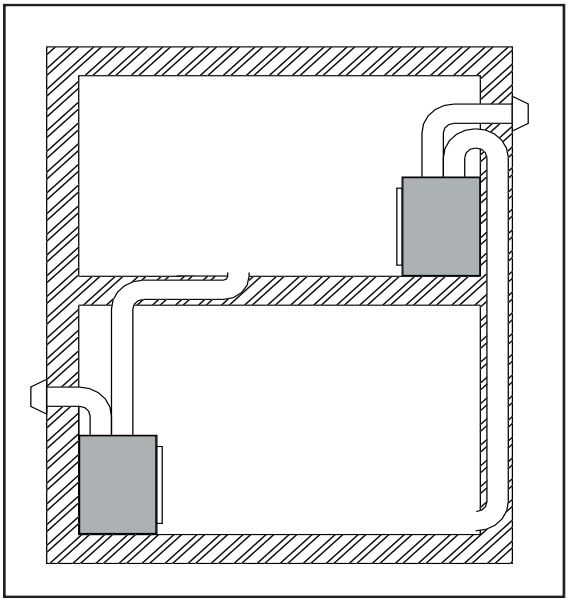

Figure 36. Ducting Options; ducted from upper floor to lower floor & from lower floor to upper floor.

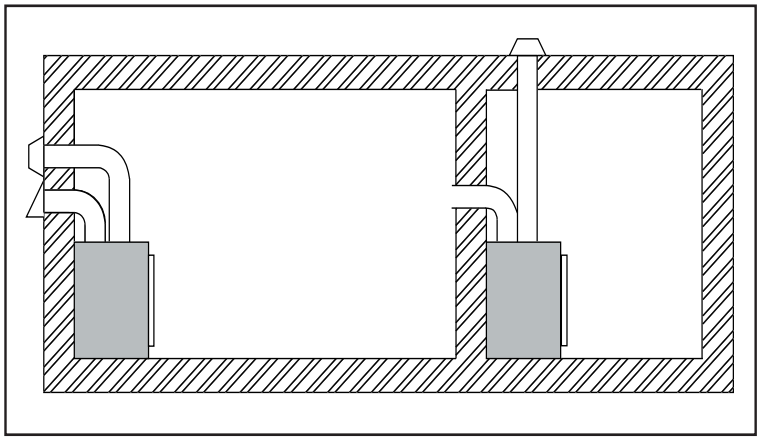

Figure 37. More Ducting Options; ducted to outside & to another room on an interior wall.

Initial Installation

QUALIFIED INSTALLERS ONLY

Electrical Requirements:

The fireplace must be electrically connected and grounded in accordance with local codes or, in the absence of local codes, with the current CSA C22.1 CANADIAN ELECTRICAL CODE Part 1, SAFETY STANDARDS FOR ELECTRICAL INSTALLATIONS, OR THE NATIONAL ELECTRICAL CODE ANSI / NFPA 70 in the US.

WARNING: The electrical grounding instructions must be followed. This appliance is equipped with a three-prong (grounding) plug for your protection against shock hazard, and should be plugged directly into a properly grounded three-prong outlet. **DO NOT** cut or remove the grounding prong from this plug.

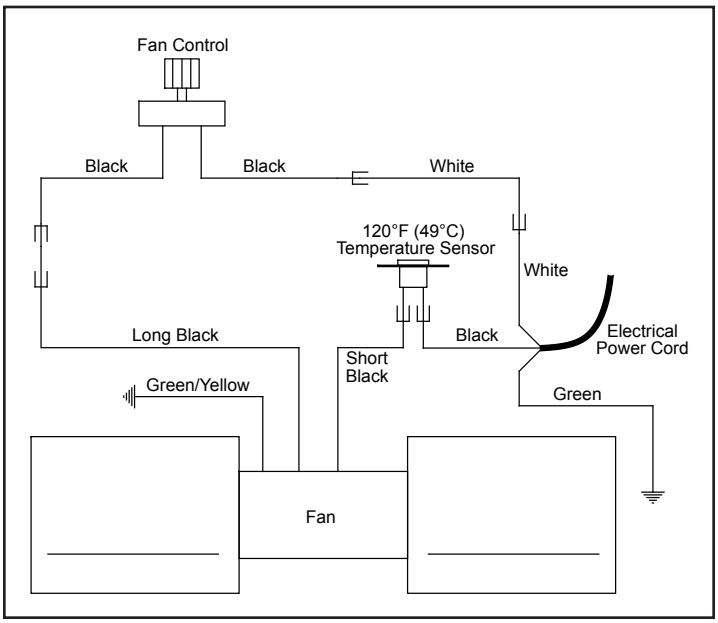

Figure 38. Wiring Diagram For Fan Control.

CAUTION: Label all wires prior to disconnection when servicing controls. Wiring errors can cause improper and dangerous operation. Verify proper operation after servicing.

Table 7. Recommended Thermostat Wire Size.

Wire Size	Max. Length
14 gauge	100 ft (30.48 m)
16 gauge	60 ft (18.29 m)
18 gauge	40 ft (12.00 m)
20 gauge	25 ft (7.62 m)
22 gauge	18 ft (5.49 m)

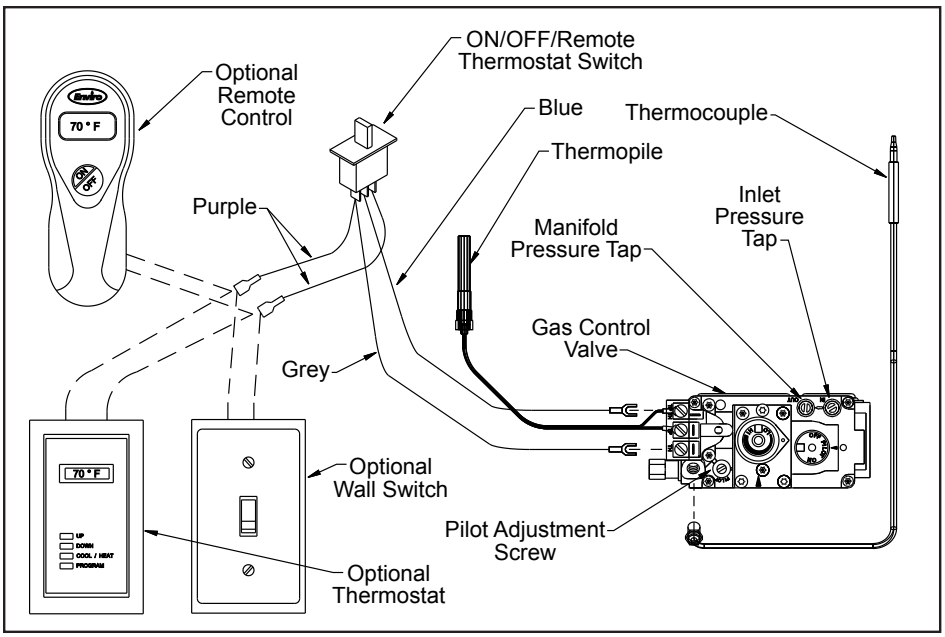

Figure 39. Wiring Diagram For Gas Valve.

Initial Installation

Gas Line Connection and Testing:

WARNING: Only persons licensed to work with gas piping may make the necessary gas connections to this appliance.

GAS LINE CONNECTION

- This stove is equipped with a certified flexible pipe located on the right side of the unit terminating in a ⅜" male NPT fitting. Consult your local authorities codes or the CAN/CGA B 149 (1 or 2) installation code in Canada, or in the USA gas installations follow either local codes or the current edition of the National Fuel Gas Code ANSI Z223.1.
- The efficiency rating of this appliance is a product thermal efficiency rating determined under continuous operating conditions and was determined independently of any installed system.

The appliance and its shutoff valves must be disconnected from the gas supply piping system during any pressure testing where the pressure exceeds ½ PSIG (3.45 KPa) or damage will occur to the valve.

The appliance must be isolated from the gas supply piping system by closing its individual manual shutoff valve during any pressure testing of the gas supply piping system at test pressures equal to or less than ½ psig (3.45 KPa).

Always check for gas leaks with a soap and water solution after completing the required pressure test.

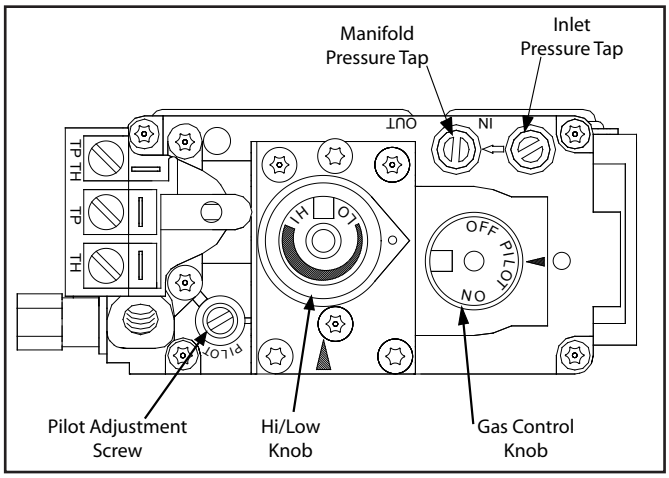

Figure 40: Fully Labeled Gas Valve.

TO TEST VALVE PRESSURES

The pressure taps are located on the left side of the valve

- Turn set screw 1 turn counter clockwise to loosen,
- Place 5/16" (8 mm) I.D. hose over pressure tap system.
- Check pressures using a manometer.
- When finished, release pressure, remove hose & tighten set screw.

Table 8: Pressure and BTU Information.

	Natural Gas	Propane
Orifice	#30 DMS	#47 DMS
Manifold Pressure	3.8" W.C. (0.95 KPa)	11.0" W.C. (2.74 KPa)
Min. Manifold Pressure	1.1" W.C. (0.27 KPa)	2.7" W.C. (0.67 KPa)
Max Supply Pressure	7.0" W.C. (1.74 KPa)	13.0" W.C. (3.28 KPa)
Min. Supply Pressure	5.0" W.C. (1.25 KPa)	12.0" W.C. (2.98 KPa)
Max BTU/hr Input	50,000 BTU/hr (14.65 KW)	46,650 BTU/hr (13.67 KW)
Min. BTU/hr Input	27,000 BTU/hr (7.91 KW)	23,750 BTU/hr (6.96 KW)

NEVER USE AN OPEN FLAME FOR LEAK TESTING.

Secondary Installation

Ceramic Brick Liner Removal:

WARNING: DO NOT INSTALL LINER IF UNIT IS HOT.

1. Remove glass door (see Maintenance And Service - Glass Door Removal)
2. Carefully remove the log set if it was installed.
3. Remove both side brick liners by sliding them out the front. Be careful not to scrape the liners on the baffle tabs at the top.
4. Hold the back of the top liner up while lifting the back liner off the air deflector ledge then out. Slide the top liner out from the lip on the baffle then remove it from the unit.
5. If the baffle needs to be removed use a T-20 screwdriver to loosen off but not remove the two (2) screws at the back of the baffle and remove the two (2) screws at the front of the baffle. Slide the baffle up over the back screws then out.

To install the liners follow steps 1 to 5 in reverse.

Important installation notes:

Ensuring the side brick liners are behind the baffle tabs and are flush against the firebox walls.

When sliding the baffle into place making sure to hook the back into place on the two loosened screws.

To install the log set follow the instruction in Log Set and Ember Installation.

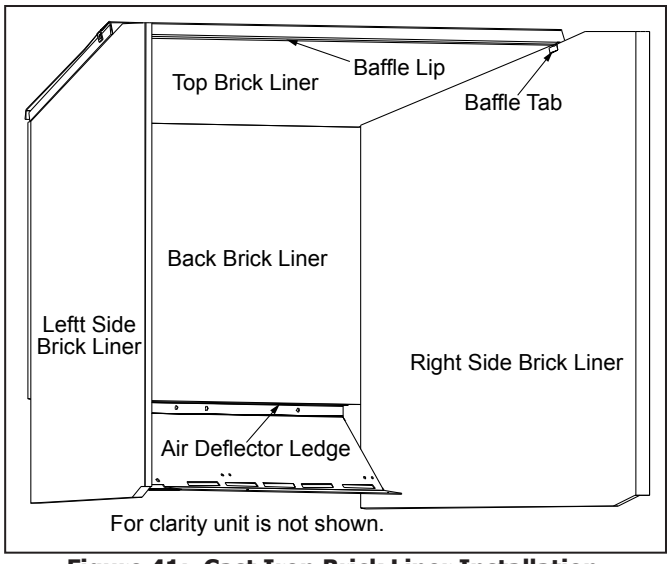

Figure 41: Cast Iron Brick Liner Installation.

Log Set and Ember Installation:

The placement of the logs is not arbitrary. If they are positioned incorrectly, the flames can be "pinched" and will not burn correctly. The burner (Figure 42) and a few of the logs come with locator pins, notches, and ledges which make alignment easier. The andirons and grate must be installed for the logs to be placed properly. Using the pictures provided, carefully set the logs in place (see Figures 43 through 49).

NOTE: The logs are fragile and should be handled gently.

Maintenance: Once a year the logs should be removed and checked for deterioration or large amounts of soot. A small amount on the bottom side of the logs is normal. Remove and replace the logs in the same manner described in this section.

If new/more embers and rock wool is required, contact your nearest ENVIRO dealer.

Never operate the fireplace with the glass door removed.

Figure 42: This is how the fire box looks with only the andirons and grate in place. This points out the three ledges at the back and three locator pins on the burner.

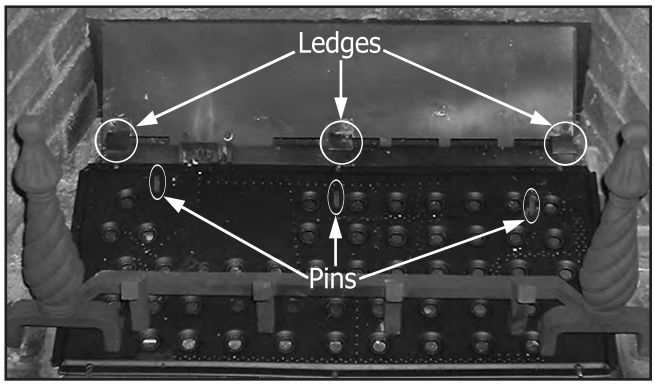

Figure 42. Placement of ledges and pegs in empty firebox.

Secondary Installation

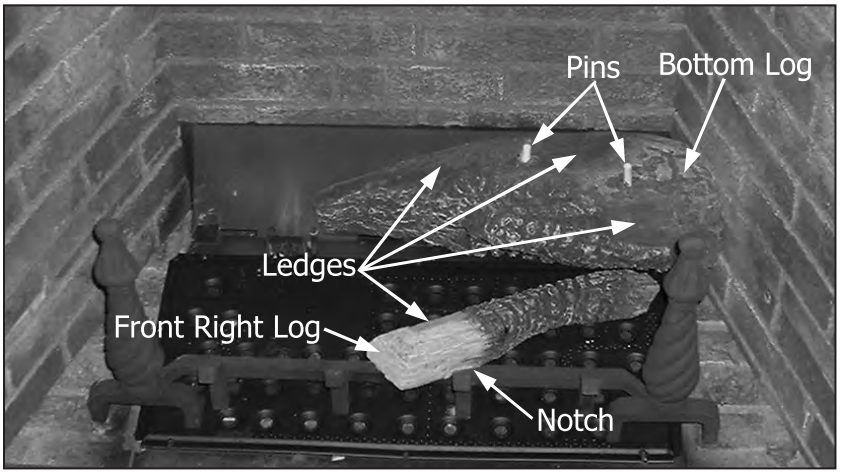

Figure 43. First Stage Log Set Installation

Figure 43: The first log to be placed is the **front right log**. The back end has a hole that sits on the right burner pin (see Figure 42) and the front has a notch that helps it rest on the center of the grate against one of the vertical bars. Second to be placed is the **bottom log**. The bottom log rests on the center and right ledge in the firebox (see Figure 42) and the large end must be flat against the right brick liner.

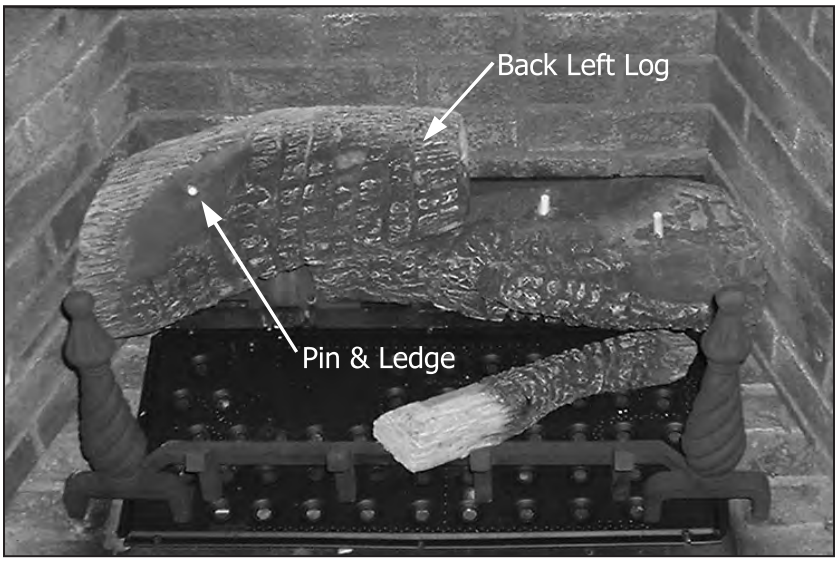

Figure 44. Second Stage Log Set Installation

Figure 44: The **back left log** rests on the left ledge in the firebox (see Figure 42) and the left ledge on the bottom log (see Figure 43). The large end must be flat against the left brick liner.

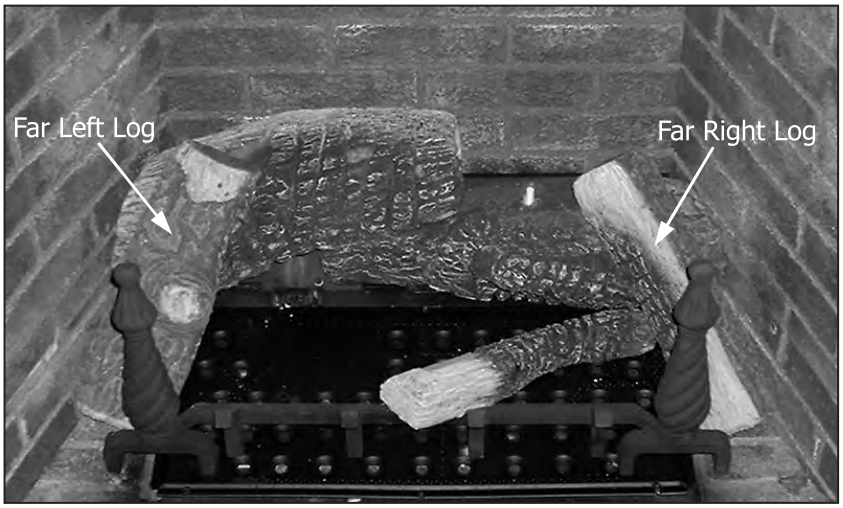

Figure 45. Third Stage Log Set Installation

Figure 45: The top of the **far left log** has a hole that rests on the pin and ledge of the back left log (see Figure 44). The bottom of the far left log rests against the base of the left andiron. The top of the **far right log** has a hole that rests on the right pin and ledge of the bottom log (see Figure 43) and the bottom of the far right log rests against the base of the right andiron.

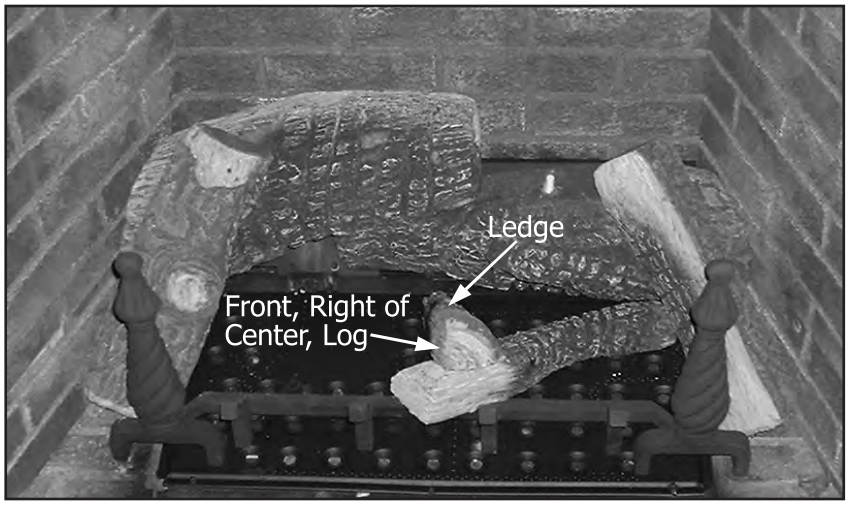

Figure 46. Fourth Stage Log Set Installation

Figure 46: Back end of the **front, right of center, log** has a hole that rests over the center burner pin (see Figure 42) and the front rest on the ledge of the front right log (see Figure 43).

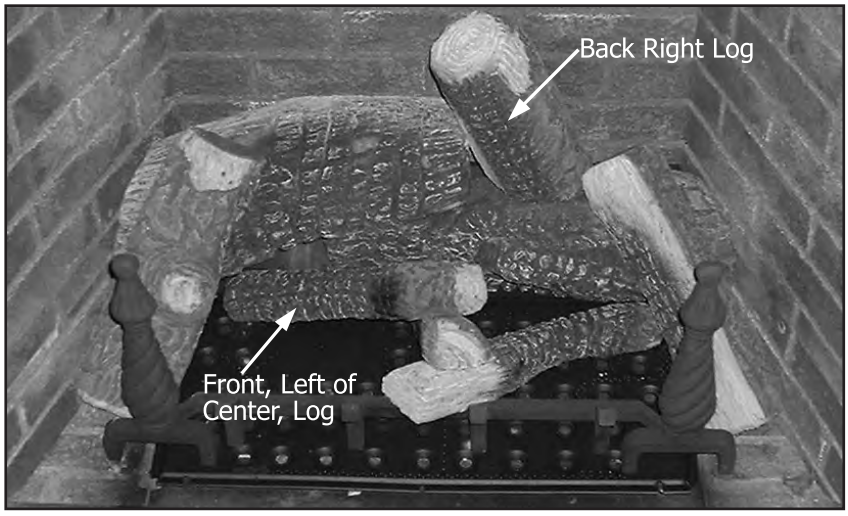

Figure 47. Fifth Stage Log Set Installation

Figure 47: The **back right log** sits on the center ledge and pin of the bottom log (see Figure 43) and leans against the back left log. The back end of the **front, left of center, log** has a hole that rests on the left burner pin (see Figure 42) and the front end rests on the ledge on the front, right of center, log (see Figure 46).

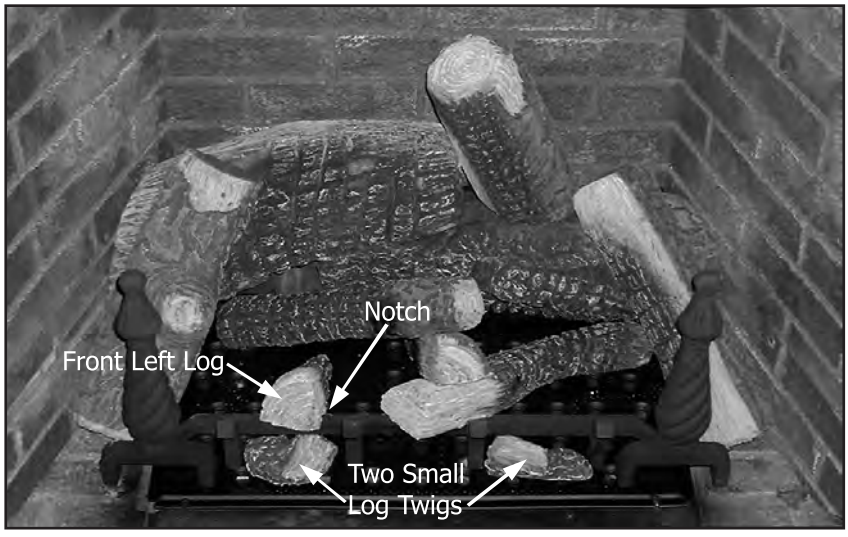

Figure 48. Final Log Set Arrangement

Figure 48: The **front left log** has a notch at it's wide end. This notch rests on the horizontal bar of the grate in the left gap. The back of the log rests freely on the burner where it will cover the least amount of burner holes. The **two small log twigs** are just placed under the grate, one in the left gap and the other in the right gap.

Figure 49: Once the logs are in place the embers can be placed onto and around the burner to create a realistic look. Bags of ceramic fiber embers and rock wool are provided. The ceramic fiber comes in chunks that are about 2" (51 mm) long. Place them irregularly around the burner. When there is a sparse but even layer of embers, spread the rock wool in the same manner. DO NOT pack this ember material as this could create an unsafe condition. The pieces should be lightly placed so they don't completely block any of the small burner ports. DO NOT allow any of the embers to rest against the pilot assembly.

Caution: Use only the type of ember material supplied with this fireplace. Due to the irregular size of the ember material, there may be more than required. Use of other foreign materials on the burners may create dangerous conditions.



Figure 49. Complete log set-up with embers.



Figure 50. DV50DX complete log set-up with embers burning.

Figure 50: The DV50DX burning with a good flame.

NOTE: While the glass is still removed, it is recommended that the gas line be purged by lighting the pilot.

When lighting the fireplace for the first time since the log set and embers have been installed / replaced, watch for ignition at ALL the burner ports. If a long delay is noticed, turn the appliance off and wait for it to cool down. Then remove the glass and rearrange the ember material, making sure none of the burner ports are blocked.

Troubleshooting

Problem	Possible Cause	Solution
The main burner does not ignite when called for.	The gas valve may not be on.	• Check that the gas control knob is in the "ON" position.
	Thermostat is not calling for heat.	• Adjust the thermostat several degrees above ambient temperature.
	Problem with gas valve.	• Use a DC voltmeter to measure the voltage across the TPTH and TP terminals. Main operator voltage: Open circuit ≥ 325mV Closed circuit ≥ 100mV • If voltage is not present, check the control circuit for proper operation. • If proper control system voltage is present, replace the gas control.
Spark will not light the pilot after repeatedly pressing the spark ignitor.	Defective piezo ignitor.	• Check connections to ignitor. • If ignitor connections are good but no spark, replace ignitor.
	Broken spark electrode.	• Check for broken ceramic insulation, replace electrode if broken.
	Misaligned spark electrode.	• If spark is not arcing from electrode to pilot, loosen the screws on the pilot base adjust and tighten.
Pilot will not remain lit.	Problem with thermocouple circuit.	• Check for proper connection of the thermocouple to the rear of the valve. If loose, fully tighten. • Check pilot for full flame impingement around thermocouple. If flame is too small, check gas pressure, adjust pilot rate screw, check pilot head for damage. • Check thermocouple voltage at valve. It must be greater than 5 mV. If low, replace thermocouple.
	Air in gas line (pilot dies while knob is depressed).	• Bleed line. • Check gas line pressure. • Contact dealer.
Burners will not remain lit.	Problem with thermopile circuit.	• Check gas line pressure . • Check for flame impingement on thermopile. If low, see "Pilot will not remain lit". • Check thermopile for minimum of 300 mV when burner is switched on. • Check wiring to thermostat for breaks.
Flame lifting	Leak in vent pipe	• Check for leaks in vent connections.
	Improper vent configuration	• Check vent configuration with manual.
	Terminal may be recirculating flue gases	• Check to see if terminal is on correctly. • May need to install high wind termination cap. • Contact dealer.
Glass fogs up	Normal Condition: after the appliance warms up the glass will clear. **Due to additives in gas, glass may get hazy during operation** Clean as needed.	
Blue Flames	Normal during start up: flames will yellow as the fireplace heats up.	
Flames are burning "dirty" or sooting	Flame impingement	• Check log positioning. • Increase primary air by opening the venturi shutter and/ or by opening the vent restrictor. See also "Burners will not remain lit."
Remote control doesn't work	Problem with the remote	• One or more of the batteries are dead. See remote control instructions.
	Problem with fireplace	• The on/off switch is turned to OFF. • The gas control valve is turned to PILOT or OFF. • The pilot has gone out.

Parts List - Components

Reference Number	Description	Part Number
1	120°F (49°C) Ceramic Fan Temperature Sensor	EC-001
2	S.I.T. Nova Valve Convertible	50-1421
3	Thermocouple	EC-009
3	Spark Electrode with Ignitor Cable	EC-011
3	Thermopile	EC-012
3	Pilot Orifice NG Threaded	EC-019
3	Pilot Orifice LP Threaded	EC-020
3	Pilot Gasket	EC-021
4	S.I.T. Piezo Ignitor	EC-023
5	Burner Switch	EC-025
6	Fan Controller - 115V	EC-039
	Domestic Power Cord - 115V	EC-042
	S.I.T. Pilot ⅛" Tube with End Ferrules	30-043
	Termination Cap	50-018
7	Blank Orifice #73	50-343
	Embers (need to order 2 sets)	50-491
8	Convection Blower - 115V	50-514
9	Door Latch Mechanism (requires 2 sets)	50-632
10	Door Handle Set (requires 2 sets)	50-635
11	Dual bulb door gasket - 10 feet (3.05 m)	50-634
11	Door, Glass & Gasket	50-718
12	Pan Burner	50-719
13	Control Panel	50-726
14	Burner Tray Complete	50-727
15	Ceramic Brick Liner	50-728
16	Grate	50-729
17	Andiron	50-730
	Log Set With Embers	50-731
	DV42DX Owner's Manual	50-741
	Large Ember Nuggets Only	50-832
18	Three Flame Pilot Hood	50-925
	Convertion Kit from LG to NG Convertible	50-1428
	Convertion Kit from NG to LG Convertible	50-1429
	S.I.T. Valve Conversion Screw With O-Ring	50-1450
	S.I.T. Valve Conversion Screw Cap	50-1451

Parts Diagram - Components

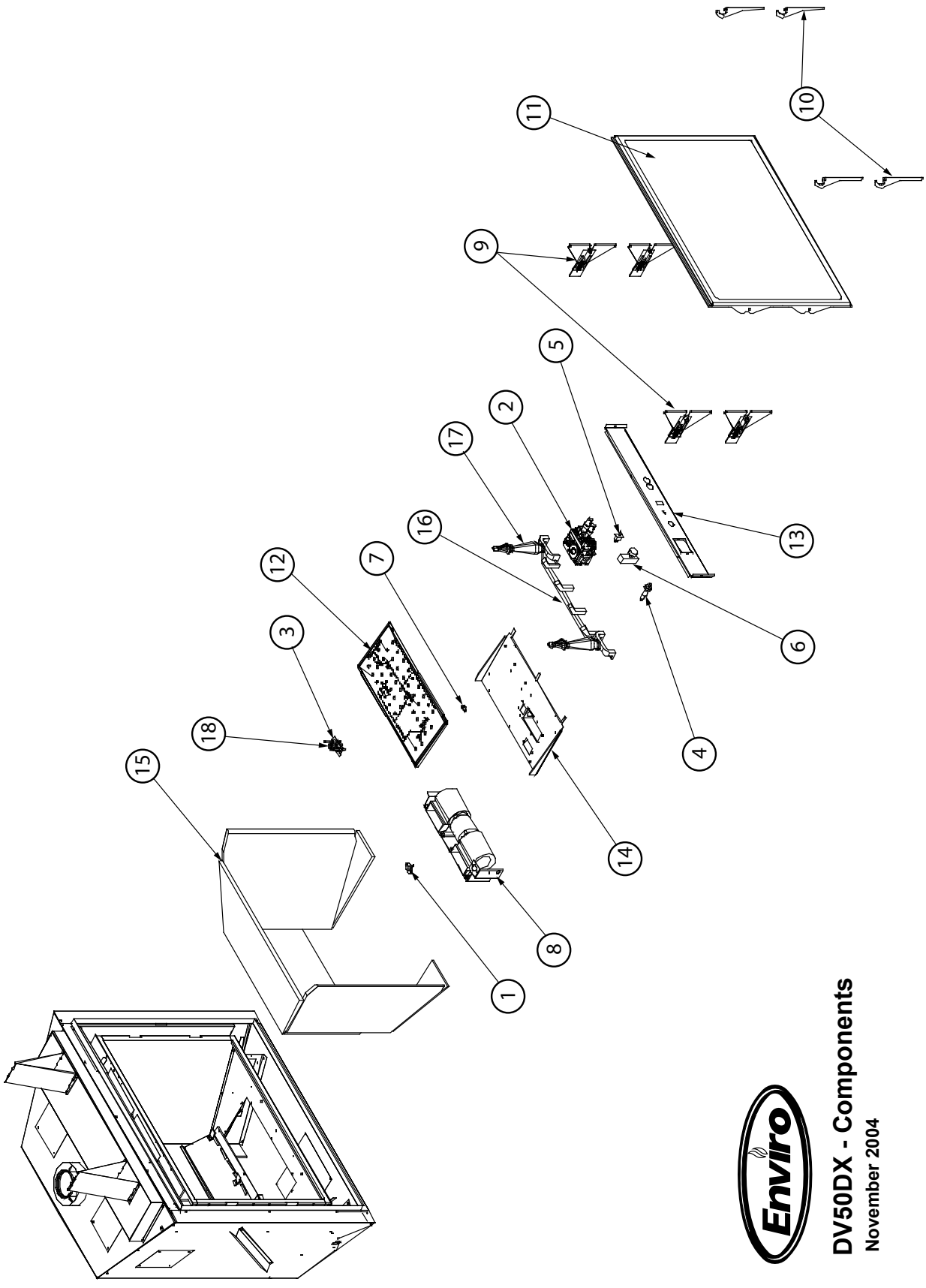

Parts List- Options

Reference Number	Options	Part Number
1	The Lodge - Painted Charcoal Face With Plated Brushed Nickel Louvres & Knobs	50-702
2	The Chalet Painted Flat Arched Face - Metallic Charcoal	50-703
2	The Chalet Plated Flat Arched Face - Gold	50-704
2	The Chalet Plated Flat Arched Face - Brushed Nickel	50-705
2	The Chalet Plated Flat Arched Face -Antique Copper	50-706
3	The Cottage Bow Face Painted Charcoal - (No Trim)	50-707
	The Cottage Trim Kit - Charcoal (Inset Piece, Carriage Bolts, Top & Bottom Trim)	50-708
	The Cottage Trim Kit - Antique Copper (Inset Piece, Carriage Bolts, Top & Bottom Trim)	50-709
	The Cottage Trim Kit - Pewter (Inset Piece, Carriage Bolts, Top & Bottom Trim)	50-710
	The Cottage Trim Kit - Gold (Inset Piece, Carriage Bolts, Top & Bottom Trim)	50-711
4	The Cape Cod Arch With Opening Doors & Fire Screen Painted	50-712
	On/Off Remote Control Kit	50-559
	Programmable Wall Mounted Remote Control	50-583
	The Lodge Steel Template	50-725
	The Chalet Steel Template	50-722
	The Cottage Steel Template	50-723
	The Cape Cod Steel Template	50-724

Parts Diagram - Options

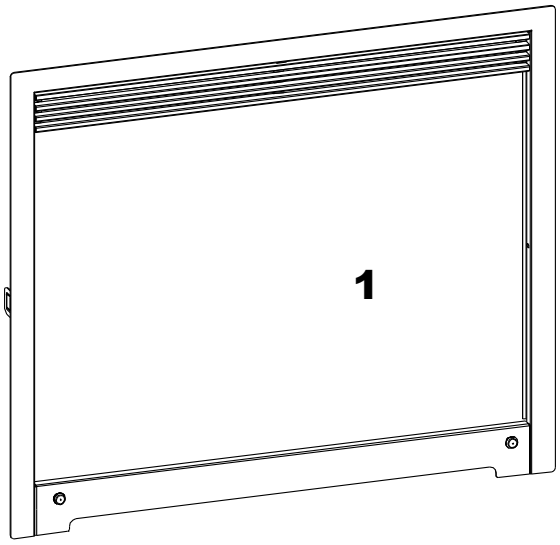

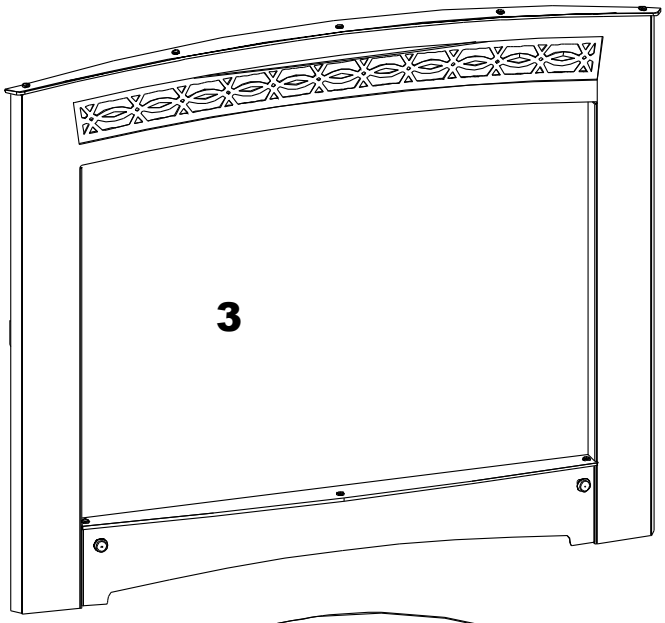

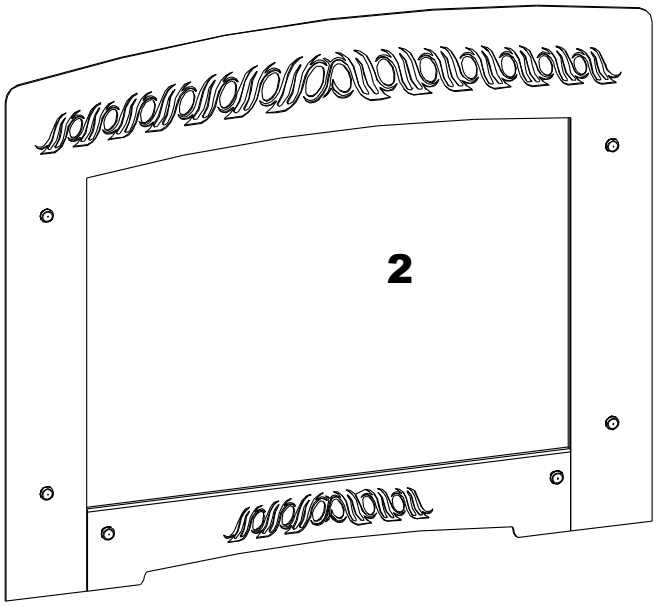

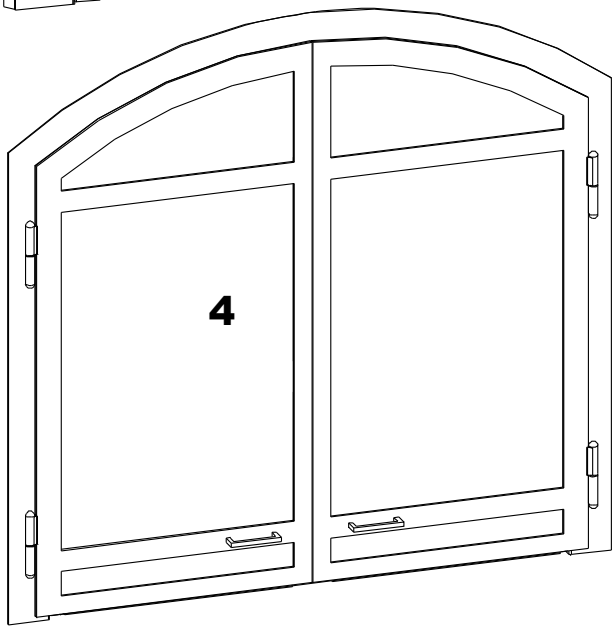

Warranty

Sherwood Industries Ltd. offers a Limited Lifetime Warranty on this gas product. This Limited Lifetime Warranty covers the appliance for a period of seven years from the date of installation. This warranty applies only to the original owner in the original location.

Covered under the lifetime warranty are the chassis and the heat exchanger. These steel components are covered against manufacturer's defects for seven years and the labour for the first year. The following exclusions apply: over-firing due to incorrect setup or tampering, damage caused by incorrect installation, usage or abuse. The unit must be properly installed by a qualified technician or installer, and must meet all local and national gas and building code requirements.

Under the Limited Lifetime Warranty, the following components are also covered: log set, burners and glass. The following exclusions apply:

Plated Finish: Damage caused by scratching, marring, chemicals, fingerprints, abrasive cleaners or discoloration with age. Items with Antique Copper that have had a green discoloration of the finish. If discoloration occurs, please follow the cleaning instructions as outlined in the "Maintenance And Service" section.

Glass: Damage caused by the use of harsh or abrasive cleaners, striking the glass, surface contaminants

Log Set: Damage caused by incorrect handling or misuse

Burners: Damage caused by improper or continuous operation under incorrect conditions

Sherwood Industries Ltd. offers a two-year warranty on all the electrical components and gas components, against manufacturing defects. Paint is also covered against flaking. This offer includes parts and labour for one year, and parts only thereafter.

Your dealer shall make all claims under this warranty in writing. When filing a warranty claim please complete the following information on an official warranty claim form:

TO THE DEALER:

Name, address and telephone number of purchaser and date of purchase, date of installation, name of installer and dealer, nature of complaint, defects or malfunction, description and part number of any parts replaced.

TO THE DISTRIBUTOR:

Sign and verify that work and information are correct.

This warranty covers defects in materials and workmanship only if the product has been installed according to the manual's instructions. If the product is damaged or broken as a result of misuse or mishandling, the warranty does not apply. The warranty does not cover removal and reinstallation costs.

Sherwood Industries Ltd. reserves the right to repair or replace the defective product. The shipping costs are to be paid by the consumer. All warranties by the manufacturer are set forth and no claim shall be made against the manufacturer on any oral warranty or representation.

Sherwood Industries Ltd. and its' employees or representatives will not assume any damages, either directly or indirectly, caused by improper usage, operation installation, servicing or maintenance of this appliance.

Sherwood Industries Ltd. reserves the right to make changes without notice. Please complete and mail the warranty registration card and have the installer fill in the installation data sheet in the back of the manual for warranty and future reference.

Installation Data Sheet

The following information must be recorded by the installer for warranty purposes and future reference.

NAME OF OWNER:

_____

ADDRESS:

_____

_____

_____

PHONE:_____

NAME OF DEALER:

_____

ADDRESS:

_____

_____

_____

PHONE:_____

MODEL:_____

SERIAL NUMBER:_____

DATE OF PURCHASE: _____ (dd/mm/yyyy)

DATE OF INSTALLATION:_____(dd/mm/yyyy)

☐ NATURAL GAS (NAT) ☐ PROPANE(LPG)

INLET GAS PRESSURE:_____in wc

MAIN BURNER ORIFICE:_____# DMS

PILOT ORIFICE #_____OR_____in diam.

INSTALLER'S SIGNATURE:

_____

NAME OF INSTALLER:

_____

ADDRESS:

_____

_____

_____

PHONE:_____

MANUFACTURED BY:
SHERWOOD INDUSTRIES LTD.
6782 OLDFIELD RD. SAANICHTON, BC, CANADA V8M 2A3
www.envirofire.biz
March 20, 2006
C-11079