SHERWOOD INDUSTRIES IS AN ENVIRONMENTALLY RESPONSIBLE COMPANY. THIS MANUAL IS PRINTED ON RECYCLED PAPER.

PLEASE KEEP THESE INSTRUCTIONS FOR FUTURE REFERENCE

Enviro

PELLET STOVE

Empress

Fireplace Insert

OWNER'S MANUAL



Contact your building or fire officials about restrictions and installation inspection requirements in your area.

PLEASE READ THIS ENTIRE MANUAL BEFORE INSTALLATION AND USE OF THIS PELLET BURNING ROOM HEATER. FAILURE TO FOLLOW THESE INSTRUCTIONS COULD RESULT IN PROPERTY DAMAGE, BODILY INJURY, OR EVEN DEATH.

50-1385

Table of Contents

Introduction.....3
- Rating Label Location.....3
- Pellet Quality.....3
- Automatic Safety Features.....3
- Important Safety Data.....4
- Safety Warnings And Recommendations.....4

Operating Instructions.....6
- Slider/Damper Setting.....6
- Stove Controls.....7
- Operating Your Pellet Stove.....8
- Turning Your Pellet Stove Off.....8

Routine Cleaning and Maintenance.....9
Warranty.....12
Installation Data Sheet.....13

Introduction

*** This manual is designed for the home owner in conjunction with the technical manual. ***

Rating Label Location:

The rating label is located on the hopper top behind the surround panel.

Pellet Quality:

Pellet quality is important, please read the following:

Your enviro pellet stove has been designed to burn wood pellets only. Do not use any other type of fuel, as this will void any warranties stated in this manual.

The performance of your pellet stove is greatly affected by the type and quality of wood pellets being burned. As the heat output of various quality wood pellets differs, so will the performance and heat output of the pellet stove.

CAUTION: It is important to select and use only pellets that are dry and free of dirt or any impurities such as high salt content. Dirty fuel will adversely affect the operation and performance of the unit and will void the warranty.

ASH: The ash content of the fuel and operation of your stove will directly determine the frequency of cleaning. The use of high ash fuels may result in the stove needing to be cleaned daily. A low ash fuel may allow longer intervals between cleaning.

CLINKERING: [clinkers are silica (sand) or other impurities in the fuel that will form a hard mass during the burning process]. This hard mass will block the air flow through the Burn Pot Liner and affect the performance of the stove. Any fuel, even approved types, may tend to clinker. Check the Burn-Pot Liner daily to ensure that the holes are not blocked with clinkers. If they become blocked, remove the liner (when the unit is cold) and clean/scrape the clinkers out. Clean the holes with a small pointed object if required. Refer to the section Routine Cleaning and Maintenance.

PELLET FEED RATES: Due to different fuel densities and sizes, pellet feed rates may vary. This may require an adjustment to the slider damper setting or to the auger feed trim setting on Low.

Since Sherwood Industries Ltd. has no control over the quality of pellets that you use, we assume no liability for your choice in wood pellets.

Store pellets at least 36” (1 m) away from the pellet stove.

Automatic Safety Features:

Your pellet Stove has the following safety features:

A) The stove will shut off when the fire goes out and the exhaust temperature drops below 120 °F (49°C).

B) The stove has a high temperature safety switch. If the temperature on the hopper reaches 200 °F (93 °C) the auger will automatically stop and you will get a #2 flash code, and the stove will shut off when the exhaust temperature cools. If this happens call your local dealer to reset the 200 °F (93 °C) high limit switch. FIND THE REASONS WHY THE UNIT OVERHEATED.

C) The unit is equipped with a vacuum switch to monitor the venting and the build up of ash in the burn pot; if either becomes blocked the vacuum switch will turn off the auger and the stove will shut off.

Introduction

Important Safety Data:

Please read this entire Owner's Manual before installing or operating your ENVIRO Pellet Stove. Failure to follow these instructions may result in property damage, bodily injury or even death. Contact your local building or fire official to obtain a permit and any information on installation restrictions and inspection requirements for your area.

To prevent the possibility of a fire, ensure that the appliance is properly installed by adhering to the installation instructions. An ENVIRO dealer will be happy to assist you in obtaining information with regards to your local building codes and installation restrictions.

The stove's exhaust system works with negative combustion chamber pressure and a slightly positive chimney pressure. It is very important to ensure that the exhaust system be sealed and airtight. The ash pan and viewing door must be locked securely for proper and safe operation of the pellet stove.

Do not burn with insufficient combustion air. A periodic check is recommended to ensure proper combustion air is admitted to the combustion chamber. Setting the proper combustion air is achieved by adjusting the slider damper located in the front of the unit under the ash pan.

Soot or creosote may accumulate when the stove is operated under incorrect conditions such as an extremely rich burn (black tipped, lazy orange flames).

If you have any questions with regard to your stove or the above-mentioned information, please feel free to contact your local dealer for further clarification and comments.

Safety Warnings And Recommendations:

Caution: Do not connect to any air distribution duct system.

Do not burn garbage or flammable fluids such as gasoline, naptha or engine oil.

Unit hot while in operation. Keep children, clothing and furniture away. Contact may cause skin burns.

FUEL: This pellet stove is designed and approved to only burn wood pellet fuel with up to 3% ash content. Dirty fuel will adversely affect the operation and performance of the unit and may void the warranty. Check with your dealer for fuel recommendations.

THE USE OF CORDWOOD IS PROHIBITED BY LAW.

SOOT: Operation of the stove with insufficient combustion air will result in the formation of soot which will collect on the glass, the heat exchanger, the exhaust vent system, and may stain the outside of the house. This is a dangerous situation and is inefficient. Frequently check your stove and adjust the slider/damper as needed to ensure proper combustion. **See: Operating Instructions - Slider / Damper Setting.**

CLEANING: There will be some build up of fly ash and small amounts of soot in the exhaust. This will vary due to the ash content of the fuel used and the operation of the stove. It is advisable to inspect and clean the exhaust vent semi-annually or every two tons of pellets.

ASHES: Disposed ashes should be placed in a metal container with a tight-fitting lid. The closed container of ashes should be on a non-combustible floor on the ground, well away from all combustible materials pending final disposal. The ashes should be retained in the closed container until all cinders have thoroughly cooled before disposing of them.

ELECTRICAL: The use of a surge protected power bar is recommended. The unit must be grounded. The grounded electrical cord should be connected to a standard 120 volts, 60 hertz electrical outlet and also must be accessible. If this power cord should become damaged, a replacement power cord must be purchased from the manufacturer or a qualified ENVIRO dealer. Be careful that the electrical cord is not trapped under the appliance and that it is clear of any hot surfaces or sharp edges. This unit's maximum power requirement is (4.1 Amps) 500 watts.

GLASS: Do not abuse the glass by striking or slamming the door. Do not attempt to operate the stove with broken glass. The stove uses ceramic glass. Replacement glass must be purchased from an ENVIRO dealer. Do not attempt to open the door and clean the glass while the unit is in operation or if glass is hot. To clean the glass, use a soft cotton cloth and mild window cleaner, gas or wood stove glass cleaner, or take a damp paper towel and dip into the fly ash. This is a very mild abrasive and will not damage the glass.

FLAMMABLE LIQUIDS: Never use gasoline, gasoline-type lantern fuel, kerosene, charcoal lighter fluid, or similar liquids to start or "freshen up" a fire in the heater. Keep all such liquids well away from the heater while it is in use.

SMOKE DETECTOR: Smoke detectors should be installed and maintained in the structure when installing and operating a pellet burning appliance.

OPERATION: The ash pan and door must be closed securely for proper and safe operation of the pellet stove. Also ensure all gaskets on the door are checked and replaced when necessary.

KEEP ASH PAN FREE OF RAW FUEL.

DO NOT PLACE UNBURNED OR NEW PELLET FUEL IN ASH PAN. A fire in the ash pan may occur.

If you have any questions with regards to your stove or the above-mentioned information, please feel free to contact your local dealer for further clarification and comments.

SINCE SHERWOOD INDUSTRIES LTD. HAS NO CONTROL OVER THE INSTALLATION OF YOUR STOVE, SHERWOOD INDUSTRIES LTD. GRANTS NO WARRANTY IMPLIED OR STATED FOR THE INSTALLATION OR MAINTENANCE OF YOUR STOVE. THEREFORE, SHERWOOD INDUSTRIES LTD. ASSUMES NO RESPONSIBILITY FOR ANY CONSEQUENTIAL DAMAGE(S).

SAVE THIS INSTRUCTION MANUAL FOR FUTURE REFERENCE

Operating Instructions

Slider/Damper Setting:

This is used to regulate the airflow through the pellet stove.

THE SLIDER / DAMPER MUST BE SET AT TIME OF INSTALLATION.

A Qualified Service Technician or Installer must set the Slider Damper.

• If the fire should happen to go out and the heat output indicator has been set on the lowest setting, the Slider Damper should be moved to the left slightl, lessen the air flow into the firebox.

• If, after long periods of burning, the fire builds up and overflows the burn pot or there is a build up of clinkers, this would be a sign that the pellet quality is poor, this requires more primary air, the slider damper must be moved to the right to give the fire more air.

The easiest way to make sure that an efficient flame is achieved is to understand the characteristics of the fire.

- A tall, lazy flame with dark orange tips requires more air – Push Right
- A short, brisk flame, like a blowtorch, has too much air – Push Left
- If the flame is in the middle of these two characteristics with a bright yellow/orange, active flame with no black tips then the air is set for proper operation.

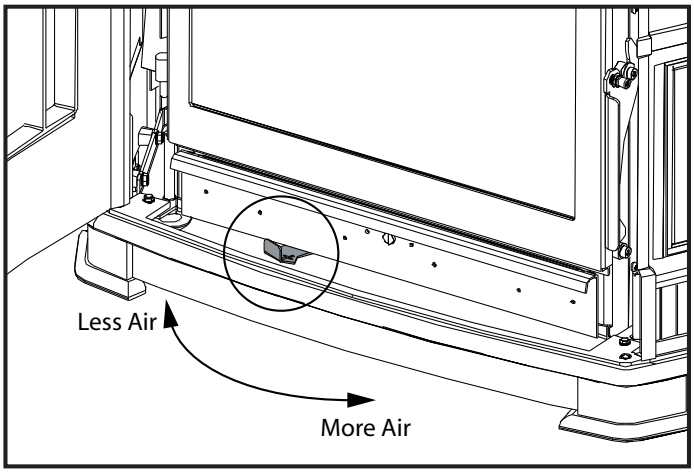

Figure 1: Slider / damper positions.



Figure 2: Efficient Flame.

Operating Instructions

The combustion exhaust blower is a variable speed blower controlled by the heat output setting. This blower will increse or decrease the blower speed as the heat output setting is turned up or down.

SPECIAL NOTES:

Pellet quality is a major factor in how the pellet stove will operate. If the pellets have a high moisture content or ash content the fire will be less efficient and has a higher possibility of the fire building up and creating clinkers (hard ash build-up). If this happens, move the Slider / Damper to the right slightly to increase the air flow to the fire.

Stove Controls:

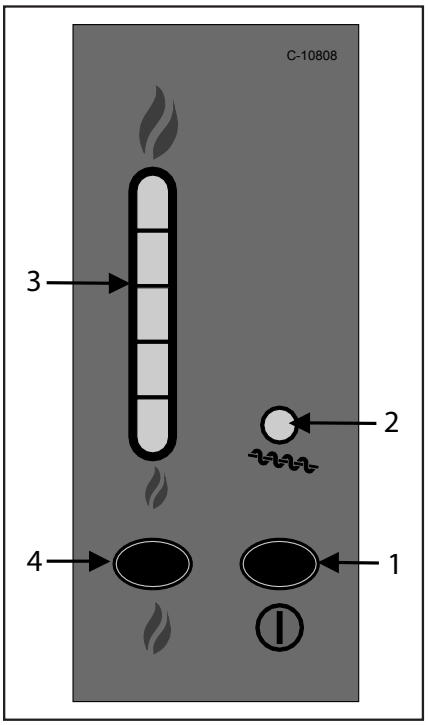

Figure 3: Control panel.

1. **ON/OFF BUTTON:** Used to turn the unit ON and OFF.
2. **AUGER PULSE LIGHT:** This light will flash in conjunction with the auger.
3. **HEAT OUTPUT INDICATOR:** Shows the present heat output setting.
4. **HEAT LEVEL ADJUSTMENT:** When pressed, will change the heat setting of the unit from low to high. the fan runs up and down with the heat seting.

Notes:

- The convection blower speed will vary automatically with the feed rate.
- Due to varying fuel qualities this pellet stove may not operate on lower Heat Level settings. If your unit goes out when on a low setting move the heat level up to a higher setting.
- The lowest and highest heat levels on this pellet stove are used for adjusting and accommodating for different pellet sizes and the varying energy produced by the fuels. The size of the pellets will change the volume of fuel being fed.
- The unit should be run at a setting where the least amount of cleaning of the burn pot is needed.

Operating Instructions

Operating Your Pellet Stove:

PRE-BURN INSTRUCTIONS: The burn pot liner holes must be clear and the liner installed correctly against the ignitor tube with the large vertical lip at the front for proper operation. Check the hopper for enough pellets to start the unit.

DO NOT OPERATE THE UNIT WITH THE DOOR OR ASH PAN OPEN.

MANUAL MODE:

To START: Press the ON / OFF button. The stove will turn on, it may take fifteen (15) seconds for the lights on the control board to come on. The Auger Light will flash with each pulse of the auger (the Auger Feed Rate is pre-programmed during start-up). The Heat Level Indicator will show the Heat Level that the stove will run at after start-up and can now be set.

If this is the first time the unit has been started or the unit has run out of fuel, a handful of pellet should be placed in the burn pot.

To OPERATE: When a fire has been established (after approximately 10 - 15 minutes) and the Auger Light will start to flash to the corresponding Heat Level setting. The Heat Level will now be at the desired Heat Level Output setting.

The convection blower (room air blower) will turn on. The speed of this blower is controlled by the setting of the heat level output indicator.

When operating on LOW HEAT LEVEL, the feed rate can be adjusted, using the auger trim, for different quality fuels. These settings can be used if the fire keeps going out on low (for poor quality fuel) or if the low setting is too hot for the room. This button is on the Motherboard behind the surround panel.

THERMOSTAT / SWITCH MODE:

INITIAL START-UP: See above

OPERATION - HI / LOW mode: When the thermostat contacts are closed the stove settings are adjustable as per Manual Mode (see above). When the thermostat contacts open, the circuit board will take control of the settings. The stove will drop down to a low burn until the thermostat contacts close again. This low burn setting can be adjusted for different fuel qualities. The stove will come back to the previous HEAT LEVEL setting when the thermostat contacts close again.

OPERATION – ON / OFF mode: When the thermostat contacts close, the unit will light automatically. Once up to temperature, the stove operates the same as in manual mode (see above). When the thermostat contacts open, the unit automatically begins its shutdown routine. The stove will re-light when the thermostat contacts close again.

Turning Your Pellet Stove Off:

• MANUAL and HI / LOW mode: To turn the unit OFF, simply press the ON / OFF button. This will stop the feed of pellets. The blowers will continue to operate and cool the stove down. When cool enough, the stove will turn off.

• ON / OFF mode: To turn the unit OFF, turn the thermostat down or off.

DO NOT unplug unit while Combustion fan is operating.
This will lead to smoke escaping from the stove.

Routine Cleaning and Maintenance

The following list of components should be inspected and maintained routinely to ensure that the appliance is operating at its optimum and giving you excellent heat value:

2-3 Days / Weekly	Semi-annually or 2 Tons of Fuel
Burn Pot and Liner	Fresh Air Intake
Door Latch	Exhaust Passages
Door Glass	Exhaust Vent
Ash pan and Door gaskets	Blower Mechanisms
Ash Pan	Behind firebox liners
Heat exchanger	All Hinges
Inside Firebox	Post Season Clean-up

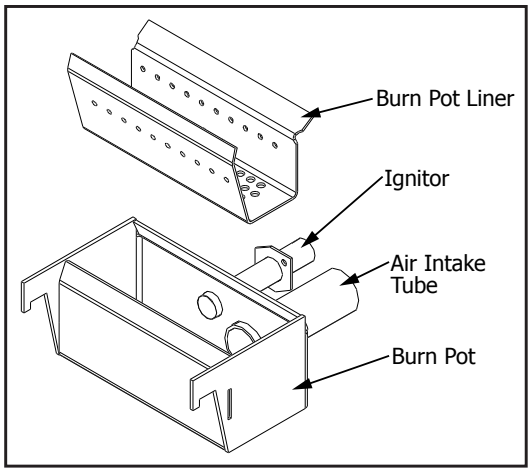

Figure 4: Burn pot assembly.

TOOLS REQUIRED TO CLEAN UNIT

- Torx T-20 Screwdriver
- Brush
- Soft Cloth
- 5/16" Wrench or Socket
- Vacuum with fine filter bag

BURN POT AND LINER (2-3 days)

Cleaning of the burn pot and liner must only be done when stove is cold. To remove the burn pot and burn pot liner, open the door located on the right-hand side of the stove. Swing the door open. Lift the liner from the burn pot. Lift the burn pot from the firebox by gently lifting up the front of the burn pot, then sliding the assembly from the air intake tube and the ignitor cartridge.

This is the 'pot' where the pellets are burned. Every two to three days (when the unit is cold), remove the burn-pot liner from the stove and inspected it to ensure proper air flow through the liner. **Failure to keep the liner clean may cause a build up of fuel past the burn pot liner and up the drop tube. This will cause the auger to jam and may result in pellets burning in the drop tube and hopper**. Using a metal scrapper, remove material that has accumulated or is clogging the liner's holes. Then dispose of the scrapped ashes from the liner and from inside the burn-pot. Place the burn-pot back into the stove, making sure that the pipes are properly inserted into the burn pot. Place the liner back into the burn-pot, making sure that the ignitor hole in the liner is aligned with the ignitor tube. Pushing the liner up against the ignitor tube.

If, after long periods of burning, the fire continually builds up and overflows the burn pot or there is a build up of clinkers, this is an indication that the pellet fuel quality is poor or the stove may need cleaning. Check the stove for ash build up (clean if required) and adjust the slider / damper to produce the proper clean combustion.

DOOR LATCH (2-3 days)

Check the door latch every time the door is opened or closed to ensure proper engagment.

DOOR GLASS CLEANING (When needed)

Cleaning of the glass must only be done when stove is cold. Open the door by lifting the handle. The glass can be cleaned by wiping down the outside and inside of the glass with a dry soft cloth.

If the glass has build up that can not be removed with only the cloth, clean the glass using paper towel and a glass cleaner, a special glass cleaner can be purchased through most dealers. If a glass cleaner is not available, use a damp paper towel dipped in fly ash to clean the glass. After the glass has been cleaned use the dry soft cloth to wiping down the outside and inside of the glass.

Routine Cleaning and Maintenance

ASH PAN AND DOOR GASKETS (weekly)
After extended use the gasketing may come loose. To repair this, glue the gasketing on using high-temperature fiberglass gasket glue available from your local ENVIRO dealer. This is important to maintain an airtight assembly.

ASH PAN (2-3 days)
The ash pan is located under the door. To remove the ash pan, simply turn the latch with a large standard blade screwdriver and pull out towards the front. Dump the ashes into a metal container stored away from combustibles. Vacuum the ash pan and inside the firebox. CAUTION: BECAUSE THE FLY ASH IS VERY FINE, THE USE OF A FINE FILTER VACUUM BAG WILL BE REQUIRED TO PREVENT ASH FROM BEING BLOWN BACK INTO THE ROOM. Please pay special attention that there are no hot ashes in the firebox or there could be a possibility of a fire hazard inside the vacuum cleaner. Place all hot ashes into a non-combustible container.
Monitor the ash level every week. Remember that different pellet fuels will have different ash contents. Ash content is a good indication of fuel efficiency and quality. Refer to "Introduction - Safety Warnings And Recommendations" for disposal of ashes. **It is important to latch the ashpan tightly whe re-installing it.**

DO NOT PLACE UNBURNED OR RAW PELLET FUEL IN ASH PAN.

HEAT EXCHANGER (weekly)
Clean away any fly ash that may have collected on the heat exchanger by opening the door and brushing off the fins on the inside of the firebox. As different types of pellets produce different amounts of ash, cleaning of the fins should be done on a regular basis to enable the unit to run efficiently.

FRESH AIR INTAKE (season)
Inspect periodically to be sure that it is not clogged with any foreign materials.

EXHAUST PASSAGES (season)
Removal of the firebox backing for bi-annual cleaning (refer to Figure 5):

- Open the door by lifting the handle.
- Remove the burn pot and burn pot liner.
- **Lubricate all screws with penetrating oil.**
- Remove the two (2) screws that hold each brick liner retainer in place. Remove side brick liners by sliding them forward then out.
- Pull the center panel out.
- Vacuum and clean thoroughly.

Installation of firebox backing:

- Insert center panel with backing.
- Place the two (2) side panels back into the firebox and reinstall the two (2) retainers using two (2) screws on each side.
- Replace the burn pot and burn pot liner
- Close the glass door and secure.

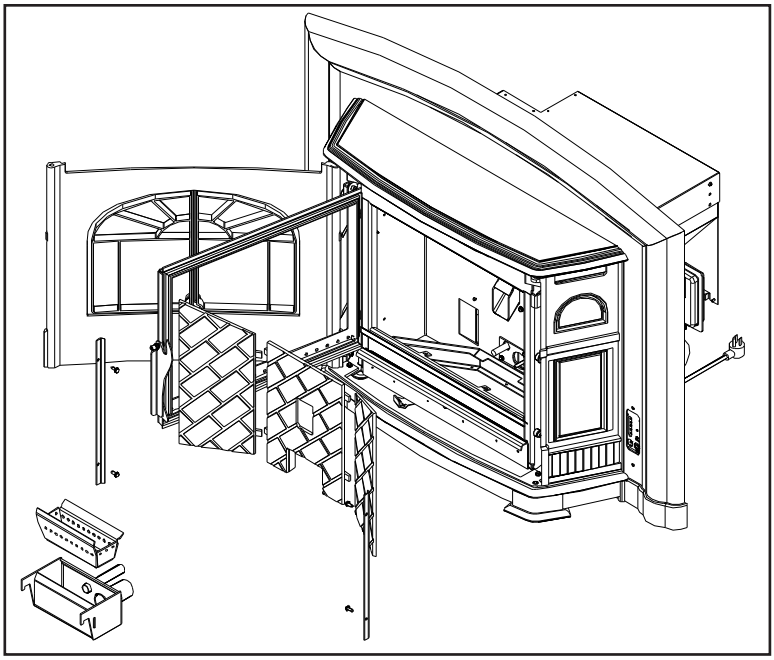

Figure 5: Firebox Components Removal.

Routine Cleaning and Maintenance

EXHAUST VENT (season)

This vent should be cleaned every year or after two (2) tons of pellets. We recommend contacting your dealer for professional cleaning. To clean the vent pipe, run a chimney cleaning brush through the pipe. Open the bottom of the "T" to dump the ash, then vacuum as much of the ash out of the vent pipe as possible.

BLOWER MECHANISMS (season)

Unplug the stove and pull out the unit to access the two blowers. Vacuum all dust from motors and lubricate the convection motor. Check gaskets and replace if needed.

ALL HINGES (season)

Check all the hinges on the unit to ensure proper movement.

POST SEASON CLEAN-UP

Once you are finished using the pellet appliance for the season, run the unit out of fuel and unplug the stove for added electrical protection. It is very important that the stove be cleaned and serviced as stated above.

CLEANING SURFACES

Enamel finishes and painted surfaces can be wiped down with a soft damp cloth. The paint on the firebox panels may discolour or peel. This is due to extreme conditions applied to the paint and is in no way covered by warranty.

FIREBOX PANEL

All surfaces should be brushed off periodically.

REPLACING DOOR GLASS

It is recommended that your ENVIRO dealer replace the glass if broken.

The door glass is made of high temperature PYRO CERAMIC 5 mm thick. The panel is 18.5 x 13.5 inches (470 mm x 343 mm) and must be replaced with (PART # 50-1400). Substitute materials will not be permitted.

Warranty

Sherwood Industries Ltd. gives a five year limited warranty on all steel manufactured parts. A one-year warranty is provided on all electrical components. The above limited warranties are extended only to the original purchaser.

There is no warranty on the following parts:

- Glass window
- Fiberglass rope gaskets
- refractory material
- burn pot liner
- paint
- enamel finish or gold plating where it applies

****NOTE:** The paint on the brick firebox lining may peel. This is due to the extreme conditions applied to the paint and is in no way covered under warranty.

WHEN FILING A WARRANTY CLAIM PLEASE COMPLETE THE FOLLOWING INFORMATION ON AN OFFICIAL WARRANTY CLAIM FORM:

TO THE DEALER:

- Name and address of dealer,
- Date of purchase
- Name, address and telephone number of purchaser
- Name, address and telephone number of installer
- Date of installation, and
- Serial number of the appliance

Ensure that you specify the nature of the complaint, defect, periodical malfunction, etc.

TO THE DISTRIBUTOR:

- Sign and verify that work and information are correct.
- Description and part # of any parts replaced.

The limited warranty covers defects in materials and workmanship as long as the products has been installed according to the manual's instruction. If the product is damaged or broken as a result of mishandling or misuse, the warranty does not apply. Removal and re-installation costs are not covered under this warranty.

It is the manufacturer's option whether to repair or replace the appliance. The shipping cost to and from the factory is to be paid by the consumer. All warranties by the manufacturer are set forth herein and no claim shall be made against the manufacturer on any oral warranty or representation.

The manufacturer assumes no responsibility for damage caused by household power fluctuations or power surges.

Under Warranty

For the do-it-yourself Individual

The consumer should be aware that the pellet appliance needs setting using tools that he/she might not have. It is recommended that you have a qualified installer install your pellet appliance

Sherwood Industries Ltd. reserves the right to make changes without any notice.

Installation Data Sheet

The following information must be recorded by the installer for warranty purposes and future reference.

NAME OF OWNER:

_____

ADDRESS:

_____

_____

_____

PHONE:_____

NAME OF DEALER:

_____

ADDRESS:

_____

_____

_____

PHONE:_____

MODEL:_____

SERIAL NUMBER:_____

DATE OF PURCHASE: _____ (dd/mm/yyyy)

DATE OF INSTALLATION:_____(dd/mm/yyyy)

MAGNEHELIC AT INSTALL:_____

INSTALLER'S SIGNATURE:

_____

NAME OF INSTALLER:

_____

ADDRESS:

_____

_____

_____

PHONE:_____

MANUFACTURED BY:
SHERWOOD INDUSTRIES LTD.
6782 OLDFIELD RD. SAANICHTON, BC, CANADA V8M 2A3
www.envirofire.biz
May 6, 2006
C-11114