SHERWOOD INDUSTRIES IS AN ENVIRONMENTALLY RESPONSIBLE COMPANY. THIS MANUAL IS PRINTED ON RECYCLED PAPER.

PLEASE KEEP THESE INSTRUCTIONS FOR FUTURE REFERENCE

Enviro

PELLET STOVE

Bern

OWNER'S MANUAL

CE 2006



PLEASE READ THIS ENTIRE MANUAL BEFORE INSTALLATION AND USE OF THIS PELLET-BURNING ROOM HEATER. FAILURE TO FOLLOW THESE INSTRUCTIONS COULD RESULT IN PROPERTY DAMAGE, BODILY INJURY OR EVEN DEATH.

Contact your building or fire officials about restrictions and installation inspection requirements in your area.

50-1094

Table of Contents

Introduction.....3
- Pellet Quality.....3
- Automatic Safety Features of Your Pellet Stove.....3
- Important Safety Data.....4
- Safety Warnings And Recommendations.....4
- Rating Label Location.....6
- Appliance Dimensions and Specifications.....6

Operating Instructions.....7
- Control Board Functions.....7
- Operating Your Pellet Stove.....8
- Turning Your Pellet Stove Off.....8
- Slider/Damper Set-Up.....9

Routine Cleaning and Maintenance.....10

Warranty.....13

Installation Data Sheet.....14

Introduction

* **This manual is designed for the home owner in conjunction with the technical manual. ***

Pellet Quality:

Pellet quality is important, please read the following:

Your enviro pellet stove has been designed to burn wood pellets only. Do not use any other type of fuel, as this will void any warranties stated in this manual.

The performance of your pellet stove is greatly affected by the type and quality of wood pellets being burned. As the heat output of various quality wood pellets differs, so will the performance and heat output of the pellet stove.

CAUTION: It is important to select and use only pellets that are dry and free of dirt or any impurities such as high salt content. Dirty fuel will adversely affect the operation and performance of the unit and will void the warranty.

ASH: The ash content of the fuel and operation of your stove will directly determine the frequency of cleaning. The use of high ash fuels may result in the stove needing to be cleaned daily. A low ash fuel may allow longer intervals between cleaning.

CLINKERING: [clinkers are silica (sand) or other impurities in the fuel that will form a hard mass during the burning process]. This hard mass will block the air flow through the Burn Pot Liner and affect the performance of the stove. Any fuel, even approved types, may tend to clinker. Check the Burn-Pot Liner daily to ensure that the holes are not blocked with clinkers. If they become blocked, remove the liner (when the unit is cold) and clean/scrape the clinkers out. Clean the holes with a small pointed object if required. Refer to the section Routine Cleaning and Maintenance.

PELLET FEED RATES: Due to different fuel densities and sizes, pellet feed rates may vary. This may require an adjustment to the slider damper setting or to the auger feed trim setting on Low.

Since Sherwood Industries Ltd. has no control over the quality of pellets that you use, we assume no liability for your choice in wood pellets.

Store pellets at least 36" (1 m) away from the pellet stove.

Automatic Safety Features of Your Pellet Stove:

Your pellet Stove has the following safety features:

A. The stove will shut off when the fire goes out and the exhaust temperature drops below 120°F (49°C).

B. The stove has a high temperature safety switch. If the temperature on the hopper reaches 200°F (93°C), the auger will automatically stop and the stove will shut down when the exhaust temperature cools. If this happens, call your local dealer to reset the 200°F (93°C) high limit switch. **ALSO FIND THE REASONS WHY THE UNIT OVERHEATED.**

C. If the power goes out, the unit will stop running. When the power comes back on, the stove will not restart unless the exhaust temperature is still above 120°F (49 °C) or the unit is in the ON/OFF thermostat mode.

Introduction

Important Safety Data:

Please read the entire Technical and Owner's Manual before installing or operating your ENVIRO Pellet Stove. Failure to follow these instructions may result in property damage, bodily injury or even death. Contact your local building or fire official to obtain a permit and any information on installation restrictions and inspection requirements for your area.

To prevent the possibility of a fire, ensure that the appliance is properly installed by adhering to the installation instructions. An ENVIRO dealer will be happy to assist you in obtaining information with regards to your local building codes and installation restrictions.

The stove's exhaust system works with negative combustion chamber pressure and a slightly positive chimney pressure. It is very important to ensure that the exhaust system be sealed and airtight. The ash pan and viewing door must be locked securely for proper and safe operation of the pellet stove.

Do not burn with insufficient combustion air. A periodic check is recommended to ensure proper combustion air is admitted to the combustion chamber. Setting the proper combustion air is achieved by adjusting the slider damper located on the left side of the stove.

Minor soot or creosote may accumulate when the stove is operated under incorrect conditions such as an extremely rich burn (black tipped, lazy orange flames).

If you have any questions with regard to your stove or the above-mentioned information, please feel free to contact your local dealer for further clarification and comments.

Safety Warnings And Recommendations:

Caution: Do not connect to any air distribution duct or system.

Do not burn garbage or flammable fluids such as gasoline, naptha or engine oil.

Unit hot while in operation. Keep children, clothing and furniture away. Contact may cause skin burns.

FUEL: This pellet stove is designed and approved to only burn wood pellet fuel with less than 4% ash content. Dirty fuel will adversely affect the operation and performance of the unit and may void the warranty. Check with your dealer for fuel recommendations.

THE USE OF CORDWOOD IS PROHIBITED BY LAW.

SOOT: Operation of the stove with insufficient combustion air will result in the formation of soot which will collect on the glass, the heat exchanger, the exhaust vent system, and may stain the outside of the house. This is a dangerous situation and is inefficient. Frequently check your stove and adjust the slider/damper as needed to ensure proper combustion. **See: "Slider/Damper Setting".**

CLEANING: There will be some build up of fly ash and small amounts of creosote in the exhaust. This will vary due to the ash content of the fuel used and the operation of the stove. It is advisable to inspect and clean the exhaust vent semi-annually or every two tons of pellets.

Introduction

ASHES: Disposed ashes should be placed in a metal container with a tight-fitting lid. The closed container of ashes should be on a non-combustible floor on the ground, well away from all combustible materials pending final disposal. The ashes should be retained in the closed container until all cinders have thoroughly cooled before disposing of them.

ELECTRICAL: The use of a surge protected power bar is recommended. The unit must be grounded. The grounded electrical cord should be connected to a standard 220-240 volts, nominal average 0.8 Amps (1.4 Amps peak), 50 hertz electrical outlet and also must be accessible. If this power cord should become damaged, a replacement power cord must be purchased from the manufacturer or a qualified ENVIRO dealer. Be careful that the electrical cord is not trapped under the appliance and that it is clear of any hot surfaces or sharp edges. This unit's maximum power requirement is 184 watts (322 watts peak).

GLASS: Do not abuse the glass by striking or slamming the door. Do not attempt to operate the stove with broken glass. The stove uses ceramic glass. Replacement glass must be purchased from an ENVIRO dealer. Do not attempt to open the door and clean the glass while the unit is in operation or if glass is hot. To clean the glass, use a soft cotton cloth and mild window cleaner, gas or wood stove glass cleaner, or take a damp paper towel and dip into the fly ash. This is a very mild abrasive and will not damage the glass.

FLAMMABLE LIQUIDS: Never use gasoline, gasoline-type lantern fuel, kerosene, charcoal lighter fluid, or similar liquids to start or "freshen up" a fire in the heater. Keep all such liquids well away from the heater while it is in use.

SMOKE DETECTOR: Smoke detectors should be installed and maintained in the structure when installing and operating a pellet burning appliance.

OPERATION: The ash pan and door must be closed securely for proper and safe operation of the pellet stove. Also ensure all gaskets on the door are checked and replaced when necessary.

KEEP ASH PAN FREE OF RAW FUEL.

DO NOT PLACE UNBURNED OR NEW PELLET FUEL IN ASH PAN. A fire in the ash pan may occur.

If you have any questions with regards to your stove or the above-mentioned information, please feel free to contact your local dealer for further clarification and comments.

SINCE SHERWOOD INDUSTRIES LTD. HAS NO CONTROL OVER THE INSTALLATION OF YOUR STOVE, SHERWOOD INDUSTRIES LTD. GRANTS NO WARRANTY IMPLIED OR STATED FOR THE INSTALLATION OR MAINTENANCE OF YOUR STOVE. THEREFORE, SHERWOOD INDUSTRIES LTD. ASSUMES NO RESPONSIBILITY FOR ANY CONSEQUENTIAL DAMAGE(S).

SAVE THIS INSTRUCTION MANUAL FOR FUTURE REFERENCE

Introduction

Rating Label Location:

The rating label is located on the back of the unit.

Appliance Dimensions and Specifications:

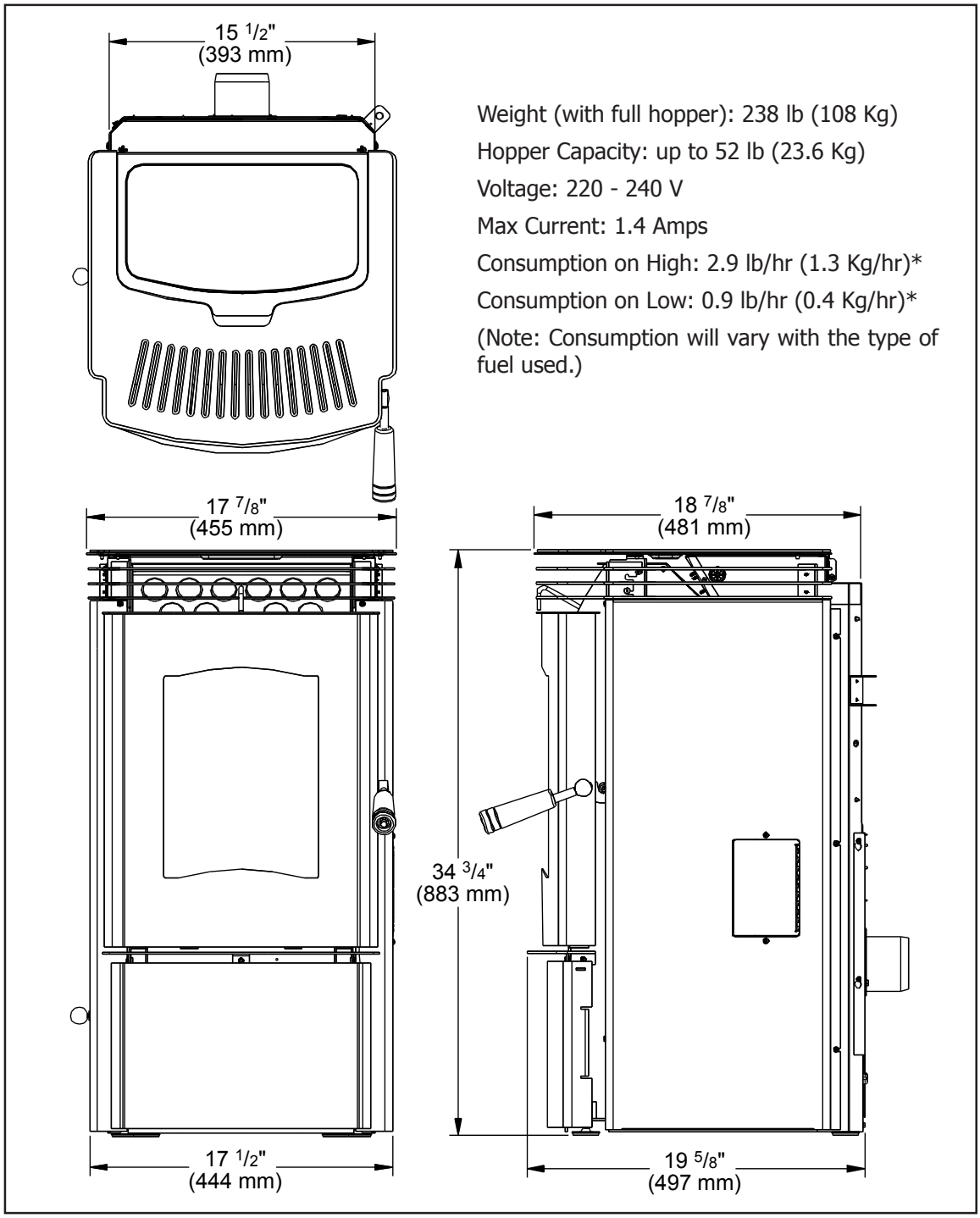

Figure 1: Dimensions of Bern.

Operating Instructions

Control Board Functions:

1. **AUGER TRIM:** Used to change feed rates on LOW ONLY for poorer quality fuels. Push the Auger Trim button until the number 1 and 5 lights appear on the Heat Level Indicator. This will increase the feed rate to 2.5 seconds ON time Auger pulse. This is done only on LOW to allow the burning of poor quality fuels. Push the button until the number 1 and 4 lights appear, this will reduce the Auger On time to 1.5 second. This setting is for high-grade fuel only. Push the button until just the number 1 light is on, this is for a 2 second ON time (standard setting). Refer to Figure 3.

2. **CONVECTION BLOWER CONTROL:** Used to turn the convection blower ON/OFF. Leave convection blower ON for peak effiency.

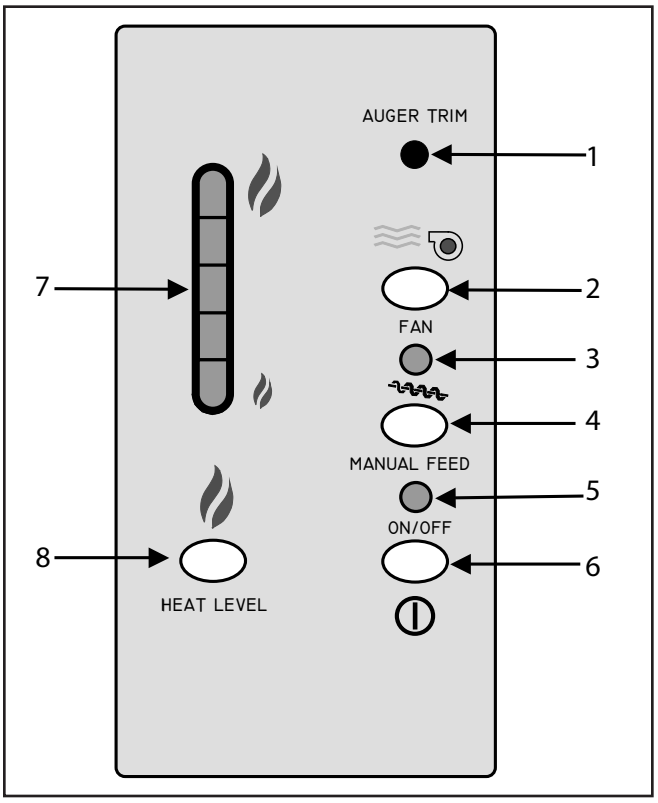

Figure 2: Circuit Board Control Panel Decal

3. **AUGER PULSE LIGHT:** This light will flash in conjunction with the auger.

4. **MANUAL AUGER FEED:** If the unit runs out of fuel, this button can be used to "prime the auger system". This button will turn off after 60 seconds and then must be released and pressed again.

5. **SYSTEM LIGHT:** Responsible for signaling the state of the control board. When the light is flashing during start-up, the stove is in an automatic start mode. When the light is solid, the Heat Level Setting can be altered.

6. **ON/OFF BUTTON:** Used to turn the unit ON and OFF.

7. **HEAT OUTPUT INDICATOR:** Shows the present heat output setting.

8. **HEAT LEVEL ADJUSTMENT:** When pressed, will change the heat setting of the unit from low to high in five (5) steps.

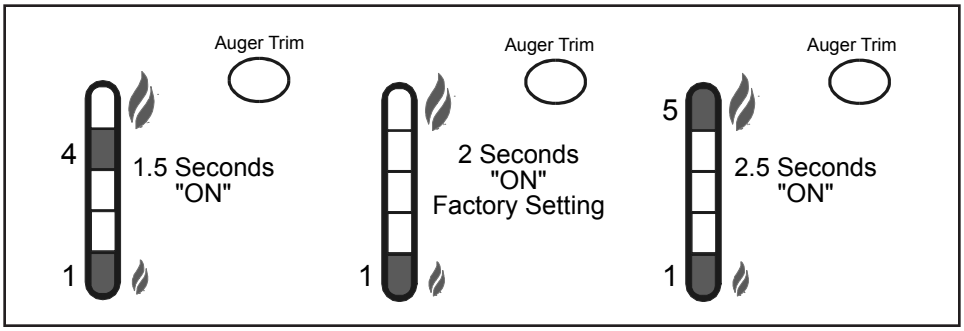

Figure 3: Auger trim and heat level indicator.

Operating Instructions

Operating Your Pellet Stove:

PRE-BURN INSTRUCTIONS: The burn pot liner holes must be clear and the liner installed properly against the ignitor tube for proper operation. Check the hopper for enough pellets to start the unit.

DO NOT OPERATE THE UNIT WITH THE DOOR OR ASH PAN OPEN.

MANUAL MODE:

To START: Press the ON / OFF button. The stove will turn on. The system light will flash. The Auger Light will flash with each pulse of the auger (the Auger Feed Rate is pre-programmed during start-up). The Heat Level Indicator will show the Heat Level that the stove will run at after start-up.

If this is the first time the unit has been started or the unit has run out of fuel, the auger will need to be primed. Press the Manual Auger Feed button until fuel starts to drop into the Burn Pot Liner (see "Operating Instructions; Stove Controls").

To OPERATE: When a fire has been established, the System Light will turn solid (after approximately 10 - 15 minutes) and the Auger Light will continue to flash to the corresponding Heat Level setting. The Heat Level button can now be pressed at this time to change the desired Heat Level Output setting.

The convection blower (room air blower) will turn on. The speed of this blower is controlled by the setting of the heat level output indicator. The convection blower can be turned OFF by depressing the convection blower control button. For the best efficiency and to prevent cycling, the convection blower should be left on at all times.

When operating on LOW HEAT LEVEL, the feed rate can be adjusted, using the auger trim, for different quality fuels. These settings can be used if the fire keeps going out on low (poor quality fuel). Or if the low setting is too hot for the room (see "Operating Instructions; Control Board Functions").

THERMOSTAT / SWITCH MODE:

INITIAL START-UP: See above

OPERATION - HI / LOW mode: When the thermostat contacts are closed the stove settings are adjustable as per Manual Mode (see above). When the thermostat contacts open, the circuit board will take control of the settings. The stove will drop down to a low burn until the thermostat contacts close again. This low burn setting can be adjusted for different fuel qualities (see "Operating Instructions; Stove Controls - Circuit Board"). The stove will come back to the previous HEAT LEVEL setting when the thermostat contacts close again.

OPERATION – ON / OFF mode: When the thermostat contacts close, the unit will light automatically. Once up to temperature, the stove operates the same as in manual mode (see above). When the thermostat contacts open, the unit automatically begins its shutdown routine. The stove will re-light when the thermostat contacts close again.

Turning Your Pellet Stove Off:

- MANUAL and HI / LOW mode: To turn the unit OFF, simply press the ON / OFF button. This will stop the feed of pellets. The blowers will continue to operate and cool the stove down. When cool enough, the stove will turn off.
- ON / OFF mode: To turn the unit OFF, turn the thermostat down or off.

DO NOT unplug unit while Combustion fan is operating.
This may lead to smoke escaping from the stove.

Slider/Damper Set-Up:

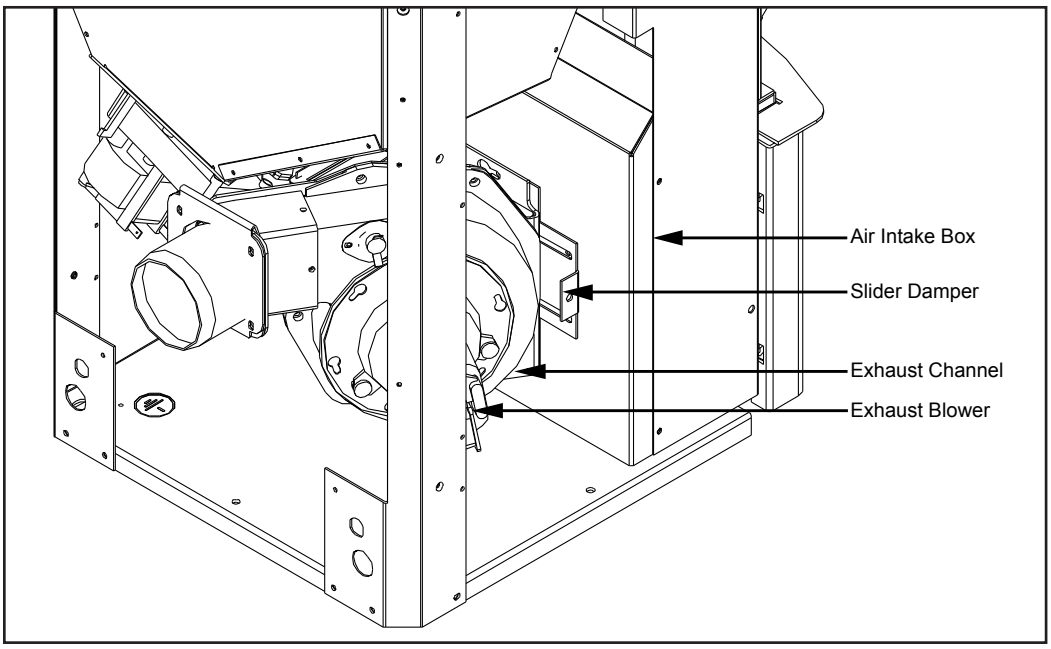

Figure 4: Slider/Damper Plate in Unit.

If the fire should happen to go out and the heat output indicator has been set on the lowest setting, the Slider Damper should be pushed in slightly, decreasing the air in the firebox or adjust the auger trim.

If, after long periods of burning, the fire builds up and over flows the burn pot or there is a build up of clinkers, this would be a sign that the pellet quality is poor and the slider damper must be pulled out to compensate, letting more air in the firebox.

Pulling the slider damper out gives the fire more air.

The easiest way to make sure that an efficient flame is achieved is to see the characteristics of the fire.

- A tall and lazy flame with dark orange tips requires more air – Open slider / damper up.
- A short and brisk flame, like a blowtorch, has too much air – Close slider / damper down.
- If the flame is in the middle of these two characteristics with a bright yellow/orange, active flame then the air is set for proper operation.



Figure 5: Efficient Flame.

SPECIAL NOTES:

Pellet quality is a major factor in how the Pellet stove will operate. If the Pellets have a high moisture content or ash content the fire will be less efficient and has a higher possibility of the fire building up and creating clinkers (hard ash build-up).

Routine Cleaning and Maintenance

The following list of components should be inspected and maintained routinely to ensure that the appliance is operating at its' optimum and giving you excellent heat value:

2-3 Days / Weekly	Semi-annually or 2 Tons of Fuel
Burn Pot and Liner	Exhaust Vent
Heat Exchanger Tubes	Air Intake
Ash Pan	Blower Mechanisms
Door Glass	Heat Exchanger Tubes
Inside Firebox	Behind Firebox Liners & Covers
Ash Pan and Door Gaskets	All Hinges
Door Latch	Post Season Clean-up

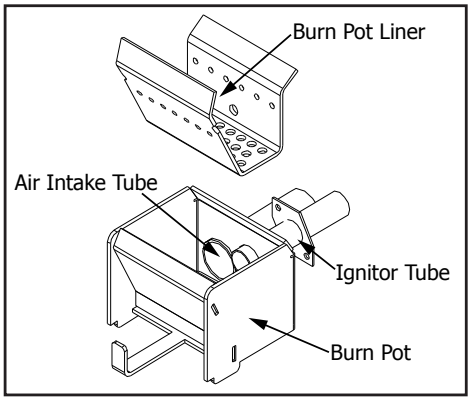

Figure 6: Bern Burn pot and Liner

TOOLS REQUIRED TO CLEAN UNIT:

Torx T-20 Screwdriver, $^{5}/_{16}$" wrench or socket, Brush, Soft Cloth, Vacuum with fine filter bag

BURNER POT AND LINER (2-3 days)

Every two to three days (when the unit is cold), remove the burn-pot liner from the stove. Using a metal scrapper, remove material that has accumulated or is clogging the liner's holes. Then dispose of the scrapped ashes from the liner and from inside the burn-pot. Place the burn-pot back into the stove, making sure that the pipes are properly inserted into the burn pot. Place the liner back into the burn-pot, making sure that the ignitor hole in the liner is aligned with the ignitor tube. Pushing the liner up against the ignitor tube.

If, after long periods of burning, the fire continually builds up and overflows the burn pot or there is a build up of clinkers, this is an indication that the pellet fuel quality is poor or the stove may need cleaning. Check the stove for ash build up (clean if required) and adjust the slider / damper to produce the proper clean combustion.

To clean the burn pot swing the door open. Pull the burn pot clean-out lever in and out several times; the lever is located under the door opening (shown in Figure 6). Ensure the lever is pushed in before closing the door.

HEAT EXCHANGER TUBES (2-3 days)

A handle is located in the center of the stove just above the door (shown in Figure 6). This handle is to be pulled up and down a few times (ONLY WHEN THE UNIT IS COLD) in order to clean away any fly ash that may have collected on the heat exchanger tubes. As different types of pellets produce different amounts of ash, cleaning of the tubes should be done on a regular basis to enable the unit to run efficiently.

ASH PAN AND DOOR GASKETS (weekly)

After extended use the gasketing may come loose. To repair this, glue the gasketing on using high-temperature fiberglass gasket glue available from your local dealer. This is important to maintain an airtight assembly.

DOOR GLASS CLEANING (2-3 days)

Cleaning of the glass must only be done when stove is cold. Open the door by lifting the handle. The glass can be cleaned by wiping down the outside and inside of the glass with a dry soft cloth.

Routine Cleaning and Maintenance

If the glass has build up that can not be removed with only the cloth, clean the glass using paper towel and a gas appliance glass cleaner, this may be purchased through most dealers. If a gas appliance glass cleaner is not available, use a damp paper towel dipped in fly ash to clean the glass. After the glass has been cleaned use the dry soft cloth to wiping down the outside and inside of the glass.

ASH PAN (weekly)

This part is located under the door. To remove the ash pan, open the cover from the right hand side, and lift the ash pan up and out. Dump the ashes into a metal container stored away from combustibles. Monitor the ash level every week. Remember that different pellet fuels will have different ash contents. Ash content is a good indication of fuel efficiency and quality. Refer to "Safety Warnings And Recommendations" for disposal of ashes. Vacuum the inside of the ash pan compartment inside the pedestal including the hole at the top back of the compartment. Replace the ash pan and close pedestal door. **DO NOT PLACE UNBURNED OR RAW PELLET FUEL IN ASH PAN.**

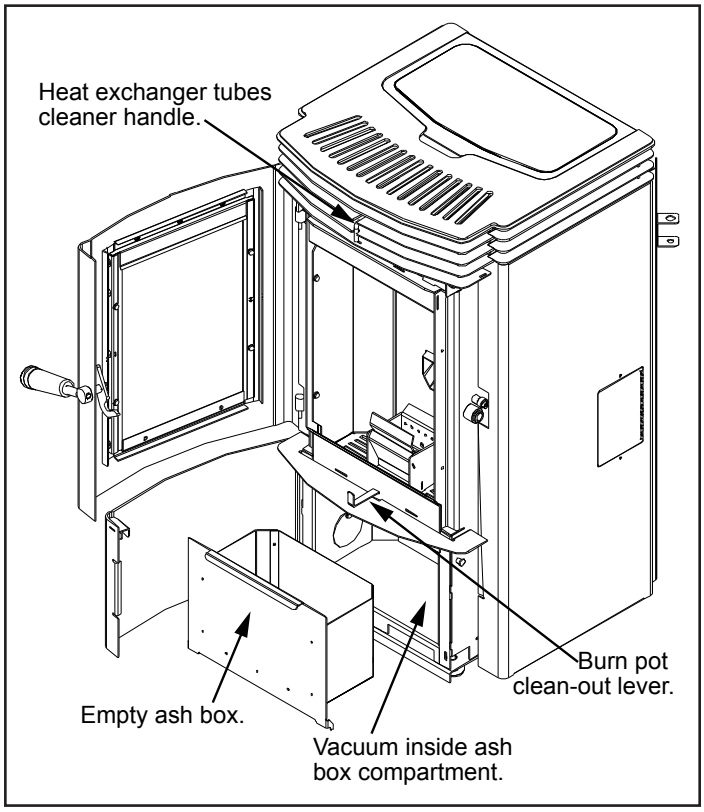

Figure 7: Bern Open

AIR INTAKE (semi-annually)

Inspect periodically to be sure that it is not clogged with any foreign materials.

EXHAUST PASSAGES (semi-annually)

To prevent build up of fly-ash all the exhaust passages must be cleaned and vacuumed.

Clean behind clean-out covers:

- Open ash box cover.
- Remove ash box.
- Using a 5/16" socket, loosen the six (6) screws in the ash box compartment; four (4) on the back and one (1) on each side (see Figure 8).
- Rotate the back cover counter-clockwise to remove and rotate the side covers to open them.
- Vacuum out all three (3) chambers.
- Close all the clean-out covers and tighten the screws.

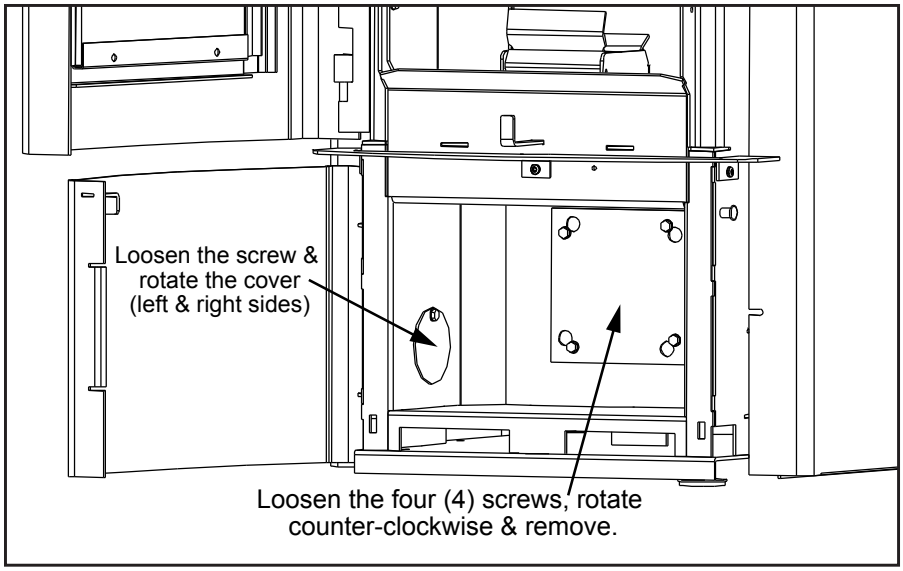

Figure 8: Bern Clean-Out Covers.

Routine Cleaning and Maintenance

Removal of the firebox backing.

- Open the door by lifting the handle, remove the burn pot and burn pot liner.
- Lubricate all screws with penetrating oil.
- Remove the four (4) screws that hold the side panels in place.
- With the tip of a flat screwdriver, gently lift up the side panels and remove the side panels.
- Pull the center panel out.
- Vacuum thoroughly.

Installation of firebox backing:

- Insert center panel.
- Place the side panels back into the firebox locking them into place and re-install the two (2) screws on each side.
- Clean thoroughly.

EXHAUST VENT (annually)

This vent should be cleaned every year or after two tons of pellets. We recommend contacting your dealer for professional cleaning. To clean the vent pipe, tap lightly on the pipe to dislodge any loose ash. Open the bottom of the "T" to dump the ash, then vacuum as much of the ash out of the vent pipe as possible.

BLOWER MECHANISMS (season)

Unplug the stove then open the right and left side panels to access the two blowers. Vacuum all dust from motors. DO NOT lubricate the motors. Check gaskets and replace if needed.

POST SEASON CLEAN-UP

Once you are finished using the pellet appliance for the season, unplug the stove for added electrical protection. It is very important that the stove be cleaned and serviced as stated above.

FIREBOX PANEL

The paint on the steel firebox panels may peel. This is due to extreme conditions applied to the paint and is in no way covered by warranty.

DOOR GLASS REPLACEMENT

It is recommended that your dealer replace the glass if broken. The door glass is made of high temperature PYRO CERAMIC. To replace the glass, unscrew and remove the four glass retainers. Remove the glass and any broken pieces. High temperature fiberglass tape should be used around the glass. Replace the glass by securing the glass retainers back to the frame ensure the glass is seated against the bottom glass retainer screws. The use of substitute materials is prohibited use only part 50-1155.

Warranty

Sherwood Industries Ltd. gives a five year limited warranty on all steel manufactured parts. A one-year warranty is provided on all electrical components. The above limited warranties are extended only to the original purchaser.

There is no warranty on the following parts:

- Glass window
- Fiberglass rope gaskets
- refractory material
- burn pot liner
- paint
- enamel finish or gold plating where it applies

****NOTE:** The paint on the brick firebox lining may peel. This is due to the extreme conditions applied to the paint and is in no way covered under warranty.

WHEN FILING A WARRANTY CLAIM PLEASE COMPLETE THE FOLLOWING INFORMATION ON AN OFFICIAL WARRANTY CLAIM FORM:

TO THE DEALER:

- Name and address of dealer,
- Date of purchase
- Name, address and telephone number of purchaser
- Name, address and telephone number of installer
- Date of installation, and
- Serial number of the appliance

Ensure that you specify the nature of the complaint, defect, periodical malfunction, etc.

TO THE DISTRIBUTOR:

- Sign and verify that work and information are correct.
- Description and part # of any parts replaced.

The limited warranty covers defects in materials and workmanship as long as the products has been installed according to the manual's instruction. If the product is damaged or broken as a result of mishandling or misuse, the warranty does not apply. Removal and re-installation costs are not covered under this warranty.

It is the manufacturer's option whether to repair or replace the appliance. The shipping cost to and from the factory is to be paid by the consumer. All warranties by the manufacturer are set forth herein and no claim shall be made against the manufacturer on any oral warranty or representation.

The manufacturer assumes no responsibility for damage caused by household power fluctuations or power surges.

Under Warranty

For the do-it-yourself Individual

The consumer should be aware that the pellet appliance needs setting using tools that he/she might not have. It is recommended that you have a qualified installer install your pellet appliance

Sherwood Industries Ltd. reserves the right to make changes without any notice.

Installation Data Sheet

The following information must be recorded by the installer for warranty purposes and future reference.

NAME OF OWNER:

_____

ADDRESS:

_____

_____

_____

PHONE:_____

NAME OF DEALER:

_____

ADDRESS:

_____

_____

_____

PHONE:_____

MODEL:_____

SERIAL NUMBER:_____

DATE OF PURCHASE: _____ (dd/mm/yyyy)

DATE OF INSTALLATION:_____(dd/mm/yyyy)

MAGNEHELIC AT INSTALL:_____

INSTALLER'S SIGNATURE:

_____

NAME OF INSTALLER:

_____

ADDRESS:

_____

_____

_____

PHONE:_____

MANUFACTURED BY:
SHERWOOD INDUSTRIES LTD.
6782 OLDFIELD RD. SAANICHTON, BC, CANADA V8M 2A3
www.envirofire.biz
August 4, 2006
C-11147