*SHERWOOD INDUSTRIES IS AN ENVIRONMENTALLY RESPONSIBLE COMPANY. THIS MANUAL IS PRINTED ON RECYCLED PAPER.*

PLEASE KEEP THESE INSTRUCTIONS FOR FUTURE REFERENCE

Enviro

PELLET STOVE

# Bern

# TECHNICAL MANUAL

CE 2006



**PLEASE READ THIS ENTIRE MANUAL BEFORE INSTALLATION AND USE OF THIS PELLET BURNING ROOM HEATER. FAILURE TO FOLLOW THESE INSTRUCTIONS COULD RESULT IN PROPERTY DAMAGE, BODILY INJURY OR EVEN DEATH**

**Contact your building or fire officials about restrictions and installation inspection requirements in your area.**

**50-1095**

# Table of Contents


Introduction....3
- Rating Label Location....3
- Important Safety Data....3
- Safety Warnings And Recommendations....3

Installation....5
- Deciding Where to Locate your Pellet Appliance....5
- Removing Pellet Stove From Pallet....5
- Appliance Dimensions and Specifications ....6
- Clearances to Combustibles....7
- Alcove Clearances....7
- Vent Termination Requirements....8
- Exhaust Location....9
- Corner Through Wall Installation....9
- Horizontal Exhaust Through Wall Installation....10
- Through Wall With Vertical Rise and Horizontal Termination Installation - Freestanding....11
- Inside Vertical Installations....12
- Outside Vertical Installations....12
- Hearth Mount Installation....13
- Exterior Mounted Exhaust Blower....15
- Typical Through Wall With Exterior Blower Kit Installation - Horizontal Termination....16
- Typical Through Wall With Exterior Blower Kit Installation - Vertical Termination....17
- Thermostat Installation....18
- Optional Slider/Damper Installation....18
- Slider/Damper Set-Up....19
- Optional Panel Kit....20
- Optional Fan Kit....21

Troubleshooting....22
- Fuses....24

Wiring Diagram....25
Parts List....26
Parts Diagram - Components....28
Parts Diagram - Steel....29
Warranty....30
Installation Data Sheet....31

# Introduction

* **This manual is designed for the technician in conjunction with the owner's manual. ***

## Rating Label Location:

The rating label is located on the back of the unit.

## Important Safety Data:

**Please read this entire Owner's Manual before installing or operating this ENVIRO Pellet Stove. Failure to follow these instructions may result in property damage, bodily injury or even death.** Contact your local building or fire official to obtain a permit and any information on installation restrictions and inspection requirements for your area.

**To prevent the possibility of a fire, ensure that the appliance is properly installed by adhering to the installation instructions.** An ENVIRO dealer will be happy to assist you in obtaining information with regards to your local building codes and installation restrictions.

Be sure to maintain the structural integrity of the home when passing a vent through walls, ceilings, or roofs.

The stove's exhaust system works with negative combustion chamber pressure and a slightly positive chimney pressure. It is very important to ensure that the exhaust system be sealed and airtight. The ash pan and viewing door must be locked securely for proper and safe operation of the pellet stove.

Do not burn with insufficient combustion air. A periodic check is recommended to ensure proper combustion air is admitted to the combustion chamber. Setting the proper combustion air is achieved by adjusting the slider damper located on the left side of the stove.

When installing the stove in a mobile home, it must be electrically grounded to the steel chassis of the home and bolted to the floor. Make sure that the structural integrity of the home is maintained and all construction meets local building codes.

Minor soot or creosote may accumulate when the stove is operated under incorrect conditions such as an extremely rich burn (black tipped, lazy orange flames).

If you have any questions with regard to your stove or the above-mentioned information, please feel free to contact your local dealer for further clarification and comments.

## Safety Warnings And Recommendations:

**Caution: Do not connect to any air distribution duct or system.**
**Do not burn garbage or flammable fluids such as gasoline, naptha or engine oil.**
**Unit hot while in operation. Keep children, clothing and furniture away. Contact may cause skin burns.**

**SOOT:** Operation of the stove with insufficient combustion air will result in the formation of soot which will collect on the glass, the heat exchanger, the exhaust vent system, and may stain the outside of the house. This is a dangerous situation and is inefficient. Frequently check your stove and adjust the slider/damper as needed to ensure proper combustion. **See: "Installation Slider/Damper Setting".**

# Introduction

**ELECTRICAL: The use of a surge protected power bar is recommended.** The unit must be grounded. The grounded electrical cord should be connected to a standard 220-240 volts,, nominal average 0.8 Amps (1.4 Amps peak), 50 hertz electrical outlet and also must be accessible. If this power cord should become damaged, a replacement power cord must be purchased from a qualified ENVIRO dealer. Be careful that the electrical cord is not trapped under the appliance and that it is clear of any hot surfaces or sharp edges. This unit's maximum power requirement is 184 watts (322 watts peak).

**GLASS:** Do not abuse the glass by striking or slamming the door. Do not attempt to operate the stove with broken glass. The stove uses ceramic glass. Replacement glass must be purchased from an ENVIRO dealer. Do not attempt to open the door and clean the glass while the unit is in operation or if glass is hot. To clean the glass, use a soft cotton cloth and mild window cleaner, gas or wood stove glass cleaner, or take a damp paper towel and dip into the fly ash. This is a very mild abrasive and will not damage the glass.

**FLAMMABLE LIQUIDS: Never** use gasoline, gasoline-type lantern fuel, kerosene, charcoal lighter fluid, or similar liquids to start or "freshen up" a fire in the heater. Keep all such liquids well away from the heater while it is in use.

**SMOKE DETECTOR:** Smoke detectors should be installed and maintained in the structure when installing and operating a pellet burning appliance.

**OPERATION:** The ash pan and door must be closed securely for proper and safe operation of the pellet stove. Also ensure all gaskets on the door are checked and replaced when necessary.

**INSTALLATION:** Be sure to maintain the structural integrity of your home when passing a vent through walls, ceilings, or roofs. It is recommended that the unit be secured into its position in order to avoid any displacement.

DO NOT INSTALL A FLUE DAMPER IN THE EXHAUST VENTING SYSTEM OF THIS UNIT.

DO NOT CONNECT THIS UNIT TO A CHIMNEY FLUE SERVING ANOTHER APPLIANCE.

**FRESH AIR:** Outside Fresh Air is optional. Consider all large air moving devices when installing your unit and provide room air accordingly. Limited air for combustion may result in poor performance, smoking and other side effects of poor combustion.

If you have any questions with regards to your stove or the above-mentioned information, please feel free to contact your local dealer for further clarification and comments.

**SINCE SHERWOOD INDUSTRIES LTD. HAS NO CONTROL OVER THE INSTALLATION OF YOUR STOVE, SHERWOOD INDUSTRIES LTD. GRANTS NO WARRANTY IMPLIED OR STATED FOR THE INSTALLATION OR MAINTENANCE OF YOUR STOVE. THEREFORE, SHERWOOD INDUSTRIES LTD. ASSUMES NO RESPONSIBILITY FOR ANY CONSEQUENTIAL DAMAGE(S).**

## SAVE THIS INSTRUCTION MANUAL FOR FUTURE REFERENCE

# Installation

## Deciding Where to Locate your Pellet Appliance:

1. Check clearances to combustibles.
2. Do not obtain combustion air from an attic, garage or any unventilated space. Combustion air may be obtained from a ventilated crawlspace.
3. Do not install the stove in a bedroom.
4. You can vent the stove through an exterior wall behind the unit or connect it to an existing masonry or metal chimney (must be lined if the chimney is over 6" (15 cm) diameter, or over 28 inches² (180 cm²) cross sectional area). An interior vent can be used with approved pipe passing through the ceiling and roof.
5. Locate the stove in a large and open room that is centrally located in the house. This will optimize heat circulation.
6. The power cord is 8 feet (2.43 m) long and may require a grounded extension cord to reach the nearest electrical outlet.

## Removing Pellet Stove From Pallet:

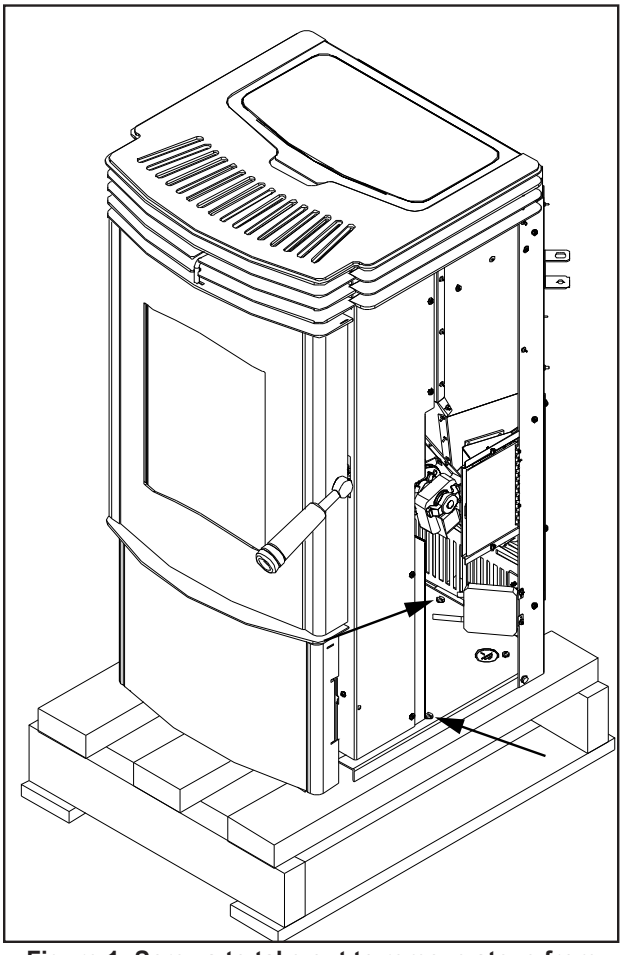

**Figure 1: Screws to take out to remove stove from pallet.**

1. Remove the right and left hand cabinet sides by loosening the three (3) T-20 Torx screws on the back of the each panel.
2. Remove the screw located on the front of the cabinet side, below the louvers and loosen the screw behind the ash door.
3. Using a $^{5}/_{16}$" socket of flat head screwdriver, remove the three (3) wood screws that are holding the bottom of the stove to the pallet. There is one (1) screw behind each side panel and one (1) at the back behind the back grill.
4. Close the side panels.
5. Install the four (4) leveling legs into the nuts in the base.

# Installation

## Appliance Dimensions and Specifications:

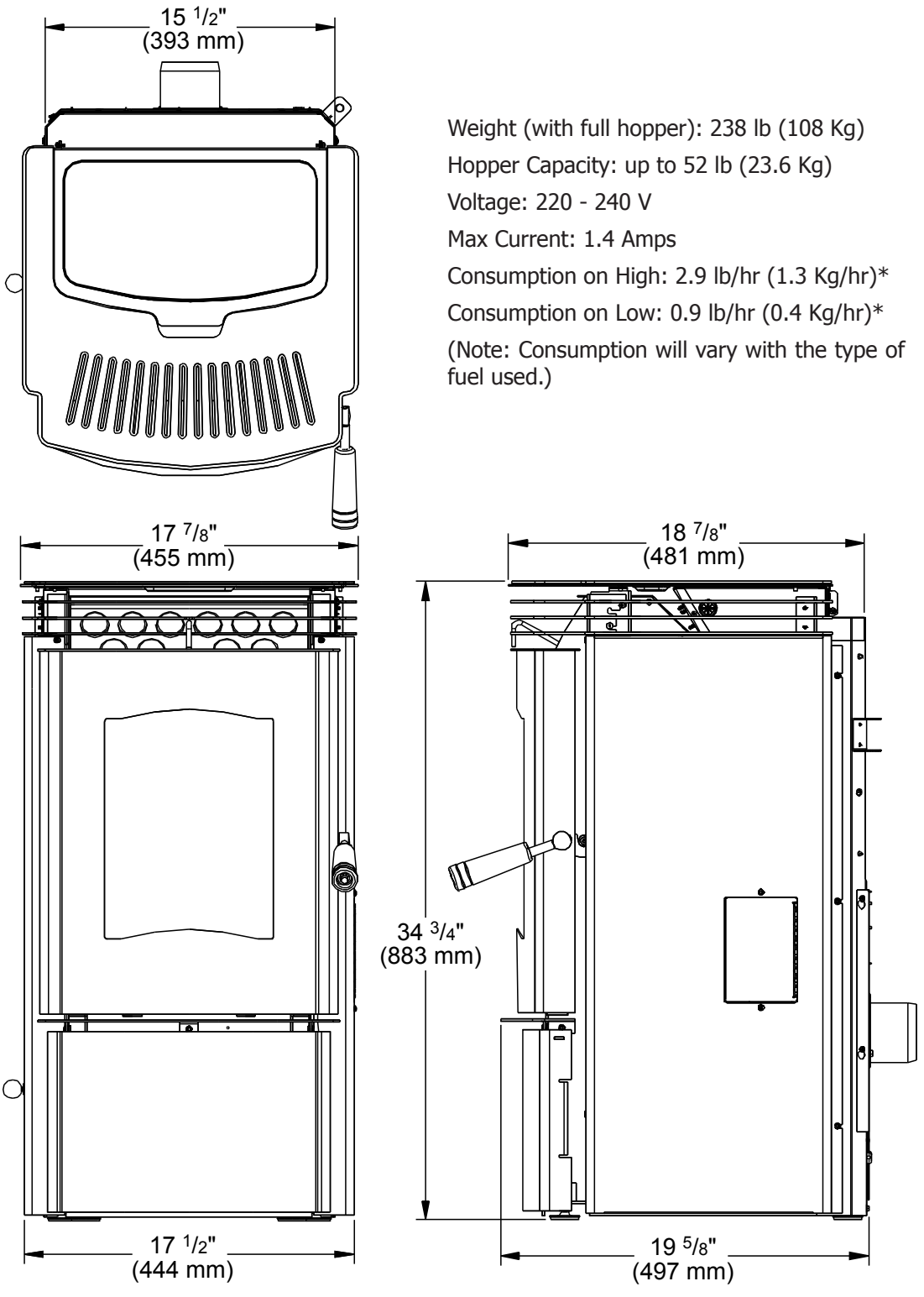


Weight (with full hopper): 238 lb (108 Kg)

Hopper Capacity: up to 52 lb (23.6 Kg)

Voltage: 220 - 240 V

Max Current: 1.4 Amps

Consumption on High: 2.9 lb/hr (1.3 Kg/hr)*

Consumption on Low: 0.9 lb/hr (0.4 Kg/hr)*

(Note: Consumption will vary with the type of fuel used.)

**Figure 2: Dimensions of Bern.**

# Installation

## Clearances to Combustibles:

Use a hearth pad that extends 6 inches (15 cm) in front of the unit when installing on a combustible floor.

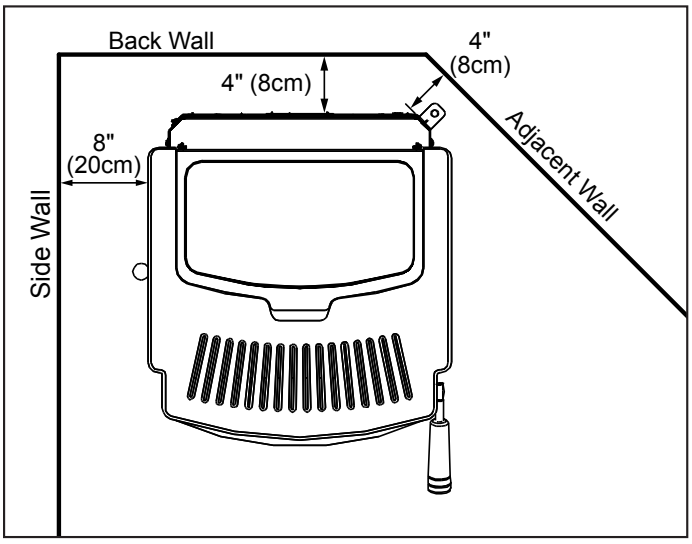


**Figure 3: Bern Clearance to Combustibles.**

These dimensions are minimum clearances but it is recommended that you ensure sufficient room for servicing, routine cleaning and maintenance.

| | | |
|---|---|---|
| Side wall to unit | 8 inches | (20 cm) |
| Back wall to unit | 4 inches | (10 cm) |
| Corner to unit | 4 inches | (10 cm) |

## Alcove Clearances:

This unit may be installed in an alcove. Maintain these clearances to combustibles.

| | | |
|---|---|---|
| Minimum Alcove width | 48 inches | (122 cm) |
| Minimum Alcove height | 48 inches | (122 cm) |
| Maximum Alcove depth | 48 inches | (122 cm) |

**Install vent at clearances specified by the vent manufacturer.**

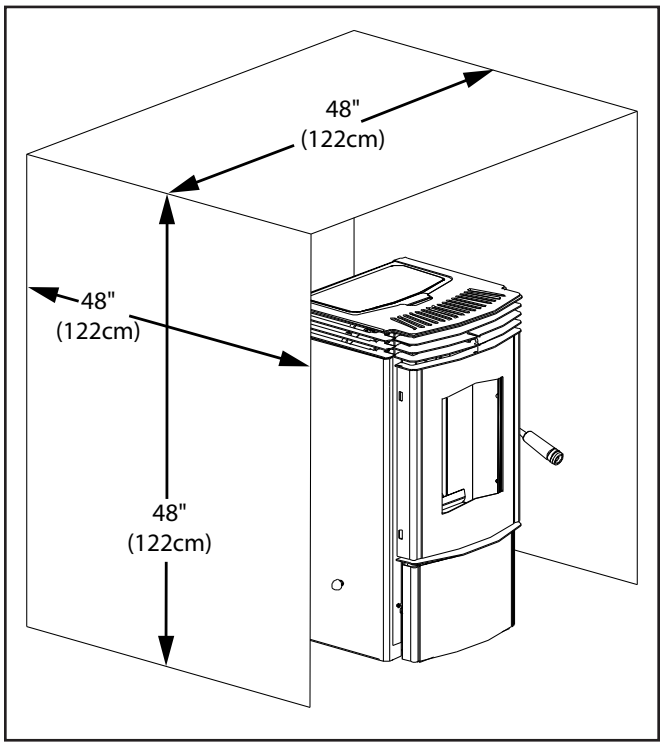


**Figure 4: Bern Minimum Alcove Size.**

## VENT TERMINATION REQUIREMENTS:

**IT IS RECOMMENDED THAT YOUR PELLET STOVE BE INSTALLED BY AN AUTHORIZED DEALER/INSTALLER.**

**Table 1: Use in conjunction with Figure 5 for allowable exterior vent termination locations.**

| Letter | Minimum Clearance | Description |
|---|---|---|
| A | 24 in (61 cm) | Above grass, top of plants, wood, or any other combustible materials. |
| B | 48 in (122 cm) | From beside/below any door or window that may be opened. |
| C | 24 in (61 cm) | From above any door or window that may be opened. |
| D | 24 in (61 cm) | To any adjacent building, fences and protruding parts of the structure. |
| E | 24 in (61 cm) | Below any eave or roof overhang |
| F | 12 in (30 cm) | To outside corner. |
| G | 12 in (30 cm) | To inside corner, combustible wall (vertical and horizontal terminations). |
| H | 3 ft (91 cm) within a height of 15 ft (4.5 m) above the meter/regulator assembly | To each side of center line extended above natural gas or propane meter/regulator assembly or mechanical vent. |
| I | 3 ft (91 cm) | From any forced air intake of other appliance |
| J | 12 in (30 cm) | Clearance to non-mechanical air supply inlet to building, or the combustion air inlet to any appliance. |
| K | 24 in (61 cm) | Clearance above roof line for vertical terminations. |
| L | 7 ft (2.13 m) | Clearance above paved sidewalk or paved driveway located on public property. |

1. Do not terminate the vent in any enclosed or semi-enclosed areas such as a carport, garage, attic, crawlspace, narrow walkway, closely fenced area, under a sundeck or porch, or any location that can build up a concentration of fumes such as stairwells, covered breezeway, etc.

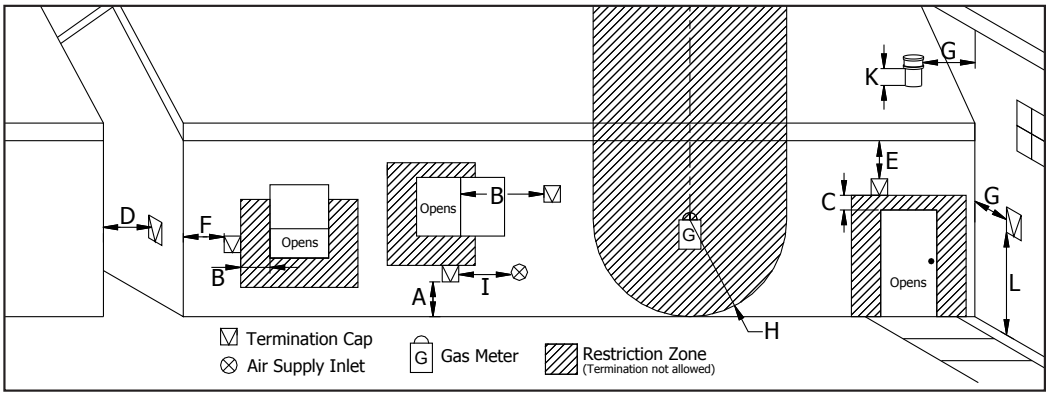


**Figure 5: Use in conjunction with Table 1 for allowable exterior vent termination locations.**

2. Vent surfaces can become hot enough to cause burns if touched by children. Non-combustible shielding or guards may be required.
3. Termination must exhaust above the inlet elevation. It is recommended that at least five feet of vertical pipe be installed outside when the appliance is vented directly through a wall, to create some natural draft to prevent the possibility of smoke or odor during appliance shut down or power failure. This will keep exhaust from causing a nuisance or hazard from exposing people or shrubs to high temperatures. In any case, the safest and preferred venting method is to extend the vent through the roof vertically.
4. Distance from the bottom of the termination and grade is 12" (30 cm) minimum. This is conditional upon the plants and nature of grade surface. The exhaust gases are hot enough to ignite grass, plants and shrubs located in the vicinity of termination. The grade surface must not be lawn.
5. If the unit is incorrectly vented or the air to fuel mixture is out of balance, a slight discoloration of the exterior of the house might occur. Since these factors are beyond the control of Sherwood Industries Ltd, we grant no guarantee against such incidents.

**NOTE: Venting terminals shall not be recessed into walls or siding.**

## Exhaust Location:

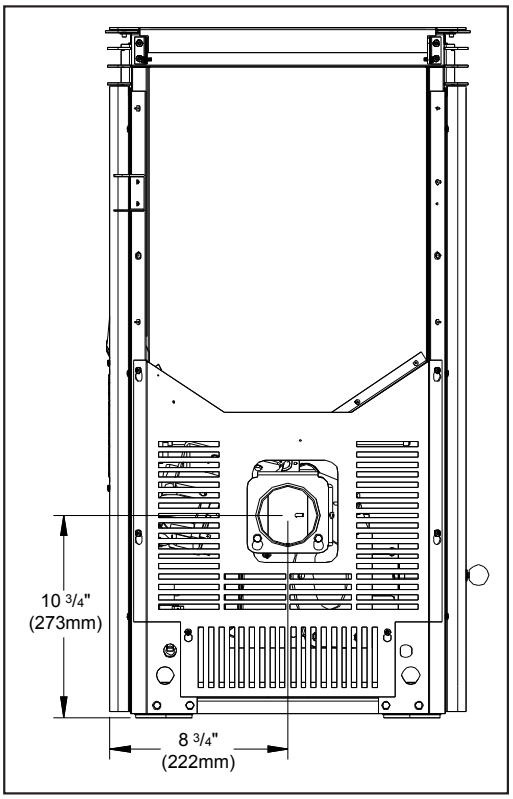


Figure 6: Bern Inlet and Outlet Location.

Base of unit to center of flue 10¾" (273 mm)

Side of unit to center of flue 8¾" (222 mm)
[at center of unit]

## Corner Through Wall Installation:

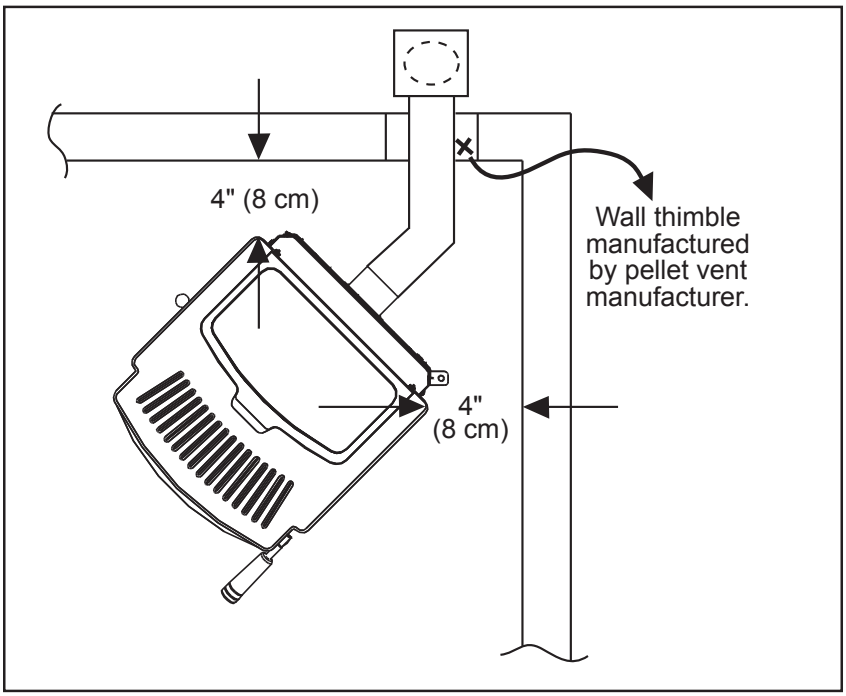


Figure 7: Corner Installation.

## Horizontal Exhaust Through Wall Installation:

**Vent installation: install vent at clearances specified by the vent manufacturer.**
A chimney connector shall not pass through an attic or roof space, closet or similar concealed spaces, or a floor, or ceiling. Where passage through a wall or partition of combustible construction is desired, the installation shall conform to CAN/CSA-B365 Installation Code for Solid-Fuel-Burning Appliances and Equipment. Only use venting of L or PL type with an inside diameter of 3 or 4 inches (7.6 or 10.1 cm).

1. Choose a location for your stove that meets the requirements stated in this manual and allows installation with the least amount of interference to house framing, plumbing, wiring, etc.
2. Install a non-combustible hearth pad (where necessary).
3. Place the appliance 15" (37.5 cm) away from the wall. If the stove is to be set on a hearth pad, set the unit on it.
4. Locate the center of the exhaust pipe on the stove. Extend that line to the wall. Once you have located the center point on the wall, refer to pellet vent manufacturer installation instructions for correct hole size and clearance to combustibles.
5. Install the wall thimble as per the instructions written on the thimble. Maintain an effective vapour barrier in accordance with local building codes.
6. Install a length of 3" (75 mm) or 4" (100 mm) vent pipe into the wall thimble. The pipe should install easily into the thimble.
7. Connect the exhaust vent pipe to the exhaust pipe on the stove. Seal the connection with high temperature silicone.
8. Push the stove straight back, leaving a minimum of 4" (10 cm) clearance from the back of the stove to the wall. Seal the vent pipe to the thimble with high temperature silicone.
9. The pipe must extend at least 12" (30 cm) away from the building. If necessary, bring another length of pipe (PL type) to the outside of the home to connect to the first section. Do not forget to place high temperature silicone around the pipe that passes through the thimble.

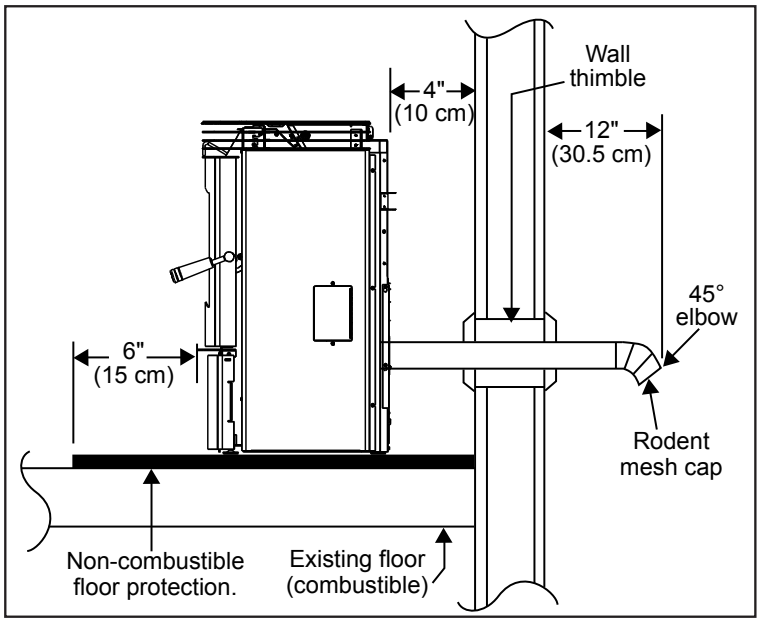


**Figure 8: Straight through wall Installation.**

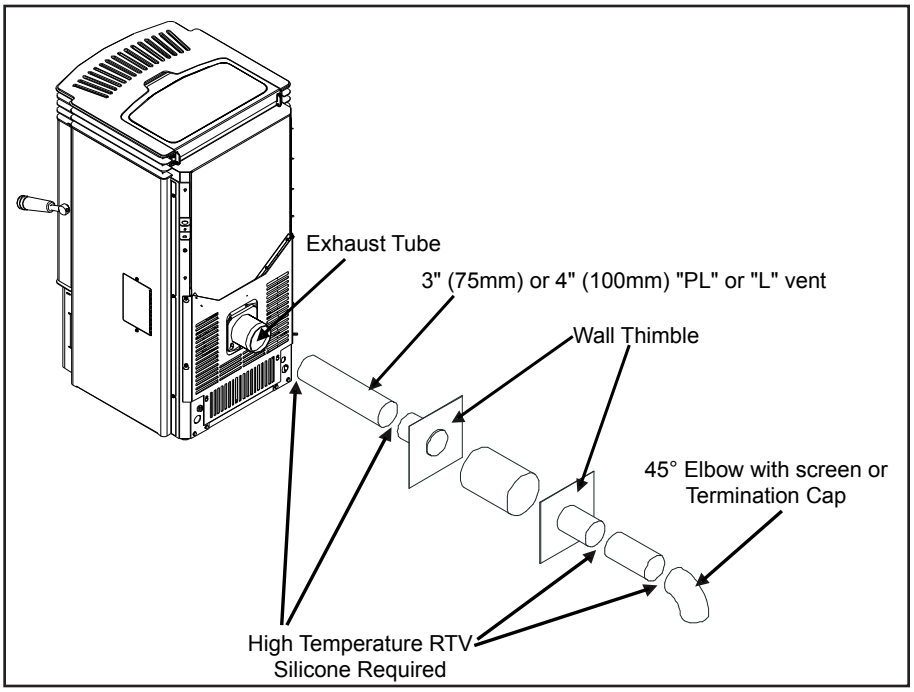


**Figure 9: Venting to use with straight through wall Installation.**

10. Install a vertical pipe, or if all requirements for direct venting are met, install vent termination. The stainless steel cap termination manufactured by the vent manufacturer is recommended. However, when the vent terminates several feet above ground level and there are no trees, plants, etc. within several feet, a 45° elbow can be used as termination. The elbow must be turned down to prevent rain from entering.

**NOTE:**

- Some horizontal through wall installations may require a "T" and 3 to 5 feet (91 to 152 cm) of vertical pipe outside the building to help naturally draft in the unit.
- This may be required if a proper burn cannot be maintained, after the stove has been tested and the airflow set.
- This is due to the back pressure in the exhaust caused by airflow around the structure.
- All sections of pipe must have three (3) screws evenly spaced and all horizontal and vertical vent sections located within the house must have a bead of high temperature silicone installed on the male end of the pipe before installation to create a gas tight seal.

## Through Wall With Vertical Rise and Horizontal Termination Installation - Freestanding:

A 45° elbow with a rodent screen may be used in place of the termination cap (or stainless steel termination hood).

Figure 10 is the recommended installation set up.

Figure 11 is the installation to use if there is a concrete or retaining wall in line with exhaust vent on a pellet stove. The termination must be 12" (30 cm) from the outside wall and 12" (30 cm) above the ground.

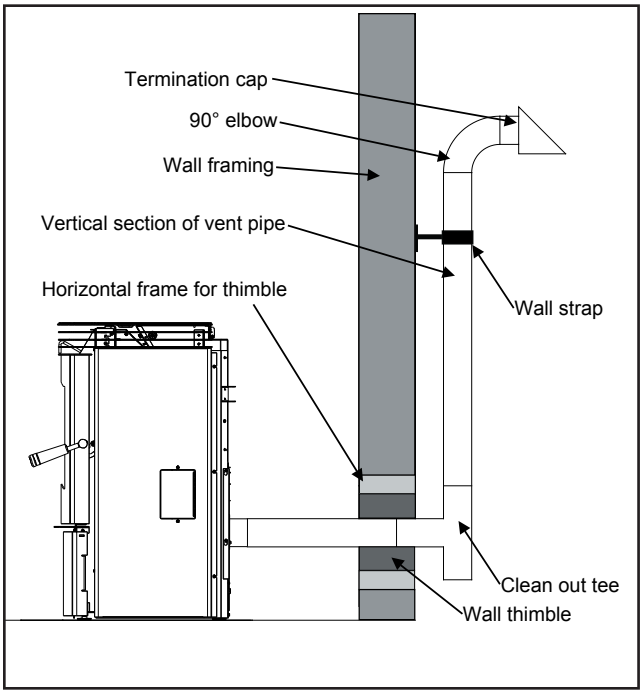


**Figure 10: Venting horizontally with rise.**

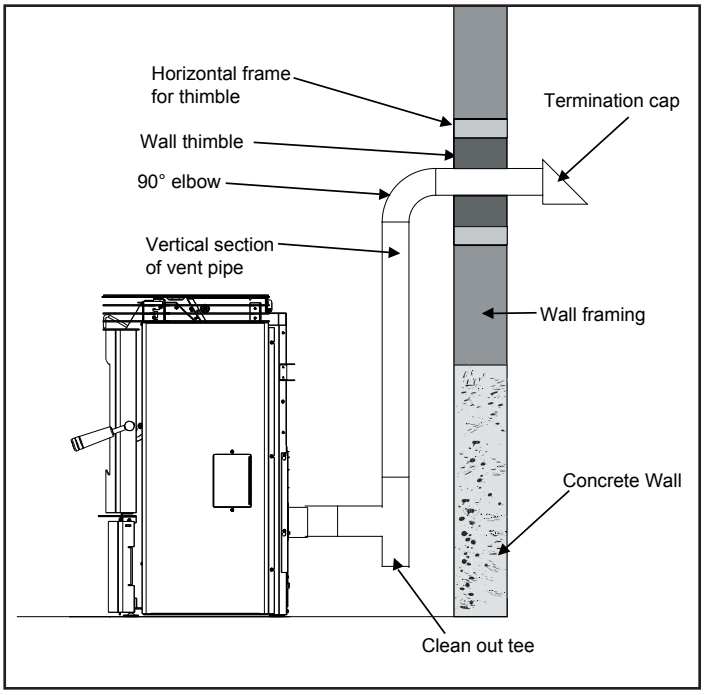


**Figure 11: Venting with concrete wall behind unit .**

## Inside Vertical Installations:

1. Choose a stove location that is ideal. See the section "Deciding Where to Locate your Pellet Appliance."
2. Place a non-combustible hearth pad where necessary.
3. Place the unit on the hearth pad (if installed on a carpeted surface) and space the unit in a manner so when the pellet vent is installed vertically, it will be 3" (7.5 cm) away from a combustible wall.
4. Install the tee with clean out.
5. Install the pellet vent upward from there. When you reach the ceiling, make sure that the vent goes through the ceiling fire stop. Maintain a 3" (7.5 cm) distance to combustibles and keep attic insulation away from the vent pipe. Maintain an effective vapor barrier.
6. Finally, extend the pellet vent to go through the roof flashing.
7. Ensure that the rain cap is approximately 24" (600 mm) above the roof.

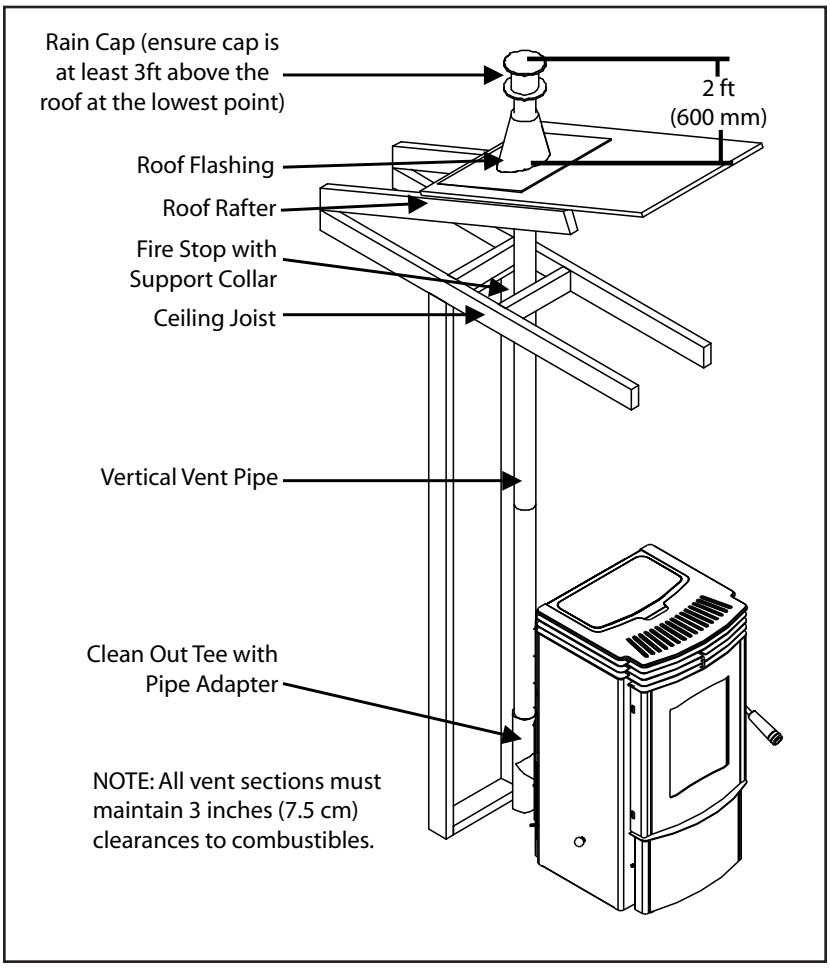


**Figure 12: Inside Vertical Installation.**

## Outside Vertical Installations:

To accomplish a outside vertical pipe installation, follow steps 1 through 5 in the "Inside Vertical Installations - Freestanding" section and then finish it by performing the following (refer to Figure 13).

1. Install a tee with clean out on the outside of the house.
2. Install PL vent upward from the tee. Make sure that you install support brackets to keep the vent straight and secure.
3. Install ceiling thimble and secure the flashing as you go through the roof.
4. Ensure that the rain cap is approximately 24" (600 mm) above the roof.

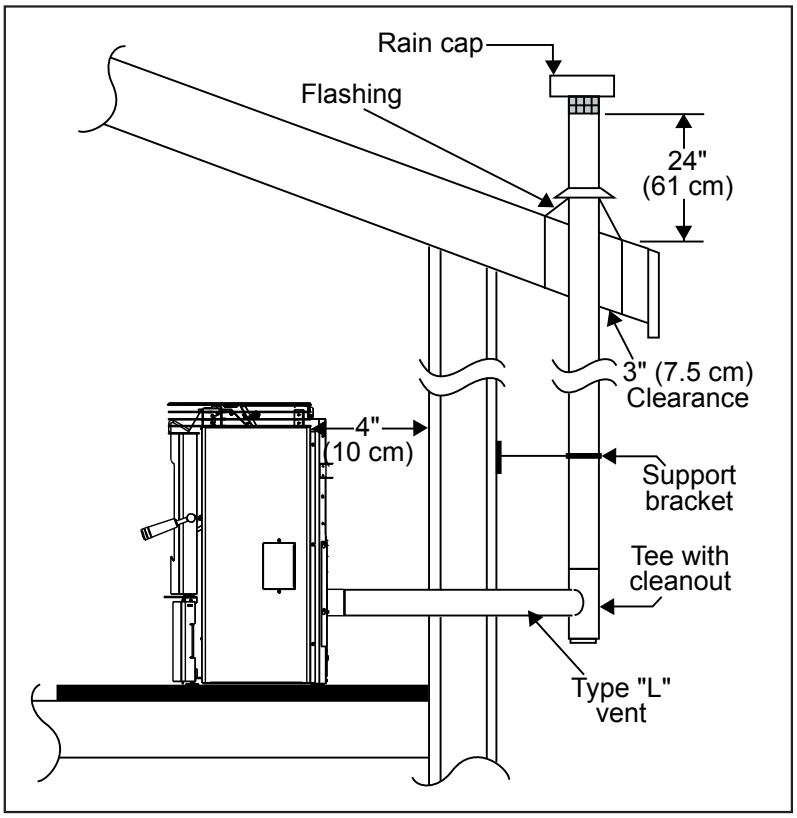


**Figure 13: Outside Vertical Installation.**

## Hearth Mount Installation:

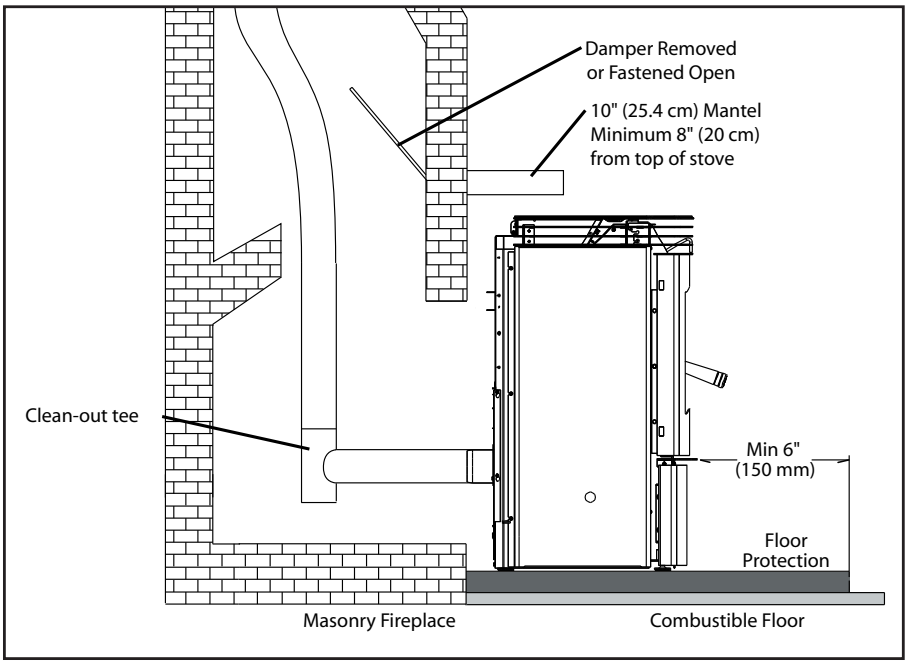


**Figure 14: Freestanding hearth mount installation.**

Refer to Figures 14 and 15.

1. Install the hearth pad.
2. Lock fireplace damper in the open position.
3. Install a positive flue connector at the fireplace dampers.
4. Connect a tee or a 90° elbow to the exhaust pipe.
5. Install flexible stainless steel liner or listed pellet vent to the top of the chimney.

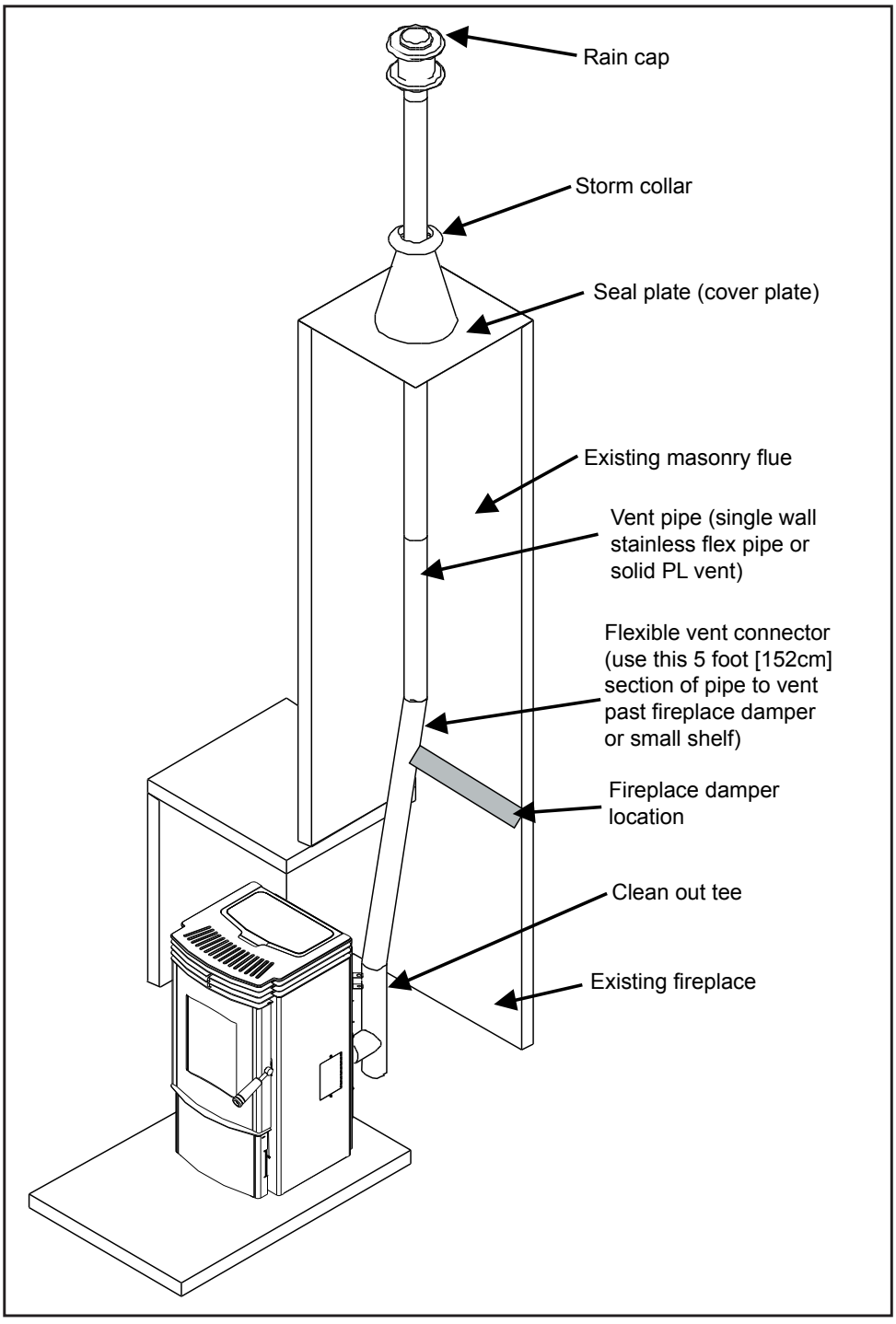


**Figure 15: Freestanding hearth mount installation overview.**

## Exterior Mounted Exhaust Blower:

The Bern can be equipped with an externally mounted exhaust blower. This optional kit includes all components necessary to install the exhaust blower on any vertical wall surface.

Choose a location for your stove that meets the requirements stated in your manual and allows installation with the least amount of interference with house framing, plumbing, wiring, etc.

Included in the Exterior Mounted Exhaust Blower Kit are:
1 - Exhaust blower housing box.
1 - Blower cover plate.
1 - Hardware bag

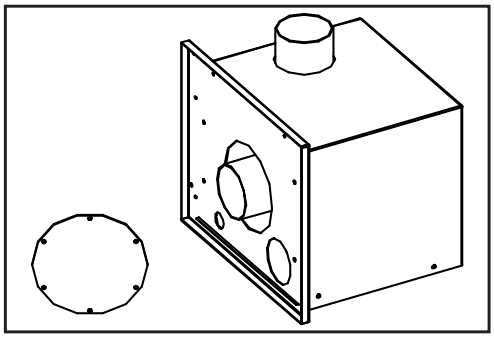

**Figure 16: Exterior Blower Kit.**

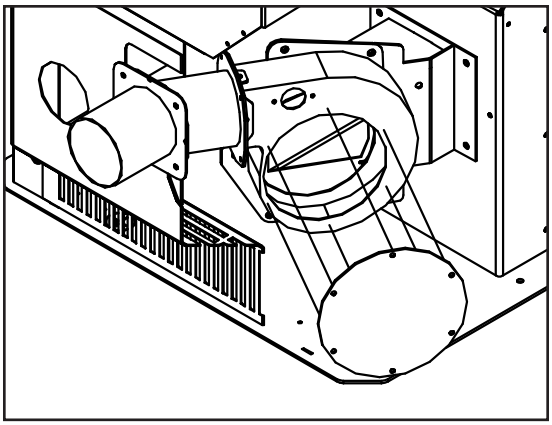

**Figure 17: Exterior Blower Kit.**

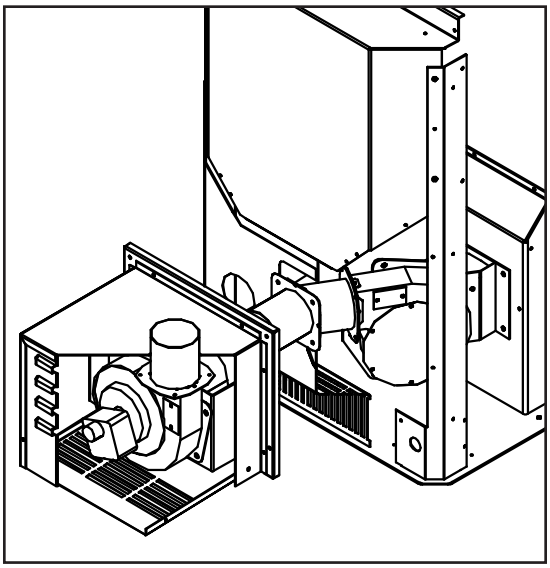

**Figure 18: Exterior Blower Kit cut-through.**

1. Remove the left hand cabinet side by removing the two (2) screws down the front. Loosen the three screws on the back of the cabinet side and remove panel.

2. Loosen the six (6) screws that hold the back grill in place. Lift the back grill off the screws.

3. Disconnect the Exhaust blower wires from the wire harness. Remove the exhaust blower motor from the housing; six (6) screws. Cover hole in housing with cover plate provided (see Figure 17).

4. Remove the cover from the exhaust blower housing box.

5. Install the exhaust blower housing box into the pipe placed through the wall thimble, seal with high temperature silicone. Fasten the box to the wall with (4) four screws, seal edges of box to wall with clear silicone.

6. Drill a hole through the wall thimble plate for the electrical wires. Pass the armored cable through the wall thimble. Use the strain relief provided. **Do not pass cable through vent hole.**

7. Install the Exhaust Blower motor into the external exhaust blower housing box. Make the electrical connections to the wire harness and exhaust blower.

8. Replace the cover on the Exhaust Box and the back grill of the stove and ensure the screws are tightened down.

9. Install vertical pipe as instructed in appropriate section.

## Typical Through Wall With Exterior Blower Kit Installation - Horizontal Termination:

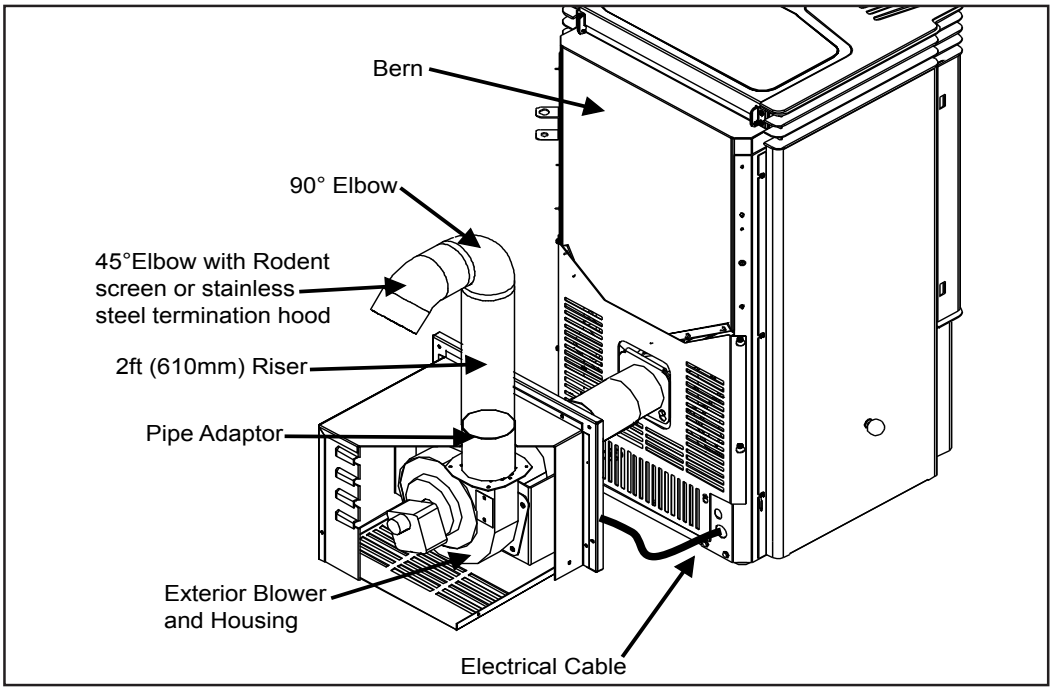


**Figure 19: Through Wall Installation with Exterior Blower Kit.**

**NOTE:**
Ensure that all interior vent connections are sealed by placing a small bead of high temperature silicone around each chimney connection.
Also ensure that all vertical vent sections are properly supported and that all clearances to combustibles are maintained in accordance with the vent manufacturer's specifications.

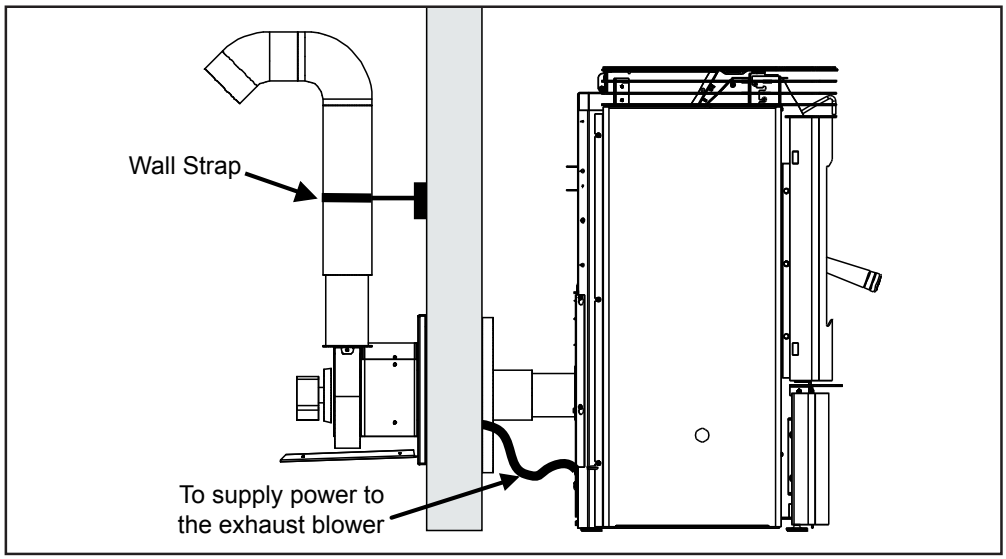


**Figure 20: Through Wall Installation with Exterior Blower Kit; Side View.**

Install an amour coated electrical cable from the exhaust blower housing, through the wall thimble plate and attach to the pre drilled hole in the left hand rear hopper pillar. Hook up to wires from the exhaust blower wiring harness.

**All electrical connections must be in accordance to local code requirements**

## Typical Through Wall With Exterior Blower Kit Installation - Vertical Termination:

Follow the previous pages for through wall installations. Ensure that vent pipe is properly secured to wall using wall straps. Maintain clearances to combustibles on vent pipe as well as unit.

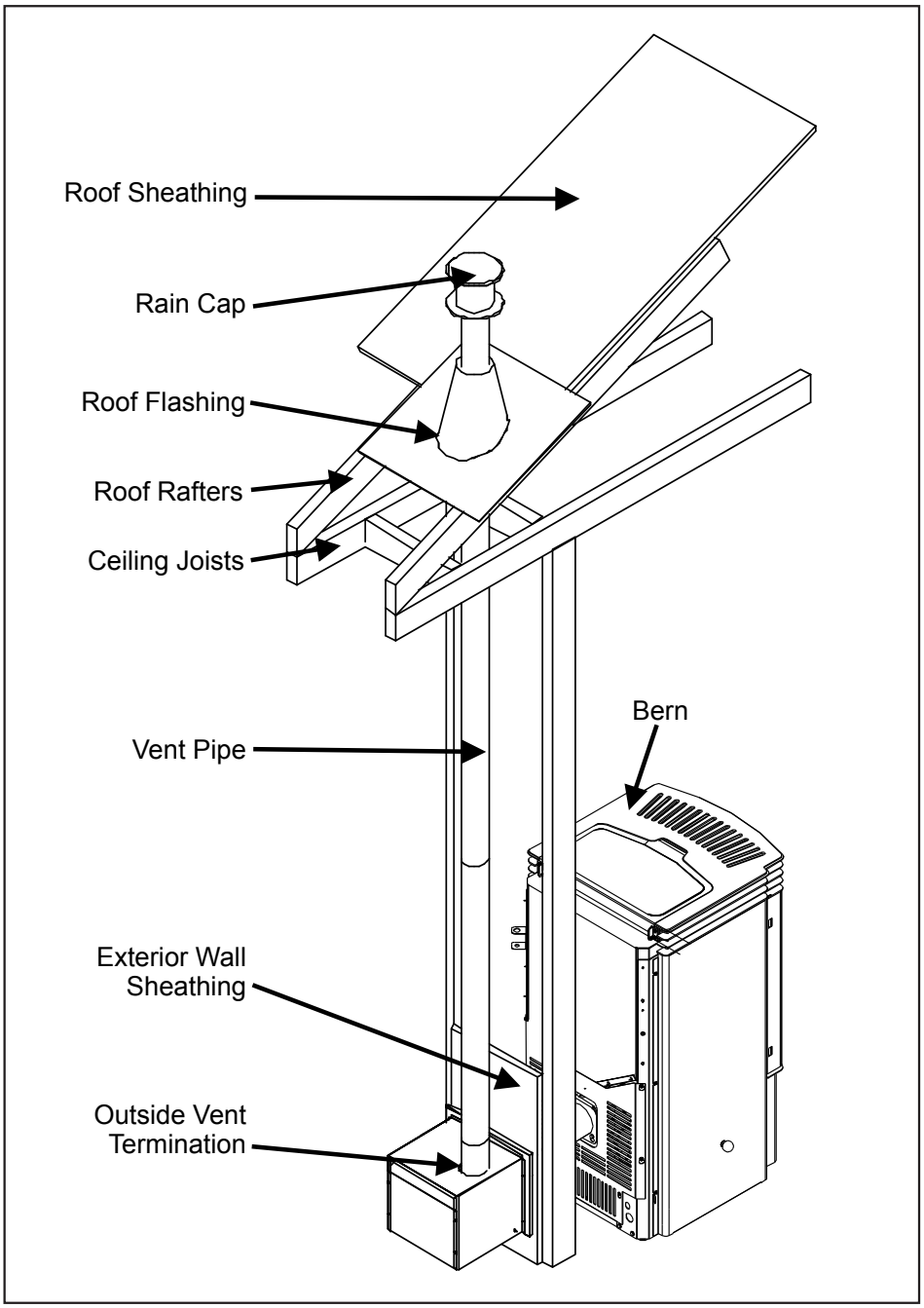


**Figure 21: Through Wall Installation with Exterior Blower Kit; Vertical Termination.**

# Installation

## Thermostat Installation:

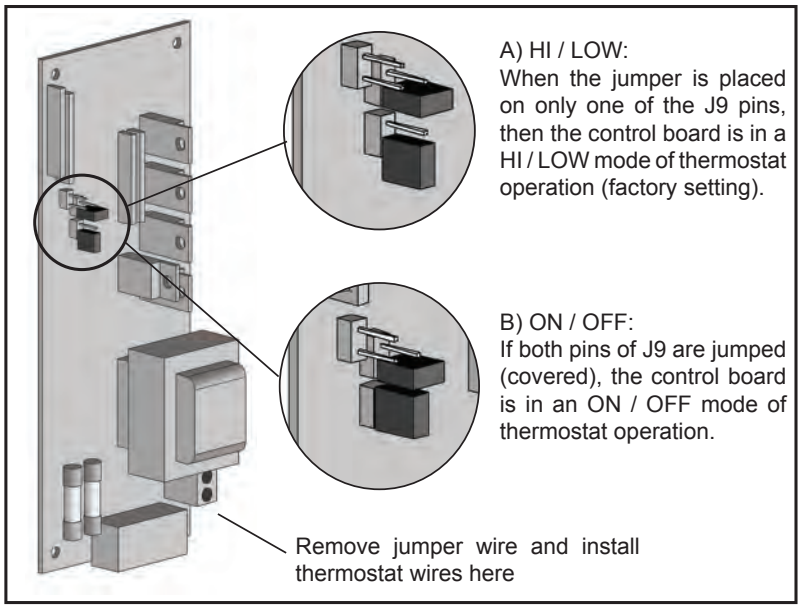


**Figure 22: Circuit Board.**

This control board can be placed into two different modes: When the jumper J9 is not jumped then the control board is in a HI / LOW mode operation. If the control board is placed with J9 jumped then the control board is in a ON / OFF mode of operation. In the ON /OFF thermostat mode, the unit will shut OFF when the thermostat is not calling for heat. When the thermostat calls for heat, the unit will go through an ignition sequence once again and relight.

1. Install the wall thermostat in a location that is not to close too the unit but will effectively heat the desired area.
2. Install a 12 or 24 Volt Thermostat using an 18 x 2 gauge wire from the unit to the thermostat.

If the unit has been placed in the HI / LOW mode, the unit will be taken to a low or idle setting when the thermostat is not calling for heat. When the thermostat calls for heat, the unit will go to the setting that is displayed on the control board Heat Indicator. If the heating load is not great enough when the stove is on low, the high limit switch will turn the stove off and the switch will have to be manually reset. To reset the high limit switch, remove the right cabinet side. The switch is found behind the control panel. Avoid setting off the high limit switch.

## Optional Slider/Damper Installation:

**NOTE: <u>NOT FOR USE IN GERMANY</u>**

If you wish to adjust the slider damper externally (NOT REQUIRED), please follow the instructions below.

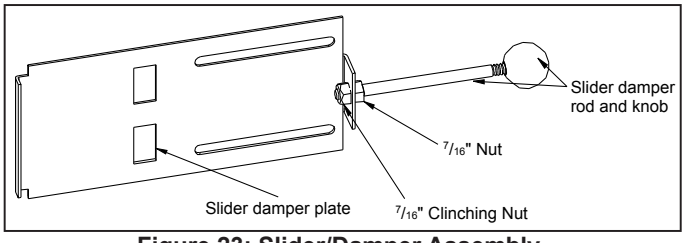


**Figure 23: Slider/Damper Assembly.**

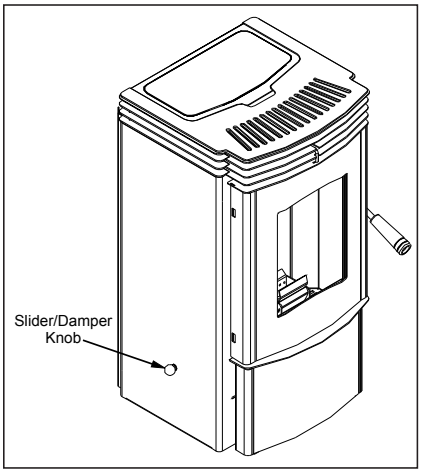


**Figure 24: Slider/Damper Knob.**

1. To install the OPTIONAL slider damper rod, remove the left cabinet side and locate the slider damper plate. Install the 7/16" inch nut onto the slider damper rod, thread all the way to the end of the threads on rod.
2. Slide rod through the hole in the slider damper plate and install the 7/16" clinching nut onto the rod and tighten completely onto the slider damper plate.
3. Re-install the cabinet side. Install the black knob on the end of the rod. Check slider damper for smooth operation.

## Slider/Damper Set-Up:

This is used to regulate the airflow through the pellet stove. The slider damper should be set by a trained technician using magnehelic.

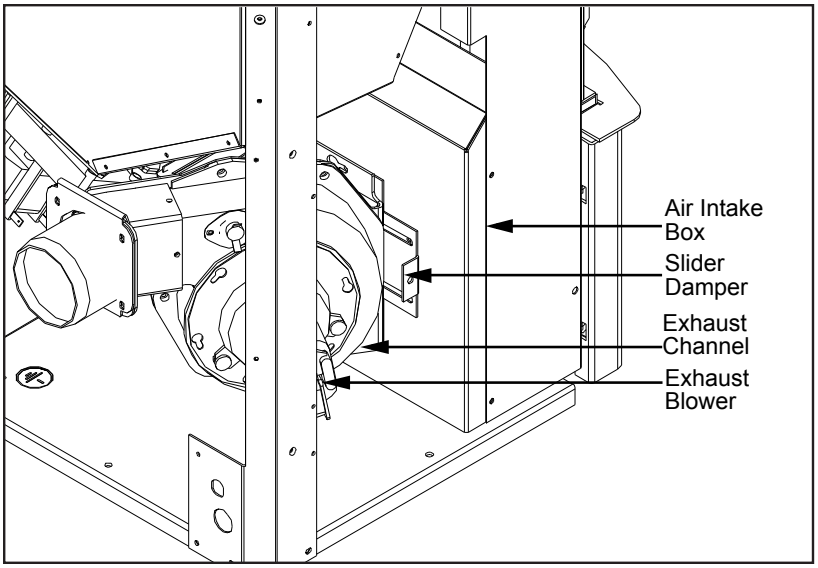


**Figure 25: Slider/Damper Plate in Unit.**

The slider damper is located behind the left side panel. To open the left side panel, undo the one screw located in the upper front corner of the cabinet side between the louvers. Also loosen three screws down the back of the side panel.

The combustion exhaust blower is a variable speed blower controlled by the heat output button. This blower will decrease the vacuum pressure inside the stove and as the heat output button is turned down. The vacuum pressure inside the firebox will increase as the combustion exhaust blower increases in speed (higher heat output setting).

If the fire should happen to go out and the heat output indicator has been set on the lowest setting, the Slider Damper should be pushed in slightly, decreasing the air in the firebox.

If, after long periods of burning, the fire builds up and overflows the burn pot or there is a build up of clinkers, this would be a sign that the pellet quality is poor, this requires more primary air, the slider damper must be pulled out to compensate. Pulling the slider damper out gives the fire more air.

The easiest way to make sure that an efficient flame is achieved is to understand the characteristics of the fire.

- A tall, lazy flame with dark orange tips requires more air – Open slider (pull out) slightly.
- A short, brisk flame, like a blowtorch, has too much air – Close slider (push in) slightly.
- If the flame is in the middle of these two characteristics with a bright yellow/orange, active flame with no black tips then the air is set for proper operation.



**Figure 26: Efficient Flame.**

**SPECIAL NOTES:**

Pellet quality is a major factor in how the Pellet stove will operate. If the pellets have a high moisture content or ash content the fire will be less efficient and has a higher possibility of the fire building up and creating clinkers (hard ash build-up).

**IMPORTANT:** Taking a reading of vacuum pressure inside the firebox with a magnehelic gauge should be used to set the slider for best combustion. **The best settings are a reading of approximately 0.11 0.12 inches of water column (27.4 - 29.9 Pa) on the high fire setting. Some fuels may require higher or lower settings.** The reading can be taken from the ⅛" (3 mm) hole located on the front of the unit below the ash shelf.

## Optional Panel Kit:

**This kit must be installed before the unit is started.**

### Tools Required:

- T-20 screwdriver

### Kit Components:

| Quantity | Description |
|---|---|
| 1 | Left Cab Panel |
| 1 | Right Cab Panel |
| 1 | Hopper Lid |
| 20 | #8 T-20 screws (⅜" long) |
| 2 | Hopper Bracket |
| 2 | Bushing ¼" O.D. x ⅛" long |

Please ensure that all components are supplied with this kit. If components are missing or have been damaged, contact your dealer, distributor or courier company before starting this installation.

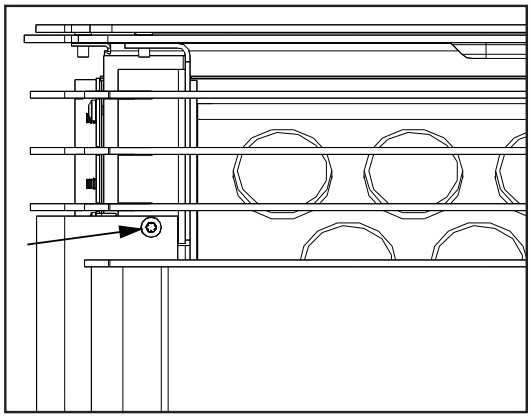

**Figure 27: Screws above door top corner.**

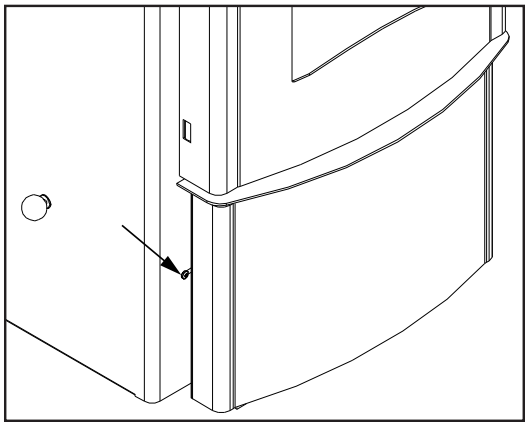

**Figure 28: Screw behind ash box.**

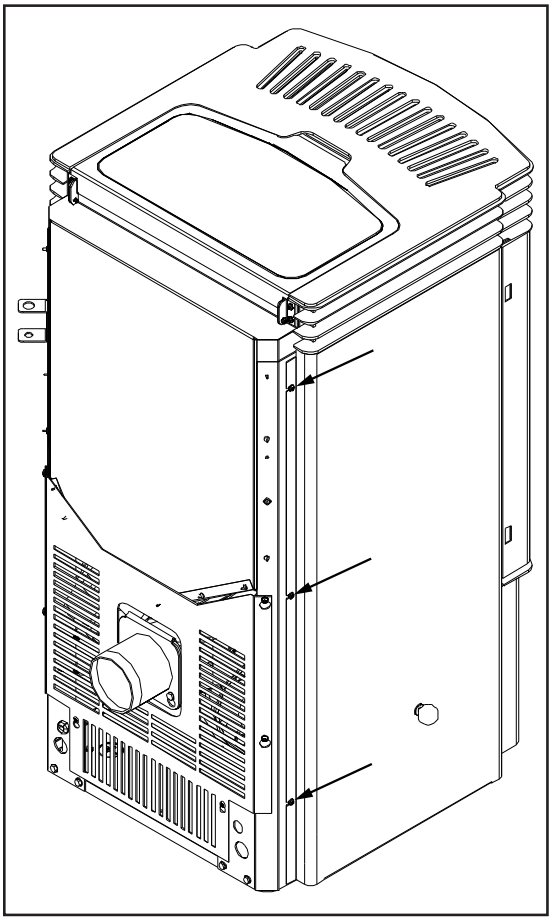

**Figure 29: Screws at back of the cab side.**

### Installing the Panels:

1. Remove the screws above the door on both sides (Figure 27).
2. Ensure the screws behind the ash box, one on each side (Figure 28) and the three (3) on each side at the back (Figure 29) are loosened.
3. Slide the three (3) slots at the back of the cab panels under the three (3) screws at the back.
4. Optional for Left Side: Line up the slider rod with the hole in the cab panels, slide it through, and install the knob.
5. Slide the front of the cab panels over the screw behind the ash box.
6. Install the screw above the door and tighten all screws.

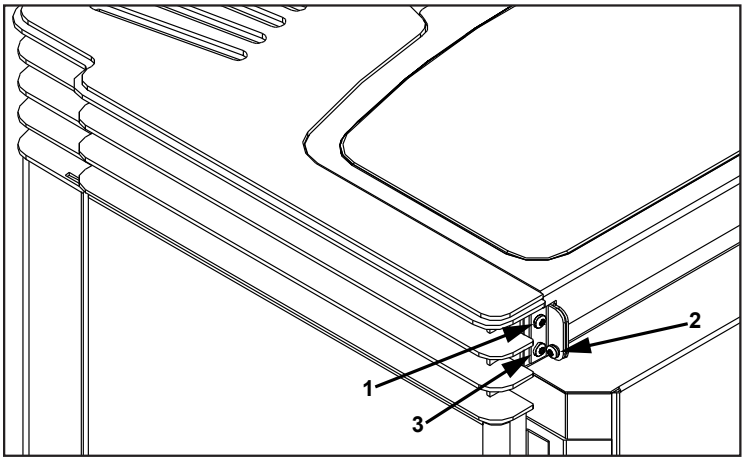


Figure 30: Installing Hopper Lid.

**Installing Hopper Lid:**

1. Attach the hopper brackets to the back of the unit with a screw in each top holes of the brackets (#1 in Figure 30). Do not tighten these screws until all six (6) screws are in place.
2. Lay the hopper lid in place, slide the bushing into the bracket, and attach the lid to the brackets (#2 in Figure 30). The screw must go through the bushing in the bracket then into the hopper cover.
3. Install the screw in the bottom hole on both brackets (#3 in Figure 30).
4. Let the hopper lid lay flat on the stove top then tighten the four (4) bracket screws.

## Optional Fan Kit:

1. Please check your fan for damage, if it has been damaged, contact your dealer, distributor or courier company to have the fan replaced before starting this installation.
2. Remove both cab panels. Remove the screws above the door on both sides (Figure 27) and ensure the screws behind the ash box, one on each side (Figure 28) and the three (3) on each panels at the back (Figure 30) are loosened. Slide the front of the cab panels out then slide the back of the cab panels out from under the three (3) screws at the back (Figure 29). Note: The slider knob will need to be removed if installed.
3. Slide the fan into place between the bracket (see Figure 31 & 32).
4. Using a flat head screwdriver or a ¼" socket fasten the fan in place with two (2) screws on each side.
5. Plug the white and purple wires into the fan.
6. Close the cab panels by following the instructions in step 2 in reverse.

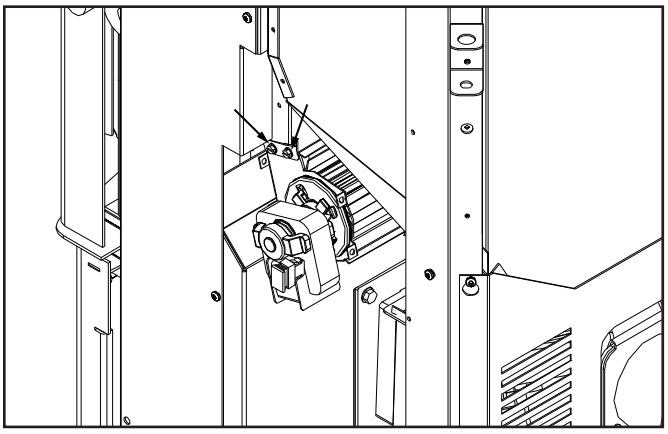

Figure 31: Behind the right cab panels.

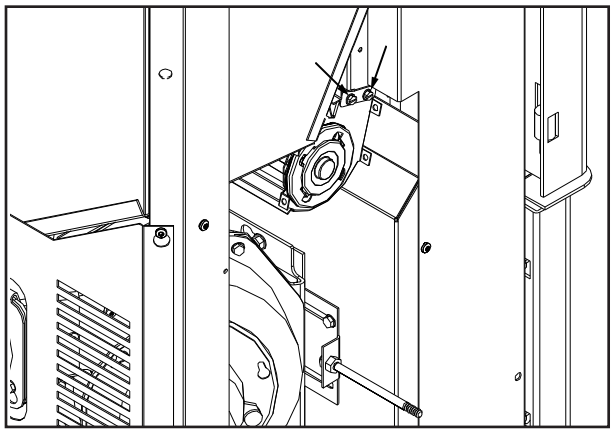

Figure 32: Behind the left cab panels.

# Troubleshooting

**DO NOT:**

- Service the stove with wet hands. The stove is an electrical appliance, which may pose a shock hazard if handled improperly. Only qualified technicians should deal with possible internal electrical failures.
- Do not remove from the firebox any screws without penetrating oil lubrication.

**WHAT TO DO IF:**

1. The stove will not start.
2. The stove will not operate when hot.
3. The exhaust blower will not function normally.
4. Light # 2 on Heat output bar flashing.
5. Auger light flashes but auger motor does not turn at all
6. The 200 °F (93 °C) high limit temperature sensor has tripped.
7. The convection blower will not function normally.
8. Igniter- the pellets will not light.
9. Control settings (Heat Level) has no effect on the fire.
10. The stove keeps going out.

***NOTE: All troubleshooting procedures should be carried out by qualified technicians or installers.**

**1. The stove will not start.**

✓Make sure the stove is plugged in and the wall outlet is supplying power..

✓If the Control Board has been placed in the ON /OFF thermostat mode, then turn the thermostat up to call for heat.

✓Check the Heat Level Indicator. - If the # 2 light is flashing (see the # 2 light is flashing)

✓Check the fuses on the circuit board (see "Troubleshooting - Fuses").

✓If the unit still does not start, contact your local service dealer for service.

**2. The stove will not operate when hot.**

✓Check the Heat Level Indicator if a fire is not detected, or if the fire has gone out **the #3 light will flash** because the Exhaust Temperature Sensor's contacts have opened.

✓Check the hopper for fuel.

✓Incorrect air damper setting. - Excessive air may consume the fire too quickly before the next drop of fuel, leaving completely unburned fuel in the burn pot liner. - Insufficient air will cause build up, further restricting the air flow through the Burn Pot Liner. This in turn will cause the fuel to burn cold and very slowly. Fuel may build up and smother the fire. In this case clean the burn pot. **(NOTE: unit may require a change to the vent system or installation of fresh air to correct Air to Fuel ratio problems).**

✓Combustion Blower failure. - The Combustion Blower is not turning fast enough to generate the proper vacuum in the fire box. Visual Check – is the blower motor turning.

✓Check the Exhaust Blower voltage across the blower wires (>=220V on #5 setting and >= 150V on #1 setting). – Replace the Circuit Board if the Voltage reading is less than 150 V. with a line voltage >220 V AC.

✓Check Vacuum levels in the exhaust channel by bypassing the Vacuum Switch, then remove the Vacuum hose from Vacuum Switch. Check exhaust vacuum readings by placing the open end of the Vacuum Hose on a Magnahelic Gauge (readings must be above .10" W.C. on low fire).

If the motor fails to reach a 0.10" W.C. readings, then replace the Combustion Blower.

✓Poor Quality Fuel – Insufficient energy in the fuel to produce enough heat to keep the stove burning or operational.
✓Exhaust Temperature Sensor failure. – Bypass sensor located on Exhaust Blower if stove now operates properly, the unit may require cleaning or a new sensor. Contact your local dealer for service.
✓Check the fuses on the circuit board (see "Troubleshooting - Fuses").

**3. The exhaust motor will not function normally.**
✓Open the left side access panel; check all connections against the wiring diagram.
✓See "2. The stove will not operate when hot." section.

**4. Light # 2 on Heat output bar flashing**
(The Vacuum Switch contacts have opened for more than 15 sec.)
✓Pinch, break or blockage in Vacuum Hose - Check hose for pinch points or damage, replace or re-route as required. Blow out Vacuum Hose
✓Blocked Hose Barb on Exhaust Channel - Use a paper clip to clean out Hose Barb or remove the Vacuum Hose from the Vacuum Switch and blow into the hose to remove blockage.
✓Blocked exhaust / venting system - Have stove and venting cleaned and inspected.
✓Severe negative pressure in area where unit is installed - Check the operation by opening a window, does this solve the problem? If it does, install fresh air intake to unit or room. Venting system may require vertical section to move termination into a low pressure zone.
✓Vacuum Switch failure - Bypass the vacuum switch, if this corrects the problem check for above problems before replacing the Vacuum Switch.
✓Damage to gray wires between Circuit Board and Vacuum Switch - Inspect wires and connectors
✓Combustion Blower failure - The Combustion Blower is not turning fast enough to generate the proper vacuum in the Exhaust Channel. Visual Check; is the blower motor turning? Check the Exhaust Blower voltage across the blower wires (>=220V on #5 setting and >= 150V on #1 setting). – Replace the Circuit Board if the Voltage reading is less than 150 V. with a line voltage >220 V AC.
✓Check Vacuum levels in the exhaust channel by bypassing the vacuum switch, then remove the Vacuum hose from Vacuum Switch. Check exhaust vacuum readings by placing the open end of the Vacuum Hose on a Magnahelic Gauge. (readings must be above .10" W.C. on low fire).
If the motor fails to reach a 0.10" W.C. readings, then replace the Combustion Blower
**To reset Circuit Board after a trouble code - push the ON/OFF button**

**5. Auger light flashes but auger motor does not turn at all**.
✓If the Auger gear box does not turn but the motor's armature does try to spin then the auger is jammed. – Try to break apart jam by poking at the jam through the drop tube. If this fails then empty the hopper and remove the Auger Cover **Remember to re-seal the cover after installation**
✓Check the fuses on the circuit board (see "Troubleshooting - Fuses").

**6. The 200 °F ( 93 °C) high limit temperature sensor has tripped.**
✓Reset sensor and determine cause – was it Convection Blower failure
✓Check the fuses on the circuit board (see "Troubleshooting - Fuses").

**7. The convection blower will not function normally.**

✓Clean all grill openings at the back and below unit .

✓Press the fan button; does the fan come on? Press again to verify that the blower turns on; if, not contact your local dealer for service.

**8. Ignitor- the pellets will not light.**

✓Everything else in the stove operates but the ignitor will not light the pellets.

✓Make sure the burn pot liner is up tight and square to the ignitor tube by pushing the burn pot back against the ignitor tube.

✓Check to see if the exhaust blower is operating. If not, contact your local dealer for service.

✓Check the fuses on the circuit board (see "Troubleshooting - Fuses").

**NOTE:** The ignitor should be bright orange in color. If not replace the ignitor.

**9. Control settings (Heat Level) has no effect on the fire.**

✓NOTE: If the system light is flashing the Control Board has complete control of the unit. When the units system light becomes solid then control of the unit is given back to the operator.

✓If there is no control of the Heat Level button make sure the thermostat is calling for heat.

✓Call your local dealer for service.

**10. The stove keeps going out.**

If the stove goes out and leaves fresh unburned pellets or cigarette-like ashes in the burn pot liner, the fire is going out before the stove shuts off.

✓Check to see that the Slider / Damper is in the correct position (set with a magnehelic gauge).

✓Turn the Heat Level up slightly (poor quality pellets will require slightly higher settings).

✓Set the auger trim till the #1 and #5 lights are illuminated.

If the stove goes out and there are partially burned pellets left in the burn pot liner, the stove has shut down due to a lack of air, exhaust temperature, or power failure.

✓Adjust the Slider / Damper.

✓Check to see if the stove needs a more complete cleaning.

✓Turn the Heat Level up slightly (poor quality pellets will require slightly higher settings).

✓Did the power go out?

✓Contact your local Dealer for service.

## Fuses:

F1 is the fuse to the inside of the circuit board controls. If F1 has blown there may have been an input power overload or a short in the convection fan.

F2 fuse closest fuse to the outside edge of the circuit board controls. If fuse F2 has blown then there was a electrical overload problem with one of the following parts: ignitor, auger motor, high limit switch, or exhaust blower.

# Wiring Diagram

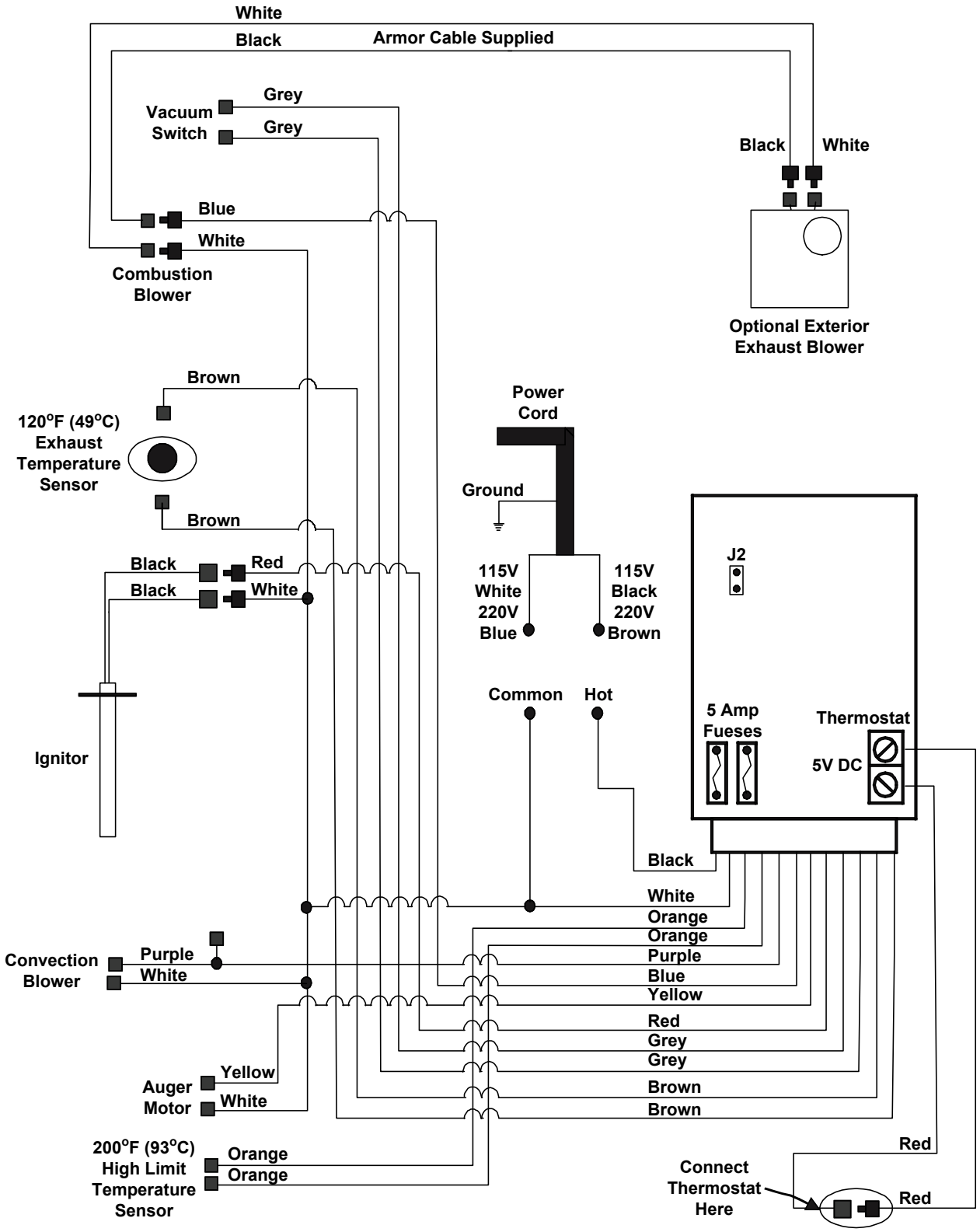

# Parts List

| Reference Number | Description | Part Number |
|---|---|---|
| 1 | 120°F (49°C) Ceramic Fan Temperature Sensor | EC-001 |
| 2 | Auger Motor - 220V | EF-001-220V |
| 3 | High Limit Temp Sensor 200°F (93°C) Manual Reset | EF-016 |
| 4 | Vacuum Switch - 220V | EF-017-220V |
| | Silicone Hose | EF-018 |
| | Aluminum Hose Barb | EF-019 |
| | Shoulder Bolt, Hardened Bush & Nut (Set of 2) | EF-124 |
| | Auger Brass Bushings (Set of 2) | EF4i-065 |
| 5 | Door Hinge Bracket | EF5-135 |
| 6 | CE Power Cord - 220V | 20-010-220V |
| 7 | Leveling Legs (Set of 4) | 20-018 |
| | Hardened Bushing | 20-020 |
| 8 | Circuit Board Decal | 50-179 |
| 9 | 400 Watt Ignitor - 220V | 50-646 |
| | Circuit Board 5 Amp Fuse - 220V (Pair) | 50-834 |
| 10 | Exhaust Blower Assembly - 220V | 50-900 |
| | 5/8" ID Auger Collar with Screw | 50-968 |
| 11 | Fan Kit | 50-1086 |
| | Bern CE Owners Manual | 50-1094 |
| | Bern CE Technical Manual | 50-1095 |
| 12 | Heat Exchanger Rod | 50-1154 |
| 13 | Glass with Gasket (356mm x 244mm) | 50-1155 |
| 14 | Slider Damper Rod & Knob | 50-1156 |
| | Wire Harness | 50-1157 |
| 15 | Latch Assembly | 50-1158 |
| 16 | Door Handle | 50-1159 |

# Parts List

| Reference Number | Description | Part Number |
|---|---|---|
| 17 | Circuit Board, 2 second on time - 230V | 50-1160 |
| 18 | Auger with Paddles | 50-1161 |
| 19 | Brick Panel Set with Insulation | 50-1162 |
| 20 | Side Louver - Right | 50-1163 |
| 21 | Side Louver - Left | 50-1164 |
| 22 | Burn Pot | 50-1166 |
| 23 | Burn Pot Liner | 50-1167 |
| 24 | Burn Pot Bottom | 50-1168 |
| 25 | Front Louvers | 50-1169 |
| 26 | Lid Set | 50-1171 |
| 27 | Upper Stove Top | 50-1172 |
| 28 | Lower Stove Top | 50-1173 |
| 29 | Hopper Guard | 50-1174 |
| 30 | Back Grill | 50-1175 |
| 31 | Starter Pipe | 50-1176 |
| 32 | Handle Bracket | 50-1177 |
| 33 | Draft Slider | 50-1178 |
| 34 | Door Assembly Complete | 50-1179 |
| 35 | Ash Pan Cover | 50-1180 |
| 36 | Ash Pan | 50-1181 |
| 37 | Ash Shelf Louver | 50-1182 |
| 38 | Cabinet Side Left | 50-1183 |
| | Panel Kit with Flush Controls | 50-1234 |
| | Burner Scraper Tool | 50-1254 |
| 39 | Circuit Board Control Panel Flush | 50-1270 |
| 40 | Cabinet Side Right for Flush Controls | 50-1271 |
| | Stainless Steel Panel Kit Flush Control - Left & Right | 50-1257 |

# Parts Diagram - Components

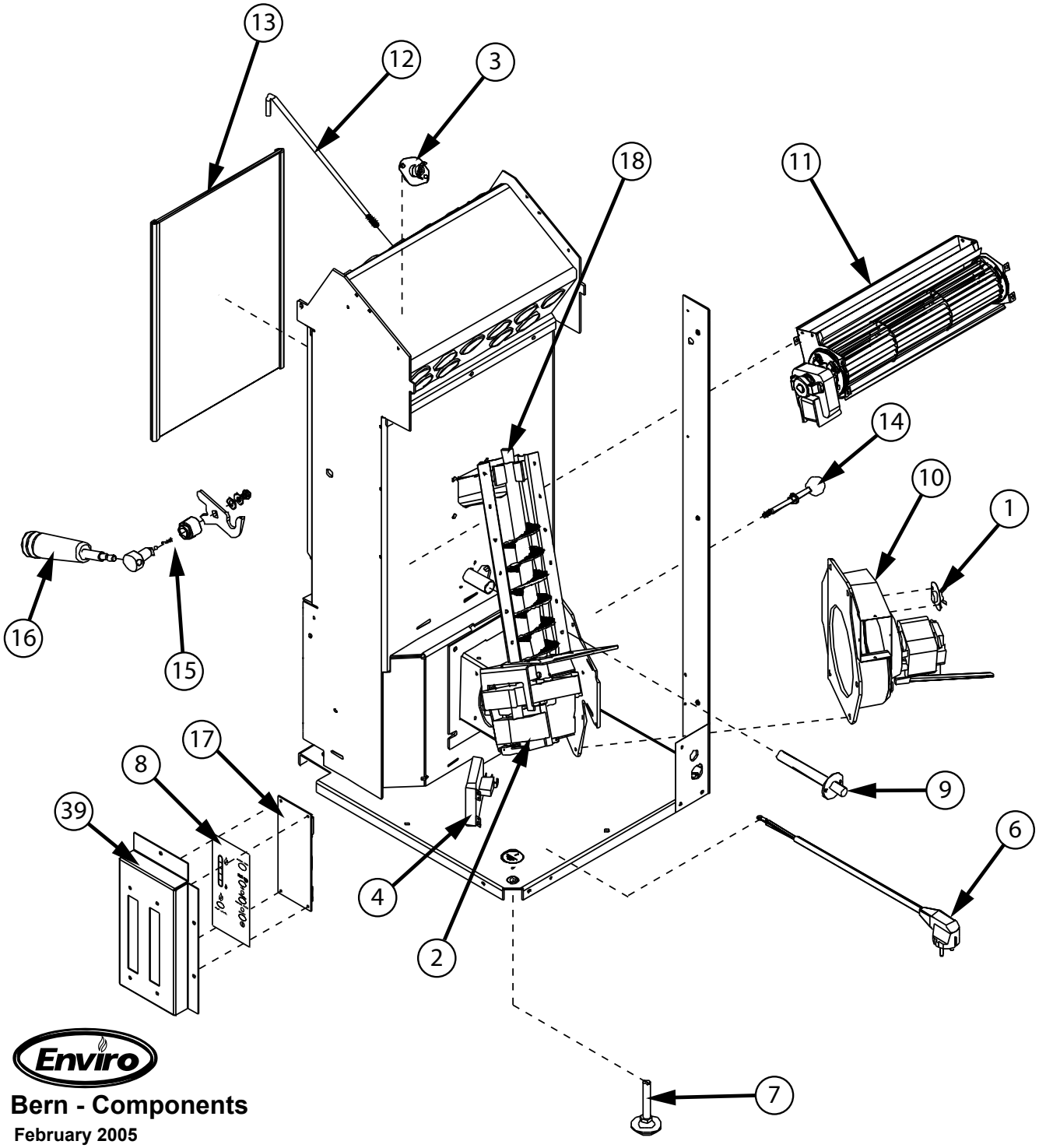


**Bern - Components**

**February 2005**

# Parts Diagram - Steel

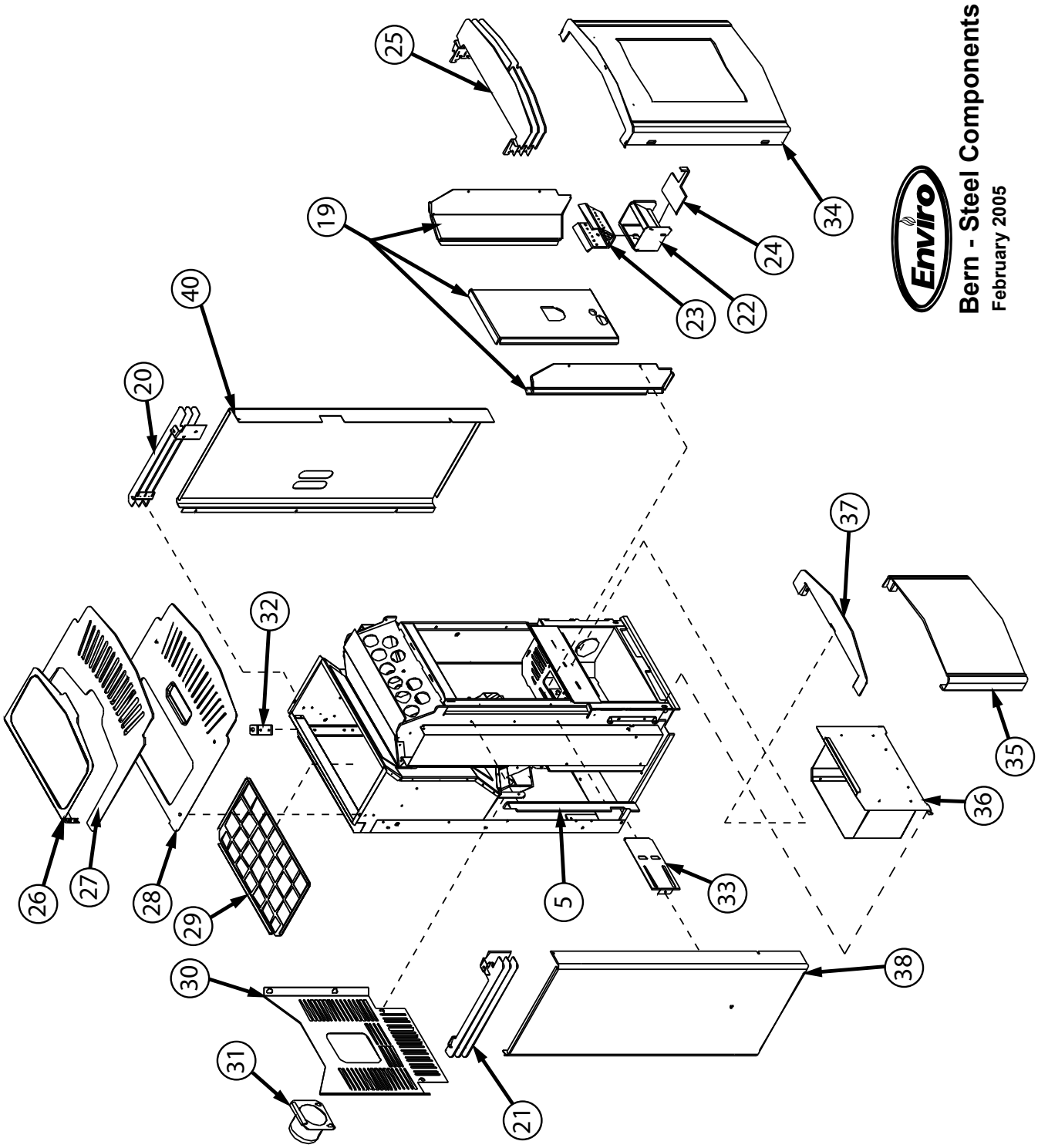

# Warranty

Sherwood Industries Ltd. gives a five year limited warranty on all steel manufactured parts. A one-year warranty is provided on all electrical components. The above limited warranties are extended only to the original purchaser.

There is no warranty on the following parts:

- Glass window
- Fiberglass rope gaskets
- refractory material
- burn pot liner
- paint
- enamel finish or gold plating where it applies

****NOTE:** The paint on the brick firebox lining may peel. This is due to the extreme conditions applied to the paint and is in no way covered under warranty.

**WHEN FILING A WARRANTY CLAIM PLEASE COMPLETE THE FOLLOWING INFORMATION ON AN OFFICIAL WARRANTY CLAIM FORM:**

**TO THE DEALER:**

- Name and address of dealer,
- Date of purchase
- Name, address and telephone number of purchaser
- Name, address and telephone number of installer
- Date of installation, and
- Serial number of the appliance

**Ensure that you specify the nature of the complaint, defect, periodical malfunction, etc.**

**TO THE DISTRIBUTOR:**

- Sign and verify that work and information are correct.
- Description and part # of any parts replaced.

The limited warranty covers defects in materials and workmanship as long as the products has been installed according to the manual's instruction. If the product is damaged or broken as a result of mishandling or misuse, the warranty does not apply. Removal and re-installation costs are not covered under this warranty.

It is the manufacturer's option whether to repair or replace the appliance. The shipping cost to and from the factory is to be paid by the consumer. All warranties by the manufacturer are set forth herein and no claim shall be made against the manufacturer on any oral warranty or representation.

The manufacturer assumes no responsibility for damage caused by household power fluctuations or power surges.

Under Warranty

**For the do-it-yourself Individual**

The consumer should be aware that the pellet appliance needs setting using tools that he/she might not have. It is recommended that you have a qualified installer install your pellet appliance

Sherwood Industries Ltd. reserves the right to make changes without any notice.

# Installation Data Sheet

The following information must be recorded by the installer for warranty purposes and future reference.

NAME OF OWNER:

_____

ADDRESS:

_____

_____

_____

PHONE:_____

NAME OF DEALER:

_____

ADDRESS:

_____

_____

_____

PHONE:_____

MODEL:_____

SERIAL NUMBER:_____

DATE OF PURCHASE: _____ (dd/mm/yyyy)

DATE OF INSTALLATION:_____(dd/mm/yyyy)

MAGNEHELIC AT INSTALL:_____

INSTALLER'S SIGNATURE:

_____

NAME OF INSTALLER:

_____

ADDRESS:

_____

_____

_____

PHONE:_____

MANUFACTURED BY:
SHERWOOD INDUSTRIES LTD.
6782 OLDFIELD RD. SAANICHTON, BC, CANADA V8M 2A3
www.envirofire.biz
August 4, 2006
C-11148