SHERWOOD INDUSTRIES IS AN ENVIRONMENTALLY RESPONSIBLE COMPANY. THIS MANUAL IS PRINTED ON RECYCLED PAPER.

PLEASE KEEP THESE INSTRUCTIONS FOR FUTURE REFERENCE

Enviro

Sienna

BY: SHERWOOD INDUSTRIES LTD

Tested & Listed By O-T-L Beaverton Oregon USA
C US
OMNI-Test Laboratories, Inc.

OWNER'S MANUAL

WARNING: If the information in this manual is not followed exactly, a fire or explosion may result causing property damage, personal injury or loss of life. Installation and service must be performed by a qualified installer, service agency or the gas supplier.

- Do not store or use gasoline or other flammable vapours and liquids in the vicinity of this or any other appliance.

- WHAT TO DO IF YOU SMELL GAS

- **Open windows/extinguish any open flame.**
- **Do not try to light any appliance.**
- **Do not touch any electrical switch; do not use any phone in your building.**
- **Immediately call your gas supplier from a neighbour's phone. Follow the gas supplier's instructions.**
- **If you cannot reach your gas supplier, call the fire department.**

- Installation and service must be performed by a qualified installer, service agency or the gas supplier.



INSTALLER: Leave this manual with the appliance.

CONSUMER: Retain this manual for future reference.

Massachusetts installations (Warning): This product must be installed by a licensed plumber or gas fitter when installed within the Commonwealth of Massachusetts. Other Massachusetts code requirements: Flexible connector must not be longer than 36in., a shut off valve must be installed; only direct vent sealed combustion products are approved for bedrooms/bathrooms. A carbon monoxide detector is required in all rooms containing gas-fired direct vent appliances. The fireplace damper must be removed or welded in the open position prior to installation of a fireplace insert.

This appliance may be installed in an aftermarket permanently located, manufactured home (USA only) or mobile home, where not prohibited by local codes.

This appliance is only for use with the type of gas indicated on the rating plate. This appliance is not convertible for use with other gases, unless a certified kit is used.

Safety Precautions

FOR SAFE INSTALLATION AND OPERATION OF YOUR "ENVIRO" HEATER, PLEASE CAREFULLY READ THE FOLLOWING INFORMATION:

- All ENVIRO gas-fired appliances must be installed in accordance with their instructions. Carefully read all the instructions in this manual first. Consult the building authority having jurisdiction to determine the need for a permit prior to commencing the installation.
- **NOTE:** Failure to follow these instructions could cause a malfunction of the fireplace, which could result in death, serious bodily injury, and/or property damage.
- Failure to follow these instructions may also void your fire insurance and/or warranty.

S**GENERAL**

- Installation and repair should be done by a qualified service person. The appliance should be inspected before the first use and, at least, annually by a qualified service person. More frequent cleaning may be required due to excessive lint from carpeting, bedding material, etc. It is imperative the control compartments, burners and circulating air passageways of the appliance be kept clean.
- Due to high temperatures, the appliance should be located out of high traffic areas and away from furniture and draperies.

Children and adults should be alerted to the hazards of high surface temperatures and should stay away to avoid burn or clothing ignition.

- Young children should be carefully supervised when in the same room as the appliance.
- Clothing or other flammable materials should not be placed on or near the appliance.

FOR YOUR SAFETY

- Installation and service must be performed by a qualified installer, service agency or gas supplier.
- This installation must conform to local codes or, in the absence of local codes, to the current CAN/CGA-B149 installation code (Canada) or National Fuel Gas Code ANSI Z223.1.2 (USA)
- To prevent injury, do not allow anyone who is unfamiliar with the stove to operate it.

- **To prevent injury, if the pilot or pilot and burners have gone out on their own, open the glass door and wait 5 minutes to air out before attempting to re-light the stove.**
- Always keep the area around these appliances clear of combustible material, gasoline and other flammable liquids and vapours.
- These appliances should not be used as a drying rack for clothing or for hanging Christmas stockings/ decorations.
- Due to the paint curing on the stove, a faint odor and slight smoking will likely be noticed when the stove is first used. Open a window until the smoking stops.

Always connect this gas stove to a vent system and vent to the outside of the building envelope. Never vent to another room or inside the building. Make sure the specified vent pipe is used, properly sized and of adequate height to provide sufficient draft. Inspect the venting system annually for blockage and signs of deterioration.

WARNING: Failure to position the parts in accordance with the diagrams in this booklet, or failure to use only parts specifically approved with this appliance, may result in property damage or personal injury.

WARNING: Do not operate with the glass front removed, cracked or broken. Replacement of the glass should be done by a licensed or qualified service person.

- Never use solid fuels such as wood, paper, cardboard, coal, or any flammable liquids, etc., in this appliance.
- Do not use this heater if any part has been under water. Immediately call a qualified service technician to inspect the heater and to replace any part of the control or gas control systems that have been under water.
- Do not abuse the glass by striking it or slamming the door shut.
- If the Sienna unit is pulled out of its installation, and the vent-air intake system is disconnected for any reason, ensure that the vent-air intake pipes are reconnected and re-sealed in accordance to the instructions noted in Initial Installation - Venting Fireplace Inserts.

Table of Contents

Safety Precautions....2
Table of Contents....3
Codes And Approvals....4
Specifications....5
- Rating Label Location....5
- Dimensions....5

Operating Instructions....7
- Pilot Lighting Instructions....7
- Burner Lighting....7
- Remote Controls - Optional....7
- Turn Off Unit....8
- Blower Speed....8
- Normal Sounds During Operation....8
- Adjusting Venturi Air Settings....8

Maintenance And Service....9
- Cleaning The Glass....9
- Cleaning The Firebox and Burner....9
- Replacing The Glass....9
- Cleaning The Plated Surfaces....9
- Glass Door Removal....10
- Burner & Blower Removal....10
- Fuel Conversion....11

Initial Installation....13
- Clearances to Combustibles....13
- Minimum Fireplace Size....14
- B-Vent Model....14
- Automatic Flue Gas Spill Switch - B-Vent Model Only....14
- Direct Vent Model....15
- Preparing Your Sienna For Installation....15
- Venting Fireplace Inserts....16
- Zero Clearance Fireplace Installation....17
- Electrical Requirements....18
- Gas Line Connection....19
- Converting A Direct Vent Fireplace To A B-Vent Fireplace....20

Secondary Installation....21
- Installation of Surround Panel....21
- Log Set and Ember Installation....22
- Removing The Brick Panel....25

Trouble Shooting....26
Parts List - Unit Components....27
Parts Diagram - Components....28
Parts Diagram - Burner....29
Parts List - Options....30
Parts Diagram - Options....31
Warranty....32
Installation Data Sheet....35

Codes And Approvals

DIRECT VENT: This type is identified by the suffix DV. This appliance draws all of its air for combustion from outside the dwelling, through a specially designed vent pipe system.

This appliance has been tested and approved for installations from 0 feet to 4500 feet (1372 m) above sea level.

BV: This Vented appliance draws all of its combustion air from the dwelling and must be vented using listed B or L vent. May also be vented through a conventional chimney using a chimney liner kit.

This appliance has been tested and approved for installations from 0 feet to 4500 feet (1372 m) above sea level.

In the USA: The appliance may be installed at higher altitudes. Please refer to your American Gas Association guidelines which state: the sea level rated input of Gas Designed Appliances installed at elevations above 2000 (610 m) feet is to be reduced 4% for each 1000 feet (305 m) above sea level. Refer also to local authorities or codes which have jurisdiction in your area regarding the de-rate guidelines.

In Canada: When the appliance is installed at elevations above 4500 feet (1372 m), the certified high altitude rating shall be reduced at the rate of 4% for each additional 1000 feet (305 m).

- This appliance has been tested by OMNI - Test Laboratories, Inc and found to comply with the established VENTED GAS FIREPLACE HEATER standards in CANADA and the USA as follows:

VENTED GAS FIREPLACE HEATER (SIENNA BV/DV; NG/LPG)

TESTED TO: ANSI Z21.88a-2003/CSA 2.33a-2003 VENTED GAS FIREPLACE HEATERS

CAN/CGA 2.17-M91 GAS-FIRED APPLIANCES FOR HIGH ALTITUDES

CSA P.4.1-02 TESTING METHOD FOR MEASURING ANNUAL FIREPLACE EFFICIENCY

This ENVIRO SIENNA Fireplace:

- Has been certified for use with either natural or propane gases. (See rating label.)
- Is not for use with solid fuels.
- Is approved for bedroom or bed sitting room. (**IN CANADA**: must be installed with a listed wall thermostat. **IN USA**: see current ANSI Z223.1 for installation instructions.)
- Installation must conform with local codes or, in the absence of local codes, with the National Gas and Propane Installation Code, CSA B149.1 in Canada, or the National Fuel Gas Code, ANSI Z223.1/NFPA 54 in the USA.
- Must be properly connected to an approved venting system and not connected to a chimney flue serving a separate solid fuel-burning appliance.
- Is not approved for closet or recessed installations.

IMPORTANT NOTICE (Regarding first fire up): When the unit is turned on for the first time, it should be turned onto high without the fan on for the first 4 hours. This will cure the paint, logs, gasket material and other products used in the manufacturing process. It is advisable to open a window or door, as the unit will start to smoke and can irritate some people. After the unit has gone through the first burn, turn the unit off including the pilot, let the unit get cold then remove the glass door and clean it with a good gas fireplace glass cleaner, available at your local ENVIRO dealer.

NATIONAL FIREPLACE INSTITUTE®

NFI

CERTIFIED

www.nficertified.org

We recommend that our gas hearth products be installed and serviced by professionals who are certified in the U.S. by the National Fireplace Institute® (NFI) as NFI Gas Specialists.

Specifications

Rating Label Location:

The rating label is located under the control panel and is attached to a rectangular metal sheet that is chained to the fireplace.

Dimensions:

Table 1: Sienna exterior dimensions. (Shaded dimensions shown in Figure 1 & 2.)

Surround Style	Distance	Direct Vent	B-Vent
Arched Surround	From Flue To Surround	14 11/16″ (376 mm)	14 9/16″ (370 mm)
	From Back/Sensor To Surround	17 5/16″ (439 mm)	18 7/8″ (479 mm)
33″ x 46″ (840 x 1930 mm) Surround	From Flue To Surround	14 ½″ (369 mm)	14 3/8″ (365 mm)
	From Back/Sensor To Surround	17 1/16″ (434 mm)	18 11/16″ (474 mm)
33″ x 46″ (840 x 1930 mm) Surround with Trim	From Flue To Trim	13 ¼″ (337 mm)	13 1/16″ (333 mm)
	From Back/Sensor To Trim	15 13/16″ (402 mm)	17 3/8″ (441 mm)

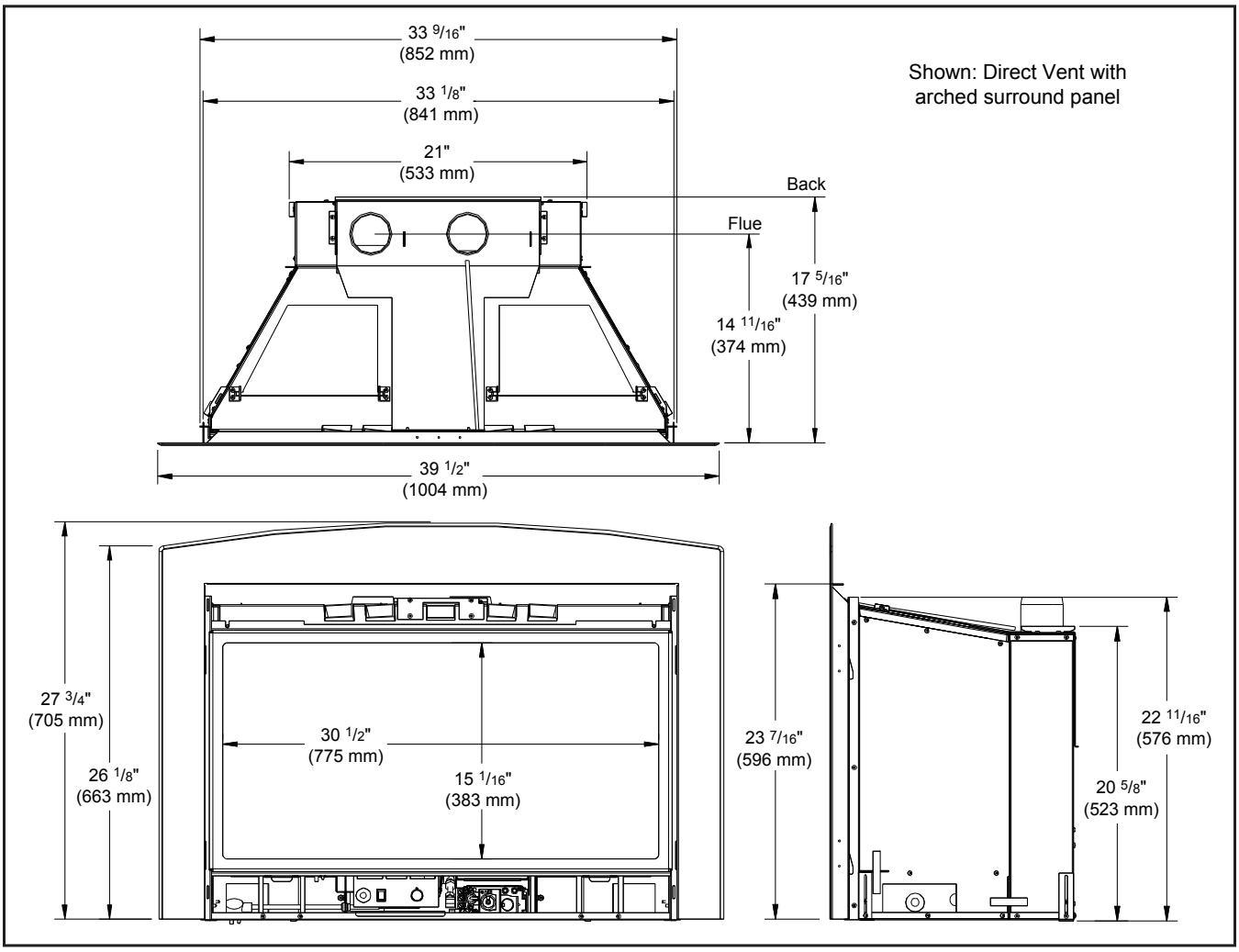

Figure 1: Sienna exterior dimensions; example 1.

Specifications

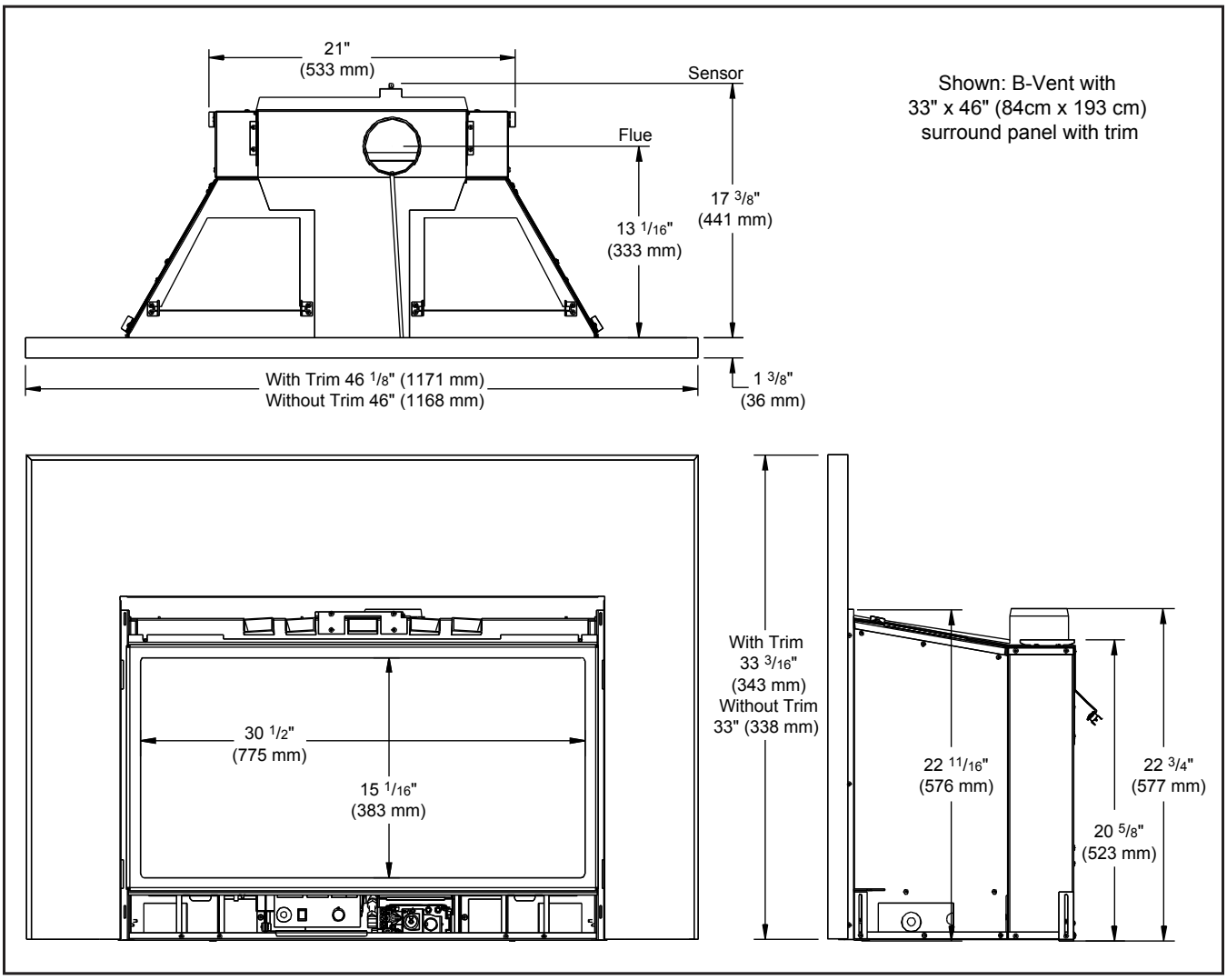

Figure 2: Sienna exterior dimensions; example 2.

Operating Instructions

For Your Safety, Read Safety Precautions And Lighting Instructions Before Operating

WARNING: IF YOU DO NOT FOLLOW THESE INSTRUCTIONS EXACTLY A FIRE OR EXPLOSION MAY RESULT, CAUSING PROPERTY DAMAGE, PERSONAL INJURY OF LOSS OF LIFE.

Pilot Lighting Instructions:

CAUTION: Hot while operating. Do not touch, severe burns may result. Keep children, clothing, furniture, gasoline or other flammable vapors away.

CAUTION: Do not operate this fireplace with the glass removed, cracked or broken. Replacement of the panel(s) should be done by a licensed or qualified person! This appliance needs fresh air for safe operation and must be installed with provisions for combustion and ventilation air. See installation and operating instructions manual. Keep burner and control compartment clean.
WARNING: Improper installation, adjustment, alteration, service or maintenance can cause injury or property damage, or loss of life. Refer to owner's information manual provided with this appliance. For assistance or additional information consult a qualified installer, service agency or the gas supplier. See installation and operating instructions accompanying appliance. Installation and service must be performed by a qualified installer, service agency, or the gas supplier.

FOR YOUR SAFETY READ BEFORE OPERATING

WARNING: IF YOU DO NOT FOLLOW THESE INSTRUCTIONS EXACTLY, A FIRE OR EXPLOSION MAY RESULT CAUSING PROPERTY DAMAGE, PERSONAL INJURY OR LOSS OF LIFE.

A) This appliance is equipped with a pilot, which must be lit by hand by following these instructions exactly.
B) BEFORE LIGHTING smell all around the appliance area for gas and next to the floor because some gas is heavier than air and will settle on the floor.
WHAT TO DO IF YOU SMELL GAS:
Do not try to light any appliance. Do not touch any electrical switch: do not use any phone in your building. Immediately call your gas supplier from a neighbor's phone. Follow the gas suppliers instructions. If you cannot reach your gas supplier, call the fire department.
C) Use only your hand to push in or turn the gas control knob; NEVER use tools. If the knob will not push in or turn by hand, do not try to repair it. Call a qualified service technician. Force or attempted repair may result in a fire or explosion.
D) Do not use this appliance if any part has been under water. Immediately call a qualified service technician to inspect the appliance and to replace any part of the control system and any gas control which has been under water.

LIGHTING INSTRUCTIONS

1. STOP! Read the safety information above on this label.
2. Turn off all electrical power to this appliance.
3. Turn off the gas control knob clockwise ↷ to the off position.
4. Open door. Wait flve (5) minutes to clear out any gas. Close door. If you smell gas STOP! Follow "B" in the above safety information. If you do not smell gas go to the next step.
5. Find pilot-located to the left under the front log. Turn the gas control knob counter-clockwise ↶ to "PILOT". Push the gas control in fully and hold, keep knob depressed for about 30 seconds after the pilot is lit. Release knob. If pilot goes out, repeat steps 4 through 5.

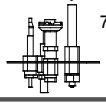

WARNING: this gas valve has a lockout device, which will not allow the pilot burner to be relit until the thermocouple has cooled. If the knob does not pop up when released, stop and immediately call your service technician or gas supplier.
If the pilot does not stay lit after several tries, turn the gas control knob to "OFF" and call your service technician or gas supplier.
6. Turn the gas control knob counter clockwise ↶ to the "ON" position. Flip the burner switch to "ON" THEN TURN THE "HI/LOW" knob to the desired setting.
7. Turn on the electrical power to the unit.

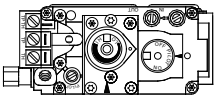

TO TURN OFF GAS TO APPLIANCE

1. Flip burner switch to "OFF"
2. Turn the gas control knob clockwise ↷ to the "OFF" position.
3. Turn off all electrical power to the appliance if service is to be performed.

C-10489

Figure 3: Lighting instruction label.

Burner Lighting:

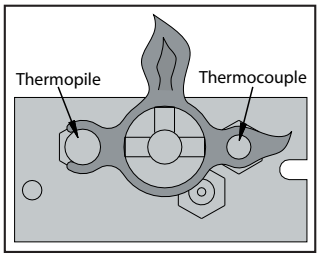

Figure 4: Pilot flame.

1. Make sure the pilot is lit.
2. Turn gas control knob COUNTER-CLOCKWISE to ON.
3. Flip the burner switch to ON.
4. Turn HI/LO knob to the desired flame height.
5. Turn on all electrical power to the unit.

NOTE: Check that all burner holes are lit.

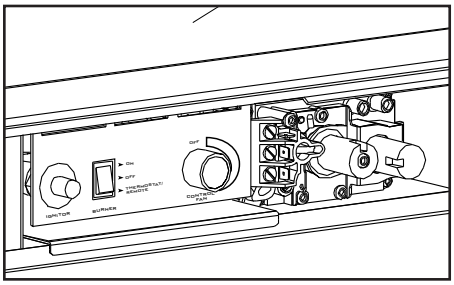

Figure 5: Control panel.

Remote Controls - Optional:

This fireplace can use an optional remote control or an optional cordless wall thermostat. If either of these are to be used to control the fireplace for the majority of the time, leave the ON/OFF switch (on the control panel) in the remote/thermostat position. Consult the instructions included with the remote/wall thermostat for operation guidelines.

Operating Instructions

For Your Safety, Read Safety Precautions And Lighting Instructions Before Operating

Turn Off Unit:

Flip switch to OFF to turn off burners only.

If the fireplace is to be turned off for the season, or for servicing, turn the gas shut off valve to OFF. If the unit is going to be serviced, turn off the electrical power to the unit as well.

NOTE: When the unit is turned on for the first time, it should be turned onto high, with the fan OFF, for the first two to four hours. This will cure the paint, logs, gasket material, and other products used in the manufacturing process. It is advised that a door or window be opened, as the unit will start to smoke, which can irritate some people. After the unit has gone through the first burn, turn the unit OFF, including the pilot, and let the unit get completely cold. Then remove the glass and clean it with a good gas fireplace glass cleaner, available at your local Enviro dealer. See "Door Removal" and "Cleaning The Glass" sections.

Blower Speed:

The blower will come on only when the fireplace is up to temperature (approximately 20 minutes). Turning the fan control knob will change the speed of the fan. To turn the blower off, turn the knob COUNTER-CLOCKWISE until it "clicks" off (Figure 6).

It is advisable not to operate the blower below 1/3 speed as it puts a strain on the windings of the blower and running the blower at lower speeds could also cause premature fan failure.

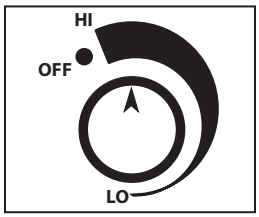

Figure 6: Fan control.

Normal Sounds During Operation:

Table 2: Normal Sounds.

Component	Sound & Reason
Focus & Fascia	Creaking when heating up or cooling down.
Burner	Light pop or poof when turned off; this is more common with LP units.
Temperature Sensor	Clinking when it senses to turn the blower on or off.
Pilot Flame	Quiet whisper while the pilot flame in on.
Blower / Fan	Air movement that increase and decreases with the speed of the blower. The blower is pushing the heat from the fireplace into the room.
Gas Control Valve	Dull click when turning on or off, this is the valve opening and closing.

Adjusting Venturi Air Settings:

There is one venturi adjustment.

Use this venturi adjustment lever, shown in Figure 7, to achieve a proper and efficient flame.

Adjust lever until the flame pattern is similar to Figure 37. Suggested pull out distances are ½" (13 mm) minimum for Natural Gas and ⅞" (22 mm) minimum for Propane.

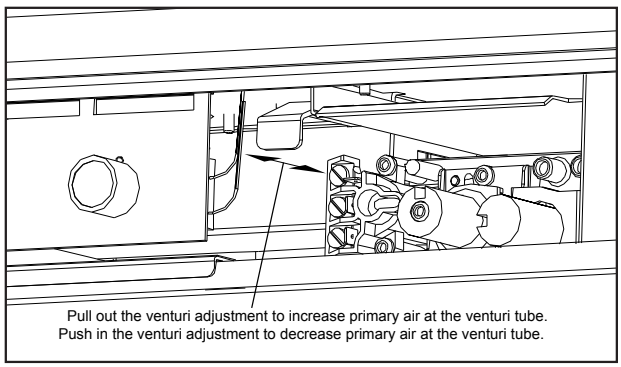

Figure 7: Adjusting the venturi air setting.

Maintenance And Service

Warning: Failure to position the parts in accordance with this manual, or failure to use only parts specifically approved with this appliance, may result in property damage or personal injury.

At least once a year, run through the following procedures to ensure the system is clean and working properly. Check the burner to see if all the ports are clear and clean. Check the pilot to make sure it is not blocked by anything (see Figure 4). The pilot flame should be blue with little or no yellow on the tips.

The venting system must be periodically examined; it is recommended the examination is done by a qualified agency.

Any safety screen or guard removed for servicing an appliance must be replaced prior to operating the appliance.

Cleaning The Glass:

When the fireplace is cool, remove the face of the fireplace along with the glass door. See Maintenance and Service - Glass Door Removal. Check the gasket material on the back of the glass, making sure that it is attached and intact.

During a cold start up, condensation will sometimes form on the glass. This is a normal condition with all fireplaces. However, this condensation can allow dust and lint to cling to the glass surface. Initial paint curing of the appliance can leave a slight film behind the glass, a temporary problem. The glass will need cleaning after the fireplace has cooled off from the first burn and about two weeks after first burn. **Use a mild glass cleaner and a soft cloth**. **Abrasive cleaners will damage the glass and plated surfaces.** Depending on the amount of use, the glass should require cleaning no more than two or three times a season. **Do not clean the glass when it is hot.**

Cleaning The Firebox and Burner:

Remove the logs carefully, as they are very fragile. Gently remove all the embers and rock wool and place on a paper towel. Vacuum the bottom of the firebox thoroughly. Carefully clean any dust off the logs and remove any lint from the burner and pilot. At this time, inspect the burner pan for cracking or severe warping. If a problem is suspected, contact the dealer. Check the logs for deterioration or large amounts of soot; a small amount on the bottom side of the logs is normal. Replace the logs and embers as in the Secondary Installation - Log Set and Ember Installation section. If new/more embers and rock wool are required, contact your nearest ENVIRO dealer.

Replacing The Glass:

WARNING: Do not operate appliance with the glass front removed, cracked or broken. Replacement of the glass from the door must be done by a licensed or qualified service person. The glass in the fireplace is a high temperature ceramic. If the glass is damaged in any way, a factory replacement is required (see Parts List). Wear gloves when handling damaged glass door assembly to prevent personal injury. When the glass door assembly is being transported, it must be wrapped in newsprint and tape and/or a strong plastic bag. **The glass must be purchased from an ENVIRO dealer. No substitute materials are allowed.**

Cleaning The Plated Surfaces:

Painted faces should be wiped with a damp cloth periodically. If a plated face has been purchased, it should be unpacked/unwrapped carefully to avoid getting anything on the surface of the finish, including cleaners, polish and finger prints. It is important to note that fingerprints and other marks can leave a permanent stain on plated finishes. **To avoid this, give the face a quick wipe with denatured alcohol on a soft cloth BEFORE lighting the fireplace.** Never clean the face when it is hot. Do not use other cleaners as they may leave a residue, which can become permanently etched into the surface.

Maintenance And Service

QUALIFIED INSTALLERS ONLY

Glass Door Removal:

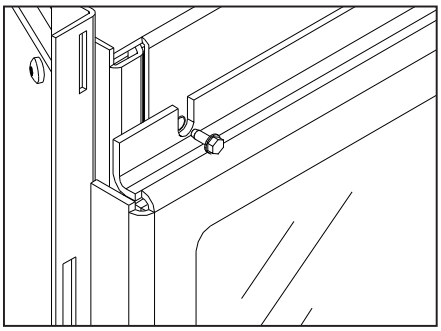

Figure 8: Top bolts for glass door.

Open the door by removing the two (2) $^{5}/_{16}$" bolts located at the top outside corners of the glass frame (see Figure 8). Lift the bottom of the door up and remove from unit (see Figure 9).

CAUTION GLASS MAY SEPARATE FROM DOOR.

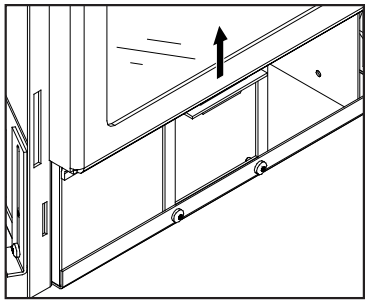

Figure 9: Bottom hooks for glass door.

Burner & Blower Removal:

1. Turn the unit off and allow the unit to cool completely.
2. Remove the fascia or louvers, open the door (see Maintenance and Service - Glass Door Removal), and remove the log set.
3. Remove the log support tray by lifting the back of the tray up and pull it out from under the lip. Take care to not knock the pilot and the side brick panels.
4. Remove the centre and top brick panels (see Secondary Instalation - Removing The Brick Panel).
5. Turn gas supply off and remove gas connection. Disconnect the wiring from the side of the appliance.
6. Remove the three (3) T-20 screws just above the burner top on the back firewall (see Figure 10) and the two (2) screws on each side below the burner top. Carefully remove the complete gas and electrical tray assembly from the firebox, ensuring that no wires or gas lines are damaged.

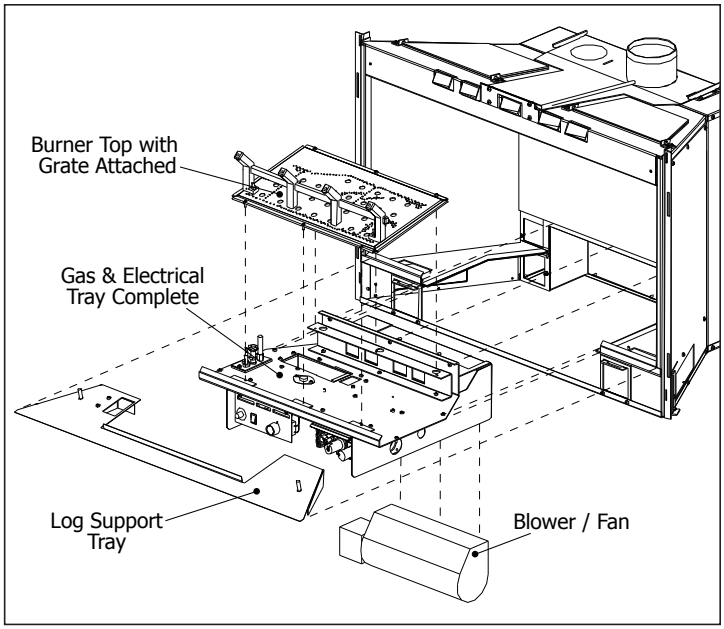

Figure 10: Removing burner and gas tray.

7. Remove the blower and housing from the gas tray assembly by removing the three (3) fastening screws located on the back of the gas tray assembly. Pull the fan out from under the gas tray. Disconnect the wiring from the fan temperature sensor and remove fan.
8. Hook up wires from the new blower to main wiring harness and fan temperature sensor. Install the blower in the reverse order as described in Step 7.
6. Reinstall the completed gas tray into the firebox, being careful not to damage any wires or gas lines. Properly secure the gas tray assembly in the firebox. Hook up gas lines and wiring harness. Perform a gas leak check on all gas line with a soap and water solution or an approved method.
7. Return unit to original location if moved. Re-install the log support tray, the brick panels, the logset (see Secondary Instalation - Log Set and Ember Installation), the door and the fascia or louvers.
8. Check burner and blower assembly for proper operation.

Caution: Bleed lines before lighting and light pilot with door open.

Fuel Conversion:

TO BE INSTALLED BY A QUALIFIED SERVICE AGENCY ONLY

Please read and understand these instructions before installing.

Warning: This conversion kit shall be installed by a qualified service agency in accordance with the manufacturer's instructions and all applicable codes and requirements of the authority having jurisdiction. If the information in these instructions is not followed exactly, a fire, explosion or production of carbon monoxide may result causing property damage, personal injury or loss of life. The qualified service agency is responsible for the proper installation of this kit. The installation is not proper or complete until the operation of the converted appliance is checked as specified in the manufacturer's instructions supplied with the kit.

Kit Parts List for Sienna:

1 - Orifice (NG #32 DMS or LP #49 DMS)
1 - Pilot Injector (NG 0.62 mm; LP 0.35 mm)
1 - Installation instruction sheet
1 - Conversion label

Carefully inspect all parts supplied with this conversion kit. If any parts have been damaged or are missing, contact your dealer, distributor or courier company to have them replaced before starting this installation.

Conversion Kit Installation:

1. Turn control knob on the gas valve to the "OFF" position and shut the gas supply off at the shut-off valve upstream of the unit. CAUTION: The gas supply must be shut off prior to disconnecting the electrical power and before proceeding with the conversion. Allow the valve and unit to cool down to room temperature.
2. Remove the glass as shown in the Maintenance and Service - Glass Door Removal.
3. Carefully remove the log set and ember material if they are installed.
4. Remove the burner as shown in the Maintenance and Service - Burner and Blower Removal.
5. Convert the burner orifice(s):
   a) Remove the main burner orifice with a ½ inch deep socket.
   b) Put a bead of pipe-thread sealant or approved Teflon tape on the orifice threads before installing into the brass elbow.
   c) Install the new orifice(s) from the kit into the brass elbow.
6. Convert the pilot injector:
   a) Pull the pilot hood straight up to access the pilot injector.
   b) Using a $^{5}/_{32}$" or 4 mm Allen key, remove the pilot injector.
   c) Install the new pilot injector supplied with this conversion kit. Simply screw the new injector inside the pilot hood using the Allen key,
   d) Reinstall the hood by placing the hood on the assembly, line up the key way, and snap into place.
7. Convert the SIT gas valve:
   a) Remove the black protection cap from the HI/LO knob by hand shown in Figure 11.

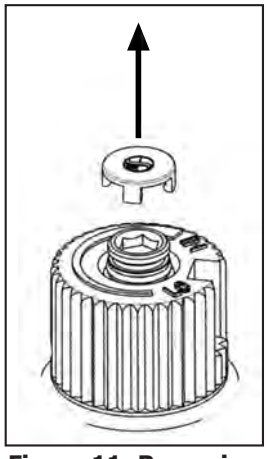

Figure 11: Removing valve cap.

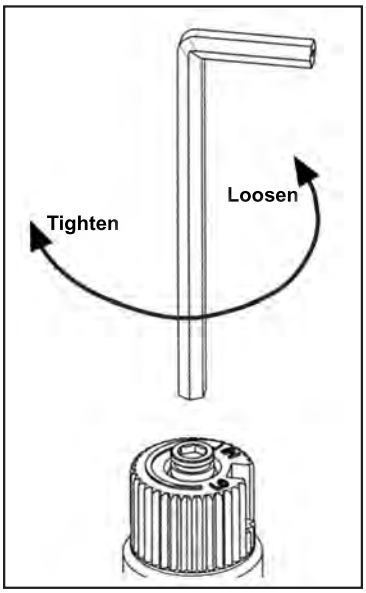

Figure 12: Removing valve screw.

b) Insert a 5/32" or 4 mm Allen wrench into the hexagonal key-way of the screw (see Figure 12), rotate it counter-clockwise until it is free and extract it.

c) Check that the screw is clean and if necessary remove dirt.

d) Flip the screw (refer to Figure 13).

e) Using the Allen wrench as shown in Figure 12, rotate the screw clockwise until a torque of 9 inch lbs. **WARNING!** Do not over tighten the screw. It is recommended that you grip the wrench by the short side.

f) Verify that if the conversion is from NG to LPG, the screw must be re-assembled with the red o-ring visible (refer to Figure 14). If the conversion is from LPG to NG, the red o-ring of the screw must be not visible.

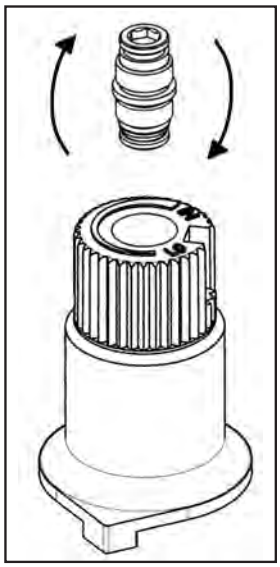

Figure 13: Flip valve screw.

g) Re-attach the black protection cap that was removed in step a (Figure 11).

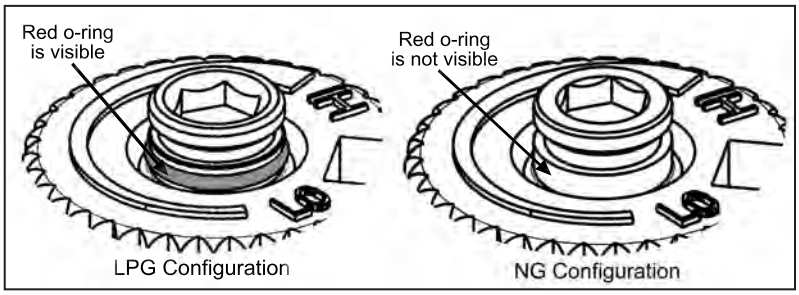

Figure 14: O-ring on valve screw.

8. Reinstall the burner, brick panels, log set, embers, and glass door. Also refer to Secondary Installation - Installing Log Set and Embers. When re-installing the burner, ensure that the burner to pilot hood relationship is similar to what is shown in Figure 15. On some units you will need to pay special attention when installing the burner that the venturi adjustment rod is properly installed into the venturi adjustment piece welded to the burner venturi tube

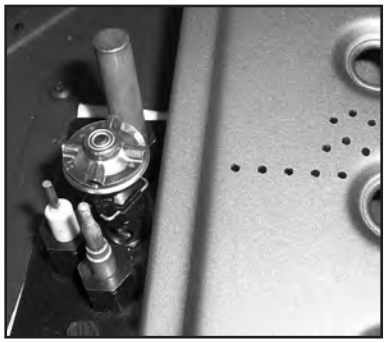

Figure 15: Burner to pilot hood relationship.

9. Reconnect the main gas line if it was disconnected and open the shut-off valve at the gas line to the unit.
10. Use a small brush to apply a warm soapy water solution to all gas connections (use half dish soap and half warm water). If a gas leak is present, bubbling will occur. Gas leaks can be repaired by using an approved pipe thread sealant or approved Teflon tape. NEVER USE AN OPEN FLAME WHEN TESTING FOR LEAKS. Check the gas pressure of the appliance, refer to Initial Installation - Gas Line Connection and Table 5.
11. Reconnect the electrical power to the unit.
12. Light the pilot and check for proper flames (see Figure 4). Light the burner in both high and low settings to verify proper burner ignition and operation and proper flame appearance. The amount of air to the venturi may need to be adjusted using the rod under the firebox (refer to Operating Instructions - Adjusting Venturi Air Settings). Also refer to Figure 37 for a flame appearance picture.
13. MAKE SURE that the conversion label is installed on or close to the rating label to signify that the unit has been converted to a different fuel type.

Initial Installation

WARNING: Operation of this heater when not connected to a properly installed and maintained venting system can result in carbon monoxide (CO) poisoning and possible death.

Clearances to Combustibles:

Maintain sufficient clearances for operation, service and maintenance.

- A clearance of 25 ½" (648 mm) minimum is required from the center of the unit to the sidewalls.
- A 2" (51 mm) wide mantel can be mounted at a minimum height of 39" (991 mm) from the bottom of unit.
- A 10" (254 mm) wide mantel can be mounted at a minimum height of 43" (1092 mm) from the bottom of unit.
- If installed at floor level, a minimum 16" (406 mm) non-combustible material must be installed in front of the unit.
- If installed on a 12" (305 mm) wide hearth raised a minimum height of 6" (152 mm), no floor protection is required.
- Refer to Figure 17 for additional required floor protection dimensions with different width hearths.

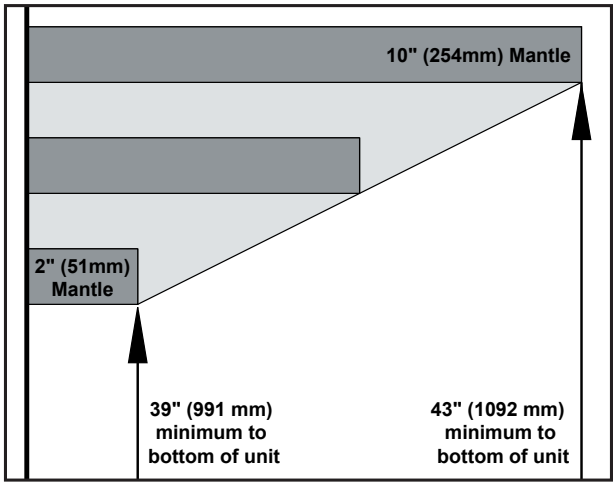

Figure 16: Mantle width and height.

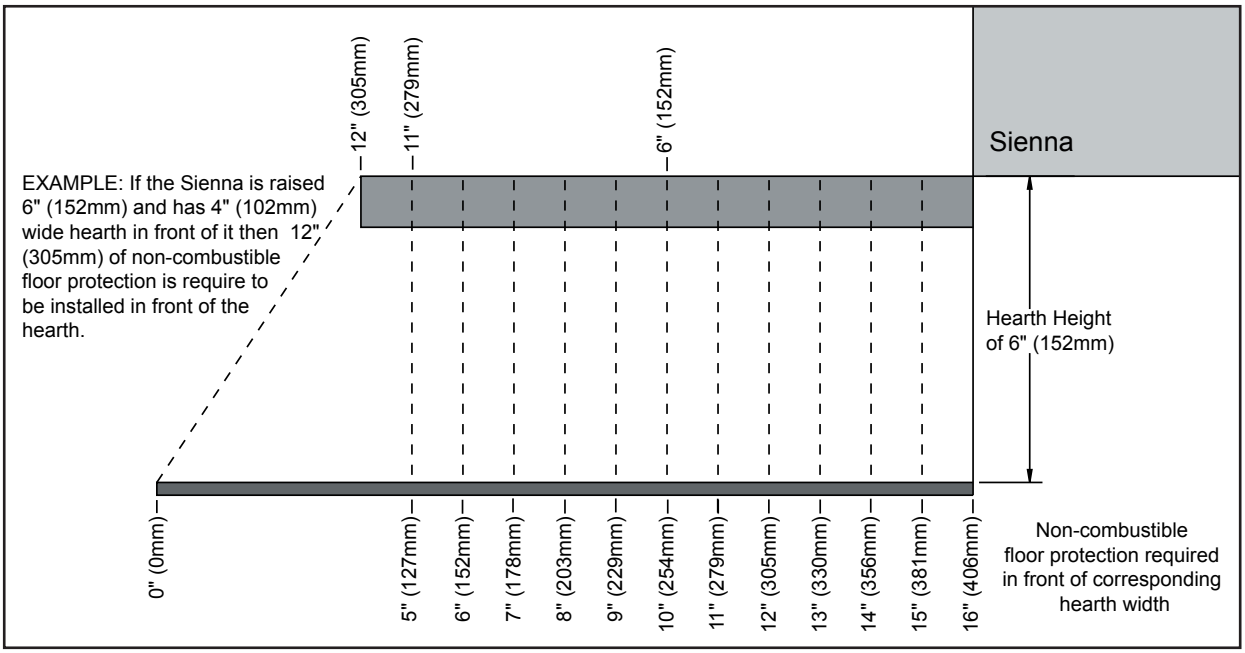

Figure 17: Floor protection distance required.

Initial Installation

WARNING: Operation of this heater when not connected to a properly installed and maintained venting system can result in carbon monoxide (CO) poisoning and possible death.

Minimum Fireplace Size:

Table 2: Minimum dimensions of fireplace for Sienna to be installed into.

Description of Fireplace Dimension		Direct Vent	B-Vent
Width	At Back	23 ¼" (591 mm)	23 ¼" (591 mm)
	At Front	35" (889 mm)	35" (889 mm)
Height	With Surround Only	23 ¾" (603 mm)	23 ¾" (603 mm)
	With Surround with Trim	23" (584 mm)	23" (584 mm)
Depth	With Surround Only	18" (457 mm)	19" (483 mm)
	With Surround with Trim	16 ½" (419 mm)	17 ½" (445 mm)
Chimney Flue Size		7" (178 mm) x 7" (178 mm)	5" (127 mm) x 5" (127 mm)

B-Vent Model:

WARNING: This appliance has been designed to operate by drawing combustion air and dilution air from the room. It is also designed to draw room air for proper heat circulation from the sides of the unit. Blocking or modifying the louvers in any way can create hazardous situations, either through poor venting or by overheating. It is important that this unit has sufficient air circulation for proper venting and combustion. Provisions must be made for the supply of adequate combustion and ventilation air. These openings must not be blocked. The appliance must not be connected to a chimney flue servicing a separate solid fuel-burning appliance.

Automatic Flue Gas Spill Switch - B-Vent Model Only:

NOTE: This heater must be properly connected to a venting system. This heater is equipped with a vent safety shutoff system designed to protect against improper venting of combustion products. This safety switch is located on the rear of the appliance. If the switch trips more than once, the venting should be inspected by a qualified service technician for possible blockage or severe down draft conditions.

The draft hood must be in the same pressure zone as the air inlet. Inspect for draft from the front of the unit at the ¼" tube shown in Figure 18. Check for a draft using smoke; a vacuum or suction into the tube will indicate proper drafting. If air is blowing out of the tube the problem must be corrected before the unit can be started.

This model can be vented with 4" aluminum or stainless steel flex vent and/or certified Type B Gas Vent. The flue collar of the appliance will fit inside of a standard 4" vent and may be fastened directly to the vent. Check periodically that the vent is unrestricted and an adequate draft is present when the unit is in operation.

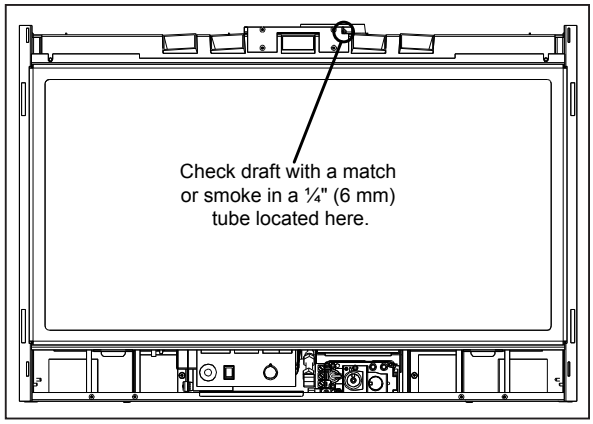

Figure 18: Draft check.

Initial Installation

QUALIFIED INSTALLERS ONLY

Direct Vent Model:

WARNING: This appliance has been designed to draw room air for proper heat circulation from the sides of the unit. Blocking or modifying the louvers in any way can create hazardous situations.

This model is vented with two (2) 3" aluminum or stainless steel flex vents leading into a co-linear to co-axial vent adaptor and using a vertical termination cap. The flue collars of this model will fit inside of a standard 3" vent and may be fastened directly to the vent. The Exhaust vent is on the right of the flue connector. The Air Intake is on the left side of the vent collar plate (this outlet is not in the center, it is off to one side of the vent collar plate.)

Check periodically that the vents are unrestricted. Also ensure that all direct vent pipes have been properly sealed and installed after routine inspection or cleaning. The air intake and exhaust pipes must be installed in the correct locations on the removable connector.

Preparing Your Sienna For Installation:

- Remove the packaging from the appliance and surround panels; check to make sure there is no damage. Carefully check the glass door. Do not use the unit if it is damaged. In the event damage is found, please report it to both the courier and your dealer as soon as possible.
- Carefully clean the fireplace and flue before installing the stove. Failure to do so may result in fumes or dirt being blown into the room and may cause a fire leading to death or serious injury.

1. Remove the unit from the box and remove all packaging material from the appliance.
2. Remove door. See Maintenance and Service - Glass Door Removal.
3. Remove log and ember set and all wrapping material from the stove. Remove wrapping material from log and embers and check for any damage. If damage is observed, do not use unit and contact your local dealer.
4. Remove the vent collar plate from the top of the stove by unscrewing the two (2) T-20 Torx screws located on the center top of the stove. Slide the collar plate backwards. If the fireplace that the unit is to be installed into is high, the collar plate does not need to be removed. Properly secure the vent collar plate to the flexible vent pipe liner(s) previously installed in the chimney. Be careful not to over-stretch the liner(s).
5. Place the unit part way into the fireplace. Connect the fireplace insert's flexible gas line to the household gas supply, using locally approved methods. Place the electric cable so it can be connected to the power supply.
6. As you push the unit into its final position in the fireplace, if the vent collar plate was removed, reinstall it to the stove by sliding it along the draft hood and secure with the screw.
7. Adjust the leveling legs to ensure the unit is level. There are two (2) leveling legs on each side (shown in Figure 19).

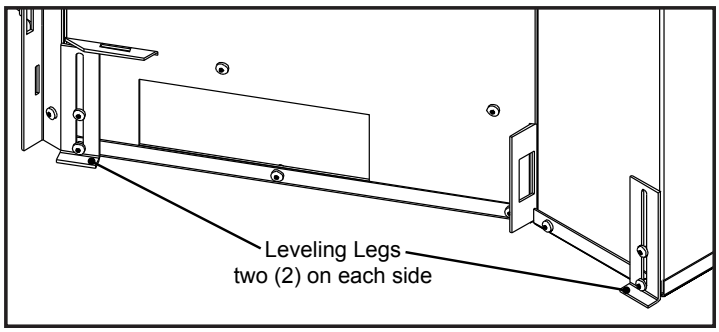

Figure 19: Leveling legs position.

Initial Installation

QUALIFIED INSTALLERS ONLY

Venting Fireplace Inserts:

The **ENVIRO** SIENNA may be installed and vented into any solid fuel fireplace that has been installed in accordance with the National, Provincial/State and local building codes and has been constructed of non-combustible materials. This appliance must not be connected to a chimney flue serving a separate solid fuel-burning appliance. Before starting refer to Initial Installation - Preparing Your Sienna For Installation and Initial Installation - Converting a Direct Vent Fireplace to a B-Vent Fireplace.

An approved chimney liner and rain cap must be used. A throat connector or flashing **must** be installed to ensure a tight seal, top performance, safety and efficiency. Carefully follow the manufacturer's instructions that accompany the chimney liner kit. Use listed B-Vent or Flexmaster double walled aluminum flex vent.

If necessary, remove the vent collar plate from the top of the insert and connect it securely to the liner with sheet metal screws and/or hose clamps. Check for any tears in the liner at this point. **IMPORTANT:** The screws that hold the vent collar plate in its approved position must be installed.

Provide for proper and adequate venting and air supply for this appliance in accordance with the tables in the current National Fuel Gas Code, Z223.1/NFPA 54 or the CSA B149.1.

The flow of combustion and ventilation air must not be obstructed.

Means for inspection of the vent connection to the appliance at the time of installation shall be provided.

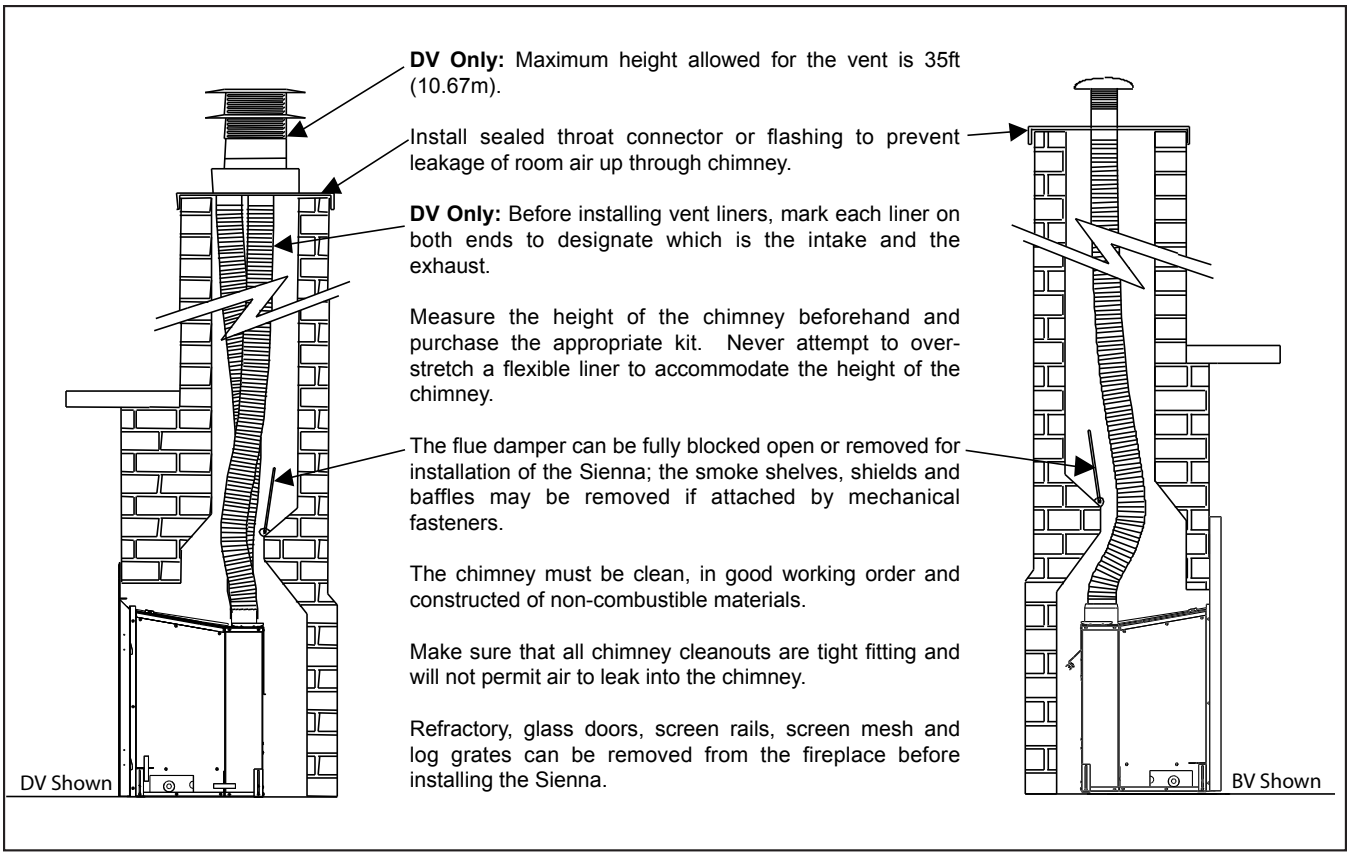

Figure 20: Installation of Sienna DV and BV.

Initial Installation

QUALIFIED INSTALLERS ONLY

Table 3: Vent termination clearances

Minimum Clearance	Description
3 ft (0.9 m)	Clearance above the highest point where it passes through a roof surface, refer to Figure 21.
24 in (0.6 m)	Clearance above a roof ridge, any other portion of a building, or any other obstruction within a horizontal distance of 10 feet (3 m), refer to Figure 21.
5 ft (1.5 m)	Clearance for a vent or chimney above either the highest connected appliance drafthood outlet, or flue collar.
6 ft (1.83 m)	Clearance to mechanical air supply inlet.
3ft (0.9m)	Clearance to each side of center line extended above meter/regulator assembly.
6 ft (1.83 m)	Radial clearance around service regulator vent outlet.
12 in (30 cm)	Clearance above grade, verandah, porch, deck, or balcony.
3 ft (0.9 m)	Clearance to a building opening or combustion air inlet of another appliance, except with the approval of the authority having jurisdiction for the following reduced clearances.
9 in (0.23 m)	Exception for inputs up to and including 50,000 Btu/h (15kW)
12 in (0.3 m)	Exception for inputs exceeding 50,000 Btu/h (15kW) but not exceeding 100,000 Btu/h (30kW)

NOTE: If the Sienna unit is pulled out of its installation, and the vent air intake system is disconnected for any reason, ensure that the vent-air intake pipes are re-sealed with high-temperature sealant or silicone and reconnected with three (3) sheet metal screws evenly spaced.

IMPORTANT: The Sienna is to be vented only with vertical venting – no horizontal.

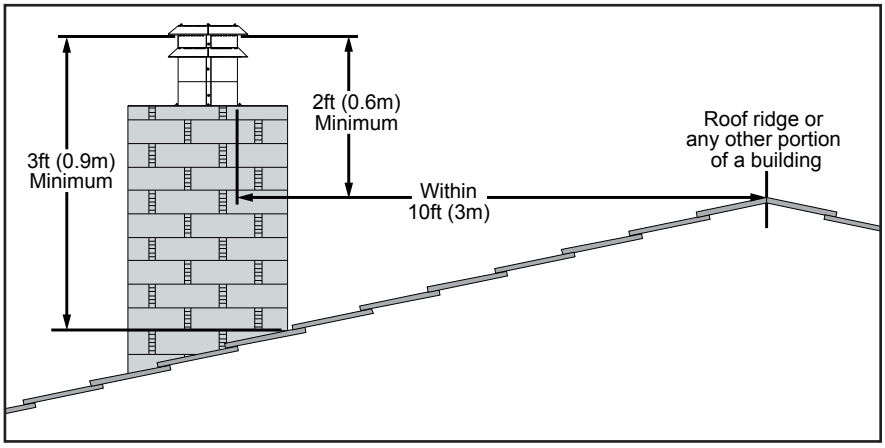

Figure 21: Roof Clearances.

ZERO CLEARANCE FIREPLACE INSTALLATION:

The metal floor of the ZC solid fuel firebox can be removed to allow the installation of the insert. THE CLEARANCE TO COMBUSTIBLE MATERIAL UNDER THE INSERT IS ½" (13mm). YOU MUST USE THE LEVELING LEGS TO RAISE THE INSERT A MINIMUM OF ½" (13mm) IF THE UNIT IS TO BE INSTALLED ON COMBUSTIBLE MATERIAL. The sidewalls and top structure of the solid fuel firebox cannot be altered with the exception of removable dampers and baffles. THE ORIGINAL FIREPLACE MAY NEVER BE RETURNED TO SOLID FUEL USE IN THIS CONDITION.

IMPORTANT: If the factory-built fireplace has no gas access hole(s) provided, an access hole of 1.5 inch (37.5 mm) or less may be drilled through the lower sides or bottom of the firebox in a proper workmanship like manner. This access hole must be plugged with non-combustible insulation after the gas supply line has been installed. Cutting any sheet-metal parts of the fireplace, in which the gas fireplace insert is to be installed, except as tested for the floor is prohibited.

Initial Installation

QUALIFIED INSTALLERS ONLY

Electrical Requirements:

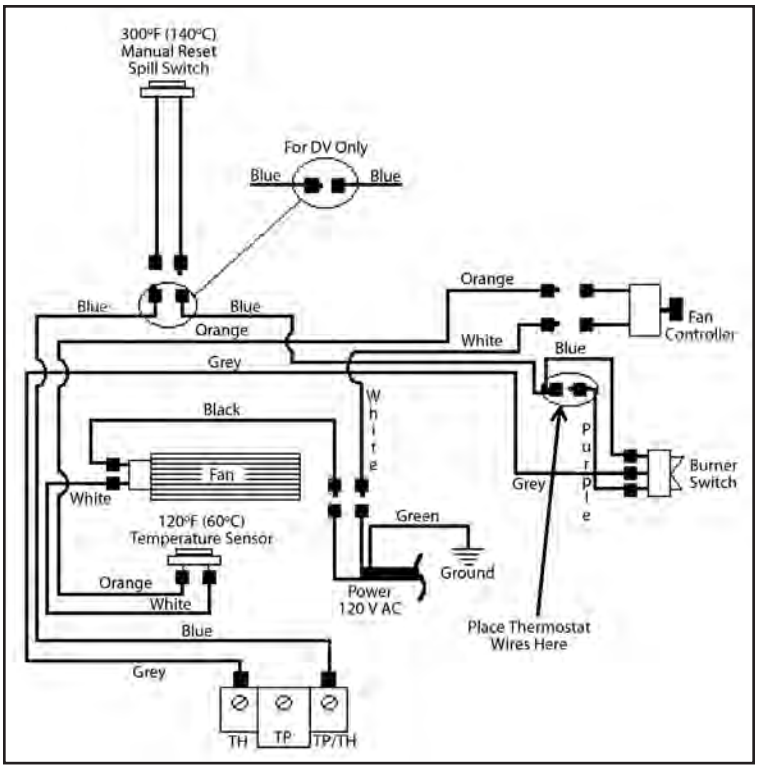

Figure 22: Fan wiring diagram.

The fan is thermostatically controlled and it will not operate if the appliance is cold. A few minutes after the appliance is lit and the variable speed control is set at a desired setting, the fan will automatically turn on. The fan will automatically turn off after the appliance has cooled down.

The fireplace must be electrically grounded in accordance with local codes or, in the absence of local codes, with the current Canadian Electrical Code CSA C22.1, or The National Electrical Code ANSI / NFPA 70 in the US. This appliance must be connected to a line-voltage electrical supply.

WARNING: The electrical grounding instructions must be followed. The fan kit is equipped with a three-prong (grounding) plug for your protection against shock hazard, and should be plugged directly into a properly grounded three-prong outlet. DO NOT cut or remove the grounding prong from this plug.

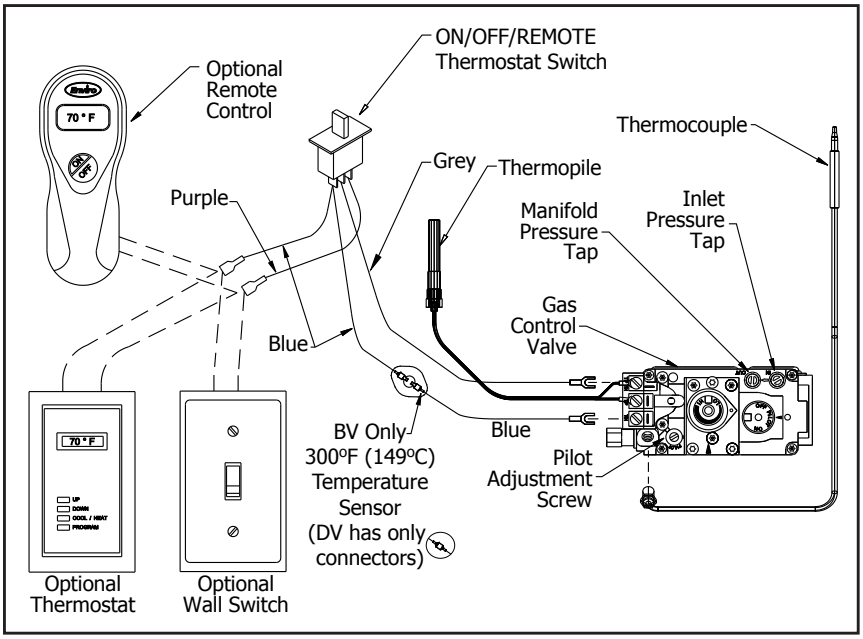

Figure 23: Wiring of a valve and thermostat.

CAUTION: Label all wires prior to disconnecting when servicing controls. Wiring errors can cause improper and dangerous operation. Verify proper operation after servicing.

Table 4. Recommended Thermostat Wire Size.

Wire Size	Max. Length
14 gauge	100 ft (30.48 m)
16 gauge	60 ft (18.29 m)
18 gauge	40 ft (12.00 m)
20 gauge	25 ft (7.62 m)
22 gauge	18 ft (5.49 m)

Initial Installation

QUALIFIED INSTALLERS ONLY

Gas Line Connection:

Warning: Only persons licensed to work with gas piping may make the necessary gas connections to this appliance.

Gas Line Connection:

•This fireplace is equipped with a certified flexible pipe located on the right side of the unit, terminating in a ⅜" male NPT fitting. Consult the local authorities for local codes or use the CAN/CGA B149 (1 or 2) installation code in Canada. In the US, gas installations follow either local codes or the current edition of the National Fuel Gas Code ANSI Z223.1.

•The efficiency of this unit is a product thermal efficiency rating determined under continuous operating conditions and was determined independently of any installed system.

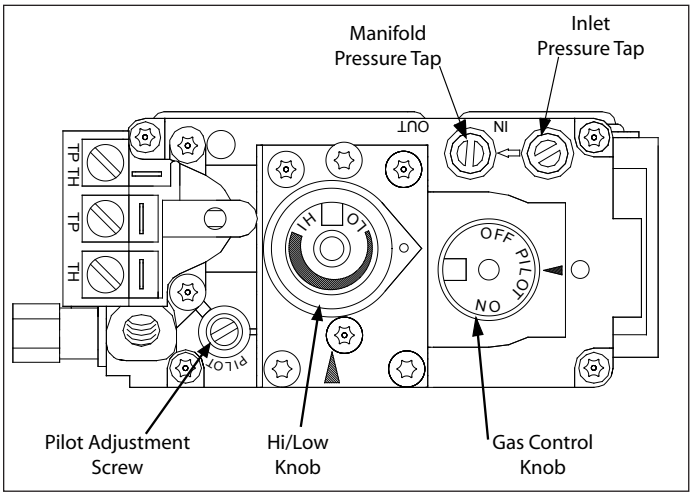

Figure 24: Fully labeled gas valve.

The appliance and its appliance main gas valve must be disconnected from the gas supply piping system during any pressure testing of that system at test pressures **in excess** of ½ psi (3.5 kPa). The appliance must be isolated from the gas supply piping system by closing its equipment shutoff valve during any pressure testing of the gas supply piping system at test pressures equal to or less than ½ psi (3.5 kPa).

The unit must be isolated from the gas supply piping system by closing its individual manual shut off valve during any pressure testing of the gas supply piping system at pressures **equal to or less than** ½ psig (3.45 KPa).

Always check for gas leaks with a soap and water solution after completing the required pressure test.

TO TEST VALVE PRESSURES:
The pressure taps are located on the top right of the valve (see Figure 24).

- Turn set screw one (1) turn counter-clockwise to loosen.
- Place 5/16 in (8 mm) I.D. hose over the pressure taps.
- Check pressures using a manometer.
- When finished, release pressure, remove hose and tighten set screw.

Table 5: Orifice and Pressure Information.

Main Burner	Natural Gas	Propane Gas
Orifice:	#32 DMS	#49 DMS
Venturi Setting:	½" Min.	⅞" Min.
Manifold Press:	3.8 W.C. (0.95 KPa)	11.0 W.C. (2.74 KPa)
Min. Manifold Press:	1.2 W.C. (0.30 KPa)	2.7 W.C. (0.67 KPa)
Max. Supply Press:	7.0 W.C. (1.74 KPa)	13.0 W.C. (3.28 KPa)
Min. Supply Press:	5.0 W.C. (1.24 KPa)	12.0 W.C. (2.98 KPa)
Max. Input:	41,000 BTU/hr (12.0 KW)	41,000 BTU/hr (12.0 KW)
Min. Input:	23,000 BTU/hr (6.7 KW)	21,000 BTU/hr (6.1 KW)

NEVER USE AN OPEN FLAME FOR LEAK TESTING.

Initial Installation

QUALIFIED INSTALLERS ONLY

Converting A Direct Vent Fireplace To A B-Vent Fireplace:

1. Remove the Direct Vent chimney connector assembly by taking out the two (2) T-20 screws at the front of the unit. Push the assembly out from under the brackets at the back and remove (see Figure 24).
2. Remove the two (2) fresh air inlet covers from each side. Cover locations shown in Figure 25.
3. Slide the B-Vent chimney connector assembly into the same position the Direct Vent chimney connector assembly was in. Ensure the tabs are under the brackets at the back and the holes at the front line up. Secure into place with the two (2) T-20 screws at the front of the unit.
4. Disconnect the two (2) blue wires at the opening to the right of the unit and connect them to the 300°F (149°C) manual reset spill switch at the rear of the B-Vent chimney connector with the wires supplied. Refer to Figure 26.
5. Test fire the appliance and ensure proper operation. A venturi adjustment could be required to achieve an efficient flame. Improper operation or adjustment could result in Carbon Monoxide production causing personal injury or property damage.

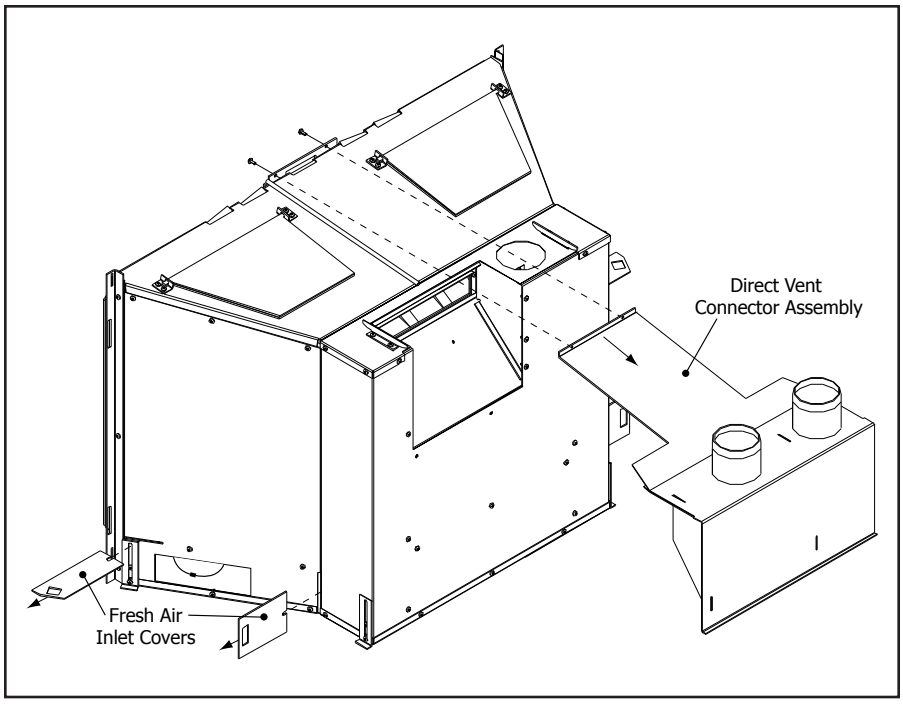

Figure 25: Converting to a BV fireplace.

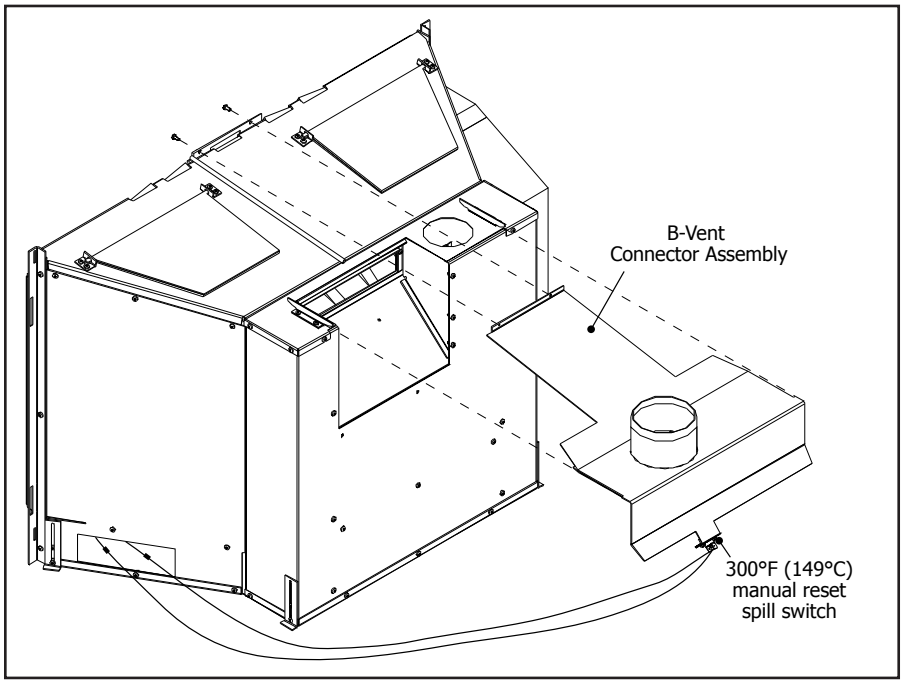

Figure 26: Converting to a BV fireplace.

Secondary Installation

Installation of Surround Panel:

The Sienna must have one of the panels installed around the unit; the unit panel, the filler panel, or the filler panel with trim. If you have trim for your filler panel, the trim must be installed before installing the filler panel onto the unit. Only trim kits, surround panels, and faces supplied by the manufacturer shall be used in the installation of this appliance. Draft Relief Openings must not be covered or blocked. The flow of combustion and ventilation air must not be obstructed.

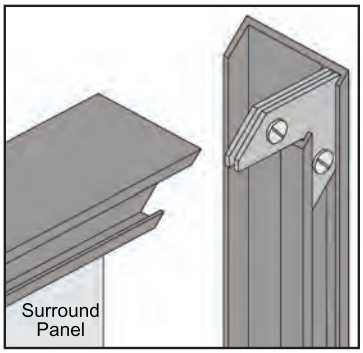

Figure 27: Corner brackets for trim.

1. Attach one side trim to the top trim using a corner bracket (see Figure 27) to secure pieces together. There are two (2) main pieces to each corner bracket (see Figure 28). Install these corner pieces into the trim with the "B FACE" sides facing each other & the screw heads facing outward. Align the side and top trim tightly together and with a flat head screwdriver tighten the screw in each corner bracket in the side trims, then tighten the top trim.

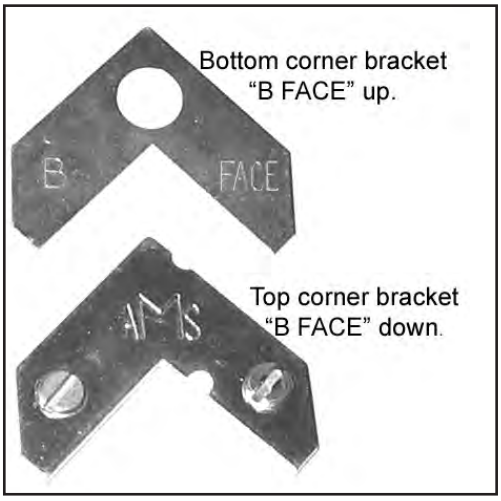

Figure 28: Two pieces of corner bracket.

2. Slide the two (2) attached trim pieces onto the surround panel.
3. Attach the other side trim piece to the top trim using the same method used in Step 1.
4. Place the second side of the trim on the surround panel in the same manner use on the first side and secure in the same manner.
5. On the side trims there are holes 2" (50 mm) from either end. Using a Phillips screwdriver, place a #8 screw 1¼" long in each hole and tighten (refer to Figure 29). This will keep the trim tight against the surround.

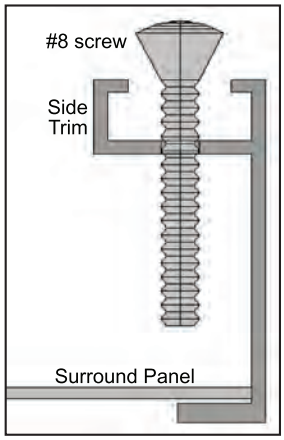

Figure 29: Screw to hold the trim against the surround.

NOTE: The notch at the bottom of the left trim is so the power cord can be run to the outside of the panel.

INSTALLATION: Lift the surround upright in front of the fireplace with the four (4) hooks pointing towards the fireplace. Slide the hooks into their corresponding slots (see Figure 30). Ensure the hooks are pushed all the way into the slots and the notch on the hook must be on the bottom of the slot. The surround should be wiped with a damp cloth periodically.

REMOVAL: Lift the surround straight up in order to unhook the notch on the hooks from the bottom of the slots. Pull the surround out away from the fireplace. Place the surround where it will not be damaged.

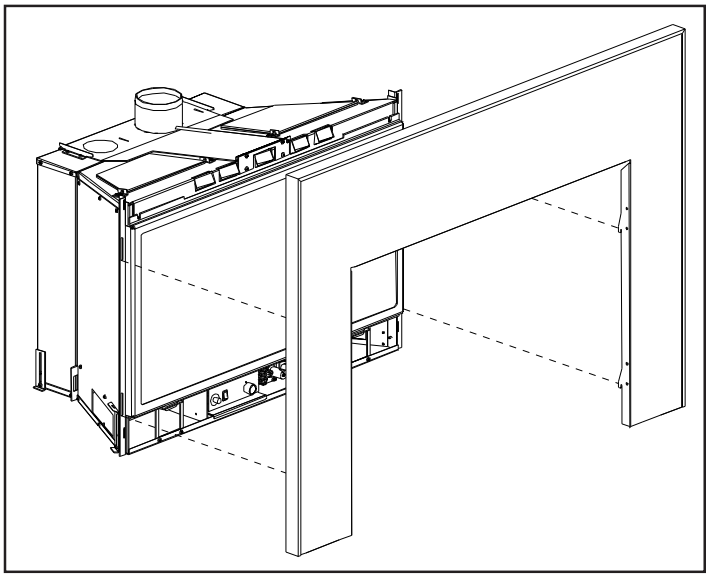

Figure 30: Filler panel with trim installation.

Secondary Installation

Log Set and Ember Installation:

NOTE: The logs are fragile and should be handled gently.

The placement of the logs is not arbitrary. If they are positioned incorrectly, the flames can be "pinched" and will not burn correctly. The burner, and a few of the logs come with locator pins, notches and ledges, which make alignment easier. Using the pictures provided, carefully set the logs in place (see Figures 31 through 36).

Figure 31: The first log to be placed is the **back log**. It leans on the back of the firebox, push it back as far as you can.



Figure 31: Empty firebox with grate and locator pins.

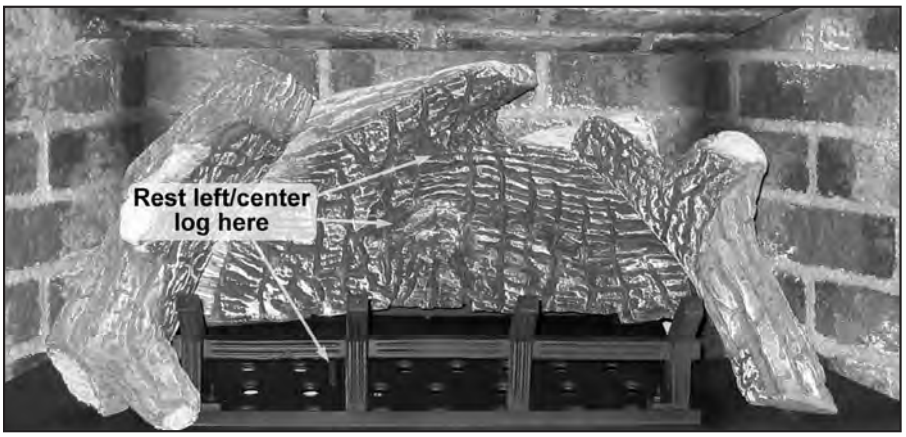

Figure 32. First Stage Log Set Installation.

Figure 32: The **left log** and the **right log** both have two (2) holes in them that will rest over their corresponding two (2) locator pins pointed out in Figure 31.



Figure 33. Second Stage Log Set Installation.

Figure 33: The bottom of the **left/center log** will rest over the locator pin on the burner and against the grate. The top half of the log must rest against the back log, see Figure 32. The center spot shown in Figure 32 is a knot in the back log for the left/center log to rest against. Ensure the log does not block any burn ports.

Figure 34: The front end of the **right/center log** has a notch in it that is to rest around the right/center post of the grate. The back end of the log rests on the burner tray (see Figure 33). Ensure the log does not block any burn ports.



Figure 34. Third Stage Log Set Installation.



Figure 35. Fourth Stage Log Set Installation.



Figure 36. Fifth Stage Log Set Installation.

Figure 35: Once the logs are in position the provided rock wool can be placed irregularly in front of the burner.

Figure 36: Place the embers irregularly onto and around the front of the burner to create a realistic look. The ceramic fiber comes in chunks that can be ripped into smaller pieces.

WARNINGS: DO NOT pack this ember material as this could create an unsafe condition. The pieces should be lightly placed so they don't block any of the burner ports.

DO NOT allow any of the embers to rest against the pilot assembly.

Caution: Use only the type of ember material supplied with this fireplace. Due to the irregular size of the ember material, there may be more than required. Use of other foreign materials on the burners may create dangerous conditions.

Secondary Installation



Figure 37. Sienna complete log set-up with embers burning.

NOTE: While the glass is still removed, it is recommended that the gas line be purged by lighting the pilot.

Re-install the glas door. **Never operate the fireplace with the glass door removed.**

When lighting the fireplace for the first time since the log set and embers have been installed/replaced, watch for ignition at ALL the burner ports. If a long delay is noticed, turn the appliance off and wait for it to cool down. Remove the glass and rearrange the ember material, making sure none of the burner ports air holes are blocked.

Secondary Installation

Removing The Brick Panel:

The brick panel set is fragile, handle with extreme care.

The brick panel set comes pre-installed. The centre and top panel are the only panels that need to be removed if the complete gas and electrical tray assembly must be removed. The side panels may remain installed unless they are to be replaced.

1. Turn the unit off and allow the unit to cool completely.
2. Remove the fascia or louvers, open the door, and remove the log set.
3. Pull out the bottom of the centre panel while pushing up on the top panel.
4. With the center panel out, the top panel will easily come out. Just slide the top edge back out of the top lip in the firebox.

If the side and front panels must be removed, continue with steps 5, 6, 7, and 8.

5. Lift the front panel, located on the firebox bottom, from one end and remove the panel at an angle through the fire box opening.
6. Remove the log support tray by lifting the back of the tray up and pull it out from under the lip. Take care not to knock the pilot and the side brick panels.
7. Remove the two (2) T-20 screws holding the bottom of the baffle (shown in Figure 39).
8. Pull the panels out of the lips at the front of the firebox and carefully remove the panel from the unit (shown in Figure 40).

To re-install, follow the above steps in reverse. Ensure that the front and side panels are pushed as far forward as they can be before continuing with the installation.

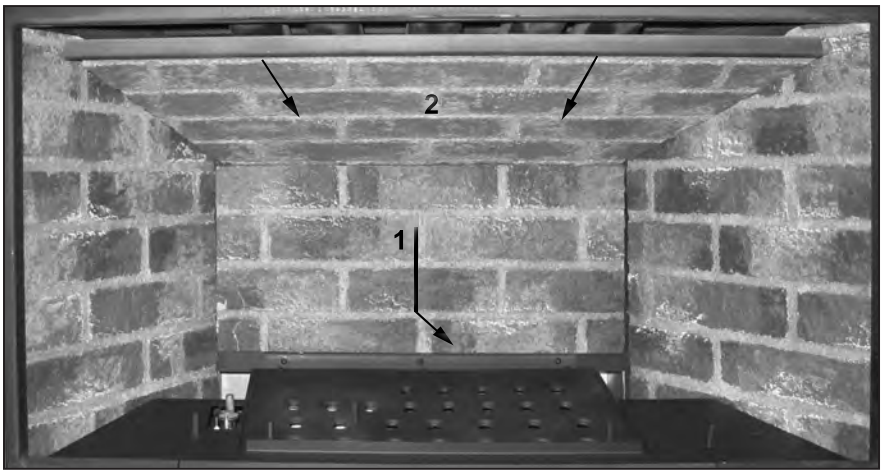

Figure 38: Brick Panel Installation.

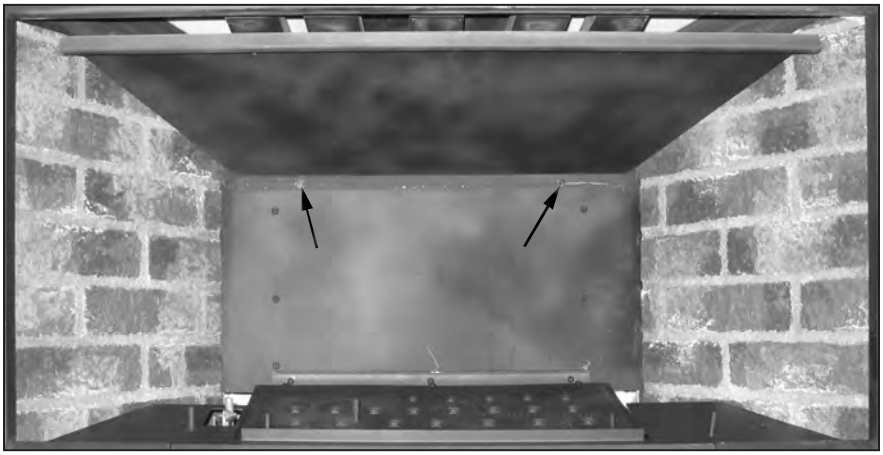

Figure 39: Brick Panel Installation.

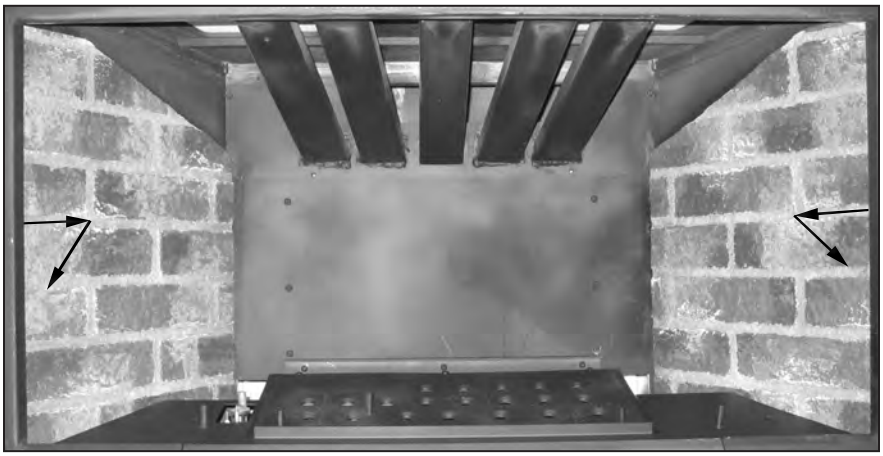

Figure 40: Brick Panel Installation.

Trouble Shooting

Problem	Possible Cause	Solution
The main burner does not ignite when called for.	The gas valve may not be on.	• Check that the gas control knob is in the "ON" position.
	Thermostat is not calling for heat.	• Adjust the thermostat several degrees above ambient temperature.
	Problem with gas valve.	• Use a DC voltmeter to measure the voltage across the TPTH and TP terminals. Main operator voltage: Open circuit ≥ 325mV & Closed circuit ≥ 100mV. • If voltage is not present, check the control circuit for proper operation. • If proper control system voltage is present, replace the gas control.
Spark will not light the pilot after repeatedly pressing the spark ignitor.	Defective piezo ignitor.	• Check connections to ignitor. • If ignitor connections are good but no spark, replace ignitor.
	Broken spark electrode.	• Check for broken ceramic insulation, replace electrode if broken.
	Misaligned spark electrode.	• If spark is not arcing from electrode to pilot, loosen the screws on the pilot base, adjust, and tighten.
Pilot will not remain lit.	Problem with thermocouple circuit.	• Check for proper connection of the thermocouple to the rear of the valve. If loose, fully tighten. • Check pilot for full flame impingement around thermocouple. If flame is too small, check gas pressure, adjust pilot rate screw, check pilot head for damage. • Check thermocouple voltage at valve. It must be greater than 5 mV. If low, replace thermocouple.
	Air in gas line (pilot dies while knob is depressed).	• Bleed line. • Check gas line pressure. • Contact dealer.
Burners will not remain lit.	Problem with thermopile circuit.	• Check gas line pressure. • Check for flame impingement on thermopile. If low, see "Pilot will not remain lit". • Check thermopile for minimum of 300 mV when burner is switched on. • Check wiring to thermostat for breaks. **BV ONLY:** Check for spillage at draft hood that may trip spill switch.
Flame lifting.	Leak in vent pipe.	• Check for leaks in vent connections.
	Improper vent configuration.	• Check vent configuration with manual.
	Terminal may be recirculating flue gases.	• Check to see if terminal is on correctly. • May need to install high wind termination cap. • Contact dealer.
Glass fogs up.	Normal Condition: after the appliance warms up the glass will clear. **Due to additives in gas, glass may get hazy during operation.** Clean as needed.	
Blue Flames.	Normal during start up: flames will yellow as the fireplace heats up.	
Flames are burning "dirty" or sooting.	Flame impingement.	• Check log positioning. • Increase primary air by opening the venturi shutter and/or by opening the vent restrictor. See also "Burners will not remain lit."
Remote control doesn't work.	Problem with the remote.	• One or more of the batteries are dead. See remote control instructions.
	Problem with fireplace.	• The on/off switch is turned to OFF. • The gas control valve is turned to PILOT or OFF. • The pilot has gone out.
BV ONLY: Insufficient air for combustion.	• Air tight house. • A vacuum in room due to another air-moving device.	• Supply make up air to the unit.

Parts List- Unit Components

Replacement parts must be purchased from an ENVIRO dealer.

Reference #	Part Description	Part #
1	120°F Ceramic Fan Temperature Sensor	EC-001
2	300°F (149°C) Manual Reset Spill Switch (Normally Closed)	EC-003
3	S.I.T. Nova Valve Convertible	50-1421
4	Thermocouple	EC-009
4	Spark Electrode with Ignitor Cable	EC-011
4	Thermopile	EC-012
4	Pilot Orifice NG Threaded	EC-019
4	Pilot Orifice LP Threaded	EC-020
5	Pilot Gasket	EC-021
6	S.I.T. Piezo Ignitor	EC-023
7	Burner Switch	EC-026
8	Fan Controller - 115V	EC-039
9	Domestic Power Cord - 115V	EC-042
10	Convection Blower - 115V	EC-069
	SIT Pilot ⅛” Tube with End Furrels (1 piece)	30-043
11	Blank Orifice #73	50-343
	Embers	50-491
	On/Off Remote Control Kit	50-559
	Programmable Wall Mounted Remote Control	50-583
12	Dual Bulb Door Gasket (10 feet)	50-634
13	Grate	50-916
14	Three Flame Pilot Hood	50-925
15	Burner	50-1089
16	DV Flue Connector	50-1090
17	Relief Door Gasket	50-1091
18	Brick Panels (set of 4)	50-1092
19	Log Support	50-1093
	Sienna Owner’s Manual	50-1096
20	Door, Glass, & Gasket	50-1112
21	Log Set with Embers	50-1114
22	Burner Tray Complete	50-1115
23	Air Intake Covers	50-1116
24	BV Vent Connector	50-1117
	Conversion Kit from LP to NG Convertible	50-1440
	Conversion Kit from NG to LP Convertible	50-1441
	S.I.T. Valve Conversion Screw W/oring	50-1450
	S.I.T. Valve Conversion Screw Cap	50-1451
	Pan Burner Only	50-1459
	Control Panel Decal	50-1539

Parts Diagram - Components

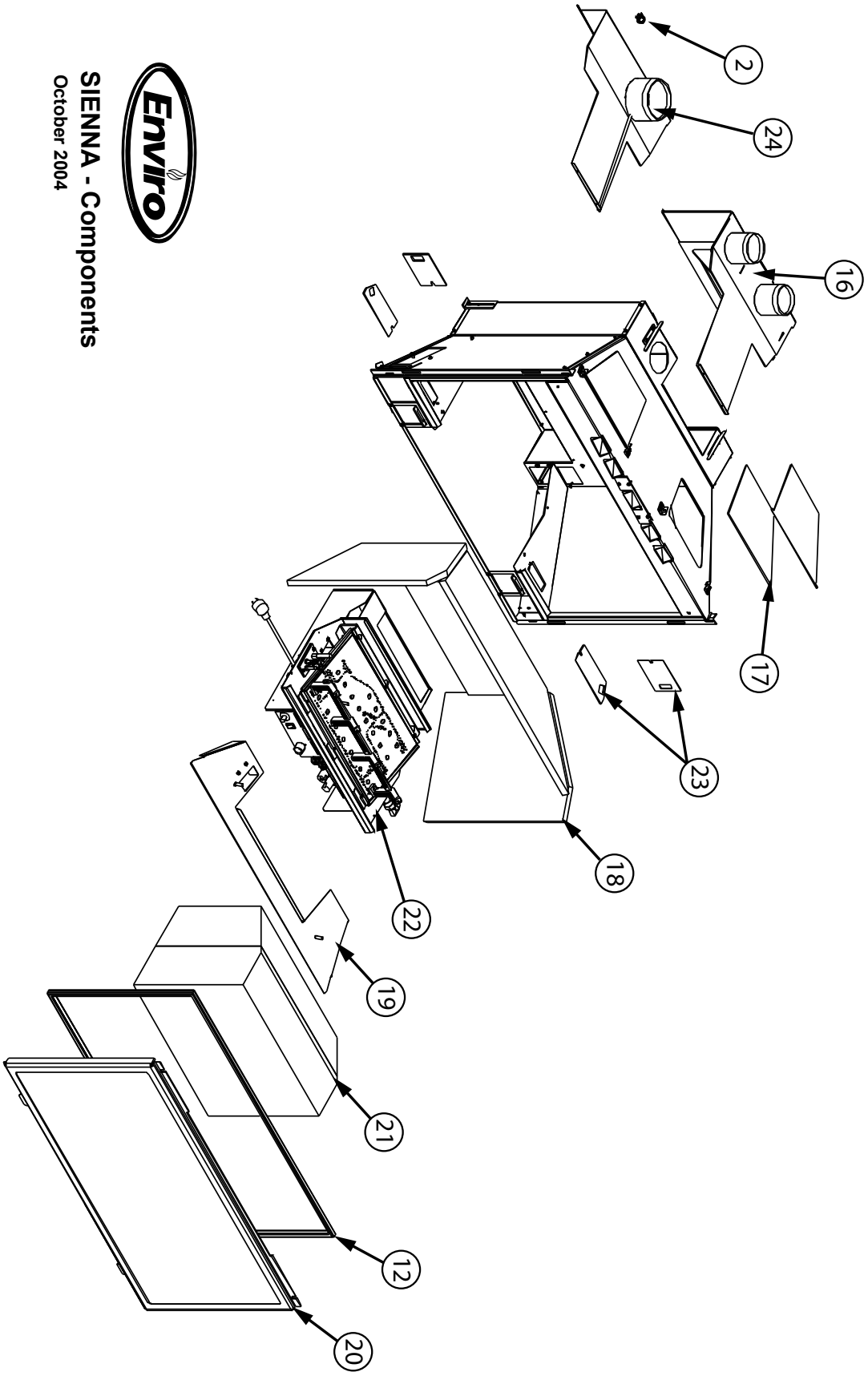

Parts Diagram - Burner

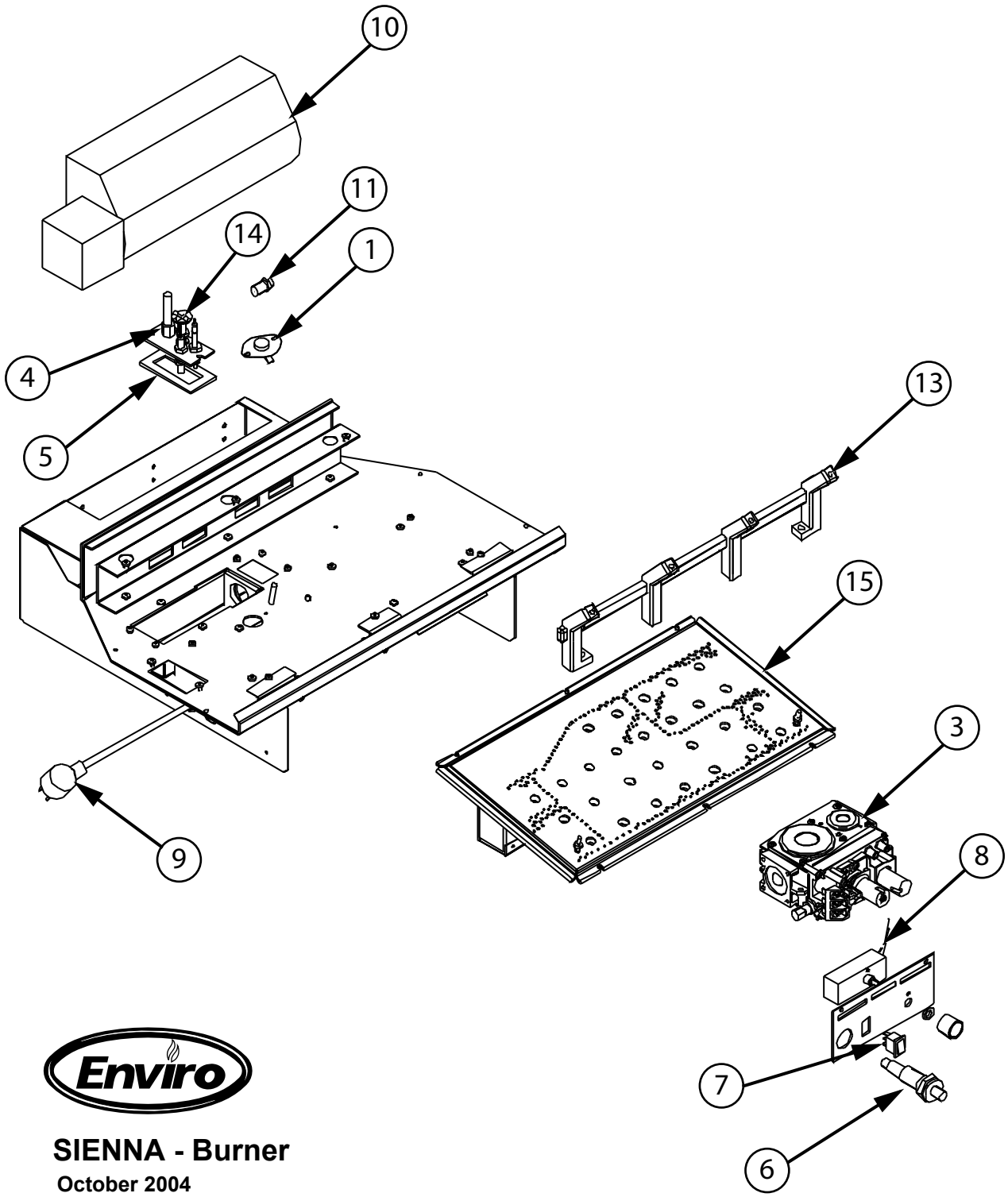

SIENNA - Burner

October 2004

Parts List - Options

Reference Number	Option Description	Part Number
1A	The Cottage Trim Kit - Gold	50-548
1A	The Cottage Trim Kit - Pewter	50-549
1A	The Cottage Trim Kit - Antique Copper	50-550
1A	The Cottage Trim Kit - Painted Black	50-694
2A	Cape Cod Doors	50-1097
3A	Unit Panel & Keystone	50-1108
4A	Cottage	50-1109
5A	Filler Panel	50-1110
6A	Louvers (set of 2)	50-1111
7A	Panel Trim Set 46” x 30” (117cm x 76cm) - Black	50-1113

Parts Diagram - Options

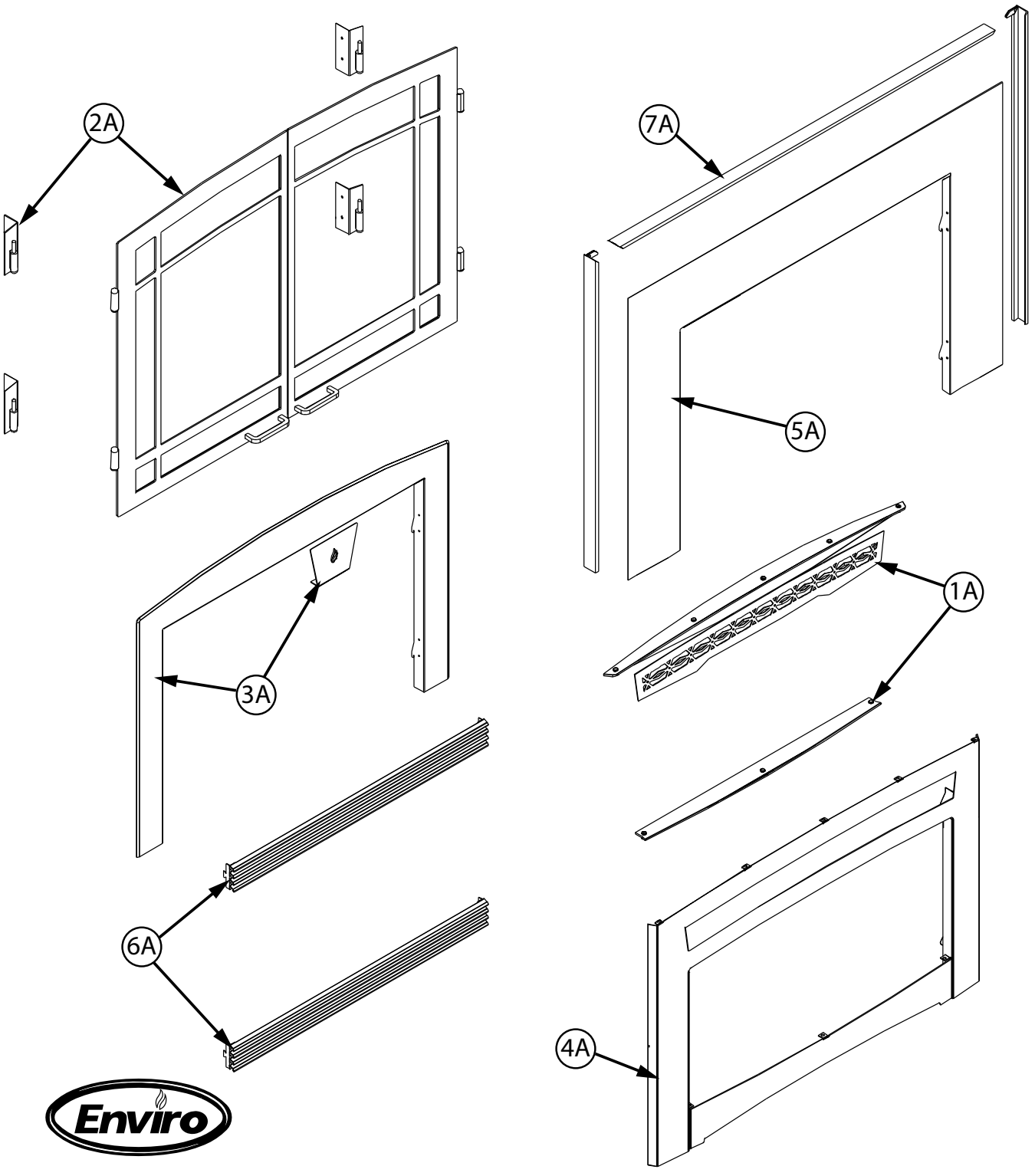

SIENNA - Options

October 2004

Warranty

Sherwood Industries Ltd. is the manufacturer of the Enviro line of heating products. At Sherwood Industries, our commitment to the highest level of quality and customer service is the most important thing we do. Each Enviro stove is built on a tradition of using only the finest materials and is backed by our Exclusive Lifetime Limited Warranty to the original purchaser. With Enviro, you're not just buying a fireplace or stove, you're buying a company with years of unequalled performance and quality.

Limited Lifetime Warranty:
Under this warranty, Sherwood Industries Ltd. covers the fireplace or stove body and accessories against defects in materials and workmanship, for part repair or replacement for the first seven (7) years and limited labour for the first two (2) years to the original purchaser. This Warranty covers: Firebox, Heat Exchanger, Steel Firebox Panels, Ceramic Logs & Panels, Burner, Ceramic Glass, Pedestals, Panels and Legs. Please see the exclusions and limitation section below as certain restrictions and exclusions apply to this warranty.

Limited Two (2) Year Warranty:
Under this warranty, Sherwood Industries Ltd. covers: Gas Assembly, Blower, Blower Control, Temperature Sensors and Wire Harness against defects in materials and workmanship, for part repair or replacement for the first two (2) years and limited labour for the first two (2) years to the original purchaser. Please see the exclusions and limitation section below as certain restrictions and exclusions apply to this warranty.

Limited One (1) Year Warranty:
Under this warranty, Sherwood Industries Ltd. covers all exterior surface finishes against defects in materials and workmanship, for part repair or replacement and limited labour for the first (1) year to the original purchaser. Please see the exclusions and limitations section below as certain restrictions and exclusions apply to this warranty.
Here is how our Warranty works:
If you have any concerns with your Enviro product, please contact the dealer where you purchased the fireplace or stove. Your dealer shall make all claims under this warranty in writing.

To the Dealer
When filling out a warranty claim, please complete the following information on an official warranty claim form:
Customer information: Name, address and telephone number of purchaser and date of purchase.
Dealer information: Date of installation, name of installer and dealer, serial number of the appliance, nature of complaint, defects or malfunction, description and part numbers of any parts replaced.

To the Distributor
Sign and verify that work and information are correct.

Exclusions and Limitations:
1. This Warranty does not cover tarnish, discoloration or wear on the plating or paint.
2. This Warranty excludes wear and tear or breakage caused by cleaning, moving or service on log set and panels.
3. A qualified installer must install this stove or fireplace. This Limited Warranty covers defects in materials and workmanship only if the product has been installed in accordance with local building and fire codes; in their absence, refer to the owner's manual. If the product is damaged or broken as a result of any alteration, willful abuse, mishandling, accident, neglect, or misuse of the product, the Limited Warranty does not apply.

Warranty

4. The stove must be operated and maintained at all times in accordance with the instructions in the Owner's Manual. If the unit shows signs of neglect or misuse, it is not covered under the terms of this Warranty policy. Performance problems due to operator error will not be covered by the Limited Warranty policy.
5. As this is a heating appliance, some changes in colour of surface finishes may occur. This is not a flaw and as such is not covered under this warranty.
6. Some minor expansion, contraction, or movement of certain parts and resulting noise, is normal and not a defect and, therefore, is not covered under this Limited Warranty.
7. Misuse includes over-firing. Over-firing this appliance can cause serious damage and will nullify the Limited Warranty.
8. The Limited Warranty will cover glass thermal breakage only and will not cover misuse of the stove glass, including but not limited to glass that is struck, has surface contaminates or has had harsh or abrasive cleaners used on it.
9. This warranty does not cover products made or provided by other manufacturers and used in conjunction with the operation of this stove without prior authorization from Sherwood Industries Ltd. The use of such products may nullify the Limited Warranty on this stove. If unsure as to the extent of this Limited Warranty, contact your authorized Enviro dealer before installation.
10. Sherwood Industries Ltd. will not be responsible for inadequate performance caused by environmental conditions.
11. The Limited Warranty does not cover installation and operational related problems such as use of downdrafts or spillage caused by environmental conditions. Environmental conditions include but are not limited to nearby trees, buildings, roof tops, wind, hills, mountains, inadequate venting or ventilation, excessive offsets, negative air pressures or other influences caused by mechanical systems such as furnaces, fans, clothes dryers etc.
12. The Limited Warranty is void if:
    a) The stove has been operated in atmospheres contaminated by chlorine, fluorine or other damaging chemicals.
    b) The stove is subject to submersion in water or prolonged periods of dampness or condensation.
    c) Any damage to the unit, combustion chamber or other components due to water, or weather damage which is the result of, but not limited to, improper chimney/venting installation.
    c) Salt air in coastal areas or high humidity can be corrosive to the finish; these environments can cause rusting. Damage caused by salt air or high humidity is not covered by the Limited Warranty.
13. Exclusions to the Limited Warranty include: injury, loss of use, damage, failure to function due to accident, negligence, misuse, improper installation, alteration or adjustment of the manufacturer's settings of components, lack of proper and regular maintenance, alteration, or act of God.
14. The Limited Warranty does not cover damage caused to the fireplace or stove while in transit. If this occurs, do not operate the stove and contact your courier and/or dealer.
15. Limited Warranty does not extend to or include firebox paint, door or glass gaskets with damage caused by normal wear and tear, or exterior paint discoloration or chipping, worn gaskets, etc.
16. The Limited Warranty does not include damage to the unit caused by abuse, improper installation, or modification of the unit.
17. Damage to plated surfaces caused by fingerprints, scratches, melted items, or other external scores and residues left on the plated surfaces from the use of abrasive cleaners or polishes is not covered in this warranty.
18. The Limited Warranty does not cover tarnish, discoloration or wear on the plated surfaces.

19. The paint on the Metal Brick Liner may peel. This is due to the extreme conditions applied to the paint during normal usage. It is not a flaw and is not covered under warranty.
20. Sherwood Industries Ltd. is free of liability for any damages caused by the fireplace or stove, as well as inconvenience expenses and materials. The Limited Warranty does not cover incidental or consequential damages.
21. The Limited Warranty does not cover any loss or damage incurred by the use or removal of any component or apparatus to or from the Enviro fireplace or stove without the express written permission of Sherwood Industries Ltd. and bearing a Sherwood Industries Ltd. label of approval.
22. Any statement or representation of Enviro products and their performance contained in Enviro advertising, packaging literature, or printed material is not part of the Limited Warranty.
23. The Limited Warranty is automatically voided if the fireplace or stove's serial number has been removed or altered in any way. If the stove is used for commercial purposes, it is excluded from the Limited Warranty.
24. No dealer, distributor, or similar person has the authority to represent or warrant Enviro products beyond the terms contained within the Limited Warranty. Sherwood Industries Ltd. assumes no liability for such warranties or representations.
25. Sherwood Industries Ltd. will not cover the cost of the removal or re-installation of the stove, hearth, facing, mantels, venting or other components.
26. Labour to replace or repair items under this Limited Warranty will be covered per our warranty service fee reimbursement schedule. Labour rates are set per component and as such total labour costs may not be covered.
27. Sherwood Industries Ltd. is not liable for freight or labour on any stove replaced in-field and is not liable for travel costs for service work. In the event of in-home repair work, the customer will pay any in-home travel fees or service charges required by the Authorized Dealer.
28. At no time will Sherwood Industries Ltd. be liable for any consequential damages which exceed the purchase price of the unit. Sherwood Industries Ltd. has no obligation to enhance or modify any stove once manufactured (example: as a stove evolves, field modifications or upgrades will not be performed).
29. This Limited Warranty is applicable only to the original purchaser and it is non-transferable.
30. This warranty only covers Enviro products that are purchased through an authorized Enviro dealer.
31. If for any reason any section of the Limited Warranty is declared invalid, the balance of the warranty remains in effect and all other clauses shall remain in effect.
32. The Limited Warranty is the only warranty supplied by Sherwood Industries Ltd., the manufacturer of the stove. All other warranties, whether express or implied, are hereby expressly disclaimed and purchaser's recourse is expressly limited to the Limited Warranty.
33. Sherwood Industries Ltd. and its employees or representatives will not assume any damages, either directly or indirectly, caused by improper usage, operation, installation, servicing or maintenance of this stove.
34. Sherwood Industries Ltd. reserves the right to make changes without notice. Please complete and mail the warranty registration card and have the installer fill in the installation data sheet in the back of the manual for warranty and future reference.
35. Sherwood Industries Ltd. is responsible for stocking parts for a maximum of seven (7) years after discontinuing the manufacture or incorporation of the item into its products. An exception to this would be if an OEM supplier is not able to supply a part.

Installation Data Sheet

The following information must be recorded by the installer for warranty purposes and future reference.

NAME OF OWNER:

_____

ADDRESS:

_____

_____

_____

PHONE:_____

NAME OF DEALER:

_____

ADDRESS:

_____

_____

_____

PHONE:_____

MODEL:_____

SERIAL NUMBER:_____

DATE OF PURCHASE: _____ (dd/mm/yyyy)

DATE OF INSTALLATION:_____(dd/mm/yyyy)

☐ DIRECT VENT ☐ B-VENT

☐ NATURAL GAS (NAT) ☐ PROPANE(LPG)

INLET GAS PRESSURE:_____in wc

MAIN BURNER ORIFICE:_____# DMS

PILOT ORIFICE #_____OR_____in diam.

INSTALLER'S SIGNATURE:

_____

NAME OF INSTALLER:

_____

ADDRESS:

_____

_____

_____

PHONE:_____

MANUFACTURED BY:
SHERWOOD INDUSTRIES LTD.
6782 OLDFIELD RD. SAANICHTON, BC, CANADA V8M 2A3
www.enviro.com
February 19, 2007
C-11212