SHERWOOD INDUSTRIES IS AN ENVIRONMENTALLY RESPONSIBLE COMPANY. THIS MANUAL IS PRINTED ON RECYCLED PAPER.

PLEASE KEEP THESE INSTRUCTIONS FOR FUTURE REFERENCE

Enviro

PELLET STOVE

EF3

Freestanding, Fireplace Insert, and Built-In Heater

OWNER'S MANUAL





Sherwood Industries Ltd.
Saanichton, Canada

DIN 18 891
P–BWU 10/00016

IBP
Fraunhofer Institut bauphysik

PLEASE READ THIS ENTIRE MANUAL BEFORE INSTALLATION AND USE OF THIS PELLET BURNING ROOM HEATER. FAILURE TO FOLLOW THESE INSTRUCTIONS COULD RESULT IN PROPERTY DAMAGE, BODILY INJURY, OR EVEN DEATH.

CE 2007

Contact your building or fire officials about restrictions and installation inspection requirements in your area.

50-1070

Table of Contents

Introduction.....3
- Rating Label Location.....3
- Pellet Quality.....3
- Important Safety Data.....4
- Safety Warnings And Recommendations.....4

Operating Instructions.....7
- Operating Your Pellet Stove.....7
- Turning Your Pellet Stove Off.....7

Routine Cleaning and Maintenance.....8

Warranty.....11

Installation Data Sheet.....14

Introduction

* **This manual is designed for the home owner in conjunction with the technical manual.** *

Rating Label Location:

Freestanding: The rating label is located on the inside of the hopper lid.

Fireplace Insert and Built-In Heater: The rating label is located on the hopper cover.

Pellet Quality:

Pellet quality is important, please read the following:

Your enviro pellet stove has been designed to burn wood pellets only. Do not use any other type of fuel, as this will void any warranties stated in this manual.

The performance of your pellet stove is greatly affected by the type and quality of wood pellets being burned. As the heat output of various quality wood pellets differs, so will the performance and heat output of the pellet stove.

CAUTION: It is important to select and use only pellets that are dry and free of dirt or any impurities such as high salt content. Dirty fuel will adversely affect the operation and performance of the unit and will void the warranty.

ASH: The ash content of the fuel and operation of your stove will directly determine the frequency of cleaning. The use of high ash fuels may result in the stove needing to be cleaned daily. A low ash fuel may allow longer intervals between cleaning.

CLINKERING: [clinkers are silica (sand) or other impurities in the fuel that will form a hard mass during the burning process]. This hard mass will block the air flow through the Burn Pot Liner and affect the performance of the stove. Any fuel, even approved types, may tend to clinker. Check the Burn-Pot Liner daily to ensure that the holes are not blocked with clinkers. If they become blocked, remove the liner (when the unit is cold) and clean/scrape the clinkers out. Clean the holes with a small pointed object if required. Refer to the section Routine Cleaning and Maintenance.

PELLET FEED RATES: Due to different fuel densities and sizes, pellet feed rates may vary. This may require an adjustment to the slider damper setting or to the auger feed trim setting on Low.

Since Sherwood Industries Ltd. has no control over the quality of pellets that you use, we assume no liability for your choice in wood pellets.

Store pellets at least 36" (1 m) away from the pellet stove.

Introduction

Important Safety Data:

Please read this entire Owner's Manual before installing or operating your ENVIRO Pellet Stove. Failure to follow these instructions may result in property damage, bodily injury or even death. Contact your local building or fire official to obtain a permit and any information on installation restrictions and inspection requirements for your area.

To prevent the possibility of a fire, ensure that the appliance is properly installed by adhering to the installation instructions. An ENVIRO dealer will be happy to assist you in obtaining information with regards to your local building codes and installation restrictions.

The stove's exhaust system works with negative combustion chamber pressure and a slightly positive chimney pressure. It is very important to ensure that the exhaust system be sealed and airtight. The ash pan and viewing door must be locked securely for proper and safe operation of the pellet stove.

Do not burn with insufficient combustion air. A periodic check is recommended to ensure proper combustion air is admitted to the combustion chamber. Setting the proper combustion air is achieved by adjusting the slider damper located on the left side of the stove.

Minor soot or creosote may accumulate when the stove is operated under incorrect conditions such as an extremely rich burn (black tipped, lazy orange flames).

If you have any questions with regard to your stove or the above-mentioned information, please feel free to contact your local dealer for further clarification and comments.

Safety Warnings And Recommendations:

Caution: Do not connect to any air distribution duct or system.

Do not burn garbage or flammable fluids such as gasoline, naptha or engine oil.

Unit hot while in operation. Keep children, clothing and furniture away. Contact may cause skin burns.

FUEL: This pellet stove is designed and approved to only burn wood pellet fuel with up to 3% ash content. Dirty fuel will adversely affect the operation and performance of the unit and may void the warranty. Check with your dealer for fuel recommendations.

THE USE OF CORDWOOD IS PROHIBITED BY LAW.

SOOT: Operation of the stove with insufficient combustion air will result in the formation of soot which will collect on the glass, the heat exchanger, the exhaust vent system, and may stain the outside of the house. This is a dangerous situation and is inefficient. Frequently check your stove and adjust the slider/damper as needed to ensure proper combustion. **See: "Slider/Damper Setting".**

CLEANING: There will be some build up of fly ash and small amounts of creosote in the exhaust. This will vary due to the ash content of the fuel used and the operation of the stove. It is advisable to inspect and clean the exhaust vent semi-annually or every two tons of pellets.

Introduction

ASHES: Disposed ashes should be placed in a metal container with a tight-fitting lid. The closed container of ashes should be on a non-combustible floor on the ground, well away from all combustible materials pending final disposal. The ashes should be retained in the closed container until all cinders have thoroughly cooled before disposing of them.

ELECTRICAL: The use of a surge protected power bar is recommended. The unit must be grounded. The grounded electrical cord should be connected to a standard 220-240 volts (2.26-2.46 Amps), 50 hertz electrical outlet and also must be accessible. If this power cord should become damaged, a replacement power cord must be purchased from the manufacturer or a qualified ENVIRO dealer. Be careful that the electrical cord is not trapped under the appliance and that it is clear of any hot surfaces or sharp edges. This unit's maximum power requirement is 520 watts.

GLASS: Do not abuse the glass by striking or slamming the door. Do not attempt to operate the stove with broken glass. The stove uses ceramic glass. Replacement glass must be purchased from an ENVIRO dealer. Do not attempt to open the door and clean the glass while the unit is in operation or if glass is hot. To clean the glass, use a soft cotton cloth and mild window cleaner, gas or wood stove glass cleaner, or take a damp paper towel and dip into the fly ash. This is a very mild abrasive and will not damage the glass.

FLAMMABLE LIQUIDS: Never use gasoline, gasoline-type lantern fuel, kerosene, charcoal lighter fluid, or similar liquids to start or "freshen up" a fire in the heater. Keep all such liquids well away from the heater while it is in use.

SMOKE DETECTOR: Smoke detectors should be installed and maintained in the structure when installing and operating a pellet burning appliance.

OPERATION: The ash pan and door must be closed securely for proper and safe operation of the pellet stove. Also ensure all gaskets on the door are checked and replaced when necessary.

KEEP ASH PAN FREE OF RAW FUEL.

DO NOT PLACE UNBURNED OR NEW PELLET FUEL IN ASH PAN. A fire in the ash pan may occur.

If you have any questions with regards to your stove or the above-mentioned information, please feel free to contact your local dealer for further clarification and comments.

SINCE SHERWOOD INDUSTRIES LTD. HAS NO CONTROL OVER THE INSTALLATION OF YOUR STOVE, SHERWOOD INDUSTRIES LTD. GRANTS NO WARRANTY IMPLIED OR STATED FOR THE INSTALLATION OR MAINTENANCE OF YOUR STOVE. THEREFORE, SHERWOOD INDUSTRIES LTD. ASSUMES NO RESPONSIBILITY FOR ANY CONSEQUENTIAL DAMAGE(S).

SAVE THIS INSTRUCTION MANUAL FOR FUTURE REFERENCE

Operating Instructions

Automatic Safety Features:

Your pellet Stove has the following safety features:

A. The stove will shut off when the fire goes out and the exhaust temperature drops below 120°F (49°C).

B. The stove has a high temperature safety switch. If the temperature on the hopper reaches 200°F (93°C), the auger will automatically stop and the stove will shut down when the exhaust temperature cools. If this happens, call your local dealer to reset the 200°F (93°C) high limit switch. **ALSO FIND THE REASONS WHY THE UNIT OVERHEATED.**

C. The unit has a convection fan control over-ride. This function causes the convection fan to reach its full speed when the temperature at the back of the firebox reaches 160°F (71°C). This is a normal safety feature of your unit. To compensate for the fan cycling action that may occur, turn up the blower control proportionately to the heat output.

D. If the power goes out, the unit will stop running. When the power comes back on, the stove will not restart unless the exhaust temperature is still above 120°F (49 °C).

Slider/Damper Setting:

This is used to regulate the airflow through the pellet stove.

Circuit Board Model: A Qualified Service Technician or Installer should set the Slider Damper.

SPECIAL NOTES:

Pellet quality is a major factor in how the Pellet stove will operate. If the pellets have a high moisture content or ash content the fire will be less efficient and has a higher possibility of the fire building up and creating clinkers (hard ash build-up).

If the fire should happen to go out and the Dial-A-Fire has been set on the lowest setting, the Slider Damper should be pushed in slightly, decreasing the air in the firebox or the Dial-A-Fire and Auger Trim can be turned up slightly.

If, after long periods of burning, the fire builds up and overflows the burn pot or there is a build up of clinkers, this would be a sign that the pellet quality is poor, this requires more primary air, the slider damper must be pulled out to compensate. Pulling the slider damper out gives the fire more air.



Figure 1: Efficient Flame.

The easiest way to make sure that an efficient flame is achieved is to understand the characteristics of the fire.

- A tall, lazy flame with dark orange tips, requires more air – Open slider (pull out) slightly.
- A short, brisk flame, like a blowtorch, has too much air – Close slider (push in) slightly.
- If the flame is in the middle of these two characteristics with a bright yellow/orange, active flame with no black tips then the air is set for proper operation.

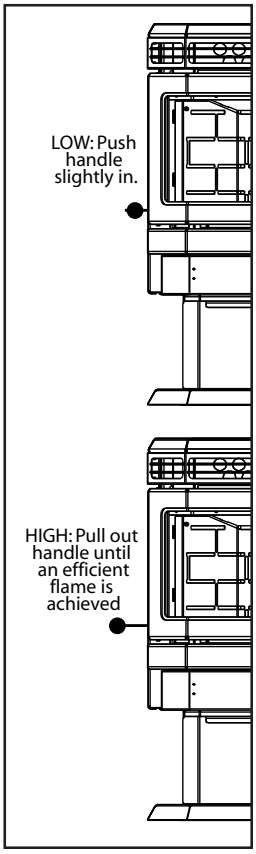

Figure 2: Slider / damper positions.

Operating Instructions

Operating Your Pellet Stove:

1. Check and fill hopper with pellets.
2. Make sure unit is plugged into a working outlet.
3. Switch the power "ON" by pushing the start-up switch once only.
4. Turn knob "B" to the 12 o'clock position. **(Lower grade pellets may need a higher setting on the feed rate). NOTE:** Unit will take longer to light if the hopper has been completely emptied or is the first fire up.
5. Wait until the fire is established, then turn "Knob B" to the desired heat output. The stove may not be able to burn in the BLUE ZONE if poor quality wood pellets are being used. Adjust the slider-damper to the appropriate setting (see "Slider/ Damper Setting" section.
6. If the stove should shut off after fifteen (15) minutes and there is still a fire in the firebox – press the start-up switch once more. If the fire went out, return to step 2 and re-light the stove.

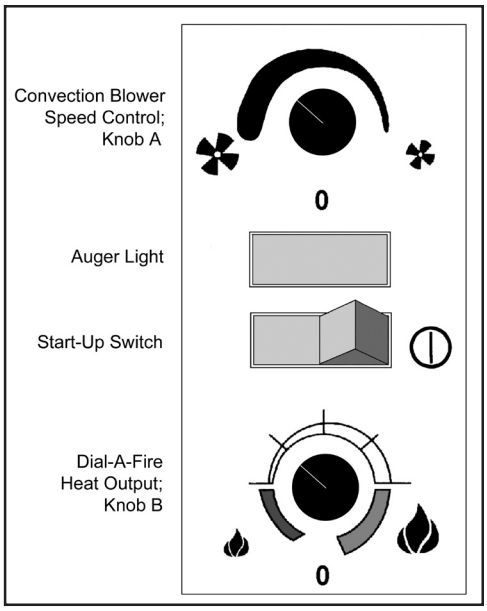

Figure 3: Dial-A-Fire control panel.

KNOB "A": Fan Controller. By adjusting the knob you will vary the rate of airflow into the room by varying the speed of the convection blower. When you first start the stove, it should be placed in the "OFF" position in order to heat the unit as quickly as possible. Once the room has come up to temperature, the control may be set to a comfortable level. ***Note:** The convection blower may cycle to high automatically depending on the setting of knobs "A" and "B". This is a normal safety feature of the unit.

SPECIAL NOTES: The flashing green light corresponds to the auger feed rate.
The scale on the Dial A Fire knob represents a range, not exact times. Wood pellets of differing quality may affect the performance of the stove. If the stove has trouble operating at the ends of its' range, turn the heat output knob back slightly.

KNOB "B": Dial a Fire Heat Output Knob. This knob controls the amount of heat output. The dial has a scale with the **blue zone** representing the coolest setting of the stove, and the **red zone** representing the hottest setting. The scale on knob "B" represents a range, not exact at times or fuel quantities. Wood pellets of differing quality may affect the performance of the stove. If the stove has trouble operating at either end of its range, turn the heat output knob back slightly.

Turning Your Pellet Stove Off:

To turn your stove off, simply turn the HEAT OUTPUT knob ("Knob B") counter-clockwise until the knob clicks to the "OFF" position. This will stop the feed of pellets. The blowers will continue to run and cool the stove. When cool enough, the stove will shut down. **DO NOT unplug unit while combustion fan is operating. This may lead to smoke escaping from the stove.**

Routine Cleaning and Maintenance

NOTE: Do not use abrasive cleaners to clean the surface or any part of the stove.

The following should be inspected periodically to ensure that the appliance is operating at its optimum and giving you excellent heat value:

2-3 Days / Weekly	Bi-Annually or 2 Tons of Fuel
Burn Pot and Liner	Exhaust Vent
Ash Pan	Fresh air Intake Tube
Inside Firebox	Blower Mechanisms
Door Glass	Heat exchanger tubes
Heat exchanger tubes	Behind firebox liners
Ash pan & Door gaskets	All Hinges
Door Latch	Post Season Clean-up

TOOLS REQUIRED TO CLEAN UNIT

- Torx T-20 Screwdriver
- 5/16" Wrench or Socket,
- Brush,
- Soft Cloth
- Vacuum with fine filter bag

The following list of components should be inspected and maintained routinely to ensure that the appliance is operating at its optimum and giving you excellent heat value:

BURN POT AND LINER (2-3 days)

This is the 'pot' where the pellets are burned. The burn pot and liner should be inspected every two to three days, to ensure proper air flow through the liner**. Failure to keep the liner clean may cause a build up of fuel past the burn pot liner and up the drop tube. This will cause the auger to jam and may result in pellets burning in the drop tube and hopper**.

Ensure the unit is cold before cleaning. To remove the burn pot and burn pot liner, open the door using the door handle provided, located on the left-hand side of the stove. Swing the door open. Lift the liner from the burn pot. Lift the burn pot from the firebox by gently lifting the front of the burn pot up first, then sliding the assembly from the air intake tube and the ignitor cartridge. Using a metal scraper, remove material that has accumulated or is clogging the liner's holes. Then dispose of the scrapped ashes from the liner and from inside the burn pot. Place the burn pot back into the stove, making sure that the pipes are properly inserted into the burn pot and the front tabs are placed in the firebox. Place the liner back into the burn-pot making sure that the ignitor hole in the liner is aligned with the ignitor tube. Push the liner up against the ignitor tube.

- If, after long periods of burning, the fire continually builds up and overflows the burn pot or there is a build up of clinkers, this is an indication that the pellet fuel quality is poor or the stove may need cleaning. Check the stove for ash build up (clean if required) and adjust the slider / damper to produce the proper clean combustion.

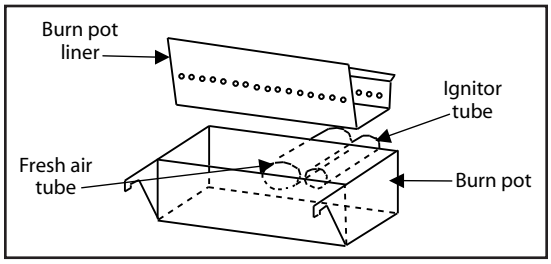

Figure 6: Burn pot with liner.

INSIDE FIREBOX (2-3 days)

For bi-weekly clean out, ash may be removed from behind the steel plates by rotating the circular cover to allow vacuuming behind the plates.

ASH PAN AND DOOR GASKETS (weekly)

After extended use the gasket may come loose. To repair or replace this, glue the gasket on, using high-temperature fiberglass gasket glue available from your local ENVIRO dealer. This is important to maintain an airtight assembly.

Routine Cleaning and Maintenance

ASH PAN (2-3 days)

Monitor the ash level every week. Remember that different pellet fuels will have different ash contents. Ash content is a good indication of fuel efficiency and quality. Refer to "Warnings and Recommendations" for disposal of ashes. **DO NOT PLACE UNBURNED OR RAW PELLET FUEL IN ASH PAN.**

Vacuum the ash pan and inside the pedestal. CAUTION: BECAUSE THE FLY ASH IS VERY FINE, THE USE OF A FINE FILTER VACUUM BAG WILL BE REQUIRED TO PREVENT ASH FROM BEING BLOWN BACK INTO THE ROOM. Please pay special attention that there are no hot ashes in the firebox or there could be a possibility of a fire hazard inside the vacuum cleaner. Place all hot ashes into a non-combustible container.

FREESTANDING ASH PAN:
The EF3 pellet stove freestanding's ash pan is located under the burner, in the pedestal, and has a latching mechanism to secure it. To remove the ash pan, unlock the latch on the ash pan and then pull the pan out.

INSERT ASH PAN:
The EF3 pellet stove insert's ash pan is located behind the lower grill.

HEAT EXCHANGER TUBES (2-3 days)

The handle for the heat exchanger cleaning rod is pointed out in Figure 7. This handle is to be pulled back and forth a few times **(ONLY WHEN THE UNIT IS COLD)** in order to clean away any fly ash that may have collected on the heat exchanger tubes. As different types of pellets produce different amounts of ash, cleaning of the tubes should be done on a regular basis to enable the unit to run efficiently.

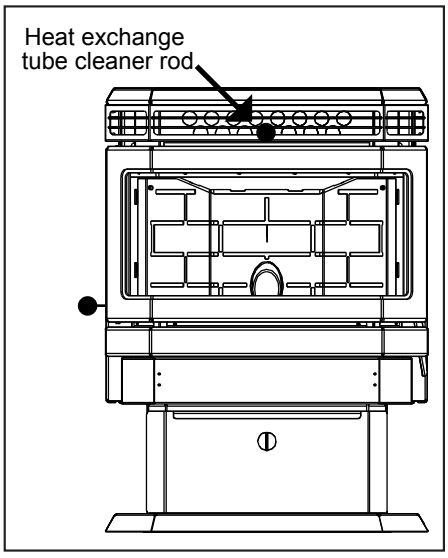

Figure 7: EF3 Heat exchanger rod.

FRESH AIR INTAKE (season)

Inspect periodically to be sure that it is not clogged with any foreign materials.

EXHAUST PASSAGES (season)

For bi-weekly clean out, ash may be removed from behind the steel plates by rotating the circular covers located behind the right and left side panels. Loosen the screw on the disks and open, this will allow vacuuming behind the firebox liner's plates.

Removal of the firebox backing for bi-annual cleaning:

- Remove the top baffle.
- Lubricate and then remove the seven (7) screws that hold the brick liner in place. Tilt the top of the brick panel towards the firebox opening and remove from the firebox
- Remove the top rod by first removing the screw that holds it in place, then slide the rod sideways
- Pull the side panels into the center of the firebox, then out
- Pull the center panel out.
- Clean and vacuum all passages thoroughly.

Routine Cleaning and Maintenance

Installation of firebox backing:

- Install the side panels in place. Insert center panel, hold the panels in place
- Install the top rod by sliding it into one side panel then across into the other panel. Screw rod in place.
- Re-install steel brick liner and screw in place.
- Replace top baffle

EXHAUST VENT (season)

The products of combustion will contain small particles of flyash. The flyash will collect in the exhaust venting system and restrict the flow of the flue gases. Incomplete combustion, such as occurs during startup, shutdown, or incorrect operation of the room heater will lead to some soot formation which will collect in the exhaust venting system. The exhaust venting system should be inspected at least once every year or after two tons of pellets to determine if cleaning is necessary. We recommend contacting your dealer for professional cleaning. To remove dust from the vent pipe, tap lightly on the pipe to dislodge any loose ash. Open the bottom of the "T" to dump the ash, then vacuum as much of the ash out of the vent pipe as possible.

BLOWER MECHANISMS (season)

Unplug the stove then open the right/left side panels to access the two blowers. Vacuum all dust from motors. Only the convection blower motor (on the right side of the stove) will require lubrication. The convection motor has two lubrication holes on it. Use two drops of SAE 20 light oil to lubricate every six months. Excess oil may damage the motor. The exhaust blower's motor has sealed bearings, DO NOT lubricate this motor.

DOOR GLASS (**It is recommended that your dealer replace the glass if broken.)**

The door glass is made of 5 mm thick, high temperature PYROCERAMIC. To replace the glass, unscrew and remove the four glass retainers. Remove the glass and any broken pieces. High temperature fiberglass tape should be used around the glass. Replace the glass, center the glass assembly in the frame, then screw the glass retainers back to the frame. The use of substitute materials is prohibited use only part EF-062.

POST SEASON CLEAN-UP

Once you are finished using the pellet appliance for the season, unplug the stove for added electrical protection. It is very important that the stove be cleaned and serviced as stated above.

CLEANING PLATED SURFACES

Please clean all fingerprints off of all plated parts, with denatured alcohol on a soft cloth, before firing the unit each time. Fingerprints, etc. can become permanently etched into the plating if not removed before operating the pellet heater.

BRICK PANEL

The paint on the steel brick panel may peel. This is due to extreme conditions applied to the paint and is in no way covered by warranty.

Warranty

Sherwood Industries Ltd. is the manufacturer of the Enviro line of heating products. At Sherwood Industries, our commitment to the highest level of quality and customer service is the most important thing we do. Each Enviro stove is built on a tradition of using only the finest materials and is backed by our Exclusive Lifetime Limited Warranty to the original purchaser. With Enviro, you're not just buying a stove, you're buying a company with years of unequalled performance and quality.

Limited Lifetime Warranty:
Under this warranty, Sherwood Industries Ltd. covers the fireplace or stove body and accessories against defects in materials and workmanship, for part repair or replacement for the first seven (7) years and limited labour for the first two (2) years to the original purchaser. This Warranty covers: Firebox, Heat Exchanger, Burn Pot, Firebox Panels, Ceramic Glass, Pedestals, Panels, Legs, Log Sets and Door Assembly. Please see the exclusions and limitation section below as certain restrictions and exclusions apply to this warranty.

Limited Three (3) Year Warranty
Under this warranty, Sherwood Industries Ltd. covers the Burn Pot Liner against defects in materials and workmanship, for part repair or replacement for the first three (3) years and limited labour for the first two (2) years to the original purchaser. Please see the exclusions and limitation section below as certain restrictions and exclusions apply to this warranty.

Limited Two (2) Year Warranty:
Under this warranty, Sherwood Industries Ltd. covers: Ignitor, Auger Motor, Circuit Board, Timers, Temp Sensors, Blowers, Vacuum Switch and Wire Harness, against defects in materials and workmanship, for part repair or replacement for the first two (2) years and limited labour for the first two (2) years to the original purchaser. Please see the exclusions and limitation section below as certain restrictions and exclusions apply to this warranty.

Limited One (1) Year Warranty:
Under this warranty, Sherwood Industries Ltd. covers all exterior surface finishes against defects in materials and workmanship, for part repair or replacement and limited labour for the first (1) year to the original purchaser. Please see the exclusions and limitation section below as certain restrictions and exclusions apply to this warranty.

Here is how our Warranty works
If you have any concerns with your Enviro product please contact the dealer where you purchased the fireplace or stove. Your dealer shall make all claims under this warranty in writing.

To the Dealer
When filling out a warranty claim please complete the following information on an official warranty claim form:

Customer information: Name, address and telephone number of purchaser and date of purchase.

Dealer information: Date of installation, name of installer and dealer, serial number of the appliance, nature of complaint, defects or malfunction, description and part numbers of any parts replaced.

To the Distributor
Sign and verify that work and information are correct.

Exclusions and Limitations:
1. This Warranty does not cover tarnish, discoloration or wear on the plating or paint.
2. This Warranty excludes wear and tear or breakage caused by cleaning, moving or service on log set.

Warranty

3. A qualified installer must install this stove or fireplace. This Limited Warranty covers defects in materials and workmanship only if the product has been installed in accordance with local building and fire codes; in their absence, refer to the owner's manual. If the product is damaged or broken as a result of any alteration, willful abuse, mishandling, accident, neglect, or misuse of the product, the Limited Warranty does not apply.
4. The stove must be operated and maintained at all times in accordance with the instructions in the Owner's Manual. If the unit shows signs of neglect or misuse, it is not covered under the terms of this Warranty policy. Performance problems due to operator error will not be covered by the Limited Warranty policy.
5. As this is a heating appliance some changes in colour of surface finishes may occur. This is not a flaw and as such is not covered under this warranty.
6. Some minor expansion, contraction, or movement of certain parts and resulting noise, is normal and not a defect and, therefore, is not covered under this Limited Warranty.
7. Misuse includes over-firing. Over-firing this appliance can cause serious damage and will nullify the Limited Warranty.
8. The Limited Warranty will cover glass thermal breakage only and will not cover misuse of the stove glass, including but not limited to glass that is struck, has surface contaminates or has had harsh or abrasive cleaners used on it.
9. This warranty does not cover products made or provided by other manufacturers and used in conjunction with the operation of this stove without prior authorization from Sherwood Industries Ltd. The use of such products may nullify the Limited Warranty on this stove. If unsure as to the extent of this Limited Warranty, contact your authorized Enviro dealer before installation.
10. Sherwood Industries Ltd. will not be responsible for inadequate performance caused by environmental conditions.
11. The Limited Warranty does not cover installation and operational related problems such as spillage caused by environmental conditions. Environmental conditions include but are not limited to nearby trees, buildings, roof tops, wind, hills, mountains, inadequate venting or ventilation, excessive offsets, negative air pressures or other influences caused by mechanical systems such as furnaces, fans, clothes dryers etc.
12. The Limited Warranty is void if:
    a) The stove has been operated in atmospheres contaminated by chlorine, fluorine or other damaging chemicals.
    b) The stove is subject to submersion in water or prolonged periods of dampness or condensation.
    c) Any damage to the unit, combustion chamber or other components due to water, or weather damage which is the result of, but not limited to, improper chimney/venting installation.
    c) Salt air in coastal areas or high humidity can be corrosive to the finish; these environments can cause rusting. Damage caused by salt air or high humidity is not covered by the Limited Warranty.
13. Exclusions to the Limited Warranty include: injury, loss of use, damage, failure to function due to accident, negligence, misuse, improper installation, alteration or adjustment of the manufacturer's settings of components, lack of proper and regular maintenance, alteration, or act of God.
14. The Limited Warranty does not cover damage caused to the fireplace or stove while in transit. If this occurs, do not operate the stove and contact your courier and/or dealer.
15. The Limited Warranty does not extend to or include firebox paint, door or glass gaskets with damage caused by normal wear and tear, or exterior paint discoloration or chipping, worn gaskets, etc.
16. The Limited Warranty does not include damage to the unit caused by abuse, improper installation, or modification of the unit.

17. Damage to plated surfaces caused by fingerprints, scratches, melted items, or other external scores and residues left on the plated surfaces from the use of abrasive cleaners or polishes is not covered in this warranty.
18. The Limited Warranty does not cover tarnish, discoloration or wear on the plated surfaces.
19. The paint on the Metal Brick Liner may peel. This is due to the extreme conditions applied to the paint during normal usage. It is not a flaw and is not covered under warranty.
20. Sherwood Industries Ltd. is free of liability for any damages caused by the fireplace or stove, as well as inconvenience expenses and materials. The Limited Warranty does not cover incidental or consequential damages.
21. The Limited Warranty does not cover any loss or damage incurred by the use or removal of any component or apparatus to or from the Enviro fireplace or stove without the express written permission of Sherwood Industries Ltd. and bearing a Sherwood Industries Ltd. label of approval.
22. Any statement or representation of Enviro products and their performance contained in Enviro advertising, packaging literature, or printed material is not part of the Limited Warranty.
23. The Limited Warranty is automatically voided if the fireplace or stove's serial number has been removed or altered in any way. If the stove is used for commercial purposes, it is excluded from the Limited Warranty.
24. No dealer, distributor, or similar person has the authority to represent or warrant Enviro products beyond the terms contained within the Limited Warranty. Sherwood Industries Ltd. assumes no liability for such warranties or representations.
25. Sherwood Industries Ltd. will not cover the cost of the removal or re-installation of the stove, hearth, facing, mantels, venting or other components.
26. Labour to replace or repair items under this Limited Warranty will be covered per our warranty service fee reimbursement schedule. Labour rates are set per component and as such total labour costs may not be covered.
27. Sherwood Industries Ltd. is not liable for freight or labour on any stove replaced in-field and is not liable for travel costs for service work. In the event of in-home repair work, the customer will pay any in-home travel fees or service charges required by the Authorized Dealer.
28. At no time will Sherwood Industries Ltd. be liable for any consequential damages which exceed the purchase price of the unit. Sherwood Industries Ltd. has no obligation to enhance or modify any stove once manufactured (example: as a stove evolves, field modifications or upgrades will not be performed).
29. This Limited Warranty is applicable only to the original purchaser and it is non-transferable.
30. This warranty only covers Enviro products that are purchased through an authorized Enviro dealer.
31. If for any reason any section of the Limited Warranty is declared invalid, the balance of the warranty remains in effect and all other clauses shall remain in effect.
32. The Limited Warranty is the only warranty supplied by Sherwood Industries Ltd., the manufacturer of the stove. All other warranties, whether express or implied, are hereby expressly disclaimed and purchaser's recourse is expressly limited to the Limited Warranty.
33. Sherwood Industries Ltd. and its employees or representatives will not assume any damages, either directly or indirectly, caused by improper usage, operation, installation, servicing or maintenance of this stove.
34. Sherwood Industries Ltd. reserves the right to make changes without notice. Please complete and mail the warranty registration card and have the installer fill in the installation data sheet in the back of the manual for warranty and future reference.
35. Sherwood Industries Ltd. is responsible for stocking parts for a maximum of seven (7) years after discontinuing the manufacture or incorporation of the item into its products. An exception to this would be if an OEM supplier is not able to supply a part.

Installation Data Sheet

The following information must be recorded by the installer for warranty purposes and future reference.

NAME OF OWNER:

_____

ADDRESS:

_____

_____

_____

PHONE:_____

NAME OF DEALER:

_____

ADDRESS:

_____

_____

_____

PHONE:_____

MODEL:_____

SERIAL NUMBER:_____

DATE OF PURCHASE: _____ (dd/mm/yyyy)

DATE OF INSTALLATION:_____(dd/mm/yyyy)

MAGNEHELIC AT INSTALL:_____

INSTALLER'S SIGNATURE:

_____

NAME OF INSTALLER:

_____

ADDRESS:

_____

_____

_____

PHONE:_____

MANUFACTURED BY:
SHERWOOD INDUSTRIES LTD.
6782 OLDFIELD RD. SAANICHTON, BC, CANADA V8M 2A3
www.enviro.com
January 9, 2007
C-11220