SHERWOOD INDUSTRIES IS AN ENVIRONMENTALLY RESPONSIBLE COMPANY. THIS MANUAL IS PRINTED ON RECYCLED PAPER.

PLEASE KEEP THESE INSTRUCTIONS FOR FUTURE REFERENCE

Enviro

PELLET STOVE

WINDSOR

TECHNICAL MANUAL



Sherwood Industries Ltd.
Saanichton, Canada

DIN 18 891
P-BWU 10/00018

IBP
Fraunhofer Institut bauphysik

CE 2007

Contact your building or fire officials about restrictions and installation inspection requirements in your area.

PLEASE READ THIS ENTIRE MANUAL BEFORE INSTALLATION AND USE OF THIS PELLET-BURNING ROOM HEATER. FAILURE TO FOLLOW THESE INSTRUCTIONS COULD RESULT IN PROPERTY DAMAGE, BODILY INJURY OR EVEN DEATH.

50-836

Table of Contents

Introduction....3
- Rating Label Location....3
- Important Safety Data....3
- Safety Warnings And Recommendations....3

Installation....5
- Deciding Where to Locate your Pellet Appliance....5
- Removing Pellet Stove From Pallet....5
- Dimensions....6
- Clearances to Combustibles....6
- Alcove Clearances....7
- Mobile Home Installation....7
- Exhaust And Fresh Air Intake Locations....8
- Outside Fresh-Air Connection....8
- Vent Termination Requirements....9
- Corner Through Wall Installation....10
- Horizontal Exhaust Through Wall Installation....10
- Vertical Rise with Horizontal Termination Installation (Recommended)....12
- Through Concrete Wall With Vertical Rise Installations....12
- Inside Vertical Installations....13
- Outside Vertical Installations....14
- Hearth Mount Installation....15
- Installation with Exterior Mounted Exhaust Blower....16
- Through Wall Vertical Installation With Exhaust Blower....18
- Thermostat Installation....19
- Slider/Damper Setting....19

Troubleshooting....21
Wiring Diagram....24
Parts List - Components....25
Parts List - Cast....27
Parts Diagram - Components....29
Parts Diagram - Steel & Cast....30
Warranty....31
Installation Data Sheet....34

Introduction

* **This manual is designed for the technician in conjunction with the owner's manual. ***

Rating Label Location:

The rating label is located on the inside of the hopper lid.

Important Safety Data:

Please read this entire Owner's Manual before installing or operating this ENVIRO Pellet Stove. Failure to follow these instructions may result in property damage, bodily injury or even death. Contact your local building or fire official to obtain a permit and any information on installation restrictions and inspection requirements for your area.

To prevent the possibility of a fire, ensure that the appliance is properly installed by adhering to the installation instructions. An ENVIRO dealer will be happy to assist you in obtaining information with regards to your local building codes and installation restrictions.

Be sure to maintain the structural integrity of the home when passing a vent through walls, ceilings, or roofs.

The stove's exhaust system works with negative combustion chamber pressure and a slightly positive chimney pressure. It is very important to ensure that the exhaust system be sealed and airtight. The ash pan and viewing door must be locked securely for proper and safe operation of the pellet stove.

Do not burn with insufficient combustion air. A periodic check is recommended to ensure proper combustion air is admitted to the combustion chamber. Setting the proper combustion air is achieved by adjusting the slider damper located on the left side of the stove.

When installing the stove in a mobile home, it must be electrically grounded to the steel chassis of the home and bolted to the floor. Make sure that the structural integrity of the home is maintained and all construction meets local building codes.

Minor soot or creosote may accumulate when the stove is operated under incorrect conditions such as an extremely rich burn (black tipped, lazy orange flames).

If you have any questions with regard to your stove or the above-mentioned information, please feel free to contact your local dealer for further clarification and comments.

Safety Warnings And Recommendations:

Caution: Do not connect to any air distribution duct or system.
Do not burn garbage or flammable fluids such as gasoline, naptha or engine oil.
Unit hot while in operation. Keep children, clothing and furniture away. Contact may cause skin burns.

SOOT: Operation of the stove with insufficient combustion air will result in the formation of soot which will collect on the glass, the heat exchanger, the exhaust vent system, and may stain the outside of the house. This is a dangerous situation and is inefficient. Frequently check your stove and adjust the slider/damper as needed to ensure proper combustion. **See: "Installation - Slider/Damper Setting".**

Introduction

ELECTRICAL: The use of a surge protected power bar is recommended. The unit must be grounded. The grounded electrical cord should be connected to a standard 220-240 volts (2.92-3.18 Amps), 50 hertz electrical outlet and also must be accessible. If this power cord should become damaged, a replacement power cord must be purchased from the manufacturer or a qualified ENVIRO dealer. Be careful that the electrical cord is not trapped under the appliance and that it is clear of any hot surfaces or sharp edges. This unit's maximum power requirement is 700 watts.

GLASS: Do not abuse the glass by striking or slamming the door. Do not attempt to operate the stove with broken glass. The stove uses ceramic glass. Replacement glass must be purchased from an ENVIRO dealer. Do not attempt to open the door and clean the glass while the unit is in operation or if glass is hot. To clean the glass, use a soft cotton cloth and mild window cleaner, gas or wood stove glass cleaner, or take a damp paper towel and dip into the fly ash. This is a very mild abrasive and will not damage the glass.

FLAMMABLE LIQUIDS: Never use gasoline, gasoline-type lantern fuel, kerosene, charcoal lighter fluid, or similar liquids to start or "freshen up" a fire in the heater. Keep all such liquids well away from the heater while it is in use.

SMOKE DETECTOR: Smoke detectors should be installed and maintained in the structure when installing and operating a pellet burning appliance.

OPERATION: The ash pan and door must be closed securely for proper and safe operation of the pellet stove. Also ensure all gaskets on the door are checked and replaced when necessary.

INSTALLATION: Be sure to maintain the structural integrity of your home when passing a vent through walls, ceilings, or roofs. It is recommended that the unit be secured into its position in order to avoid any displacement.

DO NOT INSTALL A FLUE DAMPER IN THE EXHAUST VENTING SYSTEM OF THIS UNIT.

DO NOT CONNECT THIS UNIT TO A CHIMNEY FLUE SERVING ANOTHER APPLIANCE.

FRESH AIR: Outside Fresh Air is optional. Consider all large air moving devices when installing your unit and provide room air accordingly. Limited air for combustion may result in poor performance, smoking and other side effects of poor combustion.

If you have any questions with regards to your stove or the above-mentioned information, please feel free to contact your local dealer for further clarification and comments.

SINCE SHERWOOD INDUSTRIES LTD. HAS NO CONTROL OVER THE INSTALLATION OF YOUR STOVE, SHERWOOD INDUSTRIES LTD. GRANTS NO WARRANTY IMPLIED OR STATED FOR THE INSTALLATION OR MAINTENANCE OF YOUR STOVE. THEREFORE, SHERWOOD INDUSTRIES LTD. ASSUMES NO RESPONSIBILITY FOR ANY CONSEQUENTIAL DAMAGE(S).

SAVE THIS INSTRUCTION MANUAL FOR FUTURE REFERENCE

Installation

Deciding Where to Locate your Pellet Appliance:

1. Check clearances to combustibles (see Installation - Clearances to Combustibles and Installation - Alcove Clearances).
2. Do not obtain combustion air from an attic, garage or any unventilated space. Combustion air may be obtained from a ventilated crawlspace.
3. Do not install the stove in a bedroom.
4. You can vent the stove through an exterior wall behind the unit or connect it to an existing masonry or metal chimney (must be lined if the chimney is over 6" (15 cm) diameter, or over 28 inches² (180 cm²) cross sectional area). An interior vent can be used with approved pipe passing through the ceiling and roof.
5. Locate the stove in a large and open room that is centrally located in the house. This will optimize heat circulation.
6. The power cord is 8 feet (2.43 m) long and may require a grounded extension cord to reach the nearest electrical outlet.

Removing Pellet Stove From Pallet:

Remove screws from the two (2) hold-down brackets that secure the Windsor to the pallet. Lift the brackets up to unhook from the chassis.

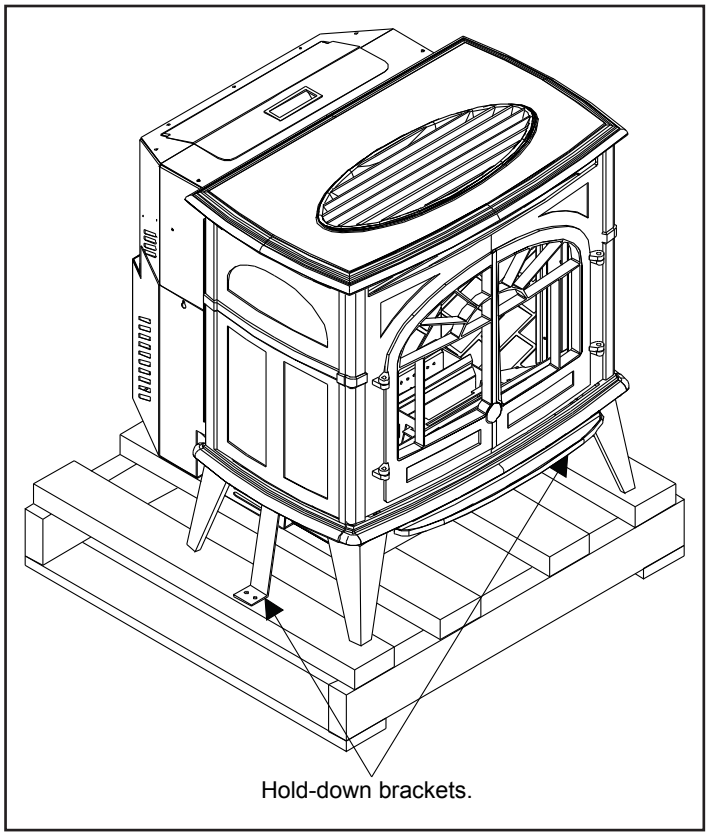

Figure 1: Removing Freestanding Stove From the Pallet.

Installation

Dimensions:

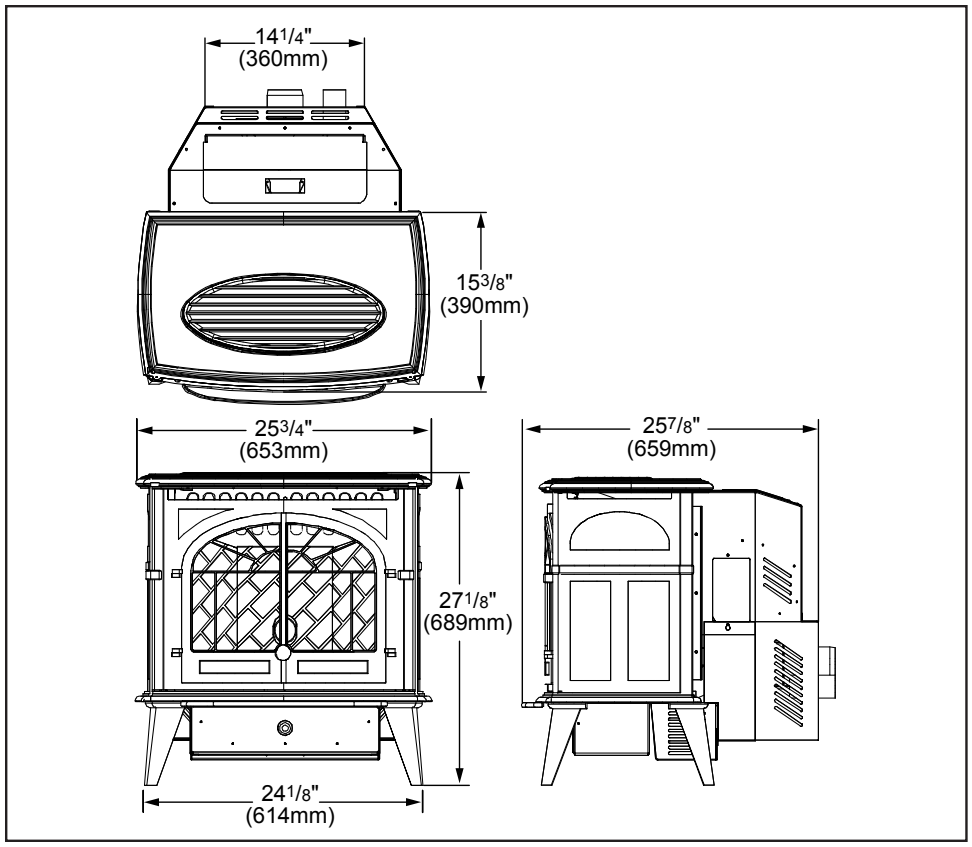

Figure 2: Windsor Freestanding Dimensions.

Clearances to Combustibles:

These dimensions are minimum clearances but it is recommended that you ensure sufficient room for serving, routine cleaning and maintenance.

This pellet stove requires floor protection. The floor protection must be non-combustible, extending beneath the stove the full width and depth of the unit including 6" (150 mm) in front for ember protection.

Hearth Pad Size:
Width: 25 ⅝" (651 mm)
Depth: 32 ⅛ " (816 mm)

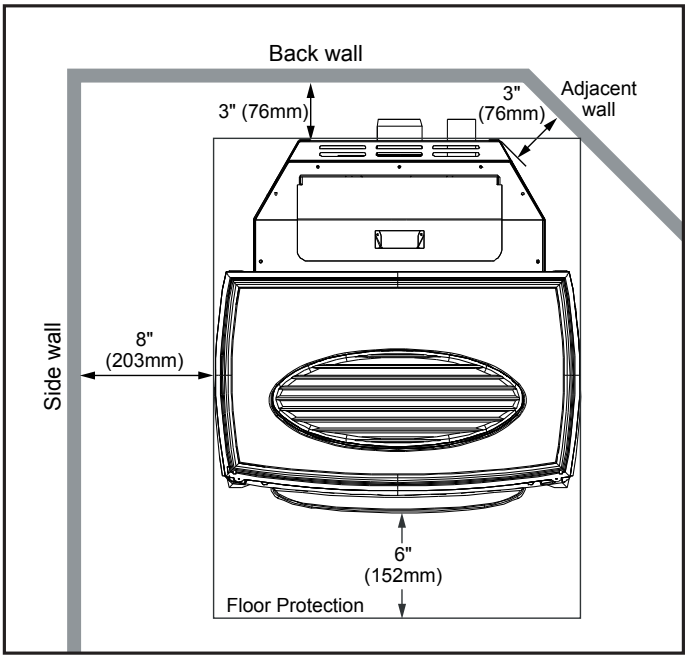

Figure 3: Minimum Clearances to Combustibles for Freestanding Windsor.

Installation

Alcove Clearances:

This unit may be installed in an alcove. Maintain the clearances to combustibles shown in Figure 4.

Install vent at clearances specified by the vent manufacturer.

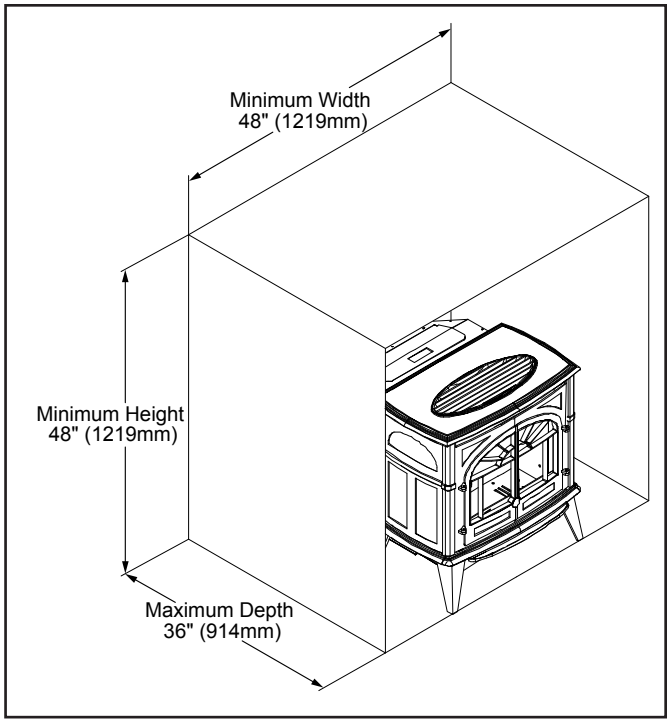

Figure 4: Alcove Clearances.

Mobile Home Installation:

- Secure the heater to the floor using the holes in the leg of the appliance (normally used for the leveling legs).
- Ensure the unit is electrically grounded to the chassis of your home (permanently).

<u>WARNING:</u> Do not install in a room people sleep in.

<u>CAUTION</u>: The structural integrity of the manufactured home floor, wall and ceiling/roof must be maintained

- Outside fresh air is mandatory. Secure outside air connections directly to fresh air intake pipe and secure with three (3) screws evenly spaced.

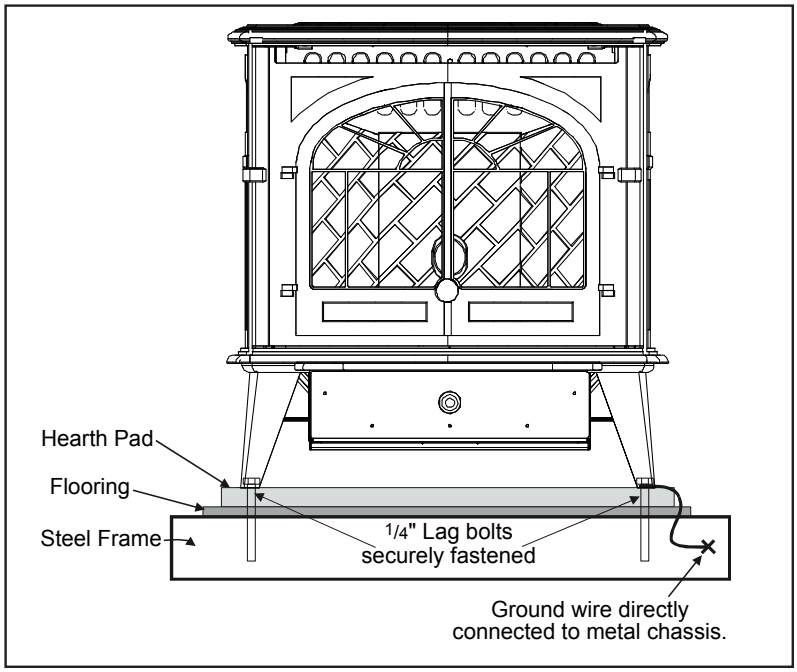

Figure 5: Mobile Home Install Mounting.

Installation

Exhaust And Fresh Air Intake Locations:

INSTALL VENT AT CLEARANCES SPECIFIED BY THE VENTING MANUFACTURER

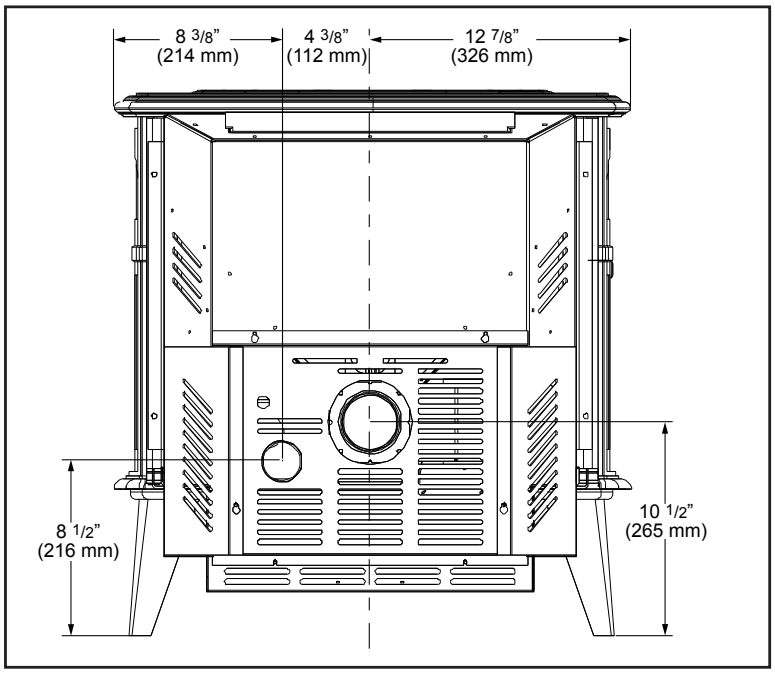

Figure 6: Inlet and Outlet Location.

EXHAUST

Base of unit to center of flue	10 5/8"	(270 mm)
Side of unit to center of flue	12 1/8"	(308 mm)
Center of unit to center of flue	¾"	(19 mm)

FRESH AIR INTAKE.

Base of unit to center of intake	8 ¾"	(222 mm)
Side of unit to center of intake	7 ¾"	(197 mm)
Center of unit to center of flue	5 1/8"	(130 mm)

Outside Fresh-Air Connection:

Outside fresh air is mandatory when installing this unit in airtight homes and mobile homes.

A Fresh-air intake is strongly recommended for all installations. Failure to install intake air may result in improper combustion as well as the unit smoking during power failures.

When connecting to an outside fresh air source, do not use plastic or combustible pipe. A 2" minimum (51 mm) ID (inside diameter) steel, aluminum or copper pipe should be used. It is recommended, when you are installing a fresh air system, to keep the number of bends in the pipe to a minimum.

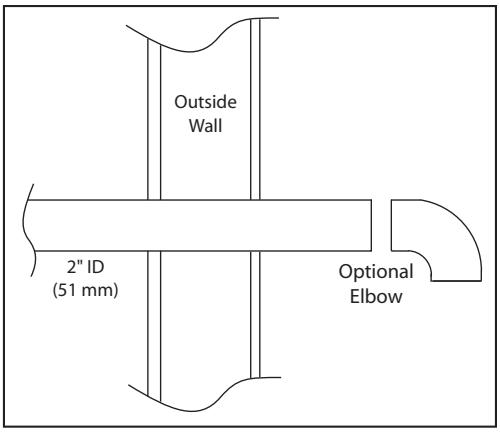

Figure 7: Outside Air Connection.

Vent Termination Requirements:

IT IS RECOMMENDED THAT YOUR PELLET STOVE BE INSTALLED BY AN AUTHORIZED DEALER/INSTALLER.

Table 1: Use in conjunction with Figure 8 for allowable exterior vent termination locations.

Letter	Minimum Clearance	Description
A	24 in (61 cm)	Above grass, top of plants, wood, or any other combustible materials.
B	48 in (122 cm)	Beside/below any door or window that may be opened. (18" (46 cm) for outside fresh air install.)
C	12 in (30 cm)	Above any door or window that may be opened. (9" (23 cm) for outside fresh air install.)
D	24 in (61 cm)	To any adjacent building, fences and protruding parts of the structure.
E	24 in (61 cm)	Below any eave or roof overhang
F	12 in (30 cm)	To outside corner.
G	12 in (30 cm)	To inside corner, combustible wall (vertical and horizontal terminations).
H	3 ft (91 cm) within a height of 15 ft (4.5 m) above the meter/regulator assembly	To each side of center line extended above natural gas or propane meter/ regulator assembly or mechanical vent.
I	3 ft (91 cm)	From any forced air intake of other appliance
J	12 in (30 cm)	Clearance to non-mechanical air supply inlet to building, or the combustion air inlet to any appliance.
K	24 in (61 cm)	Clearance above roof line for vertical terminations.
L	7 ft (2.13 m)	Clearance above paved sidewalk or paved driveway located on public property.

1. Do not terminate the vent in any enclosed or semi-enclosed areas such as a carport, garage, attic, crawlspace, narrow walkway, closely fenced area, under a sundeck or porch, or any location that can build up a concentration of fumes such as stairwells, covered breezeway, etc.

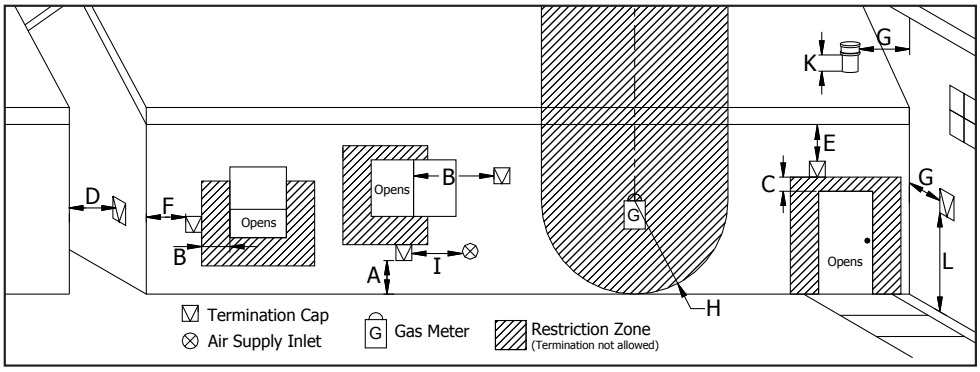

Figure 8: Use in conjunction with Table 1 for allowable exterior vent termination locations.

2. Vent surfaces can become hot enough to cause burns if touched by children. Non-combustible shielding or guards may be required.
3. Termination must exhaust above the inlet elevation. It is recommended that at least five feet of vertical pipe be installed outside when the appliance is vented directly through a wall, to create some natural draft to prevent the possibility of smoke or odor during appliance shut down or power failure. This will keep exhaust from causing a nuisance or hazard from exposing people or shrubs to high temperatures. In any case, the safest and preferred venting method is to extend the vent through the roof vertically.
4. Distance from the bottom of the termination and grade is 12" (30 cm) minimum. This is conditional upon the plants and nature of grade surface. The exhaust gases are hot enough to ignite grass, plants and shrubs located in the vicinity of termination. The grade surface must not be lawn.
5. If the unit is incorrectly vented or the air to fuel mixture is out of balance, a slight discoloration of the exterior of the house might occur. Since these factors are beyond the control of Sherwood Industries Ltd, we grant no guarantee against such incidents.

NOTE: Venting terminals shall not be recessed into walls or siding.

Corner Through Wall Installation:

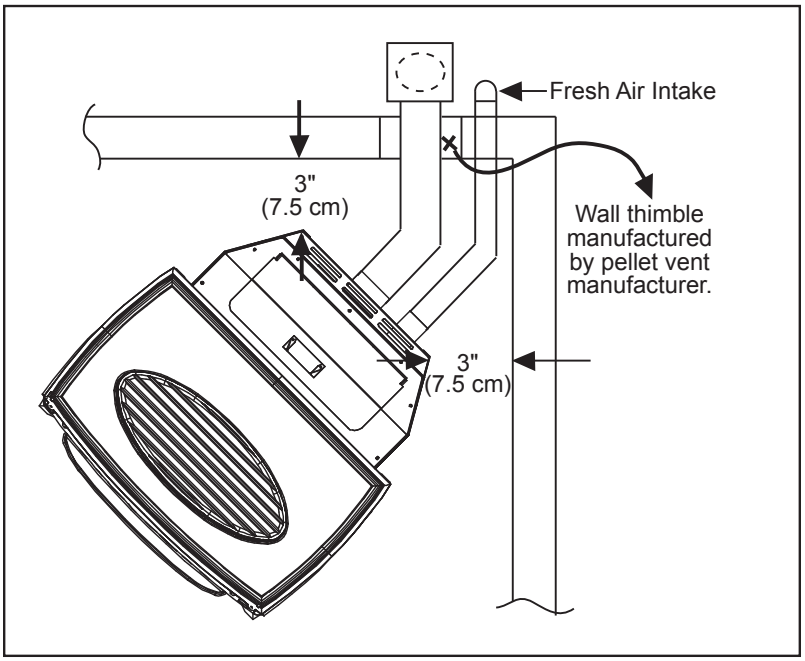

Figure 9: Corner Installation.

Horizontal Exhaust Through Wall Installation:

Vent installation: install vent at clearances specified by the vent manufacturer.

A chimney connector shall not pass through an attic or roof space, closet or similar concealed spaces, or a floor, or ceiling. Where passage through a wall or partition of combustible construction is desired, the installation shall conform to CAN/CSA-B365 Installation Code for Solid-Fuel-Burning Appliances and Equipment. Only use venting of L or PL type with an inside diameter of 3 or 4 inches (7.6 or 10.1 cm).

1. Choose a location for your stove that meets the requirements stated in this manual and allows installation with the least amount of interference to house framing, plumbing, wiring, etc.
2. Install a non-combustible hearth pad (where necessary).
3. Place the appliance 15” (37.5 cm) away from the wall. If the stove is to be set on a hearth pad, set the unit on it.
4. Locate the center of the exhaust pipe on the stove. Extend that line to the wall. Once you have located the center point on the wall, refer to pellet vent manufacturer installation instructions for correct hole size and clearance to combustibles.
5. Install the wall thimble as per the instructions written on the thimble. Maintain an effective vapour barrier in accordance with local building codes.
6. Install a length of 3” (76 mm) or 4” (101 mm) vent pipe into the wall thimble. The pipe should install easily into the thimble.
7. Install the fresh air intake (see Installation - Outside Fresh Air Connection).
8. Connect the exhaust vent pipe to the exhaust pipe on the stove. Seal the connection with high temperature silicone.
9. Push the stove straight back, leaving a minimum of 3” (76 mm) clearance from the back of the stove to the wall. Seal the vent pipe to the thimble with high temperature silicone.

10. The pipe must extend at least 12" (30 cm) away from the building. If necessary, bring another length of pipe (PL type) to the outside of the home to connect to the first section. Do not forget to place high temperature silicone around the pipe that passes through the thimble.

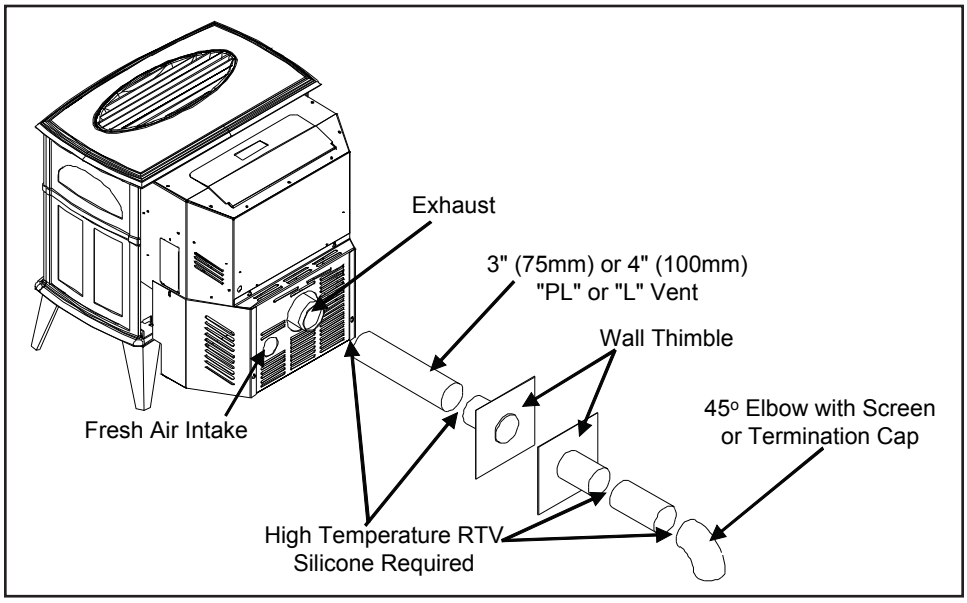

Figure 10: Straight through wall Installation.

11. Install a vertical pipe, or if all requirements for direct venting are met, install vent termination. The stainless steel cap termination manufactured by the vent manufacturer is recommended. However, when the vent terminates several feet above ground level and there are no trees, plants, etc. within several feet, a 45° elbow can be used as termination. The elbow must be turned down to prevent rain from entering.

NOTE:

- Some horizontal through wall installations may require a "T" and 3 to 5 feet (91 to 152 cm) of vertical pipe outside the building to help naturally draft in the unit.
- This may be required if a proper burn cannot be maintained, after the stove has been tested and the airflow set.
- This is due to the back pressure in the exhaust caused by airflow around the structure.
- All sections of pipe must have three (3) screws evenly spaced and all horizontal and vertical vent sections located within the house must have a bead of high temperature silicone installed on the male end of the pipe before installation to create a gas tight seal.
- The termination must be 12 inches (30 cm) from the outside wall and 12 inches (30 cm) above the ground.
- A 45° elbow with a rodent screen may be used in place of the termination cap (or stainless steel termination hood).

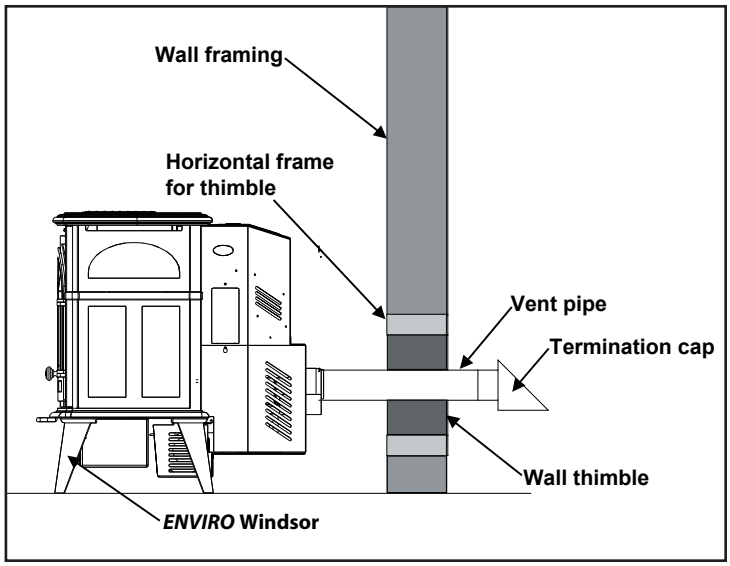

Figure 11: Straight through Wall Installation - Side View.

Vertical Rise with Horizontal Termination Installation (Recommended):

A 45° elbow with a rodent screen may be used in place of the termination cap (or stainless steel termination hood).

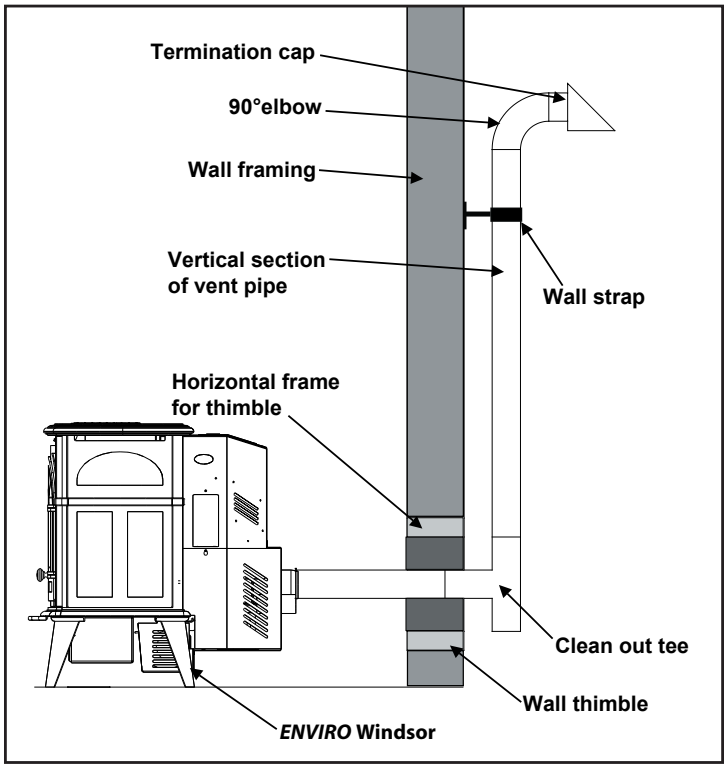

Figure 12: Through Wall with Horizontal Termination.

Through Concrete Wall With Vertical Rise Installations:

A 45° elbow with a rodent screen may be used in place of the termination cap (or stainless steel termination hood).

This is the recommended installation to use if there is a concrete or retaining wall in line with exhaust vent on pellet stove.

The termination must be 12" (305 mm) from the outside wall and 12" (305 mm) above the ground.

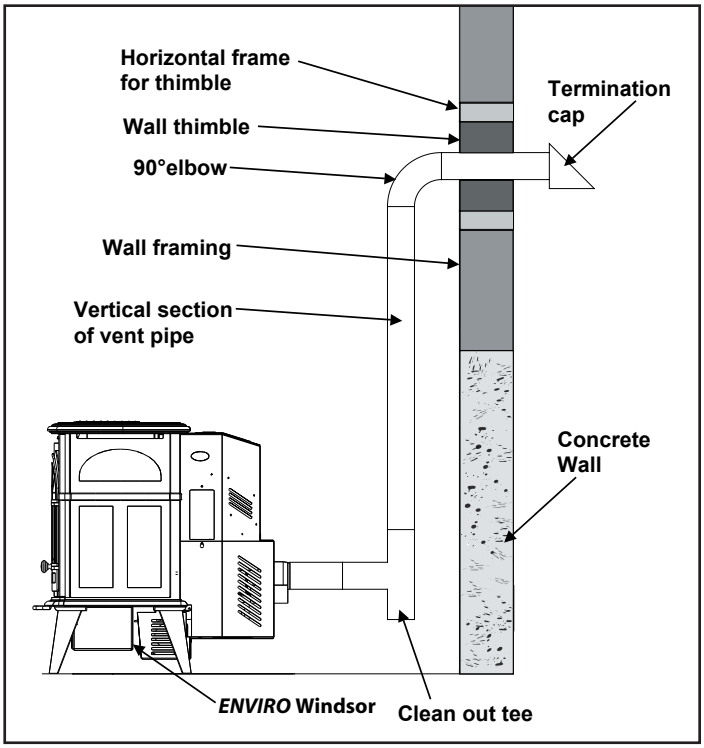

Figure 13: Vertical rise with Horizontal Termination.

Inside Vertical Installations:

1. Choose a stove location that is ideal. See the section "Installation - Deciding Where to Locate your Pellet Appliance."
2. Place the unit on the hearth pad (if installed on a carpeted surface) and space the unit in a manner so when the pellet vent is installed vertically, it will be 3" (76 mm) away from a combustible wall.
3. Locate the center of the fresh air intake pipe on the unit. Match that center with the same point on the wall and cut a hole about 2" (52 mm) in diameter.
4. Install the fresh air intake pipe.
5. Install the tee with clean out.
6. Install the pellet vent upward from there. When you reach the ceiling, make sure that the vent goes through the ceiling fire stop. Maintain a 3" (76 mm) distance to combustibles and keep attic insulation away from the vent pipe. Maintain an effective vapor barrier.
7. Finally, extend the pellet vent to go through the roof flashing.
8. Ensure that the rain cap is approximately 24" (610 mm) above the roof.

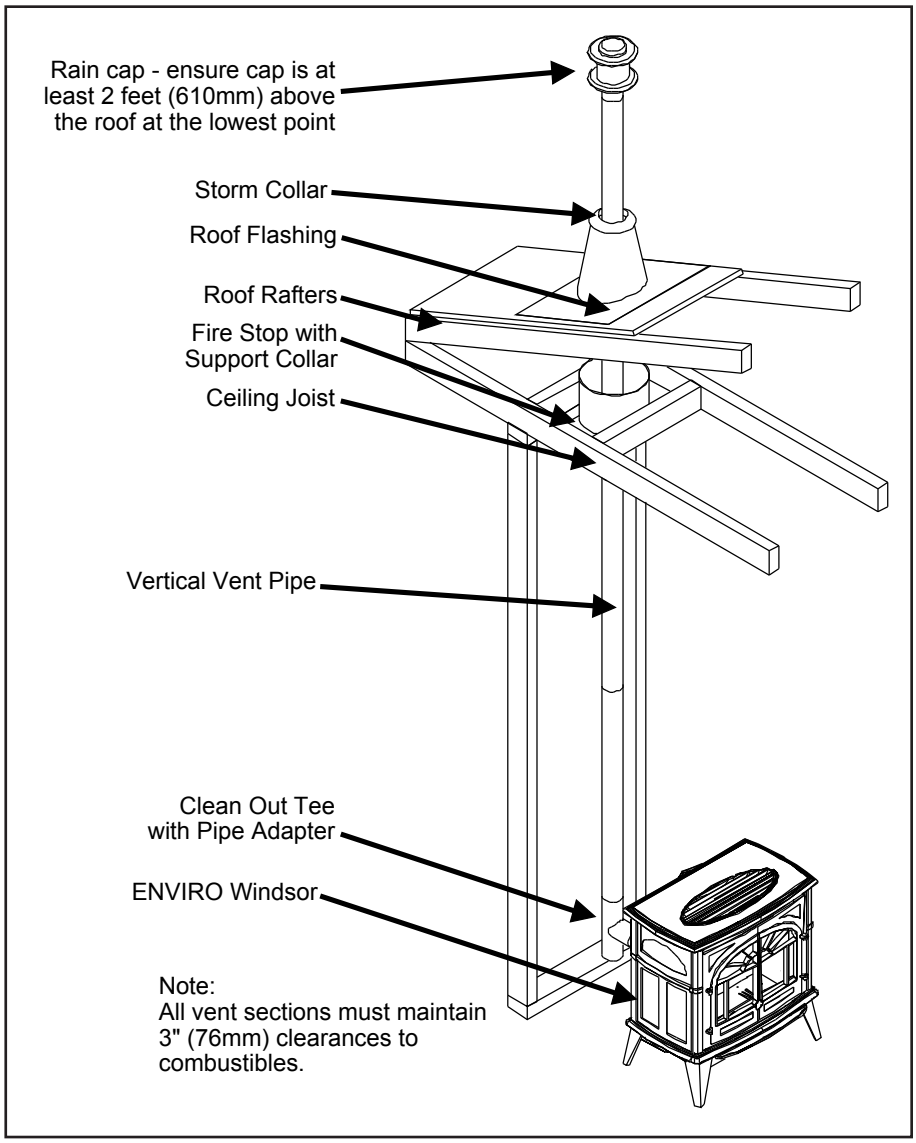

Figure 14: Inside Vertical Installation.

Outside Vertical Installations:

To accomplish a outside vertical pipe installation, follow steps 1 through 5 in the "Inside Vertical Installations" section and then finish it by performing the following (refer to Figure 15).

1. Install a tee with clean out on the outside of the house.
2. Install PL vent upward from the tee. Make sure that you install support brackets to keep the vent straight and secure.
3. Install ceiling thimble and secure the flashing as you go through the roof.
4. Ensure that the rain cap is approximately 24" (610 mm) above the roof.

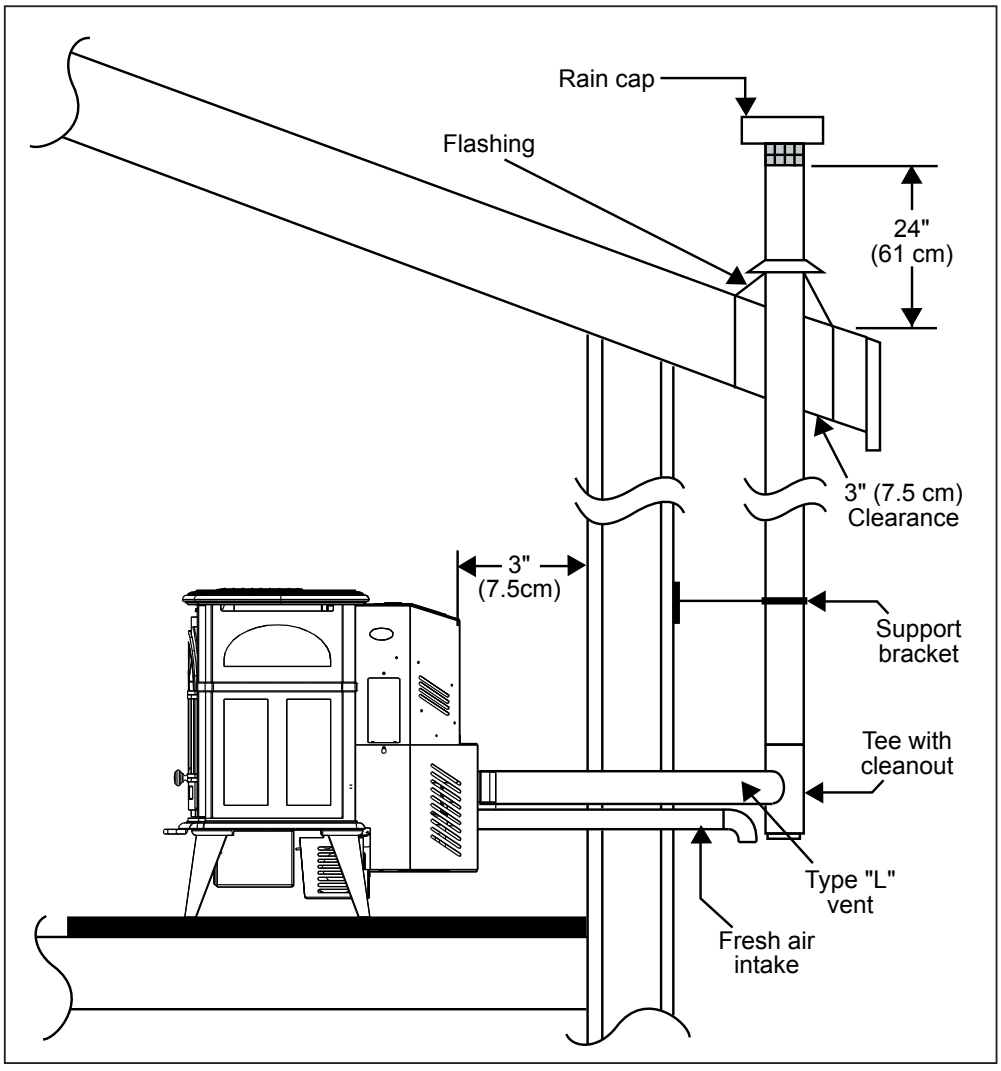

Figure 15: Outside Vertical Installation.

Hearth Mount Installation:

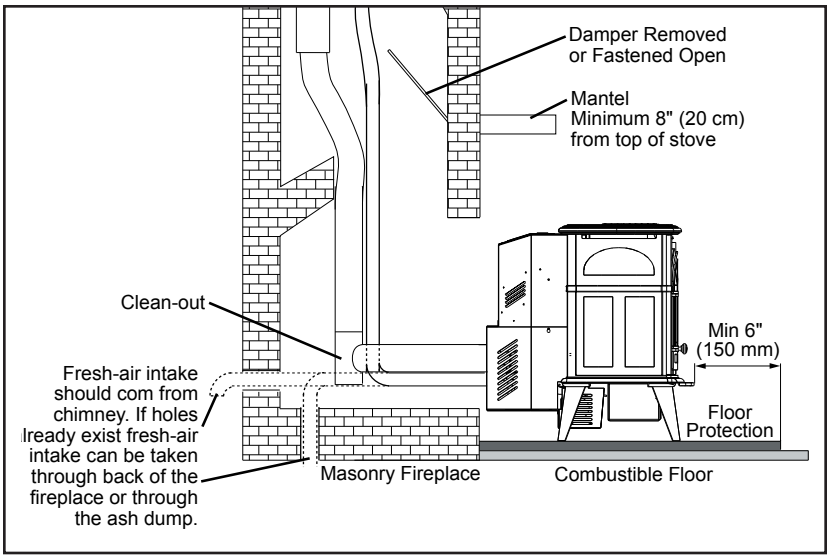

Figure 16: Hearth Mount - Side View.

1. Lock fireplace damper in the open position.
2. Install a positive flue connector at the fireplace dampers.
3. Connect a clean-out tee or a 90° elbow to the exhaust pipe.
4. Install flexible stainless steel liner or listed pellet vent to the top of the chimney.

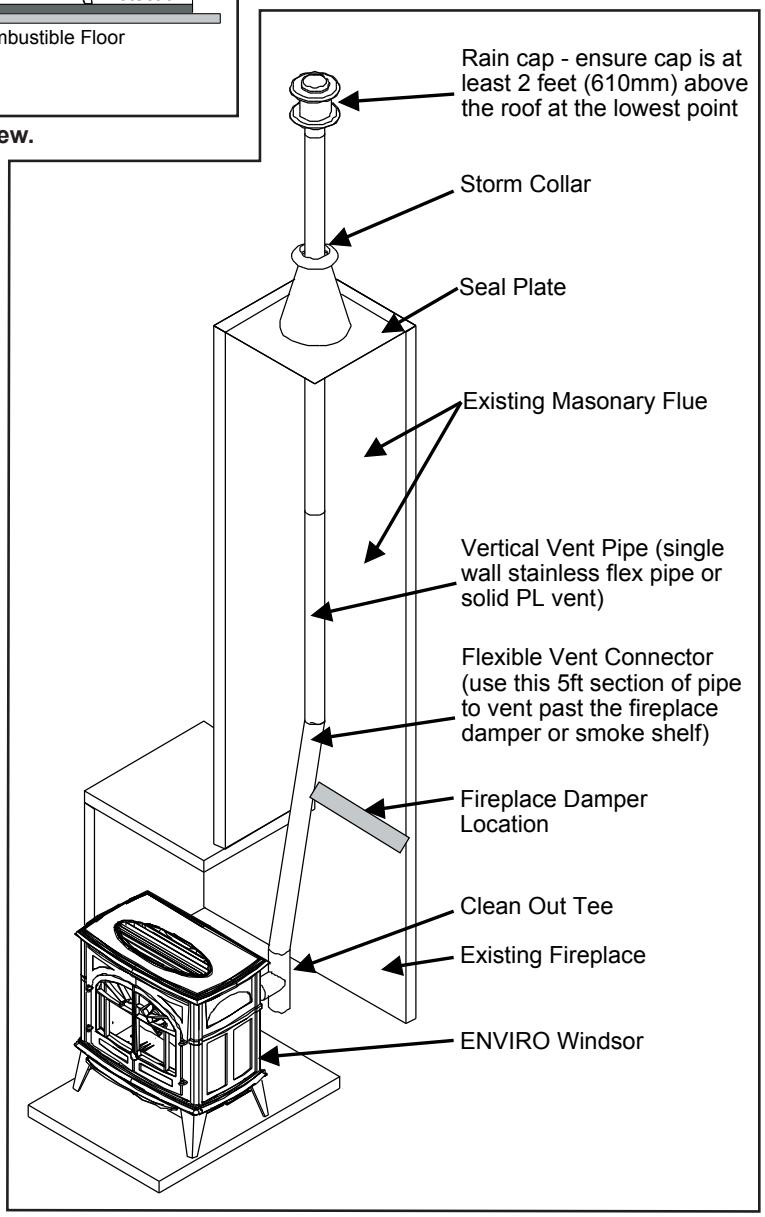

Figure 17: Hearth Mount - Over View.

Installation with Exterior Mounted Exhaust Blower:

The WINDSOR can be equipped with an externally mounted exhaust blower (PART #50-492). This optional kit will include all components necessary to install the exhaust blower on any external vertical wall surface.

Choose a location for your stove that meets the requirements stated in this manual and allows installation with the least amount of interference to house framing, plumbing, wiring, etc.

Included in the exterior mounted exhaust blower kit are:
- 1 - Exhaust blower housing box.
- 1 - Blower cover plate.
- 1 - Hardware bag

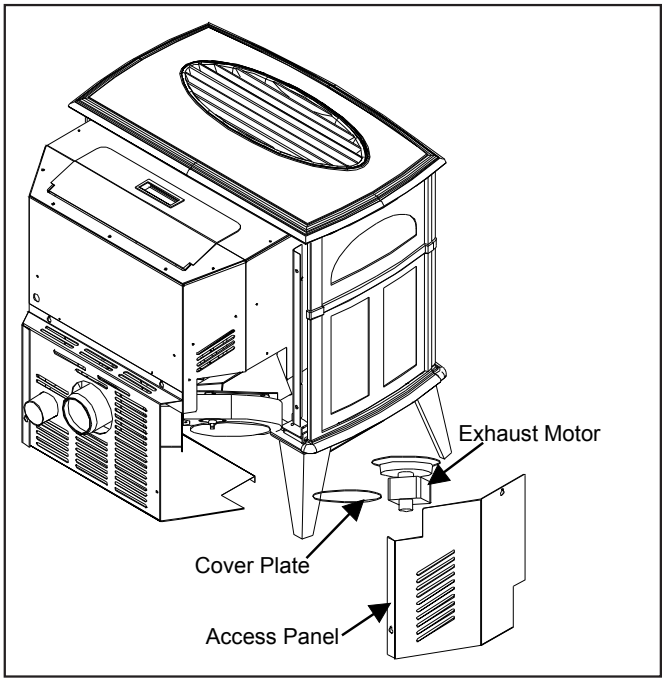

Figure 18: Removing Exhaust Blower.

1. Open the left side of the unit and disconnect the exhaust blower wires from the harness. Remove the exhaust blower by undoing the six (6) ¼ hex head sheet metal screws that fasten the blower to the housing.
2. Remove the back grill from the exterior exhaust vent housing and remove the round cover plate installed on the blower housing.
3. Install the round cover plate over the gasketed opening in the stove where the exhaust motor was removed from.
4. Install the exhaust blower motor in the Exterior Vent Housing Box onto the exhaust blower housing.
5. Follow the procedures for Installation - Horizontal Exhaust Through Wall Installation. Place the unit in the desired location. Cut the hole in the wall at the desired location. Install a wall thimble.
6. Drill holes in the wall thimble in the corresponding locations for wire and fresh air if needed. Install wire clamps and feed wire through the hole in the thimble into the house. Tighten clamp on wire and attach green ground wire (at the symbol) with the screw and star washer provided.
7. Attach a short or an adjustable section of 3" of double wall pellet vent through the wall thimble to the stove. Seal all joints with silicone. Maintain clearances to combustibles.
8. Apply silicone to the pipe in the Exhaust Box, slide the pipe into the exhaust vent. Mount the Exhaust Box to the house. Reinstall the back grill on the Exterior Vent Housing Box. Apply normal venting practices when installing the vertical vent pipe.

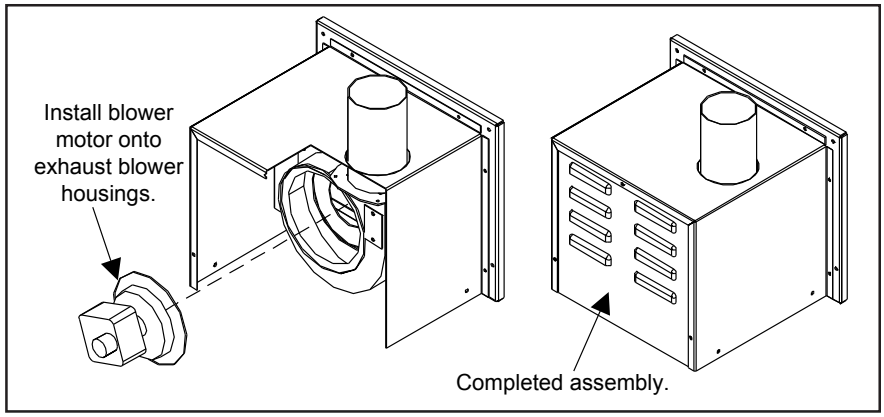

Figure 19: Exterior Exhaust Blower.

9. Connect the wires in the stove. Re-install the left side access cover to the stove and the back grill on the exterior vent housing.
10. Set the Slider Damper as described in the Installation - Slider/Damper Setting" section.

NOTE:

Ensure that all vent connections are installed by placing three (3) screws evenly spaced and a small bead of high temperature silicone at each chimney connection. Also ensure that all vertical vent sections are properly supported and that all clearances to combustibles are maintained in accordance with the vent

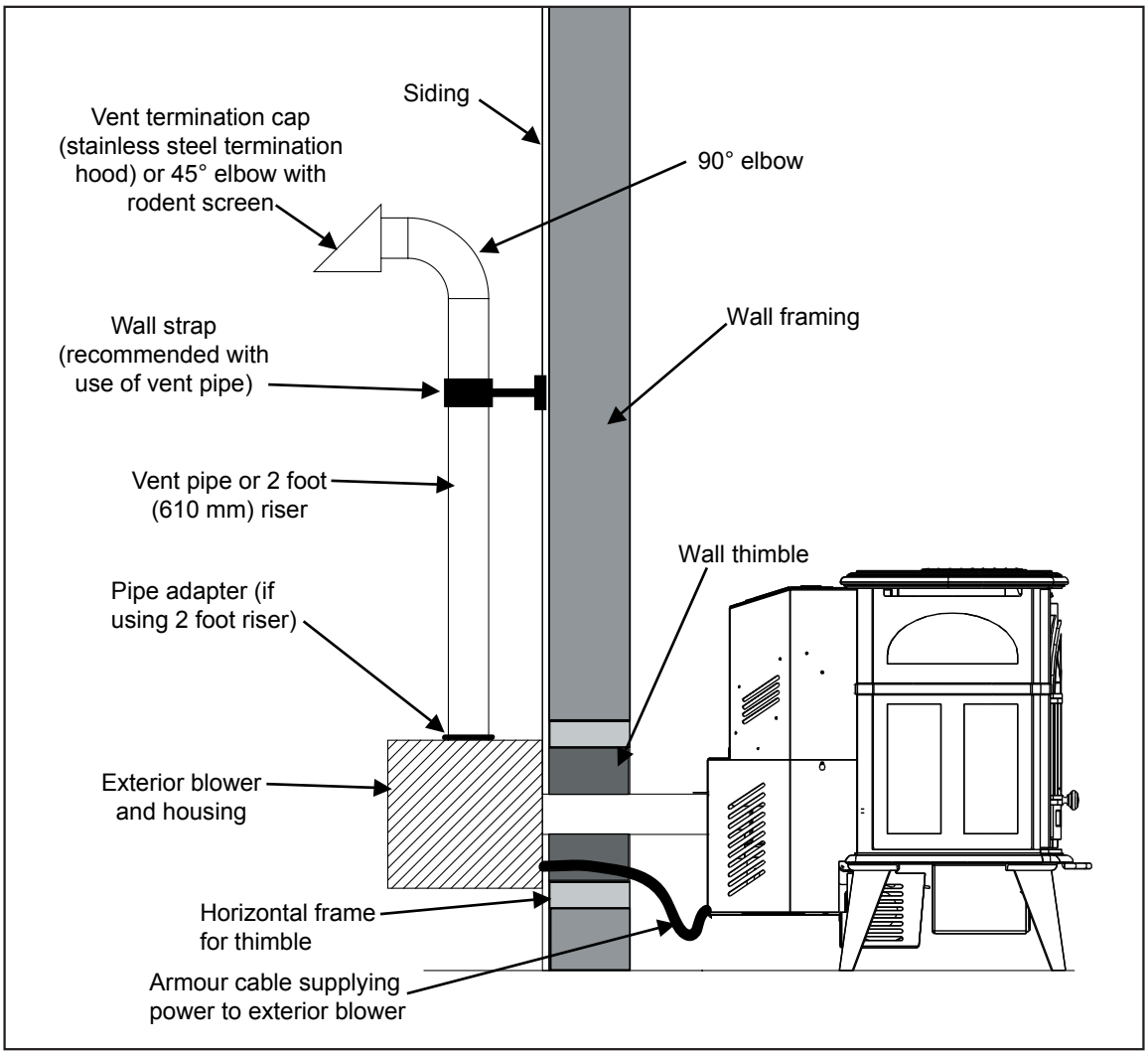

Figure 20: Exhaust Blower Installation; Horizontal Termination.

TO SUPPLY POWER TO THE EXHAUST BLOWER:

Install an amour coated electrical cable from the exhaust blower housing, through the wall thimble, and attach to the pre-drilled hole in the left hand rear hopper pillar. Hook up to wires from the wiring harness for the exhaust blower. All electrical connections must be in accordance with local code requirements (see Wiring Diagram).

Through Wall Vertical Installation With Exhaust Blower:

Refer to Installation - Installation with Exterior Mounted Exhaust Blower and Installation - Outside Vertical Installations. Ensure that vent pipe is properly secured to wall using wall straps. Maintain clearances to combustibles on vent pipe as well as unit.

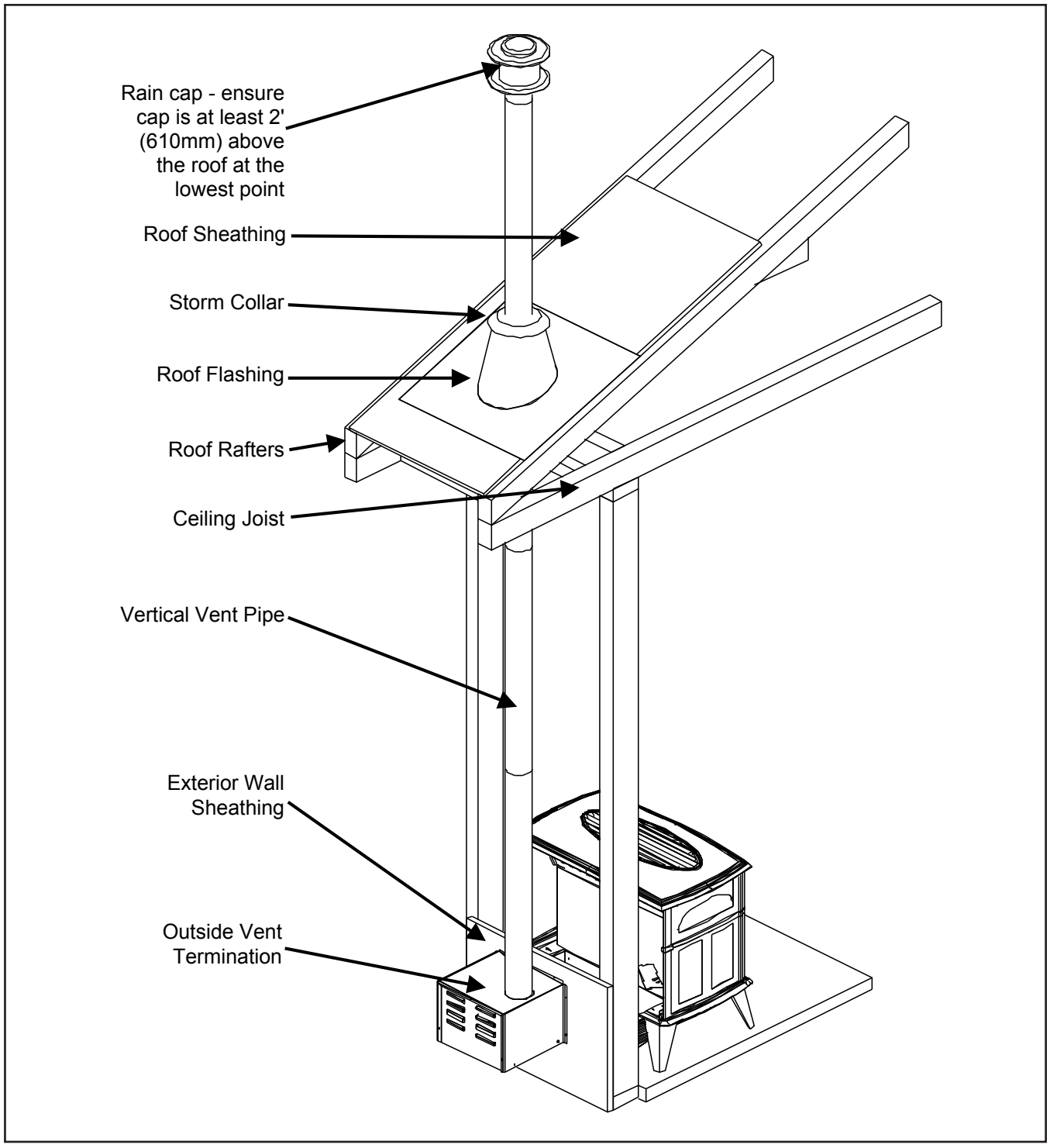

Figure 21: Exhaust Blower Installation; Vertical Termination.

Thermostat Installation:

1. Install the wall thermostat in a location that is not to close too the unit but will effectively heat the desired area.
2. Install a 12 or 24 Volt Thermostat using an 18 x 2 gauge wire from the unit to the thermostat.

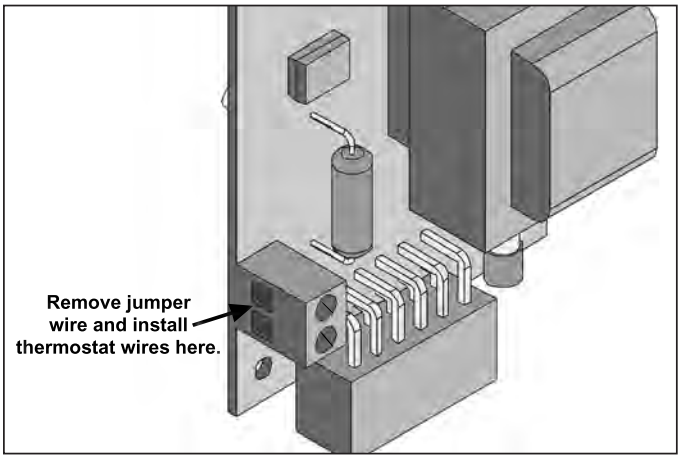

Figure 22: Thermostat wire placement.

If the unit has been placed in the HI / LOW mode, the unit will be taken to a low or idle setting when the thermostat is not calling for heat. When the thermostat calls for heat, the unit will go to the setting that is displayed on the control board Heat Indicator. If the heating load is not great enough when the stove is on low, the high limit switch will turn the stove off and the switch will have to be manually reset. To reset the high limit switch, remove the right cabinet side. The switch is found behind the control panel. Avoid setting off the high limit switch.

Slider/Damper Setting:

THE SLIDER / DAMPER MUST BE SET AT TIME OF INSTALLATION, IT IS USED TO REGULATE THE AIRFLOW THROUGH THE PELLET STOVE.

A Qualified Service Technician or Installer must set the Slider Damper.

The slider damper should be set only on a hot stove (operating for thirty (30) minutes or more) by placing a Magnahelic Pressure Gauge in the firebox (test port is located in the center of the stove just below the door opening). Set the slider damper so that the pressure reads **0.18" to 0.20" W.C. (44.8 to 49.8 Pa). Some fuels may require higher or lower settings.** The pressure readings are taken through a hole in the front of the firebox under the door, using a Magnehelic Gauge.

The slider damper is located behind the left cab side. Undo the two (2) T-20 torx screws that hold the inspection cover on the left side and remove.

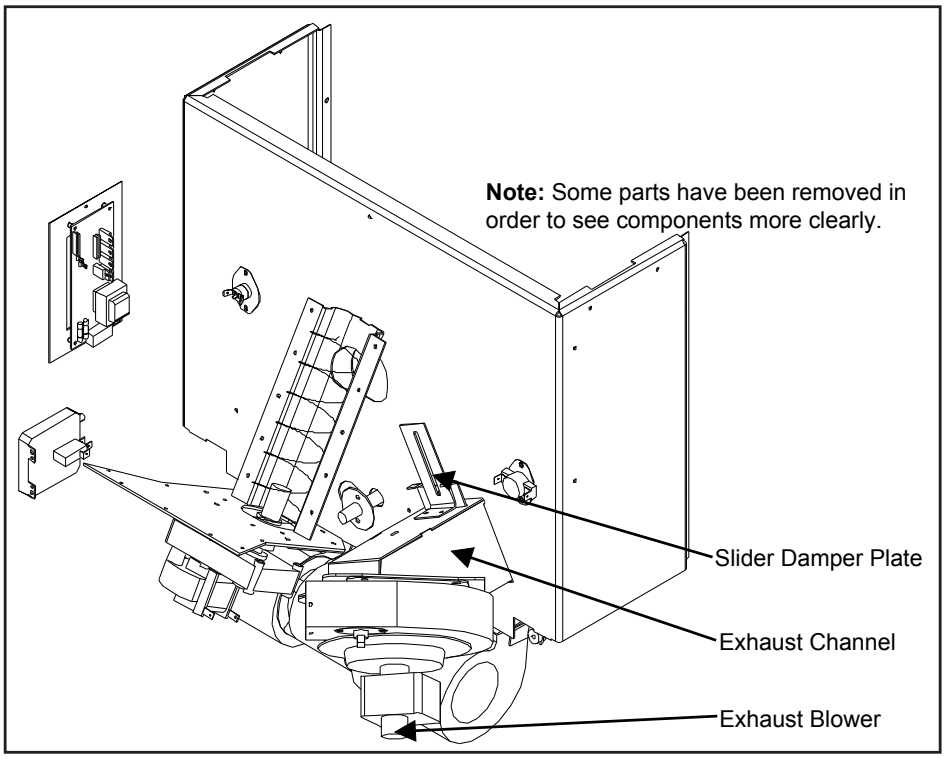

Figure 23: Slider / Damper

The combustion exhaust blower is a variable speed blower controlled by the heat output button. This blower will decrease the vacuum pressure inside the stove and as the heat output button is turned down. The vacuum pressure inside the firebox will increase as the combustion exhaust blower increases in speed (higher heat output setting).

• If the fire should happen to go out and the heat output indicator has been set on the lowest setting, the Slider Damper should be pushed in slightly, decreasing the air in the firebox.

• If, after long periods of burning, the fire builds up and overflows the burn pot or there is a build up of clinkers, this would be a sign that the pellet quality is poor, this requires more primary air, the slider damper must be pulled out to compensate. Pulling the slider damper out gives the fire more air.

The easiest way to make sure that an efficient flame is achieved is to understand the characteristics of the fire.

- A tall, lazy flame with dark orange tips requires more air – Open slider (pull out) slightly.
- A short, brisk flame, like a blowtorch, has too much air – Close slider (push in) slightly.
- If the flame is in the middle of these two characteristics with a bright yellow/orange, active flame with no black tips then the air is set for proper operation.



Figure 24: Efficient Flame.

SPECIAL NOTES:

Pellet quality is a major factor in how the pellet stove will operate. If the pellets have a high moisture content or ash content the fire will be less efficient and has a higher possibility of the fire building up and creating clinkers (hard ash build-up). If this happens, pull the Slider Damper out slightly to increase the air flow to the fire.

Troubleshooting

DO NOT:

- Service the stove with wet hands. The stove is an electrical appliance, which may pose a shock hazard if handled improperly. Only qualified technicians should deal with possible internal electrical failures.
- Do not remove from the firebox any screws without penetrating oil lubrication.
- Hold the ON / OFF BUTTON down. This is a momentary contact switch and can be damaged if held down too long.

WHAT TO DO IF:

1. The stove will not start.
2. The stove will not operate when hot.
3. The exhaust blower will not function normally.
4. Light # 2 on Heat output bar flashing.
5. The auger motor will not function normally.
6. The 200 °F (93 °C) high limit temperature sensor has tripped.
7. The convection blower will not function normally.
8. Ignitor- the pellets will not light.
9. Control settings (Heat Level) has no effect on the fire.
10. The stove keeps going out.

***NOTE: All troubleshooting procedures should be carried out by qualified technicians or installers.**

1. The stove will not start.

✓Make sure the stove is plugged in and the wall outlet is supplying power.
✓Push the ON /OFF button. You may need to wait approximately 30 seconds for circuit board to initiate the stove is on.
✓If the control board has been placed in the on/off thermostat mode, then turn the thermostat up to call for heat.
✓Check the heat level indicator. - If the # 2 light is flashing refer to "4. Light # 2 on Heat output bar flashing.")
✓Check the fuse on the circuit board.
✓If the unit still does not start, contact your local service dealer for service.

2. The stove will not operate when hot.

✓Check the heat level indicator if a fire is not detected, or if the fire has gone out **the #3 light will flash** because the exhaust temperature sensor's contacts have opened.
✓Check the hopper for fuel.
✓Incorrect air damper setting. - Excessive air may consume the fire too quickly before the next drop of fuel, leaving completely unburned fuel in the burn pot liner. - Insufficient air will cause build up, further restricting the air flow through the burn pot liner. This in turn will cause the fuel to burn cold and very slowly. Fuel may build up and smother the fire. In this case clean the burn pot. **(Note: the unit may require a change to the vent system or installation of fresh air to correct air to fuel ratio problems).**
✓Combustion blower failure. - The combustion blower is not turning fast enough to generate the proper vacuum in the fire box. Visual check – is the blower motor turning.
✓Check the exhaust blower voltage across the blower wires (>=220V on #5 setting and >= 165V on #1 setting). – Replace the Circuit Board if the Voltage reading is less than 160V. with a line voltage >220V AC.

✓Check vacuum levels in the exhaust channel by bypassing the vacuum switch, then remove the vacuum hose from vacuum switch. Check exhaust vacuum readings by placing the open end of the vacuum hose on a Magnahelic Gauge (readings must be above 0.18" to 0.20" W.C. (44.8 to 49.8 Pa) on low fire). If the motor fails to reach a 0.10" W.C. readings, then replace the combustion blower.
✓Poor quality fuel – insufficient energy in the fuel to produce enough heat to keep the stove burning or operational.
✓Exhaust temperature sensor failure. – Bypass sensor located on exhaust blower if stove now operates properly, the unit may require cleaning or a new sensor. Contact your local dealer for service.
✓The burn pot liner may require cleaning. Build up in the burn pot will cause the unit to shut off.
✓Check the fuse on the circuit board.
✓Contact your local dealer for service.

3. The exhaust motor will not function normally.
✓Open the left side access panel; check all connections against the wiring diagram.
✓See "2. The stove will not operate when hot." Section.

4. Light # 2 on Heat output bar flashing
(The Vacuum Switch contacts have opened for more than 15 sec.)
✓Pinch, break or blockage in vacuum hose - check hose for pinch points or damage, replace or re-route as required. Blow out vacuum hose
✓Blocked hose barb on exhaust channel - use a paper clip to clean out hose barb or remove the vacuum hose from the vacuum switch and blow into the hose to remove blockage.
✓Blocked exhaust / venting system - have stove and venting cleaned and inspected.
✓Severe negative pressure in area where unit is installed - check the operation by opening a window, does this solve the problem? If it does, install fresh air intake to unit or room. Venting system may require vertical section to move termination into a low pressure zone.
✓Vacuum switch failure - bypass the vacuum switch, if this corrects the problem check for above problems before replacing the vacuum switch.
✓Damage to gray wires between circuit board and vacuum switch - inspect wires and connectors
✓Combustion blower failure - the combustion blower is not turning fast enough to generate the proper vacuum in the exhaust channel. Visual check; is the blower motor turning? Check the exhaust blower voltage across the blower wires (>=220V on #5 setting and >= 165V on #1 setting). – Replace the Circuit Board if the Voltage reading is less than 160V. with a line voltage >220V AC.
✓Check vacuum levels in the exhaust channel by bypassing the vacuum switch, then remove the Vacuum hose from Vacuum Switch. Check exhaust vacuum readings by placing the open end of the Vacuum Hose on a Magnahelic Gauge. (readings must be above .10" W.C. on low fire).
If the motor fails to reach a 0.10" W.C. readings, then replace the combustion blower
To reset Circuit Board after a trouble code - push the ON/OFF button

5. The auger motor will not function normally.
✓The burn pot liner may require cleaning. Build up in the burn pot will cause the unit to shut off.
✓Check for obstructions in the hopper system.
✓Ensure door is closed and ash pan is closed. The auger motor will stop if there is not enough vacuum in the stove.
✓Call your local dealer for service.
Auger light flashes but auger motor does not turn at all.

✓If the auger gear box does not turn but the motor's armature does try to spin then the auger is jammed. – Try to break apart jam by poking at the jam through the drop tube. If this fails then empty the hopper and remove the auger cover **remember to re-seal the cover after installation**
✓Check the fuse on the circuit board.

6. The 200 °F (93 °C) high limit temperature sensor has tripped.
✓Reset sensor and determine cause – was it convection blower failure or 160 °F (71 °C) temperature sensor failure? Bypass the 160 °F (71 °C) sensor, does the convection blower come on high? If no, replace the blower. If yes, replace sensor (located on the left side of the firewall).
✓Check the fuse on the circuit board.

7. The convection blower will not function normally.
✓Clean all grill openings at the back and below unit .
✓Press the fan button; does the fan come on? Press again to verify that the blower turns on; if, not contact your local dealer for service.

8. Ignitor- the pellets will not light.
(Everything else in the stove operates but the ignitor will not light the pellets.)
✓Make sure the burn pot liner is up tight and square to the ignitor tube by pushing the burn pot back against the ignitor tube.
✓Check to see if the exhaust blower is operating. If not, contact your local dealer for service.
✓Check the fuse on the circuit board.
NOTE: The ignitor should be bright orange in color. If not replace the ignitor.

9. Control settings (Heat Level) has no effect on the fire.
✓Note: If the system light is flashing the control board has complete control of the unit. When the units system light becomes solid then control of the unit is given back to the operator.
✓If there is no control of the heat level button make sure the thermostat is calling for heat.
✓Call your local dealer for service.

10. The stove keeps going out.
a) If the stove goes out and leaves fresh unburned pellets or cigarette-like ashes in the burn pot liner, the fire is going out before the stove shuts off.
✓Check to see that the slider / damper is in the correct position.
✓Turn the heat level up slightly (poor quality pellets will require slightly higher settings).
✓Set the auger trim till the #1 and #5 lights are illuminated.
b) If the stove goes out and there are partially burned pellets left in the burn pot liner, the stove has shut down due to a lack of air, exhaust temperature, or power failure.
✓Adjust the slider / damper.
✓Check to see if the stove needs a more complete cleaning.
✓Turn the heat level up slightly (poor quality pellets will require slightly higher settings).
✓Did the power go out?
✓Contact your local dealer for service.

Wiring Diagram

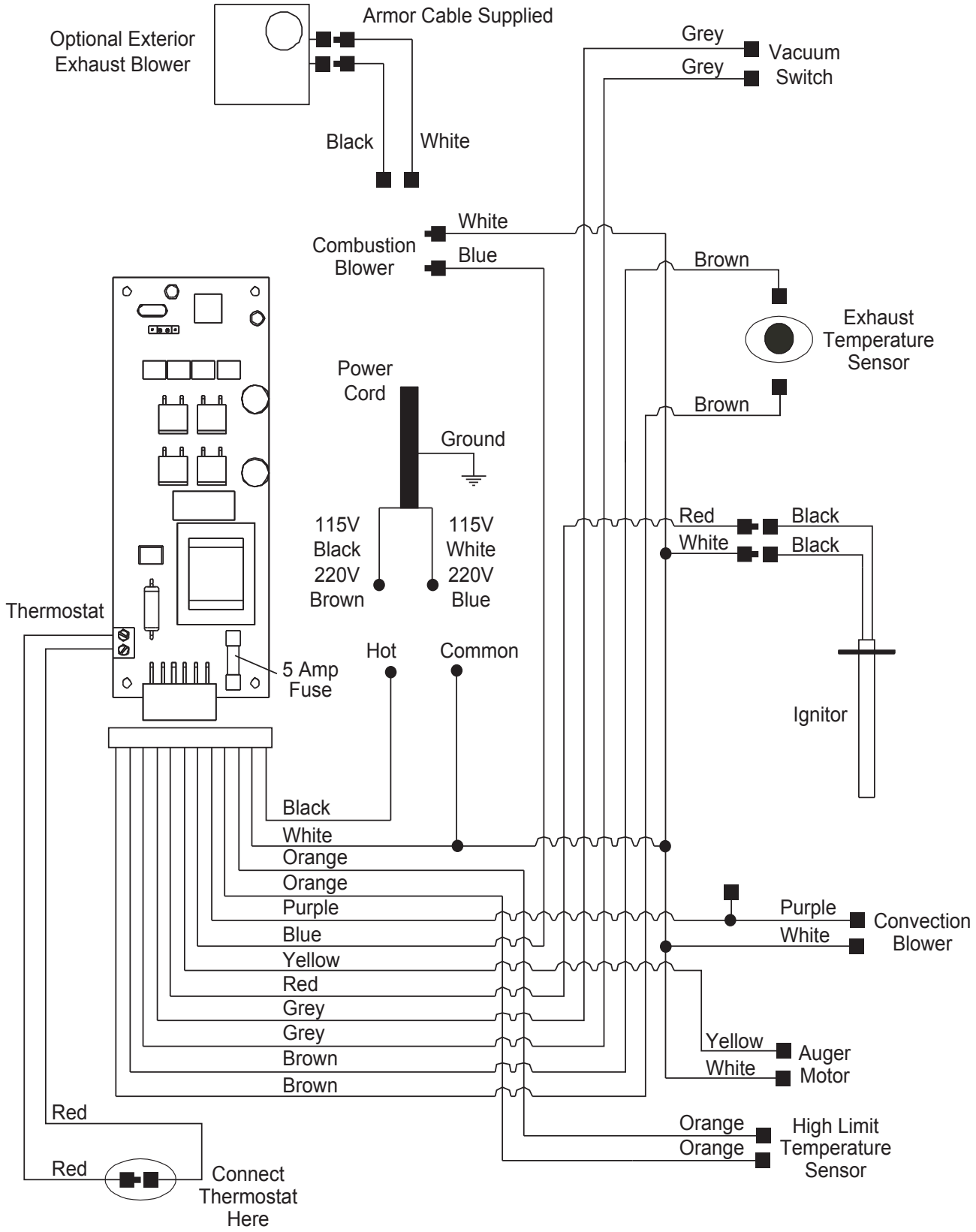

Parts List - Components

Reference Number	Description	Part Number
1	120 °F (49 °C) Ceramic Fan Temperature Sensor	EC-001
2	Auger Motor - 220V	EF-001-220V
3	Fan Temp Sensor 160 °F (71 °C)	EF-013
4	High Limit Temp Sensor 200 °F (93 °C) Manual Reset	EF-016
5	Vacuum Switch - 220V	EF-017-220V
	Silicone Hose	EF-018
	Aluminum Hose Barb	EF-019
6	Ignition Burn Pot	EF-021
	CE Power Cord - 220V	EF-054-220V
	External Exhaust Back	EF5-143
	External Exhaust Box	EF5-144
	External Exhaust Bottom	EF5-145
	45° Exhaust Adaptor	EF5-146
	60° Exterior Exhaust Adaptor	50-096
	Door Screen	50-177
7	Slider Damper with bolt	50-180
8	Heat Exchanger Rod	50-181
9	Cast Brick Panel - Center	50-182
10	Cast Brick Panel - Left	50-183
11	Cast Brick Panel - Right	50-184
12	Brick Panel Retainers (set of 2)	50-185
13	Inner Door Complete with Glass & Tape	50-186
14	Glass With Tape	50-187
	Inner Door Only - Painted	50-188
15	Inner Door Handle	50-189
16	Door Hinge Bracket	50-190
17	Ash Pan With Painted Knob	50-191
18	Hopper Lid	50-193
19	Back grill	50-194
20	Access Panel - Left	50-195
21	Access Panel - Right	50-196

Parts List - Components

Reference Number	Description	Part Number
22	Rear Casting Mounts - Right & Left	50-197
23	Bottom Casting Mounts - Right & Left	50-198
24	Front Casting Mounts - Right & Left	50-199
25	Door Knob - Brushed Nickel	50-262
	Circuit Board Stand Offs	50-331
26	Air Deflector	50-363
	Hose Barb Shield	50-472
27	Stainless Steel Burn Pot Liner - Standard	50-474
27	Stainless Steel Burn Pot Liner - High Ash	50-587
	External Exhaust Kit (80mm pipe)	50-492
28	Convection Blower - 220V	50-515
29	Flush Handle for Hopper Lid	50-523
	Self Adhesive Vinyl Spacers (set of 4)	50-607
	Dual bulb door gasket - 10 ft (3.05m)	50-634
30	400 Watt Ignitor - 220V	50-646
	Auger Motor Mount	50-687
	Auger Plate with bushing	50-688
	Auger Mounting Hardware	50-689
31	Shafted Auger With Paddles - 220 V	50-692
	Hinge Pin - Silver	50-750
	Oval Ceramic Gasket	50-766
32	Circuit Board 5 Amp Fuses - 220V (Pair)	50-834
	Windsor DIN Owner's Manual - 220V	50-835
	Windsor DIN Technical Manual - 220V	50-836
	Exhaust Starter Tube 80mm x 2½" Long	50-898
33	Combustion/ Exhaust Blower - 220V	50-900
	Door Bolt, Hardened Bushing & Nut	50-995
34	Control Panel with Decal	50-1481
34	Control Panel Decal	50-1482
35	Circuit Board with Thermostat Switch - 220V	50-1552

Parts List - Cast

Reference Number	Description	Part Number
36	Cast Ash Shelf - Painted	50-192
36	Cast Ash Shelf - Antique White	50-209
36	Cast Ash Shelf - Diamond Black	50-210
36	Cast Ash Shelf - Inferno Red	50-211
36	Cast Ash Shelf - Pearl Grey	50-212
36	Cast Ash Shelf - Wedgewood Blue	50-213
36	Cast Ash Shelf - Westport Green	50-214
36	Cast Ash Shelf - Antique Chestnut	50-866
37	Cast Front Complete (Doors & Ash Shelf) - Painted	50-202
37	Cast Front Complete (Doors & Ash Shelf) - Antique White	50-227
37	Cast Front Complete (Doors & Ash Shelf) - Diamond Black	50-228
37	Cast Front Complete (Doors & Ash Shelf) - Inferno Red	50-229
37	Cast Front Complete (Doors & Ash Shelf) - Pearl Grey	50-230
37	Cast Front Complete (Doors & Ash Shelf) - Wedgewood Blue	50-231
37	Cast Front Complete (Doors & Ash Shelf) - Westport Green	50-232
37	Cast Front Complete (Doors & Ash Shelf) - Antique Chestnut	50-861
38	Cast Side Left - Painted	50-203
38	Cast Side Left - Antique White	50-233
38	Cast Side Left - Diamond Black	50-234
38	Cast Side Left - Inferno Red	50-235
38	Cast Side Left - Pearl Grey	50-236
38	Cast Side Left - Wedgewood Blue	50-237
38	Cast Side Left - Westport Green	50-238
38	Cast Side Left - Antique Chestnut	50-862
39	Cast Side Right - Painted	50-204
39	Cast Side Right - Antique White	50-239
39	Cast Side Right - Diamond Black	50-240
39	Cast Side Right - Inferno Red	50-241

Parts List - Cast

Reference Number	Description	Part Number
39	Cast Side Right - Pearl Grey	50-242
39	Cast Side Right - Wedgewood Blue	50-243
39	Cast Side Right - Westport Green	50-244
39	Cast Side Right - Antique Chestnut	50-863
40	Cast Grate - Painted	50-205
40	Cast Grate - Antique White	50-245
40	Cast Grate - Diamond Black	50-246
40	Cast Grate - Inferno Red	50-247
40	Cast Grate - Pearl Grey	50-248
40	Cast Grate - Wedgewood Blue	50-249
40	Cast Grate - Westport Green	50-250
40	Cast Grate - Antique Chestnut	50-864
41	Cast Top Only (No Grate) - Painted	50-206
41	Cast Top Only (No Grate) - Antique White	50-251
41	Cast Top Only (No Grate) - Diamond Black	50-252
41	Cast Top Only (No Grate) - Inferno Red	50-253
41	Cast Top Only (No Grate) - Pearl Grey	50-254
41	Cast Top Only (No Grate) - Wedgewood Blue	50-256
41	Cast Top Only (No Grate) - Westport Green	50-257
41	Cast Top Only (No Grate) - Antique Chestnut	50-865
	Complete Cast Body - Painted	50-576
	Complete Cast Body - Antique White	50-577
	Complete Cast Body - Diamond Black	50-578
	Complete Cast Body - Inferno Red	50-579
	Complete Cast Body - Pearl Grey	50-580
	Complete Cast Body - Wedgewood Blue	50-581
	Complete Cast Body - Westport Green	50-582
	Complete Cast Body - Antique Chestnut	50-867

Parts Diagram - Components

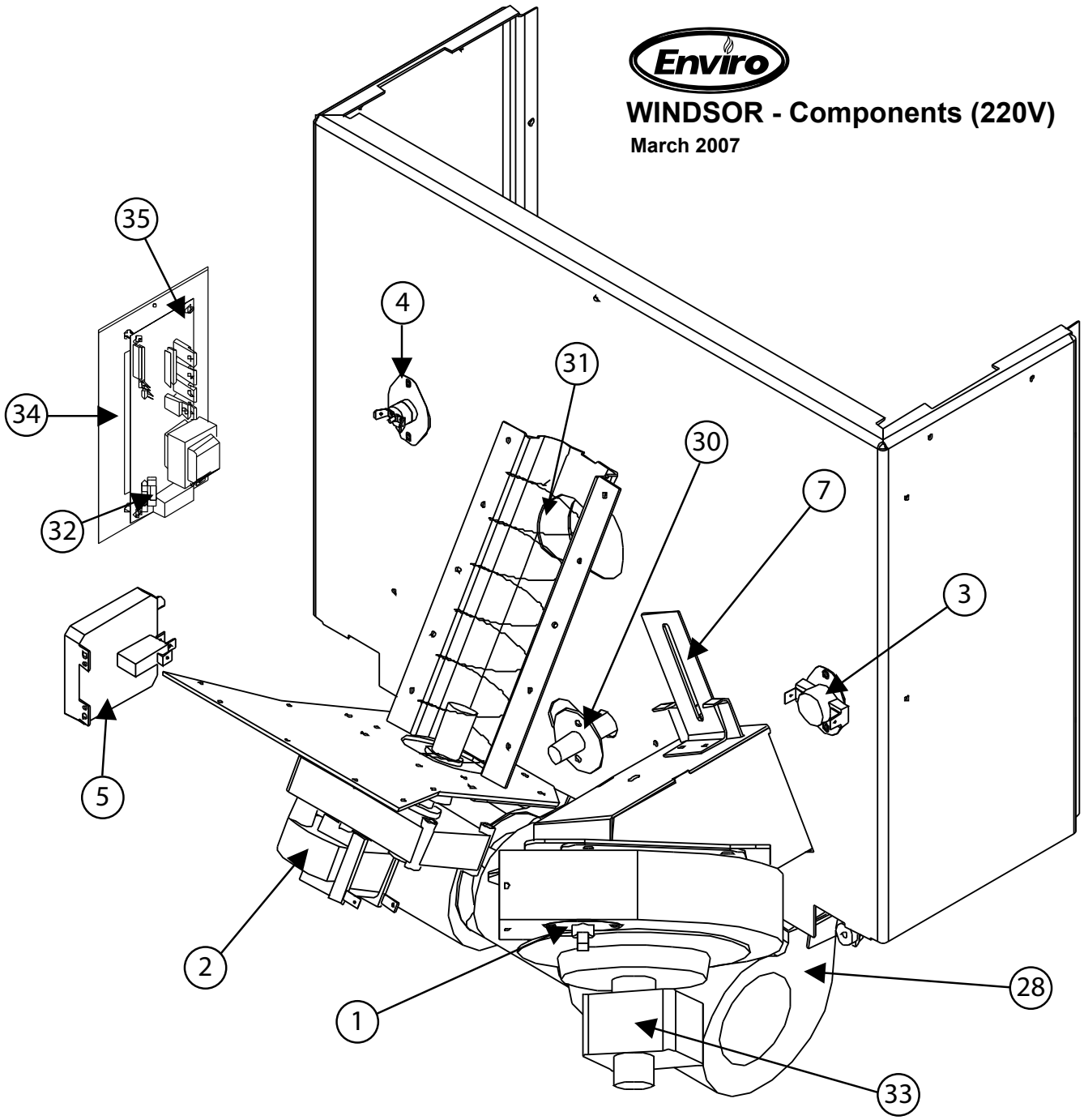

Parts Diagram - Steel & Cast

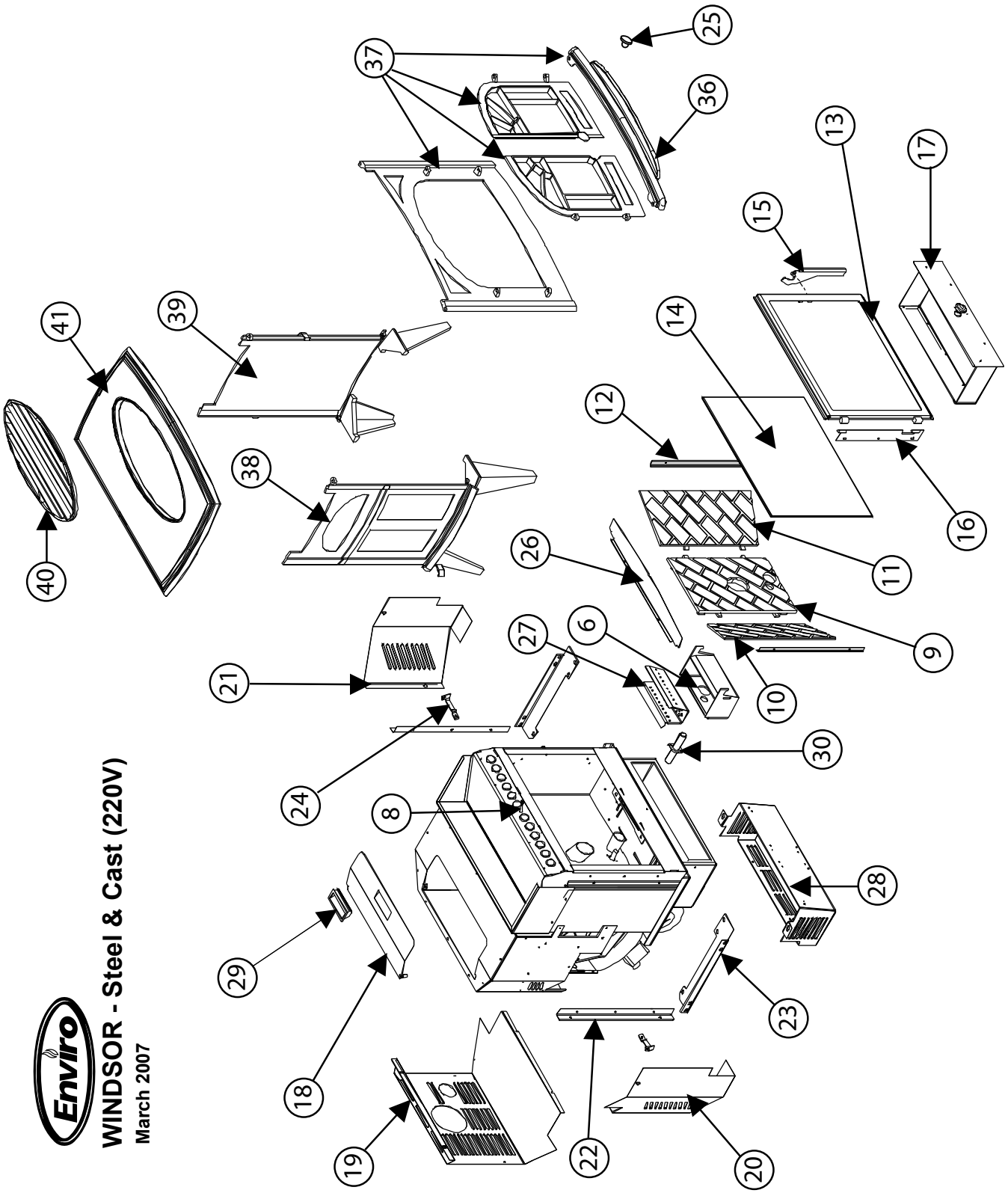

WINDSOR - Steel & Cast (220V)

March 2007

Warranty

Sherwood Industries Ltd. is the manufacturer of the Enviro line of heating products. At Sherwood Industries, our commitment to the highest level of quality and customer service is the most important thing we do. Each Enviro stove is built on a tradition of using only the finest materials and is backed by our Exclusive Lifetime Limited Warranty to the original purchaser. With Enviro, you're not just buying a stove, you're buying a company with years of unequalled performance and quality.

Limited Lifetime Warranty:

Under this warranty, Sherwood Industries Ltd. covers the fireplace or stove body and accessories against defects in materials and workmanship, for part repair or replacement for the first seven (7) years and limited labour for the first two (2) years to the original purchaser. This Warranty covers: Firebox, Heat Exchanger, Burn Pot, Firebox Panels, Ceramic Glass, Pedestals, Panels, Legs, Log Sets and Door Assembly. Please see the exclusions and limitation section below as certain restrictions and exclusions apply to this warranty.

Limited Three (3) Year Warranty

Under this warranty, Sherwood Industries Ltd. covers the Burn Pot Liner against defects in materials and workmanship, for part repair or replacement for the first three (3) years and limited labour for the first two (2) years to the original purchaser. Please see the exclusions and limitation section below as certain restrictions and exclusions apply to this warranty.

Limited Two (2) Year Warranty:

Under this warranty, Sherwood Industries Ltd. covers: Ignitor, Auger Motor, Circuit Board, Timers, Temp Sensors, Blowers, Vacuum Switch and Wire Harness, against defects in materials and workmanship, for part repair or replacement for the first two (2) years and limited labour for the first two (2) years to the original purchaser. Please see the exclusions and limitation section below as certain restrictions and exclusions apply to this warranty.

Limited One (1) Year Warranty:

Under this warranty, Sherwood Industries Ltd. covers all exterior surface finishes against defects in materials and workmanship, for part repair or replacement and limited labour for the first (1) year to the original purchaser. Please see the exclusions and limitation section below as certain restrictions and exclusions apply to this warranty.

Here is how our Warranty works

If you have any concerns with your Enviro product please contact the dealer where you purchased the fireplace or stove. Your dealer shall make all claims under this warranty in writing.

To the Dealer

When filling out a warranty claim please complete the following information on an official warranty claim form:

Customer information: Name, address and telephone number of purchaser and date of purchase.

Dealer information: Date of installation, name of installer and dealer, serial number of the appliance, nature of complaint, defects or malfunction, description and part numbers of any parts replaced.

To the Distributor

Sign and verify that work and information are correct.

Warranty

Exclusions and Limitations:

1. This Warranty does not cover tarnish, discoloration or wear on the plating or paint.
2. This Warranty excludes wear and tear or breakage caused by cleaning, moving or service on log set.
3. A qualified installer must install this stove or fireplace. This Limited Warranty covers defects in materials and workmanship only if the product has been installed in accordance with local building and fire codes; in their absence, refer to the owner's manual. If the product is damaged or broken as a result of any alteration, willful abuse, mishandling, accident, neglect, or misuse of the product, the Limited Warranty does not apply.
4. The stove must be operated and maintained at all times in accordance with the instructions in the Owner's Manual. If the unit shows signs of neglect or misuse, it is not covered under the terms of this Warranty policy. Performance problems due to operator error will not be covered by the Limited Warranty policy.
5. As this is a heating appliance some changes in colour of surface finishes may occur. This is not a flaw and as such is not covered under this warranty.
6. Some minor expansion, contraction, or movement of certain parts and resulting noise, is normal and not a defect and, therefore, is not covered under this Limited Warranty.
7. Misuse includes over-firing. Over-firing this appliance can cause serious damage and will nullify the Limited Warranty.
8. The Limited Warranty will cover glass thermal breakage only and will not cover misuse of the stove glass, including but not limited to glass that is struck, has surface contaminates or has had harsh or abrasive cleaners used on it.
9. This warranty does not cover products made or provided by other manufacturers and used in conjunction with the operation of this stove without prior authorization from Sherwood Industries Ltd. The use of such products may nullify the Limited Warranty on this stove. If unsure as to the extent of this Limited Warranty, contact your authorized Enviro dealer before installation.
10. Sherwood Industries Ltd. will not be responsible for inadequate performance caused by environmental conditions.
11. The Limited Warranty does not cover installation and operational related problems such as spillage caused by environmental conditions. Environmental conditions include but are not limited to nearby trees, buildings, roof tops, wind, hills, mountains, inadequate venting or ventilation, excessive offsets, negative air pressures or other influences caused by mechanical systems such as furnaces, fans, clothes dryers etc.
12. The Limited Warranty is void if:
    a) The stove has been operated in atmospheres contaminated by chlorine, fluorine or other damaging chemicals.
    b) The stove is subject to submersion in water or prolonged periods of dampness or condensation.
    c) Any damage to the unit, combustion chamber or other components due to water, or weather damage which is the result of, but not limited to, improper chimney/venting installation.
    c) Salt air in coastal areas or high humidity can be corrosive to the finish; these environments can cause rusting. Damage caused by salt air or high humidity is not covered by the Limited Warranty.
13. Exclusions to the Limited Warranty include: injury, loss of use, damage, failure to function due to accident, negligence, misuse, improper installation, alteration or adjustment of the manufacturer's settings of components, lack of proper and regular maintenance, alteration, or act of God.
14. The Limited Warranty does not cover damage caused to the fireplace or stove while in transit. If this occurs, do not operate the stove and contact your courier and/or dealer.
15. The Limited Warranty does not extend to or include firebox paint, door or glass gaskets with damage caused by normal wear and tear, or exterior paint discoloration or chipping, worn gaskets, etc.
16. The Limited Warranty does not include damage to the unit caused by abuse, improper installation,

or modification of the unit.

17. Damage to plated surfaces caused by fingerprints, scratches, melted items, or other external scores and residues left on the plated surfaces from the use of abrasive cleaners or polishes is not covered in this warranty.
18. The Limited Warranty does not cover tarnish, discoloration or wear on the plated surfaces.
19. The paint on the Metal Brick Liner may peel. This is due to the extreme conditions applied to the paint during normal usage. It is not a flaw and is not covered under warranty.
20. Sherwood Industries Ltd. is free of liability for any damages caused by the fireplace or stove, as well as inconvenience expenses and materials. The Limited Warranty does not cover incidental or consequential damages.
21. The Limited Warranty does not cover any loss or damage incurred by the use or removal of any component or apparatus to or from the Enviro fireplace or stove without the express written permission of Sherwood Industries Ltd. and bearing a Sherwood Industries Ltd. label of approval.
22. Any statement or representation of Enviro products and their performance contained in Enviro advertising, packaging literature, or printed material is not part of the Limited Warranty.
23. The Limited Warranty is automatically voided if the fireplace or stove's serial number has been removed or altered in any way. If the stove is used for commercial purposes, it is excluded from the Limited Warranty.
24. No dealer, distributor, or similar person has the authority to represent or warrant Enviro products beyond the terms contained within the Limited Warranty. Sherwood Industries Ltd. assumes no liability for such warranties or representations.
25. Sherwood Industries Ltd. will not cover the cost of the removal or re-installation of the stove, hearth, facing, mantels, venting or other components.
26. Labour to replace or repair items under this Limited Warranty will be covered per our warranty service fee reimbursement schedule. Labour rates are set per component and as such total labour costs may not be covered.
27. Sherwood Industries Ltd. is not liable for freight or labour on any stove replaced in-field and is not liable for travel costs for service work. In the event of in-home repair work, the customer will pay any in-home travel fees or service charges required by the Authorized Dealer.
28. At no time will Sherwood Industries Ltd. be liable for any consequential damages which exceed the purchase price of the unit. Sherwood Industries Ltd. has no obligation to enhance or modify any stove once manufactured (example: as a stove evolves, field modifications or upgrades will not be performed).
29. This Limited Warranty is applicable only to the original purchaser and it is non-transferable.
30. This warranty only covers Enviro products that are purchased through an authorized Enviro dealer.
31. If for any reason any section of the Limited Warranty is declared invalid, the balance of the warranty remains in effect and all other clauses shall remain in effect.
32. The Limited Warranty is the only warranty supplied by Sherwood Industries Ltd., the manufacturer of the stove. All other warranties, whether express or implied, are hereby expressly disclaimed and purchaser's recourse is expressly limited to the Limited Warranty.
33. Sherwood Industries Ltd. and its employees or representatives will not assume any damages, either directly or indirectly, caused by improper usage, operation, installation, servicing or maintenance of this stove.
34. Sherwood Industries Ltd. reserves the right to make changes without notice. Please complete and mail the warranty registration card and have the installer fill in the installation data sheet in the back of the manual for warranty and future reference.
35. Sherwood Industries Ltd. is responsible for stocking parts for a maximum of seven (7) years after discontinuing the manufacture or incorporation of the item into its products. An exception to this would be if an OEM supplier is not able to supply a part.

Installation Data Sheet

The following information must be recorded by the installer for warranty purposes and future reference.

NAME OF OWNER:

_____

ADDRESS:

_____

_____

_____

PHONE:_____

NAME OF DEALER:

_____

ADDRESS:

_____

_____

_____

PHONE:_____

MODEL:_____

SERIAL NUMBER:_____

DATE OF PURCHASE: _____ (dd/mm/yyyy)

DATE OF INSTALLATION:_____(dd/mm/yyyy)

MAGNEHELIC AT INSTALL:_____

INSTALLER'S SIGNATURE:

_____

NAME OF INSTALLER:

_____

ADDRESS:

_____

_____

_____

PHONE:_____

MANUFACTURED BY:
SHERWOOD INDUSTRIES LTD.
6782 OLDFIELD RD. SAANICHTON, BC, CANADA V8M 2A3
www.envirofire.biz
March 9, 2007
C-11272