SHERWOOD INDUSTRIES IS AN ENVIRONMENTALLY RESPONSIBLE COMPANY. THIS MANUAL IS PRINTED ON RECYCLED PAPER.

PLEASE KEEP THESE INSTRUCTIONS FOR FUTURE REFERENCE

Enviro

Cara

BY: SHERWOOD INDUSTRIES LTD

OWNER'S MANUAL

INSTALLER:
Leave this manual with the appliance.

CONSUMER:
Retain this manual for future reference.



FOR YOUR SAFETY: Do not store or use gasoline or other flammable vapours and liquids in the vicinity of this or any other appliance.

WHAT TO DO IF YOU SMELL GAS

- **Open windows/extinguish any open flame.**
- **Do not try to light any appliance.**
- **Do not touch any electrical switch or use any phone in your building.**
- **Immediately call your gas supplier from a neighbour's phone. Follow the gas supplier's instructions.**
- **If you cannot reach your gas supplier, call the fire department.**

This appliance may be installed in an after-market permanently located, manufactured (mobile) home, where not prohibited by local codes. This appliance is only for use with the type of gas indicated on the rating plate. This appliance is not convertible for use with other gases, unless a certified kit is used.

WARNING: If the information in this manual is not followed exactly, a fire or explosion may result causing property damage, personal injury or loss of life. Installation and service must be performed by a qualified installer, service agency or the gas supplier.

INTERTEK Warnock Hersey C US

Massachusetts installations (Warning): This product must be installed by a licensed plumber or gas fitter when installed within the Commonwealth of Massachusetts. Other Massachusetts code requirements: Flexible connector must not be longer than 36in., a shut off valve must be installed; only direct vent sealed combustion products are approved for bedrooms/bathrooms. A carbon monoxide detector is required in all rooms containing gas fired direct vent appliances. The fireplace damper must be removed or welded in the open position prior to installation of a fireplace insert.

Safety Precautions

FOR SAFE INSTALLATION AND OPERATION OF YOUR "ENVIRO" HEATER, PLEASE CAREFULLY READ THE FOLLOWING INFORMATION:

- All ENVIRO gas-fired appliances must be installed in accordance with their instructions. Carefully read all the instructions in this manual first. Consult the building authority having jurisdiction to determine the need for a permit prior to commencing the installation.
- **NOTE:** Failure to follow these instructions could cause a malfunction of the fireplace, which could result in death, serious bodily injury, and/or property damage.
- Failure to follow these instructions may also void your fire insurance and/or warranty.

GENERAL

- Installation and repair should be done by a qualified service person. The appliance should be inspected before the first use and, at least, annually by a qualified service person. More frequent cleaning may be required due to excessive lint from carpeting, bedding material, etc. It is imperative the control compartments, burners and circulating air passageways of the appliance be kept clean.
- Due to high temperatures, the appliance should be located out of high traffic areas and away from furniture and draperies.

Children and adults should be alerted to the hazards of high surface temperatures and should stay away to avoid burn or clothing ignition.

- Young children should be carefully supervised when in the same room as the appliance.
- Clothing or other flammable materials should not be placed on or near the appliance.

FOR YOUR SAFETY

- Installation and service must be performed by a qualified installer, service agency or gas supplier.
- This installation must conform to local codes or, in the absence of local codes, to the current CAN/CGA-B149 installation code (Canada) or National Fuel Gas Code ANSI Z223.1.2 (USA)
- To prevent injury, do not allow anyone who is unfamiliar with the stove to operate it.
- **To prevent injury, if the pilot or pilot and burners have gone out on their own, open the glass door and wait 5 minutes to air out before attempting to re-light the stove.**
- Always keep the area around these appliances clear of combustible material, gasoline and other flammable liquids and vapours.
- These appliances should not be used as a drying rack for clothing or for hanging Christmas stockings/ decorations.
- Due to the paint curing on the stove, a faint odor and slight smoking will likely be noticed when the stove is first used. Open a window until the smoking stops.

Always connect this gas stove to a vent system and vent to the outside of the building envelope. Never vent to another room or inside the building. Make sure the specified vent pipe is used, properly sized and of adequate height to provide sufficient draft. Inspect the venting system annually for blockage and signs of deterioration.

WARNING: Failure to position the parts in accordance with the diagrams in this booklet, or failure to use only parts specifically approved with this appliance, may result in property damage or personal injury.

WARNING: Do not operate with the glass front removed, cracked or broken. Replacement of the glass should be done by a licensed or qualified service person.

- Never use solid fuels such as wood, paper, cardboard, coal, or any flammable liquids, etc., in this appliance.
- Do not use this heater if any part has been under water. Immediately call a qualified service technician to inspect the heater and to replace any part of the control or gas control systems that have been under water.
- Do not abuse the glass by striking it or slamming the door shut.

Table of Contents

Safety Precautions....2
Table of Contents....3
Codes And Approvals....4
Specifications....5
- Rating Label Location....5
- Dimensions....5

Operating Instructions....6
- Pilot Lighting Instructions....6
- Air Shutter....7
- Remote controls (Optional)....8
- BlowerSpeed....8
- Normal Sounds During Operation....8

Maintenance And Service....9
- Routine Maintenance....9
- Cleaning The Painted Surfaces....9
- Check Pilot and Burner Flames....9
- Glass Door Removal....9
- Replacing the Glass....10
- Cleaning The Firebox....10
- Burner Removal & Installation....10
- Fuel Conversion....11

Initial Installation....13
- Preparation For Installation....13
- Clearances to Combustibles....13
- Planning Your Installation....14
- Approved Vent Parts....15
- Vent Termination Restrictions....17
- Vent Configurations and Restrictor Settings....18
- Restrictor Installation....19
- Horizontal Installation....20
- Vertical Installation....22
- Cathedral Ceiling Installation....24
- Corner Installations....25
- Converting Top Vented into Rear Vented....26
- Installation of Rear Vented Appliance....26
- Installation of Top Vented; Horizontal Termination....27
- Installation of Top Vented; Vertical Termination....27
- Gas Line Connection and Testing....28
- Electrical Requirements For Gas Valve and Optional Blower....29
- Installation of Optional Blower....30

Secondary Installation....31
- Installation of Log Set....31
- Installation of Ceramic Firebox Liner (Optional)....34

Trouble Shooting....35
Parts List....36
Parts Diagram....38
Warranty....39
Installation Data Sheet....42

Codes And Approvals

DIRECT VENT ONLY: This type is identified by the sufix DV. This appliance draws all of its air for combustion from outside the dwelling, through a specially designed vent pipe system.

TOP VENT DV **Certified for installation from 0-4500 ft (0-1372 m)**

REAR VENT DV **Certified for installation from 0-4500 ft (0-1372 m) with 36" (915 mm) snorkel (refer to 'Converting Top Vented into Rear Vented').**

In the USA: The appliance may be installed at higher altitudes. Please refer to your American Gas Association guidelines which state: the sea level rated input of Gas Designed Appliances installed at elevations above 2000 (610 m) feet is to be reduced 4% for each 1000 feet (305 m) above sea level. Refer also to local authorities or codes which have jurisdiction in your area regarding the de-rate guidelines.

In Canada: When the appliance is installed at elevations above 4500 feet (1372 m), the certified high altitude rating shall be reduced at the rate of 4% for each additional 1000 feet (305 m).

- This appliance has been tested by INTERTEK (**Warnock Hersey**) and found to comply with the established VENTED GAS FIREPLACE HEATER standards in CANADA and the USA as follows:

VENTED GAS FIREPLACE HEATER (Cara DV; NG/LPG)

TESTED TO: ANSI Z21.88a-2003/CSA 2.33a-2003 VENTED GAS FIREPLACE HEATERS

CAN/CGA 2.17-M91 GAS FIRED APPLIANCES FOR HIGH ALTITUDES

CSA P.4.1-02 TESTING METHOD FOR MEASURING ANNUAL FIREPLACE EFFICIENCY

This ENVIRO CARA Fireplace:

- Has been certified for use with either natural or propane gases. (See rating label.)
- Is not for use with solid fuels.
- Is approved for bedroom or bed sitting room. (**IN CANADA**: must be installed with a listed wall thermostat. **IN USA**: see current ANSI Z223.1 for installation instructions.)
- Must be installed in accordance with local codes. If none exist, use current installation code CAN/CGA B149 in Canada or ANSI Z223.1/NFPA 54 in the USA.
- Must be properly connected to an approved venting system and not connected to a chimney flue serving a separate solid-fuel burning appliance.

IMPORTANT NOTICE (Regarding first fire up): When the unit is turned on for the first time, it should be turned onto high without the fan on for the first 4 hours. This will cure the paint, logs, gasket material and other products used in the manufacturing process. It is advisable to open a window or door, as the unit will start to smoke and can irritate some people. After the unit has gone through the first burn, turn the unit off including the pilot, let the unit get cold then remove the glass door and clean it with a good gas fireplace glass cleaner, available at your local ENVIRO dealer.

NATIONAL FIREPLACE INSTITUTE®

NFI

CERTIFIED

www.nficertified.org

We recommend that our gas hearth products be installed and serviced by professionals who are certified in the U.S. by the National Fireplace Institute® (NFI) as NFI Gas Specialists.

Specifications

WARNING:

Operation of this heater when not connected to a properly installed and maintained venting system can result in carbon monoxide (CO) poisoning and possible death.

Rating Label Location:

The Rating Label is located on the inside surface of the pedestal control door.

Dimensions:

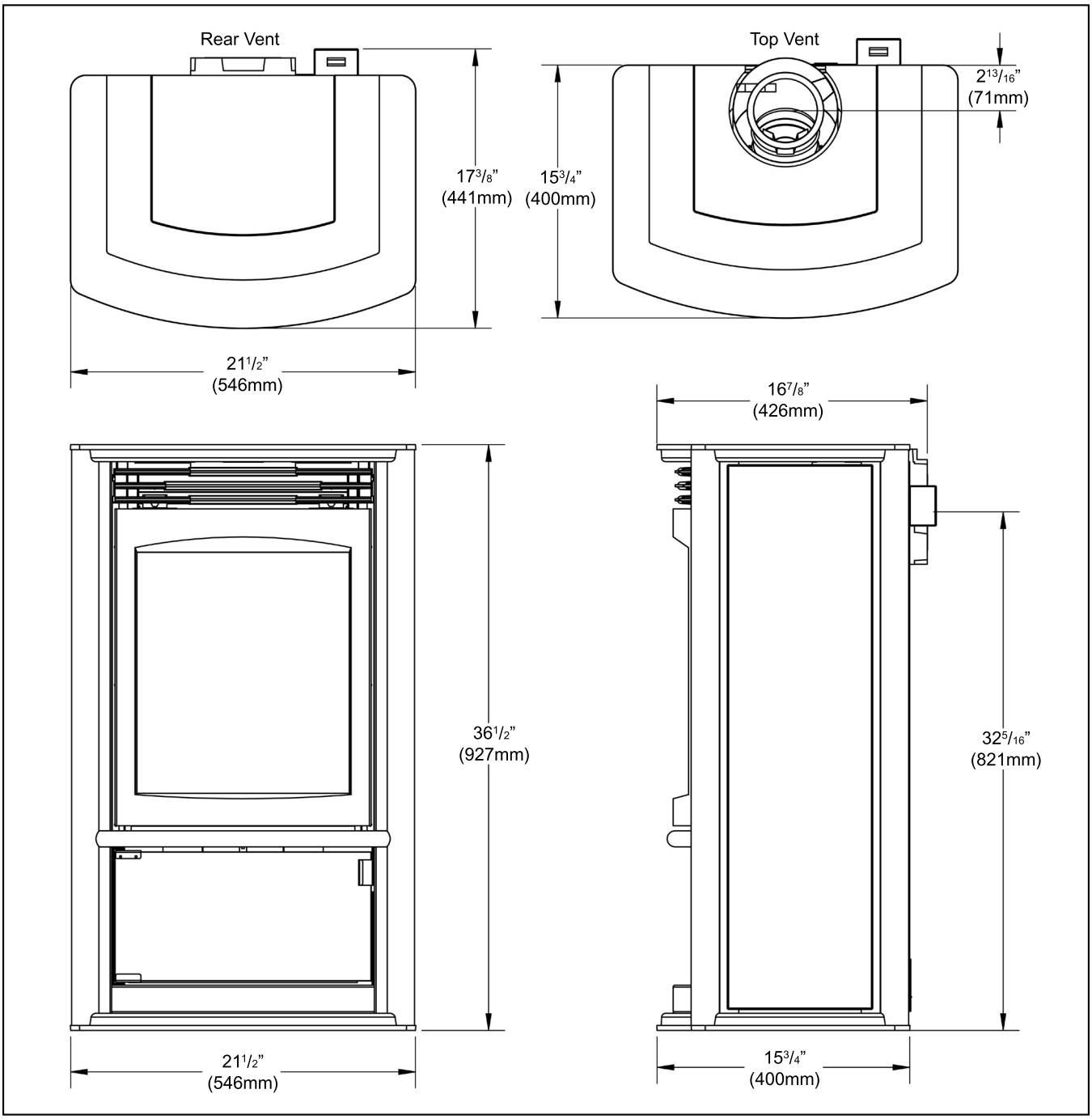

Figure 1: Cara Exterior Dimensions.

Operating Instructions

For Your Safety, Read Safety Precautions And Lighting Instructions Before Operating.

WARNING: IF YOU DO NOT FOLLOW THESE INSTRUCTIONS EXACTLY A FIRE OR EXPLOSION MAY RESULT, CAUSING PROPERTY DAMAGE, PERSONAL INJURY OF LOSS OF LIFE.

Pilot Lighting Instructions:

CAUTION: Hot while operating. Do not touch, severe burns may result.
Keep children, clothing, furniture, gasoline or other flammable vapors away.

CAUTION: Do not operate this fireplace with the glass removed, cracked or broken. Replacement of the glass should be done by a licensed or qualified person! This appliance needs fresh air for safe operation and must be installed with provisions for combustion and ventilation air. See installation and operating instructions manual. Keep burner and control compartment clean.

WARNING: Improper installation, adjustment, alteration, service or maintenance can cause injury or property damage, or loss of life. Refer to owner's manual provided with this appliance. See installation and operating instructions accompanying appliance. Installation and service must be performed by a qualified installer, service agency, or the gas supplier.

FOR YOUR SAFETY READ BEFORE OPERATING

WARNING: IF YOU DO NOT FOLLOW THESE INSTRUCTIONS EXACTLY, A FIRE OR EXPLOSION MAY RESULT CAUSING PROPERTY DAMAGE, PERSONAL INJURY OR LOSS OF LIFE.

A) This appliance is equipped with a pilot, which must be lit by hand by following these instructions exactly.

B) BEFORE LIGHTING smell all around the appliance area for gas and next to the floor because some gas is heavier than air and will settle on the floor.

WHAT TO DO IF YOU SMELL GAS:
Do not try to light any appliance. Do not touch any electrical switch: do not use any phone in your building. Immediately call your gas supplier from a neighbor's phone. Follow the gas suppliers instructions. If you cannot reach your gas supplier, call the fire department.

C) Use only your hand to push in or turn the gas control knob; NEVER use tools. If the knob will not push in or turn by hand, do not try to repair it. Call a qualified service technician. Force or attempted repair may result in a fire or explosion.

D) Do not use this appliance if any part has been under water.
Immediately call a qualified service technician to inspect the appliance and to replace any part of the control system and any gas control which has been under water.

LIGHTING INSTRUCTIONS

1. STOP! Read the safety information above on this label.
2. Turn off all electrical power to this appliance.
3. Turn off the gas control knob clockwise ↷ to the off position.
4. Open door. Wait flve (5) minutes to clear out any gas. Close door. If you smell gas STOP! Follow "B" in the above safety information. If you do not smell gas go to the next step.
5. Find pilot-located to the left behind the side log.
   Turn the gas control knob counter-clockwise ↶ to "PILOT". Push the gas control in fully and hold, keep knob depressed for about 30 seconds after the pilot is lit. Release knob. If pilot goes out, repeat steps 4 through 5.

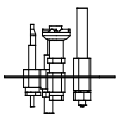

WARNING: This gas valve has a lockout device, which will not allow the pilot burner to be relit until the thermocouple has cooled. If the knob does does not pop up when released, stop and immediately call your service technician or gas supplier. If the pilot does not stay lit after several tries, turn the gas control knob to "OFF" and call your service technician or gas supplier.

6. Turn the gas control knob counter clockwise ↶ to the "ON" position.
   Flip the burner switch to "ON" THEN TURN THE "HI/LOW" knob to the desired setting.
7. Turn on the electrical power to the unit.

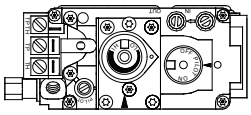

TO TURN OFF GAS TO APPLIANCE

1. Flip burner switch to "OFF"
2. Turn the gas control knob clockwise ↷ to the "OFF" position.
3. Turn off all electrical power to the appliance if service is to be performed.

Figure 2: Lighting Instruction Label.

1. Turn off the gas to the fireplace. **If not recently done, remove the door and let the unit air out for at least five (5) minutes to clear out any gas.** Turn on gas to the heater. Leak test all joints with soapy water. **NEVER USE OPEN FLAME FOR LEAK TESTING.**
2. Start the pilot by pressing the gas control knob and turning it to PILOT. While holding the gas control knob in, press the piezo ignitor several times until the pilot light starts. Hold the gas control knob in for 30 seconds. Check that the pilot has fully engulfed the thermocouple assembly (refer to Figure 6).
3. Start the main burner by turning the gas control knob to ON and then turn the rocker switch to ON. Check that all burner ports have flame.
4. Leak test all gas joints again.

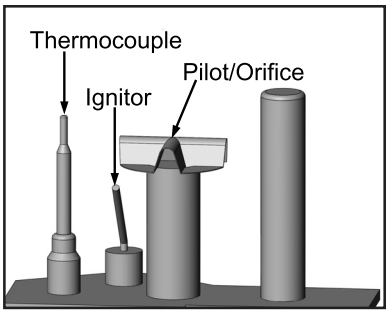

Figure 3: Pilot Assembly.

Operating Instructions

For Your Safety, Read Safety Precautions
And Lighting Instructions Before Operating

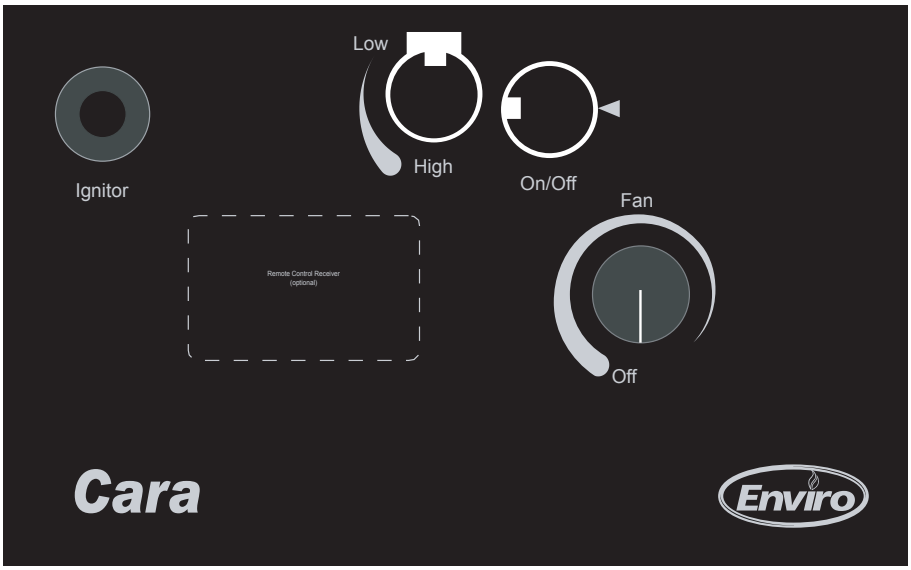

Figure 4: Cara Control Panel.

Air Shutter:

The air shutter is controlled by sliding the air shutter adjustment screw (shown in Figure 5) either forwards or backwards. The adjustment screw, for the primary air, is located on the bottom of the firebox. The air shutter nut can be accessed by removing the control panel. This is best done during the initial installation.

Sliding the shutter forwards increases the primary air while sliding the shutter backwards decreases the primary air.

The air shutter allows the amount of air coming into the fireplace to be adjusted in order to accommodate different climates and venting arrangements. Start the pilot and then the burner. Make sure the pilot flame is burning normally and none of the burner ports are plugged. Let the fireplace burn for roughly fifteen (15) minutes and then examine the flames, compare the flames to Figure 56.

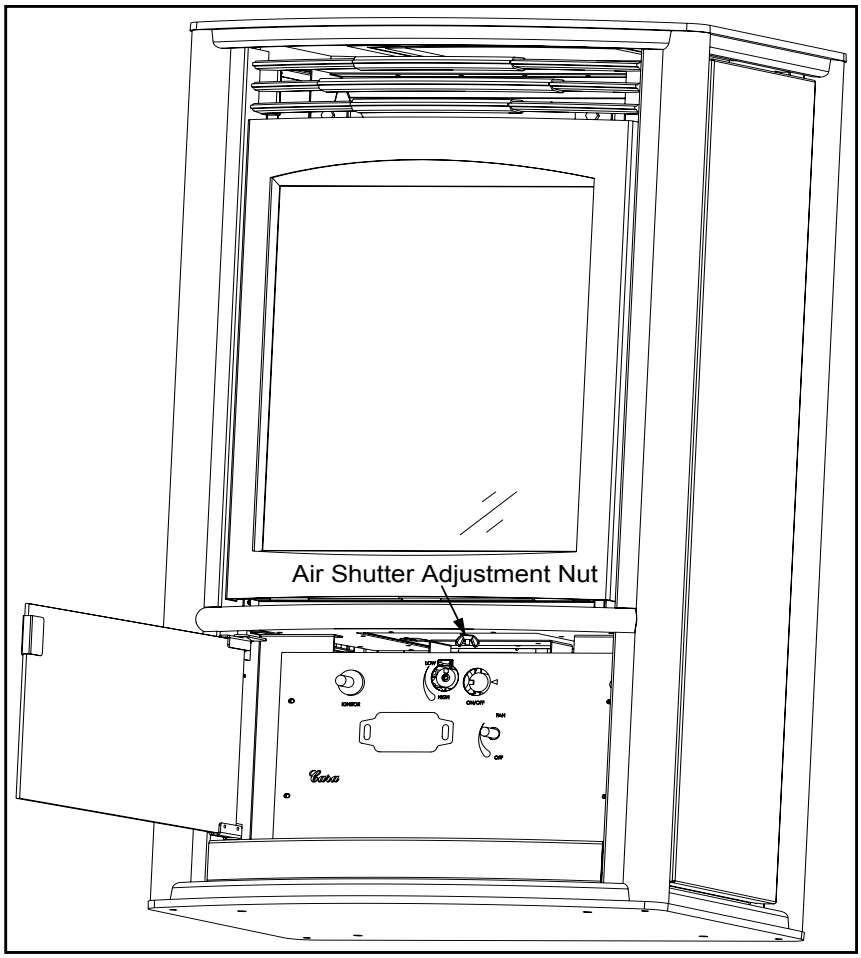

Figure 5: Air Shutter Adjustment.

Operating Instructions

For Your Safety, Read Safety Precautions And Lighting Instructions Before Operating

The ideal flame will be blue at the base and light orange above. The flames should be of medium height. If the flames look like this (refer to Figure 56), no adjustment is needed. If the flames are fairly short and mostly blue, the fireplace is getting too much air. Therefore, the air shutter should be closed slightly until the correct flames are achieved. Flames that are very orange, with tall, dark, stringy tips, are not getting enough air. Open the air shutter until the flames clean up. If the shutter is opened, or closed all the way, and the correct flames cannot be attained, turn off the gas and contact the dealer.

Warning: Incorrect air shutter adjustment may lead to improper combustion, which is a safety hazard. Contact the dealer if there is any concern about the venturi adjustment.

Table 1: Air Shutter Setting Information.

	Natural Gas	Propane
Amount Air Shutter is Open	¼" (6mm) minimum	Completely Open

Remote controls (Optional):

This fireplace can use an optional remote control or an optional cordless wall thermostat. If either of these are to be used to control the fireplace for the majority of the time, leave the ON/OFF switch (on the rear of the unit) in the "ON" position. Consult the instructions included with the remote/wall thermostat for operation guidelines. When insalling the Remote Control module, cut out the label along the dotted line of the Cara Control Panel, and mount the module to the back of the panel using the two (2) provided Torx T-20 screws and nuts.

Blower Speed:

For units equipped with blowers, the blower will come on only when the fireplace is up to temperature (approximately 12 minutes with unit on high). The blower is equipped with a variable fan controller, located in the front control panel. This manual control will adjust the fan speed from high to low or turn the fan off. A remote control for the fan is available through your dealer.

Normal Sounds During Operation:

Table 2: Normal Sounds

Component	**Sound & Reason**
Cara	Creaking when heating up or cooling down.
Burner	Light pop or poof when turned off; this is more common with LP units.
Temperature Sensor	Clicking when it senses to turn the blower on or off.
Pilot Flame	Quiet whisper while the pilot flame is on.
Blower / Fan	Air movement that increase and decreases with the speed of the blower. The blower is pushing the heat from the fireplace into the room.
Gas Control Valve	Dull click when turning on or off, this is the valve opening and closing.

Maintenance And Service

Routine Maintenance:

At least once a year, run through the following procedures to ensure the system is clean and working properly. Check the burner to see if all the ports are clear and clean. Check the pilot to make sure it is not blocked by anything. The pilot flame should be blue with little or no yellow on the tips.

Warning: Clearances must be sufficient to allow access for maintenance and service
Warning: Failure to position the parts in accordance with this manual, or failure to use only parts specifically approved with this appliance may result in property damage or personal injury.

The venting system must be periodically examined; it is recommended the examination is done by a qualified agency.

Cleaning The Painted Surfaces:

Painted faces should be wiped with a damp cloth periodically.

Check Pilot and Burner Flames:

Periodically do a visual check of the pilot flames. One flame should encompass the ignitor and thermocouple and the other should burn over the burner ports (see Figure 6). Also check that the burner is operating correctly, refer to Figure 56.

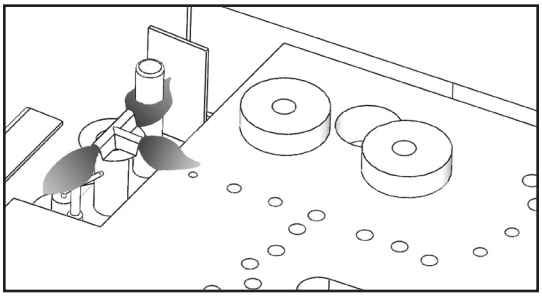

Figure 6: Pilot Flame.

Glass Door Removal:

IMPORTANT: If the door is not engaged properly on the hooks, damage to the fireplace and/or floor, personal injury, or even death may occur.

1. Turn the unit off and wait until it has cooled down.
2. Remove the cast iron louvers from above the door by lifting the louvers up and out.
3. Pull the two (2) door hooks, on top of the door, forward and up (see Figure 7).
4. Lift the glass door assembly straight up and out.

Ensure the door is properly fastened before attempting to light the appliance. To re-installing the glass door, slide the three (3) door hook slots, on the bottom of the door, over the three (3) door hooks on the unit. Pull the two (2) door hooks, on top of the door, forward and slide them into the two (2) door hook slots.

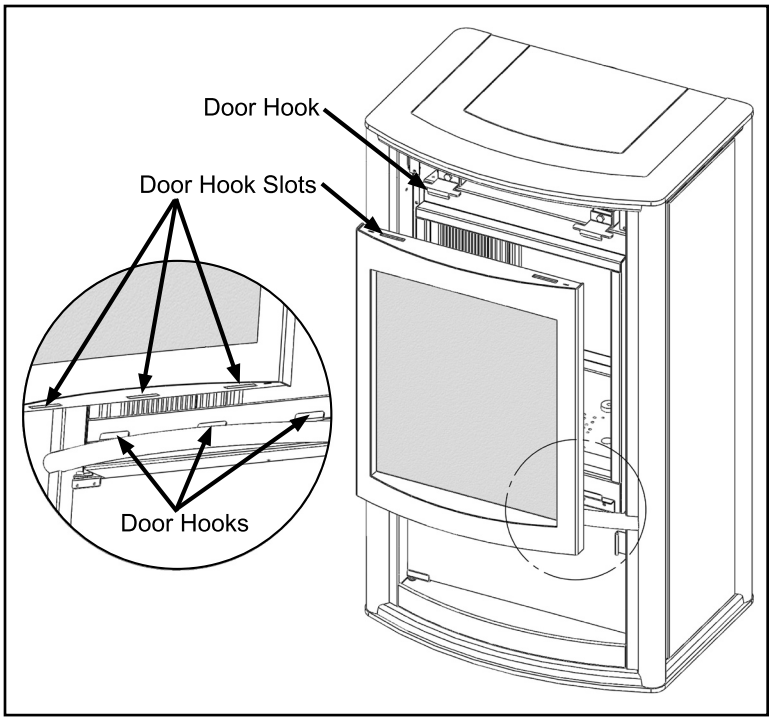

Figure 7: Door Removal / Installation.

Maintenance And Service

Replacing the Glass:

IMPORTANT: Do not operate with the glass front removed, cracked or broken. The glass in the fireplace is a high temperature ceramic. If the glass is damaged in any way, a factory replacement door is required (see Parts List). Wear gloves when handling the damaged glass door assembly to prevent personal injury. When the glass door assembly is being transported, it must be wrapped in newsprint and tape and/or a strong plastic bag. Removal and replacement of the glass from the door **must** be done by a licensed or qualified service person. The door assembly **must** be purchased from an ENVIRO dealer. No substitute materials are allowed.

Cleaning The Firebox:

With the fireplace at room temperature, carefully remove the logs. Gently remove the ceramic burner and place on a paper towel. Vacuum the bottom of the firebox thoroughly. Carefully clean any dust off the logs and remove any lint from the burner and pilot. At this time, inspect the burner pan for cracking or severe warping. If a problem is suspected, contact the dealer. Check the logs for deterioration or large amounts of soot; a small amount on the bottom side of the logs is normal. Replace the logs as in the Log Set Installation section.

Burner Removal & Installation:

IMPORTANT: Ensure the unit is off and at room temperature.

To remove the burner:

1. Remove the glass door as shown in the Maintenance and Service - Glass Door Removal.
2. Carefully remove the log set.
3. Slide the burner back just far enough so the front edge of the burner does not catch on the front lip of the firebox.
4. Lift the front of the burner up and out of the firebox.

To install the burner:

1. Insert the mixing tube into the mixing tube box (refer to Figure 8).
2. When the burner is resting in the firebox ensure that the front edge of the burner is lined up with the front lip of the firebox (see figure 9).
3. Re-install the logset (see Secondary Instalation - Log Set Installation) and the door.
4. Check burner for proper operation.

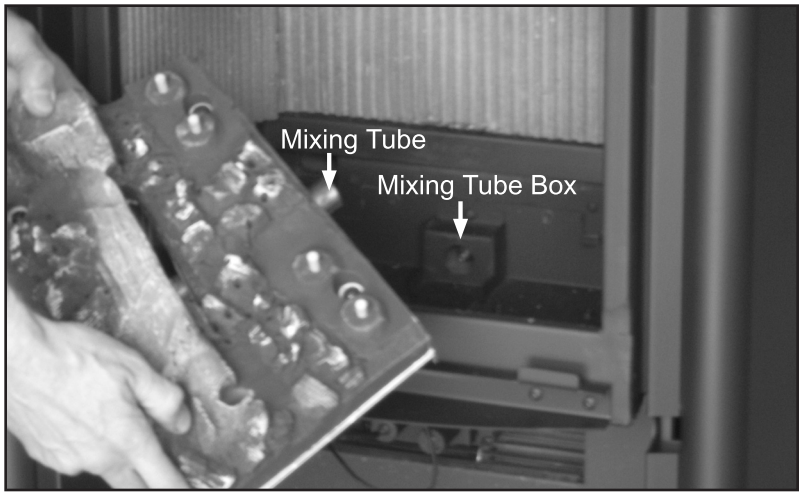

Figure 8: Install the Burner to the Firebox.

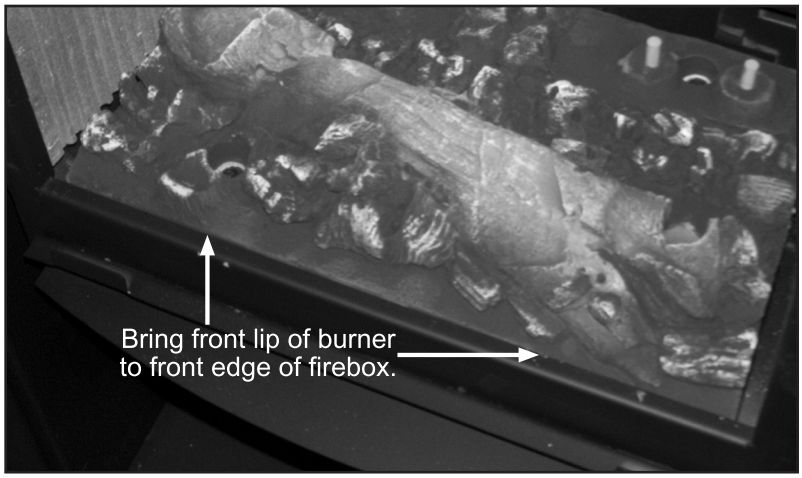

Figure 9: Align Burner With Firebox.

Maintenance And Service

Fuel Conversion:

TO BE INSTALLED BY A QUALIFIED SERVICE AGENCY ONLY

Please read and understand these instructions before installing.

Warning: This conversion kit shall be installed by a qualified service agency in accordance with the manufacturer's instructions and all applicable codes and requirements of the authority having jurisdiction. If the information in these instructions is not followed exactly, a fire, explosion or production of carbon monoxide may result causing property damage, personal injury or loss of life. The qualified service agency is responsible for the proper installation of this kit. The installation is not proper or complete until the operation of the converted appliance is checked as specified in the manufacturer's instructions supplied with the kit.

Kit Parts List:
Orifice (NG - PO512-37 DMS or LP - PO512-1/16" DMS)
Installation instruction sheet

Carefully inspect all parts supplied with this conversion kit. If any parts have been damaged or are missing, contact your dealer, distributor or courier company to have them replaced before starting this installation.

Conversion Kit Installation:

1. Turn control knob on the gas valve to the "OFF" position and shut the gas supply off at the shut-off valve upstream of the unit. CAUTION: The gas supply must be shut off prior to disconnecting the electrical power and before proceeding with the conversion. Allow the valve and unit to cool down to room temperature.
2. Remove the glass door as shown in the Maintenance and Service - Glass Door Removal.
3. Carefully remove the log set.
4. Slide the burner back just far enough so the front edge of the burner does not catch on the front lip of the firebox. Lift the front of the burner up and out of the firebox. See Maintenance and Service - Burner Removal & Installation.
5. Convert the burner orifice:
   a) Remove the main burner orifice with a ⅜" socket (refer to Figure 10).
   b) Install the alternate orifice from the kit.
6. Convert the pilot injector:
   a) Loosen the pilot stem a half turn using a $^{7}/_{16}$" wrench (refer to Figure 11).
   b) Slide the tab to the other side of the pilot stem (refer to Figures 12 & 13).
   c) Tighten the pilot stem.



Figure 10: Removing the orifice.

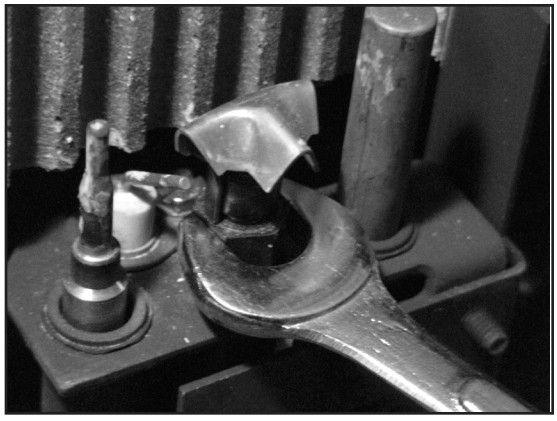

Figure 11: Turning Pilot Stem.

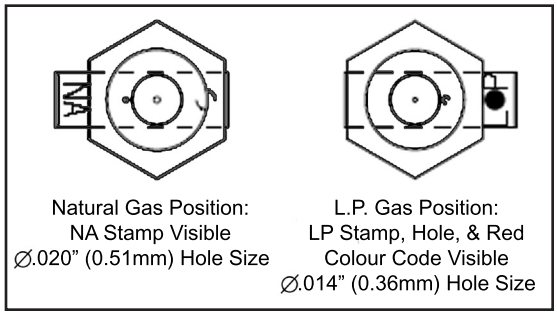

Figure 12: NG & LP Gas Positions on Pilot.

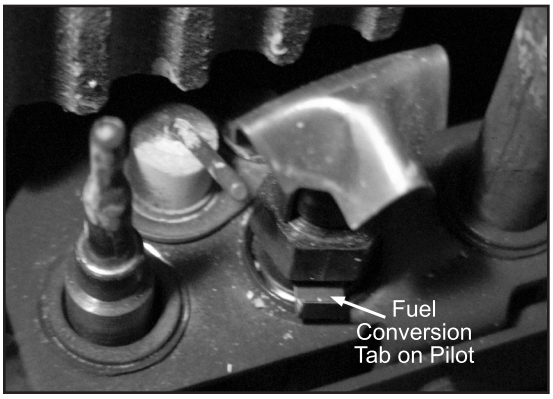

Figure 13: Fuel Conversion Tab on Pilot.

e) Flip the screw (refer to Figure 16).
f) Using the Allen wrench as shown in Figure 15, rotate the screw clockwise until a torque of 9 inch lbs. **WARNING!** Do not over tighten the screw. It is recommended that you grip the wrench by the short side.
g) Verify that if the conversion is from NG to LPG, the screw must be re-assembled with the red o-ring visible (refer to Figure 17). If the conversion is from LPG to NG, the red o-ring of the screw must be not visible.
h) Re-attach the black protection cap that was removed in step a (Figure 14).

8. Re-install the burner, ceramic panels, log set and glass door. Also refer to Secondary Installation - Log Set Installation. When re-installing the burner, ensure that the burner to pilot hood relationship is similar to what is shown in Figure 18.
9. Reconnect the main gas line if it was disconnected and open the shut-off valve at the gas line to the unit.
10. Use a small brush to apply a warm soapy water solution to all gas connections (use a half dish soap and half warm water). If a gas leak is present, bubbling will occur. Gas leaks can be repaired by using an approved pipe thread sealant or approved Teflon tape. NEVER USE AN OPEN FLAME WHEN TESTING FOR LEAKS.
11. Reconnect the electrical power to the unit.
12. Relight the main burner in both the "HI" and "LO" positions to verify proper burner ignition and operation and proper flame appearance (refer to Figure 56). Also refer to Secondary Installation - Log Set Installation for a flame appearance picture.
13. MAKE SURE that the conversion label is installed on or close to the rating label to signify that the unit has been converted to a different fuel type.

7. Convert the SIT gas valve:
   a) Remove the extension knobs from the valve.
   b) Remove the black protection cap from the HI/LO knob by hand shown in Figure 14.
   c) Insert a $^{5}/_{32}$" or 4 mm Allen wrench into the hexagonal key-way of the screw (see Figure 15), rotate it counter-clockwise until it is free and extract it.
   d) Check that the screw is clean and if necessary remove dirt.

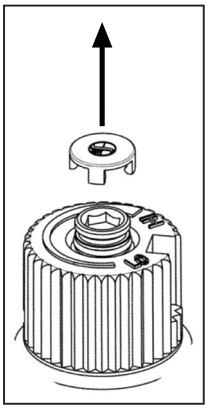

Figure 14: Removing valve cap.

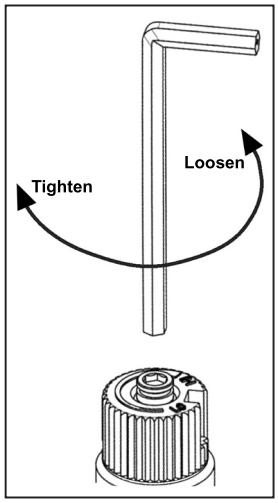

Figure 15: Removing valve screw.

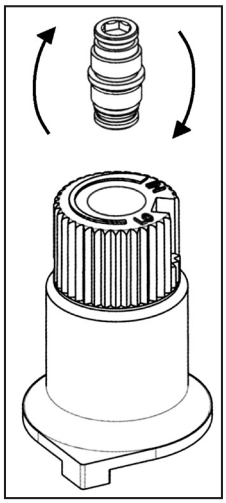

Figure 16: Flip valve screw.

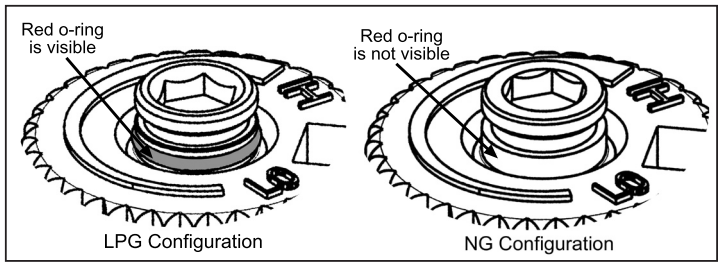

Figure 17: O-ring on valve screw.

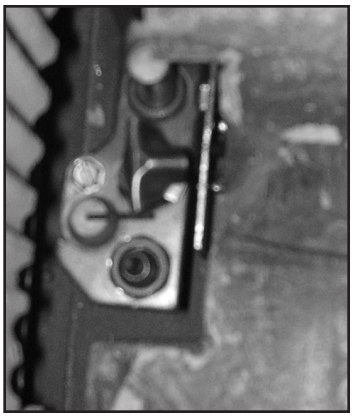

Figure 18. Pilot assembly beside the burner

Initial Installation

QUALIFIED INSTALLERS ONLY

WARNING: Operation of this heater when not connected to a properly installed and maintained venting system can result in carbon monoxide (CO) poisoning and possible death.

Preparation For Installation:

- Remove the packaging from the appliance, and check to make sure there is no damage. If damage is found, please report it to both the carrier and your dealer as soon as possible.
- Before beginning, carefully check the glass door and the log set
- Locate a position where the flue system of the stove can be properly installed without damaging the integrity of the building; e.g. cutting a wall or ceiling joist.
- Check stove and flue system clearance requirements.
- Locate the stove where it can be accessed by a gas supply line.
- Locate the stove in a large and open room that is centrally located in the house. This will optimize heat circulation and comfort.
- As the stove can be equipped with a convection fan, ensure that an electrical outlet is within 6 ft (1.8 m) of the stove.
- The flow of combustion and ventilation air must not be obstructed.

Clearances to Combustibles:

CLEARANCES MUST BE SUFFICIENT TO ALLOW ACCESS FOR MAINTENANCE AND SERVICE.

Table 3: Clearance to Walls in an Open Area, refer to Figure 19.

Letter	Description	Clearance
A	Sidewall to unit	11 inches (279 mm)
B	Backwall to unit	2.5 inches (64 mm)
C	Corner to unit	2.5 inches (64 mm)
D	Ceiling to floor	90 inches (2286 mm)
E	Floor (on hardwood and linoleum)	0 inches (0 mm)

Table 4: Clearance to Walls in an Alcove

Description	Clearance
Minimum Width	43½ inches (1105 mm)
Minimum Height	48 inches (1219 mm)
Maximum Depth	24 inches (610 mm)

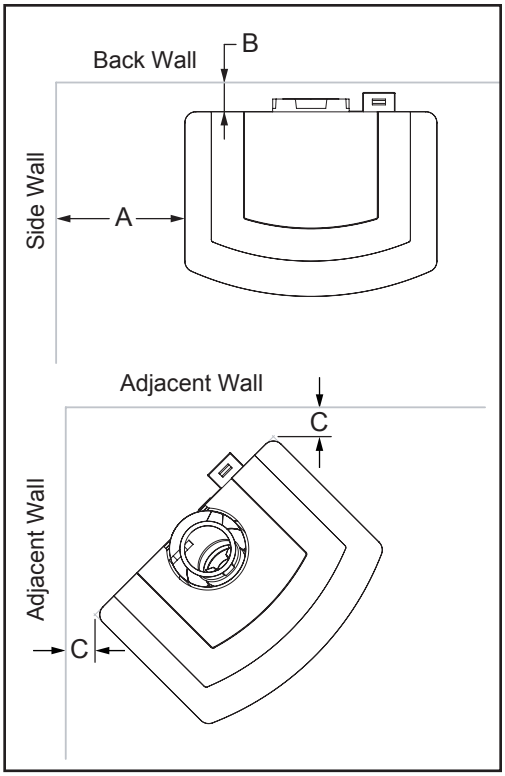

Figure 19: Clearance to Walls in an Open Area, refer to Table 3.

Initial Installation

QUALIFIED INSTALLERS ONLY

Planning Your Installation:

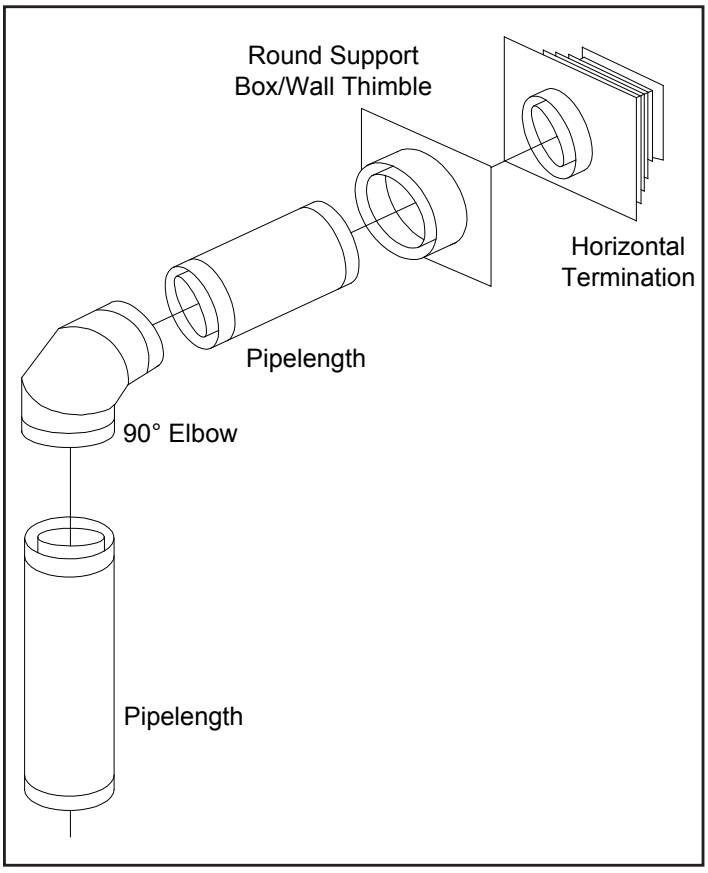

Figure 20 Common Horizontal Installation.

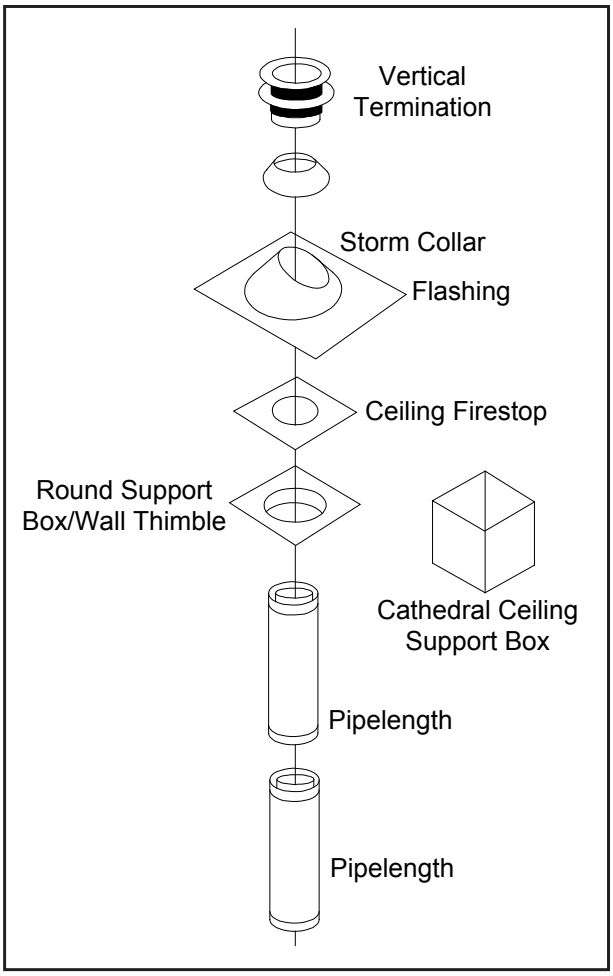

Figure 21: Common Vertical Installation.

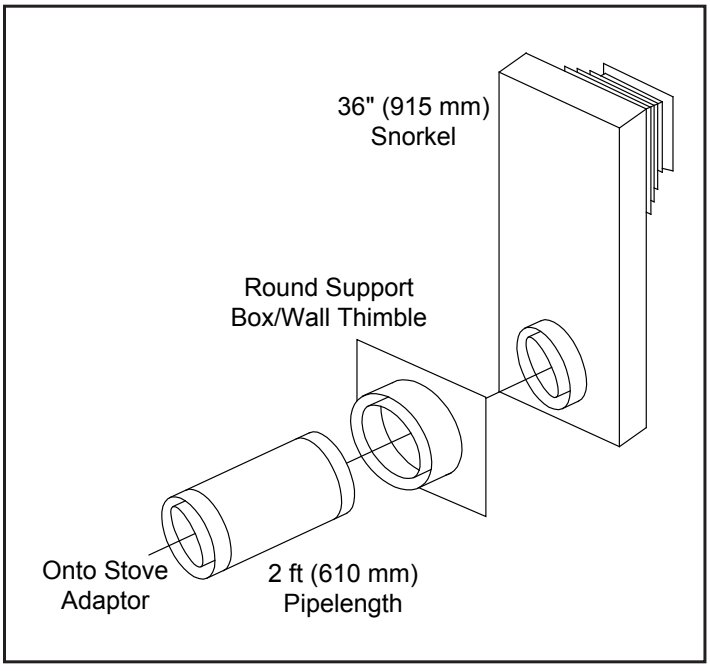

Figure 22: Common Snorkel Installation.

Initial Installation

QUALIFIED INSTALLERS ONLY

When planning your installation, it will be necessary to select the proper length of vent pipe for your particular requirements. It is important to note when passing through a wall, the maximum allowable wall thickness is 10 inches (25.4 cm); 1½ inches (3.8 cm) clearance to combustibles must be maintained. Select the amount of vertical rise desired for "vertical-to-horizontal" type installations. To determine the length of vent pipe required for vertical installations, measure the distance from the appliance flue outlet to the ceiling, the ceiling thickness, the vertical rise through the attic or second story, and allow for sufficient vent height above the roof line. For two story applications, a fire stop is required at each floor level. If an offset is needed in the attic, additional pipe and elbows will be required. To connect the venting system to the appliance flue outlet, a twist-lock adapter is built into the appliance at the factory. Refer to Initial Installation - Vent Configuration and Restrictor Settings for venting parameters.

Your total vent pipe length must be within the grid area of Figures 24 and 25. If a 90° elbow is used in the horizontal plane, 36" (91.4 cm) must be subtracted from the allowable horizontal run.

There are three (3) basic types of Direct Vent System installations. The three (3) types of installations are shown in Figures 20 through 22.

Approved Vent Parts:

Table 5: Approved Vent Manufacturers.

Manufacturer	Trade Name	Nominal Sizes
American Metal Products	AmeriVent Direct	4" - 6 5/8"
Security Chimneys International LTD	Secure Vent	4" - 6 5/8"
Selkirk Metalbestos	Direct-Temp	4" - 6 5/8"
Simpson Dura-Vent	Direct Vent GS	4" - 6 5/8"

The Cara fireplace has been tested and certified for use with AMERICAN METAL PRODUCTS "AMERIVENT DIRECT", SIMPSON DURAVENT TYPE GS PIPE FOR GAS STOVES. SECURITY CHIMNEY'S "SECURE VENT DIRECT VENT SYSTEM" and SELKIRK "DIRECT-TEMP VENT SYSTEM" kits are available for horizontal and vertical venting. When using Simpson Duravent, it is recommended that, before installation, a bead of RTV High Temperature Silicone should be applied to each outer vent joint, and Mil-Pac to each inner joint. When planning an installation, it will be necessary to select the proper length of vent pipe for the particular requirements.

WARNING: Do not mix parts from different vent manufacturers' systems.

EXCEPTION TO WARNING: This product has been evaluated by Intertek for using a Direct Vent GS starting collar in conjunction with Secure Vent, Direct-Temp, and Ameri Vent Direct venting systems. Use of these systems with the Direct Vent GS starting collar is deemed acceptable and does not affect the Intertek WH listing of the appliance.

Initial Installation

QUALIFIED INSTALLERS ONLY

Table 6: Vent part numbers (Must state if galvanized or black wanted, PART NUMBERS).

Direct Vent GS	Direct-Temp	Secure Vent	Ameri Vent Direct	Description
908	4DT-6	SV4L6		6" pipe length
			4D7	7" pipe length
907	4DT-9			9" pipe length
906	4DT-12	SV4L12	4D12	12" pipe length
904	4DT-24	SV4L24	4D2	24" pipe length
903	4DT-36	SV4L36	4D3	36" pipe length
902	4DT-48	SV4L48	4D4	48" pipe length
945	4DT-EL45	SV4EBR45	4D45B	45° elbow, black
990	4DT-EL90	SV4EBR90	4D90B	90° elbow, black
950	4DT-VS	SV4VS		Vinyl siding standoff/sheild
942	4DT-WT	SV4RSN	4DWT	Wall thimble
953	4DT-SC	SV4FC	4DSC	Storm collar
963	4DT-FS	SV4BF	4DFSP	Fire stop
988	4DT-WS/B	SV4BM	4DWS	Wall strap/support/band
970	4DT-HKA	SV0SHK	4DHTK1	Horizontal termination kit (SD: Basic Kit, SEL: Kit A, SC: Standard Kit)
911				11" to 14 ⅝" pipe, adjustable
	4DT-AJ		4D12A	4" to 10" pipe , adjustable
		SV4LA12		1½" to 12" pipe , adjustable
943	4DT-AF6		4DF	Flashing, 0/12 to 6/12 roof pitch
943S	4DT-AF12		4DF12	Flashing, 7/12 to 12/12 roof pitch
		SV4FA		Flashing, 1/12 to 7/12 roof pitch
		SV4FB		Flashing, 8/12 to 12/12 roof pitch
943F		SV4F		Flat flashing
980	4DT-VC	SV4CGV	4DVC	Vertical termination
991	4DT-HVC			High wind vertical termination
984	4DT-HC	SV4CHC	4DHC	Horizontal square termination
985	4DT-HHC			High wind horizontal termination
978	4DT-VKC	SV0FAK	4DVTK	Vertical termination kit
981	4DT-ST36	SV4STC36		36" Snorkel Termination
971	4DT-HKB	SV0SHK2	4DHTK2	Horizontal termination kit (SD: Kit A, SEL: Kit B, SC: Kit)

Initial Installation

QUALIFIED INSTALLERS ONLY

Vent Termination Restrictions:

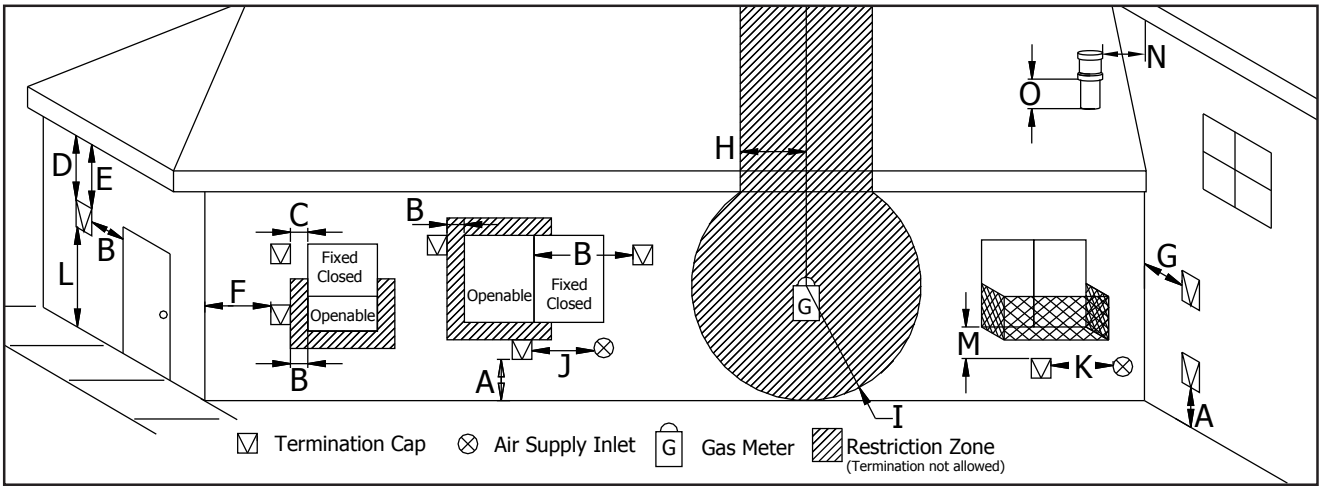

Figure 23: Vent Termination Restrictions, refer to Table 7.

Table 7: Vent termination clearances, refer to Figure 23.

Letter	Canadian Installation [1]	US Installation[2]	Description
A	12 in (30 cm)		Clearance above grade, verandah, porch, deck, or balcony.
B	12 in (30 cm)	9 in (23 cm)	Clearance from window or door that may be opened.
C	12 in (30 cm)*		Clearance from permanently closed window (to prevent condensation).
D	22-3/4 in (57.8 cm)*		Vertical clearance to ventilated soffit located above the terminal, within a horizontal distance of 2 ft (60 cm) from center line of terminal.
E	22-3/4 in (57.8 cm)*		Clearance to unventilated soffit.
F	12 in (30 cm)*		Clearance to outside corner.
G	18 in (45.7 cm)*		Clearance to inside corner.
H	3 ft (91 cm) within a height of 15 ft (4.5 m) above the meter/ regulator assembly	3 ft (91 cm) within a height of 15 ft (4.5 m) above the meter/ regulator assembly*	Clearance to each side of center line extended above meter/regulator assembly.
I	3 ft (91 cm)	3 ft (91 cm)*	Radial clearance around service regulator vent outlet.
J	12 in (30 cm)	9 in (23 cm)	Clearance to non-mechanical air supply inlet to building, or the combustion air inlet to any other appliance.
K	6 ft (1.83 m)	3 ft (91 cm) above if within 10 ft (3 m) horizontally	Clearance to mechanical air supply inlet.
L	7 ft (2.13 m)[t]	7 ft (2.13 m)*[t]	Clearance above paved sidewalk or paved driveway located on public property.
M	12 in / 30 cm[+]	12 in / 30 cm*[+]	Clearance under verandah, porch, deck, or balcony.
N	12 in (30 cm)*		Clearance horizontally to any surface (such as an exterior wall) for vertical terminations.
O	12 in (30 cm)		Clearance above roof line for vertical terminations.

[1] In accordance with the current CSA B149, Natural Gas and Propane Installation Code.
[2] In accordance with the current ANSI Z223.1 NFPA 54, National Fuel Gas Code.
* These numbers are only estimates. Clearance in accordance with installation codes and the requirements of the gas supplier.
[t] A vent shall not terminate directly above a side walk or paved driveway that is located between two single family dwellings and it serves both dwellings.
[+] Permitted only if verandah, porch, deck, or balcony is fully open on a minimum of two sides beneath the floor.

NOTE: Venting terminals shall not be recessed into walls or siding.

Initial Installation

QUALIFIED INSTALLERS ONLY

Vent Configurations and Restrictor Settings:

Figure 24 and 25 shows the range of possible vent configurations if the unit is top vented, for vertical and horizontal terminations, any layout that remains within the grid areas is acceptable. They also show the vent restrictor required, relative to the length of vent pipe. Longer vertical vent lengths necessitate greater restriction.

Having the fewest number of elbows is ideal, as they tend to disrupt air movement. Using 45° elbows is preferable to using 90° elbows. Also, a shorter vent system will perform better than a longer one.

If the unit is rear vented it may have a maximum horizontal run of 36" (91.4 cm) and must be used with a 36" (91.4 cm) snorkel termination.

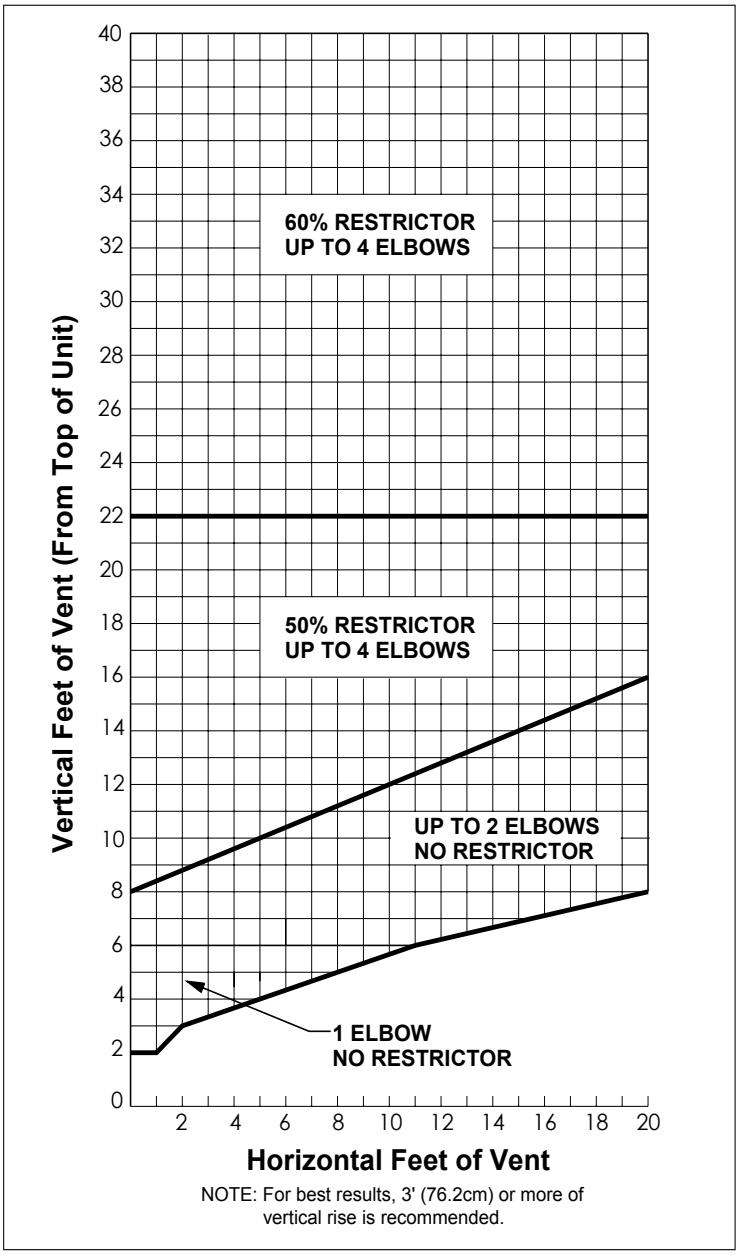

Figure 24: Possible Vent Configurations for Top Vented; Vertical and Horizontal Terminations with Elbows.

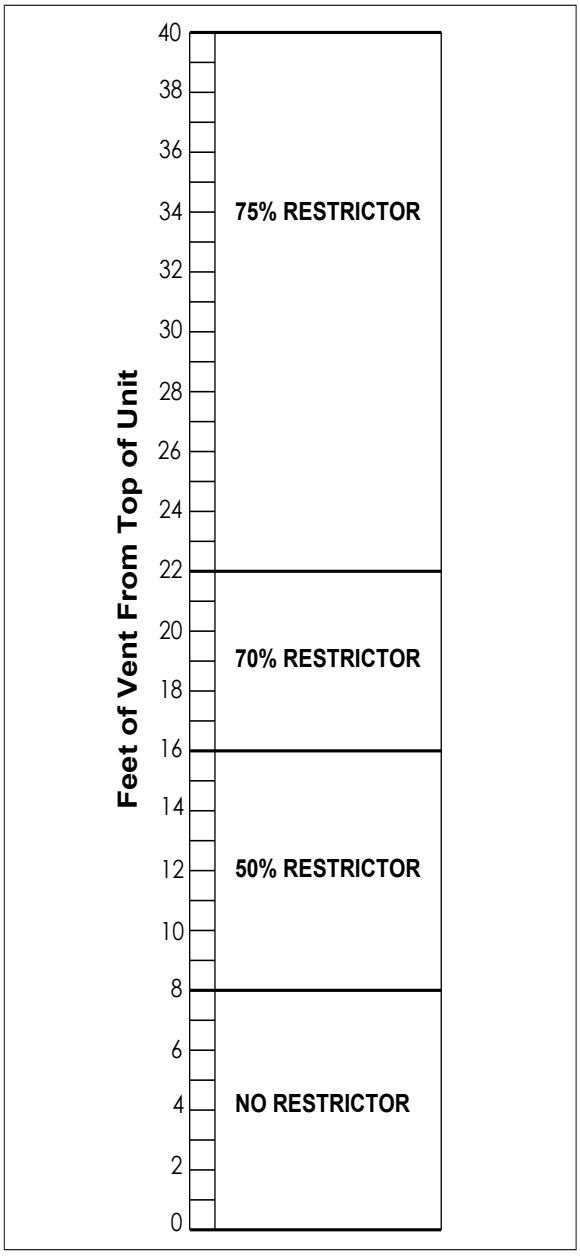

Figure 25: Possible Vent Configurations for Top Vented; Straight Vertical Vent & Terminations.

Initial Installation

QUALIFIED INSTALLERS ONLY

Restrictor Installation:

The **ENVIRO** CARA has been designed for use with an add-in restrictor. The restrictor is designed to maintain flame appearance when installing this unit with vertical chimneys as well as installations with longer horizontal vent applications. It does this by controlling the amount of air moving through the vent pipe.

1. Choose the appropriate restrictor for the installation (see Initial Installation - Vent Configurations and Restrictor Settings). To avoid injury, install the restrictor when the fireplace is cool or use welder's gloves or oven mitts.
2. Remove the glass door as shown in the Maintenance and Service - Glass Door Removal.
3. Carefully remove the log set.
4. Slide the burner tray back just far enough so the front edge of the burner does not catch on the front lip of the firebox. Lift the front of the burner up and out of the firebox.
5. Remove the firebox liner (see Secondary Installation - Installation of Firebox Liners).
6. Remove the two (2) Torx T-20 screws holding the back of the firebox baffle in place and unhook the front tabs (refer to Figure 26).
7. Remove two (2) ¼" hex head screws for the restrictor, place restrictor in the flue collar (see Figure 27) and fasten in place with the two (2) ¼" hex head screws.
8. Re-install the firebox baffle, firebox liners, burner (see Maintenance and Service - Burner Removal & Installation), log set (see Secondary Installation - Log Set Installation), and the door.
9. Wait for the unit to warm up to operating temperature to ensure a proper and clean burning unit.

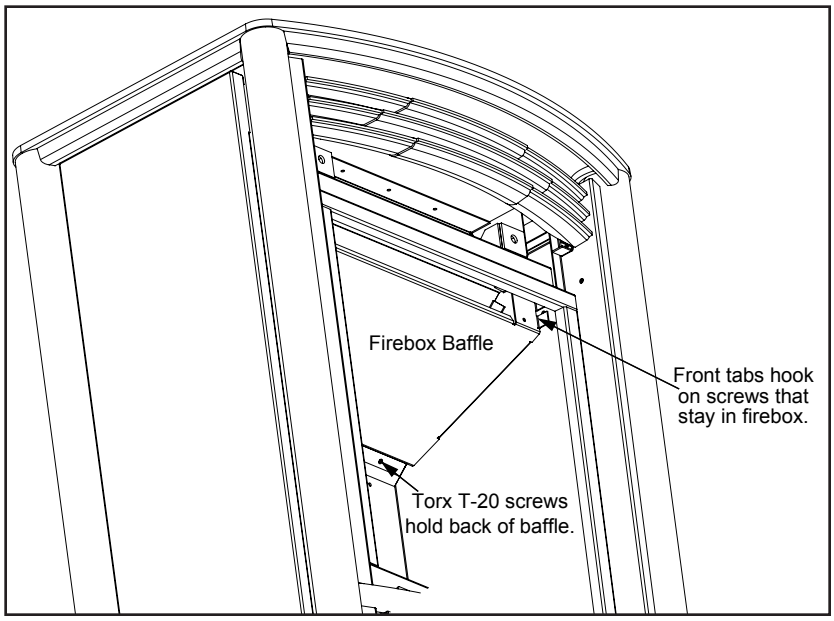

Figure 26: Firebox Baffle Installation.

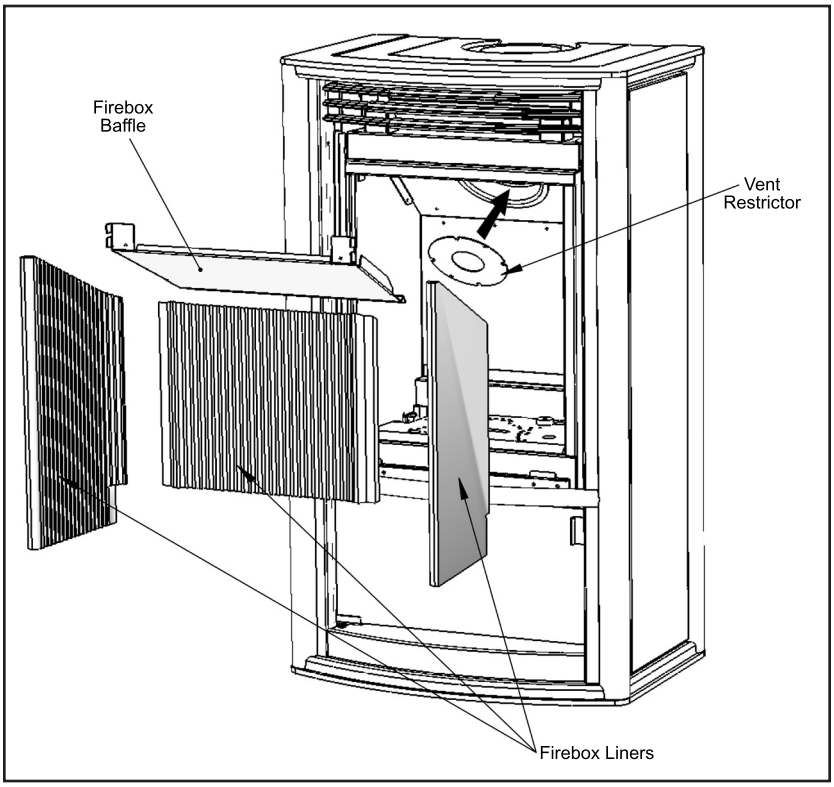

Figure 27: Flue Restrictor Installation.

Initial Installation

QUALIFIED INSTALLERS ONLY

Horizontal Installation:

1. Set the appliance in the desired location. Check to determine if wall studs or roof rafters are in the way when the venting system is attached. If this is the case, you may want to adjust the location of the appliance.

2. Direct vent pipe and fittings are designed with special twist-lock connections. Assemble the desired combination of black pipe and elbows to the appliance adapter with pipe seams oriented towards the wall or floor, as much out of view as possible.

Place a bead of Mil-Pac on the outer edge of the inner exhaust pipe (non-flared end). Place a bead of high temperature silicone on the male edge of the outer pipe. Push the pipe sections completely together, then twist-lock one section clockwise approximately ¼ turn, until the two sections are fully locked. The female locking lugs will not be visible from the outside, on black pipe. They may be located by examining the inside of the female ends as shown in Figure 28.

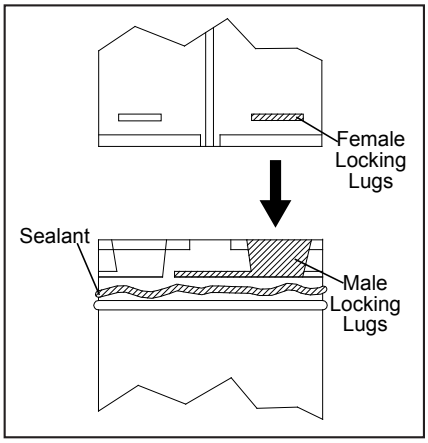

Figure 28: Twist-Lock Connection.

Notes:

(a) Twist-lock procedure: four (4) indentations, located on the female end of the pipes and fittings, are designed to slide straight onto the male ends of adjacent pipes and fittings, by orienting the four pipe indentations so they match and slide into the four entry slots on the male end.

(b) Horizontal runs of vent pipe must be supported every 36" (915mm). Wall straps are available for this purpose, also when running horizontal pipe minimum clearances to combustibles must be maintained; **2" (51mm) at top, 1½" (38mm) at sides, 1½" (38mm) at bottom.**

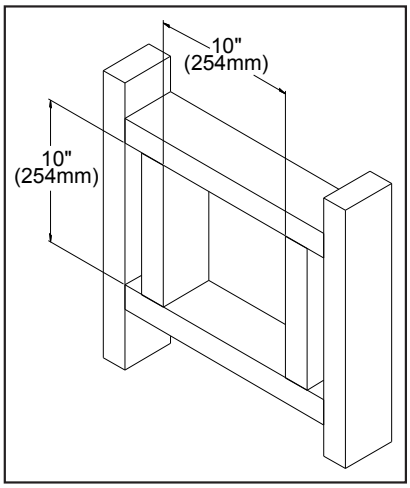

Figure 29: Wall Framing Hole for Horizontal Installation.

3. With the pipe attached to the stove in the correct location, mark the wall for a 10" (25.4cm) x 10" (25.4 cm) square hole (refer to Figure 29). The center of the square hole should match the center line of the horizontal pipe. Cut and frame the 10" (25.4cm) x 10" (25.4cm) hole in the exterior wall where the vent will be terminated. Refer to Figure 23 and Table 7. If the wall being penetrated is constructed of non-combustible material i.e. masonry or concrete, a 7" (17.8cm) hole is acceptable.

4. Position the horizontal vent termination in the center of the 10" (25.4cm) x 10" (25.4cm) hole, and attach to the exterior wall with the four screws provided. Before attaching the vent termination to the exterior

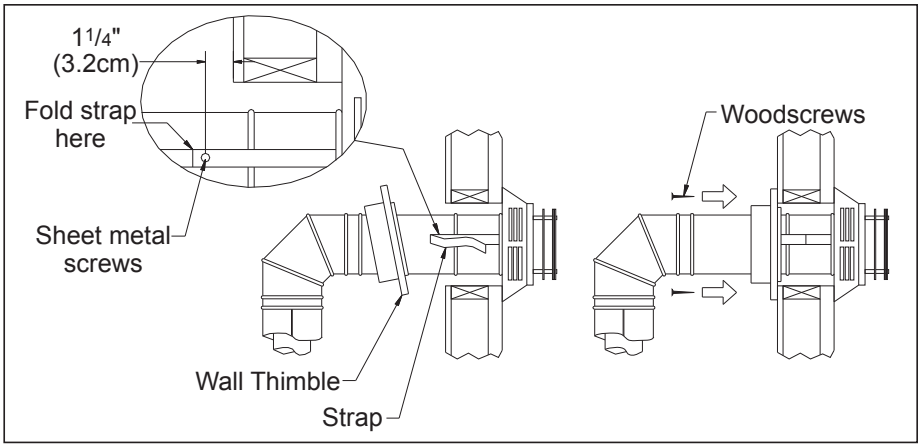

Figure 30: Installing Decorative Wall Thimble.

wall, run a bead of non-hardening mastic around the edges, so as to make a seal between the termination and the wall. The arrow on the vent termination should be pointing up, insure that the proper clearances to combustible materials are maintained.

5. Before connecting the horizontal run of the vent pipe to the vent termination, slide the black decorative wall thimble cover over the vent pipe.

6. Slide the appliance and vent assembly towards the wall, carefully inserting the vent pipe into the cap assembly. It is important that the vent pipe extend into the vent cap a sufficient distance with a minimum of 1¼" (3.2cm) overlap. Secure the connection between the vent cap pipe and the vent cap by attaching the two sheet metal straps extending from the vent cap assembly into the outer wall of the vent pipe. Use the two sheet metal screws provided to connect the straps to the vent pipe. Bend any remaining portion of the sheet metal straps back towards the vent cap, so the decorative wall thimble will conceal it (see left image in Figure 30).

7. Slide the decorative wall thimble up to the wall surface and attach with the screws provided. Apply decorative brass or chrome trim if desired (see right image in Figure 30).

NOTES:

(a) The four (4) wood screws provided should be replaced with the appropriate fasteners for stucco, brick, concrete, or other types of siding.

(b) For buildings with vinyl siding, a vinyl siding standoff, should be installed between the vent cap and the exterior wall (see Figure 31). Attach the vinyl siding standoff to the horizontal termination. The vinyl siding standoff prevents excessive heat from possibly melting the vinyl siding material. Note that the horizontal vent termination bolts onto the flat portion of the vinyl siding standoff (shaded area in Figure 31), so that an air space will exist between the wall and the vent termination.

(c) The horizontal run of vent pipe must be level and **should have a ¼ inch (6mm) rise for every one foot (305mm) of run towards the termination.** Never allow the vent to run downward. This could cause high temperature and may present the possibility of a fire.

(d) The location of the horizontal vent termination on the exterior wall must not be easily blocked or obstructed. Refer to Initial Installation - Vent Configurations and Restrictor Settings.

(e) When installing a vent pipe in a chase the minimum clearance to combustibles is 2" (51 mm).

(f) Maintain manufacturer's clearances to combustibles with venting.

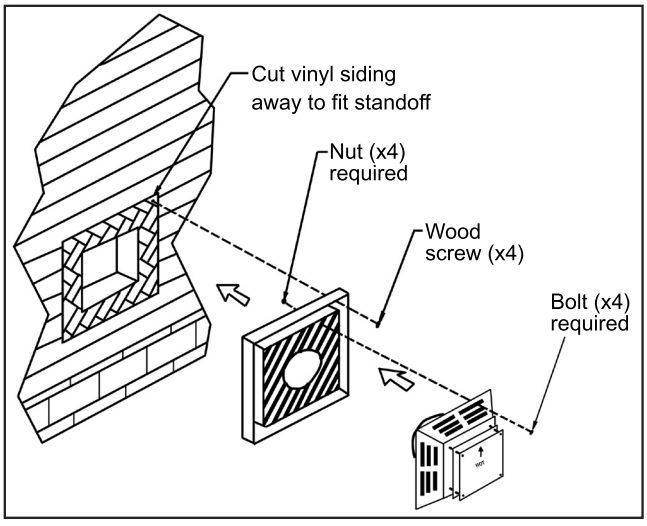

Figure 31: Installing Vent Cap with Vinyl Siding Stand-Off.

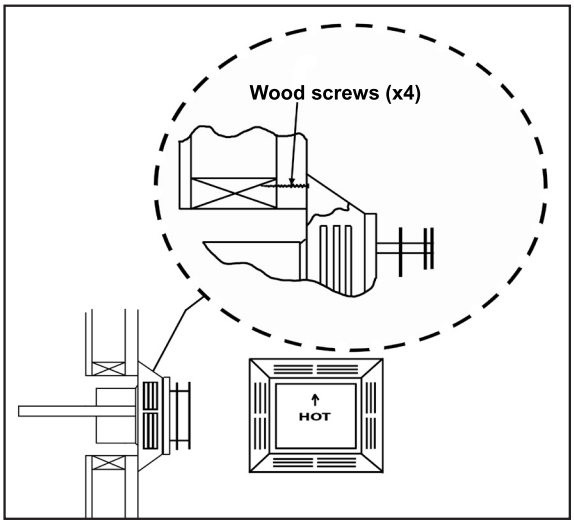

Figure 32: Installing Horizontal Vent Termination.

Initial Installation

QUALIFIED INSTALLERS ONLY

Vertical Installation:

1. Check the instructions for required clearances (air spaces) to combustibles when passing through ceilings, walls, roofs, enclosures, attic rafters, or other nearby combustible surfaces. Do not pack air spaces with insulation.

2. Set the gas appliance in the desired location. Drop a plumb bob down from the ceiling to the position of the appliance flue exit, and mark the location where the vent will penetrate the ceiling. Drill a small hole at this point. Next, drop a plumb bob from the roof to the hole previously drilled in the ceiling, mark the spot where the vent will penetrate the roof. Determine if ceiling joists, roof rafters, or other framing will obstruct the venting system. You may wish to relocate the appliance, or to offset, to avoid cutting load bearing members.

3. To install the Round Support Box/Wall Thimble in a flat ceiling, cut a 10" square hole in the ceiling, centered in the hole drilled in Step 2. Frame the hole as shown in Figure 33.

4. Assemble the desired lengths of black pipe and elbows necessary to reach from the appliance adapter up through the Round Support Box. Insure that all pipe and elbow connections are in their fully twist-locked position.

5. Cut hole in the roof centered on the small hole placed in the roof from Step 2. The hole should be of sufficient size to meet minimum requirements for Clearance to Combustibles, as specified. Continue to assemble lengths of pipe and elbows necessary to reach from the ceiling support box up through the roof line. Galvanized pipe and elbows may be utilized in the attic, as well as above the roof line. The galvanized finish is desirable above the roof line, due to the higher corrosion resistance.

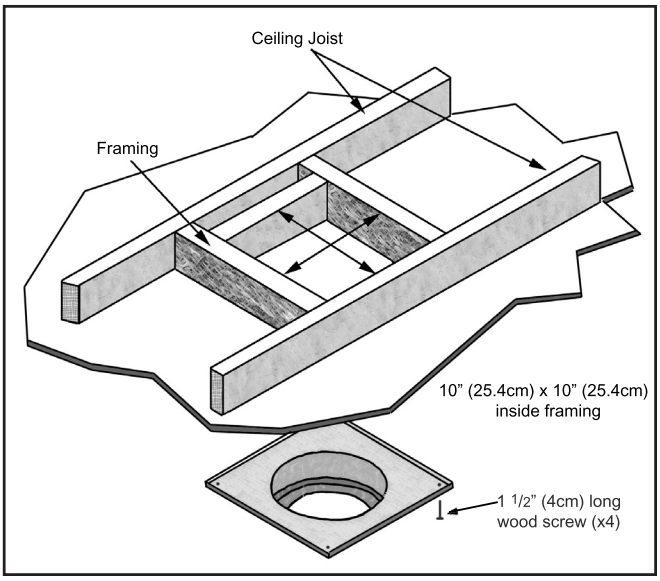

Figure 33: Wall Framing for Hole for Vertical Installation.

6. Once the pipe sections have been joined, and run up through the hole in the roof, slip an elbow strap over the exposed sections, bend the support straps outwards, and push the elbow strap down to the roof level, as shown in Figure 34. Tighten the clamp around the pipe section. Use a level to make sure the pipe is truly vertical. With roofing nails, secure the support straps to the roof. Seal the nails holes heads with non-hardening mastic. Trim the excess length of

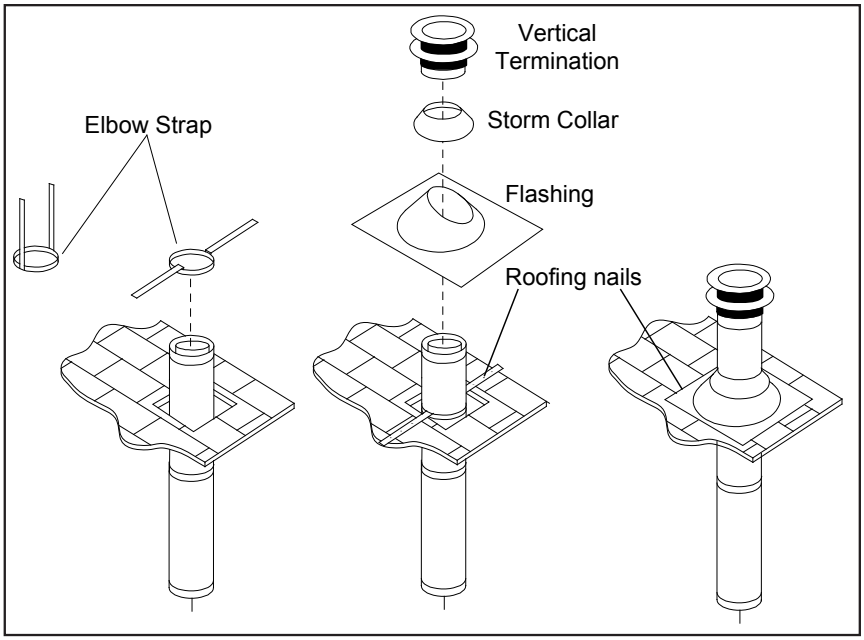

Figure 34: Vertical Vent Termination Installation.

the support straps that extend out beyond the edge of the flashing.

7. Slip the flashing over the pipe section protruding through the roof. Secure the base of the flashing to the roof with roofing nails. Use a non-hardening sealant between the uphill edge of the flashing and the roof. Insure the roofing material overlaps the top edge of the flashing as shown in Figure 34. Verify that you have at least the minimum clearance to combustibles at the roof line.

8. Continue to add pipe sections until the height of the vent cap meets the minimum code requirements. Refer to Figure 35 and Table 6. Note that for steep roof pitches, the vent height must be increased. In high wind conditions, nearby trees, adjoining roof lines, steep pitched roofs, and other similar factors can result in poor draft, or down drafting. In these cases, increasing the vent height may solve the problem.

9. Slip the storm collar over the pipe, and push it down to the top of the roof flashing as shown in Figure 34. Use the non-hardening sealant around the joint between the pipe and the storm collar.

10. Twist-lock the vent cap.

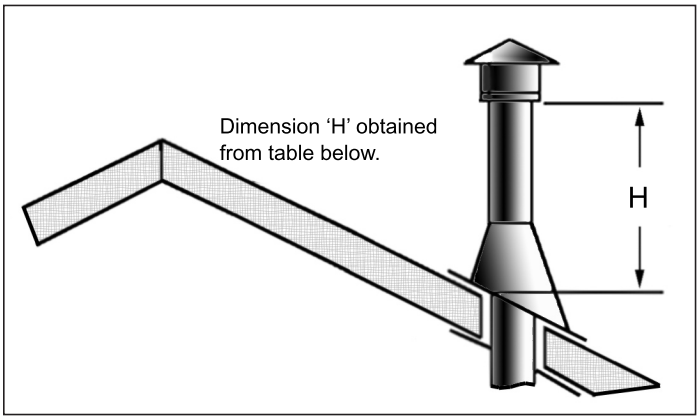

Figure 35: Height of Vertical Termination; Reference Table 8.

Table 8: Minimum 'H' for Figure 35.

Roof Pitch	Minimum Height	
	Feet	Meters
Flat to 7/12	1	0.3
Over 7/12 to 8/12	1.5	0.46
Over 8/12 to 9/12	2	0.61
Over 9/12 to 10/12	2.5	0.76
Over 10/12 to 11/12	3.25	0.99
Over 11/12 to 12/12	4	1.22
Over 12/12 to 14/12	5	1.52
Over 14/12 to 16/12	6	1.83
Over 16/12 to 18/12	7	2.13
Over 18/12 to 20/12	7.5	2.29
Over 20/12 to 21/12	8	2.44

NOTES:

(a) If an offset is necessary in the attic to avoid obstructions, it is important to support the vent pipe every 3 feet (91 cm), to avoid excessive stress on the elbows, and possible separation. Wall straps are available for this purpose (see Figure 36).

(b) When ever possible, use 45° degree elbows instead of 90° degree elbows. The 45° degree elbow offers less restriction to the flow of flue gases and intake air.

(c) For multi story installations. A ceiling firestop is required at the second floor, and any subsequent floors (see Figure 37). The opening should be framed to 10" (25.4 cm) x 10" (25.4 cm) inside dimensions, in the same manner as shown in Figure 33.

(d) Any occupied areas above the first floor, including closets and storage spaces, which the vertical vent passes through, must be enclosed. The enclosure may be framed and sheet rocked with standard building materials. However consult the appliance manufactures installation instructions for the minimum allowable clearance between the outside of the vent pipe, and the combustible surfaces of the enclosure. Do not fill any required air spaces with insulation.

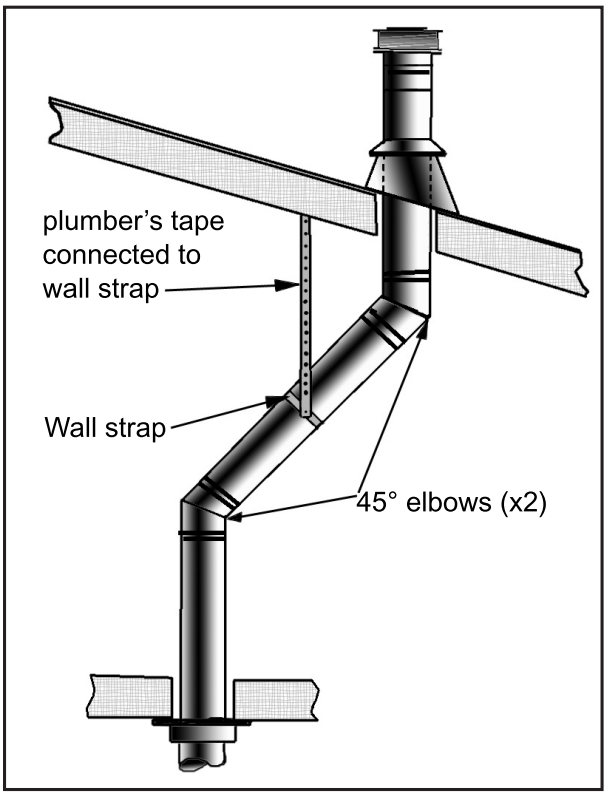

Figure 36: Use of Wall Straps.

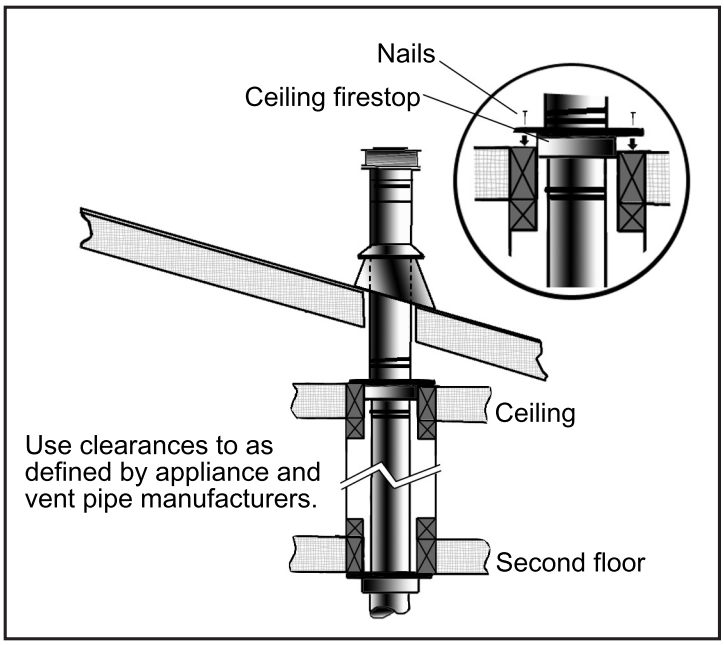

Figure 37: Multi-Story Vent Pipe Installation.

Cathedral Ceiling Installation:

1. Follow installation steps 1 & 2 under Initial Installation - Vertical Installation.
2. Using the plumb bob, mark the centerline of the venting system on the ceiling and drill a small hole through the ceiling and roof at this point. From the roof, locate the drill hole and mark the outline of the "Cathedral Ceiling Support Box".
3. Remove shingles or other roof coverings as necessary to cut the rectangular hole for the "Support Box". Cut the hole ⅛" larger than the "Support Box" outline.
4. Lower the "Support Box" through the hole in the roof until the bottom of the "Support Box" protrudes at least 2 inches (5 cm) below the ceiling. Align the "Support Box" both vertically and horizontally with a level as shown in Figure 38 Temporarily tack the "Support Box" in the place through the inside walls and into the roof sheathing.

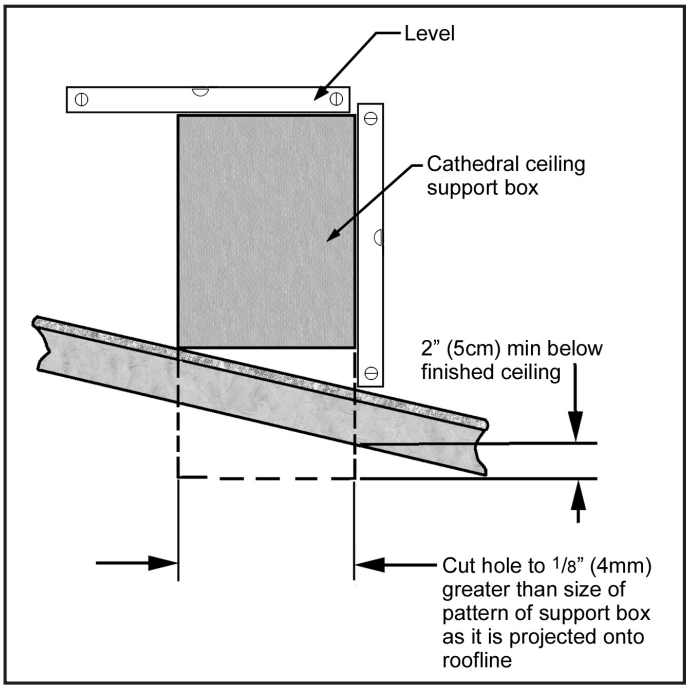

Figure 38: Cathedral Ceiling Support Box Leveling.

5. Using tin snips, cut the "Support Box" from the top corners down to the roof line, and fold the resulting flaps over the roof sheathing (Figure 39). Before nailing it in to the roof, run a bead of non-hardening mastic around the top edges of the "Support Box", to make a seal between the box and the roof. Clean out any combustible material from the inside of the "Support Box".
6. Complete the cathedral ceiling installation by following the same procedures outlined in Steps 4 through 9 for Initial Installation - Vertical Installation.

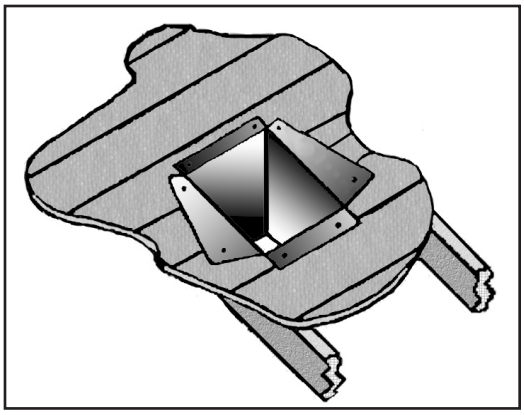

Figure 39: Cathedral Ceiling Support Box Installation.

Corner Installations:

Do not interfere with the structural integrity of the walls.

For installations with a 36" (915 mm) snorkel refer to Figure 40 and Initial Installation - Vent Configurations and Restrictor Settings. For other corner installations refer to Figure 41 and Initial Installation - Vent Configurations and Restrictor Settings.

Also refer to Initial Installation - Clearances to Combustibles.

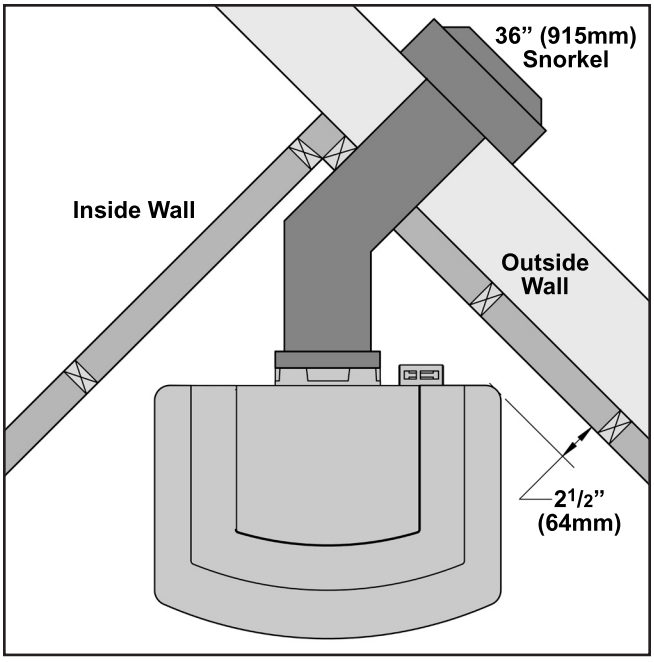

Figure 40: Corner installation rear vented with snorkel.

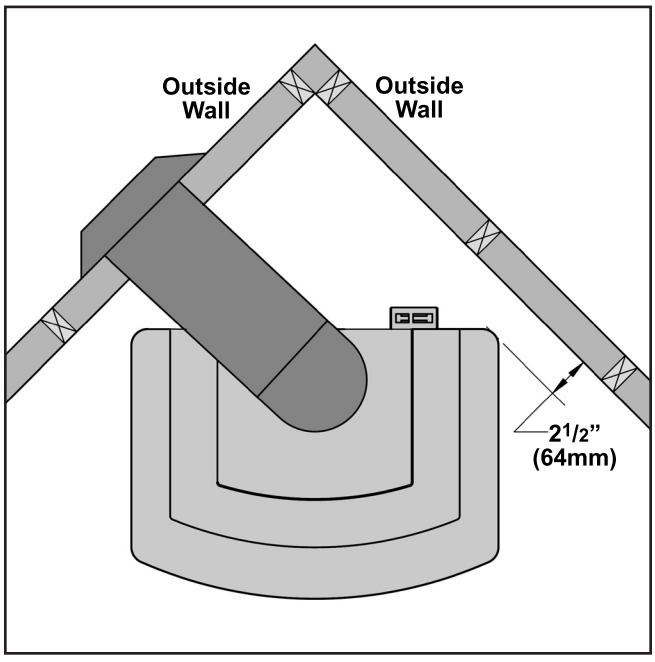

Figure 41: Corner installation top vented.

Initial Installation

QUALIFIED INSTALLERS ONLY

Converting Top Vented into Rear Vented:

This unit has been shipped as a 33,500 Btu/hr top-vented freestanding unit. This unit can be converted to a rear vented unit for use with a 36" (915 mm) snorkel. Also refer to Initial Installation - Installation of Rear Vented Appliance.

1. Carefully remove the trivet and the stovetop. Place on a soft surface as not to damage the finish.
2. Remove the four (4) ¼" screws that hold the flue collar elbow to the unit body.
3. Carefully remove the elbow being sure not to damage the gasket that is glued to the flue collar elbow, it seals the flue to the firebox (see Figure 42).
4. Turn the elbow 180° to the rear vent position and re-fasten with the screws removed in step 2.

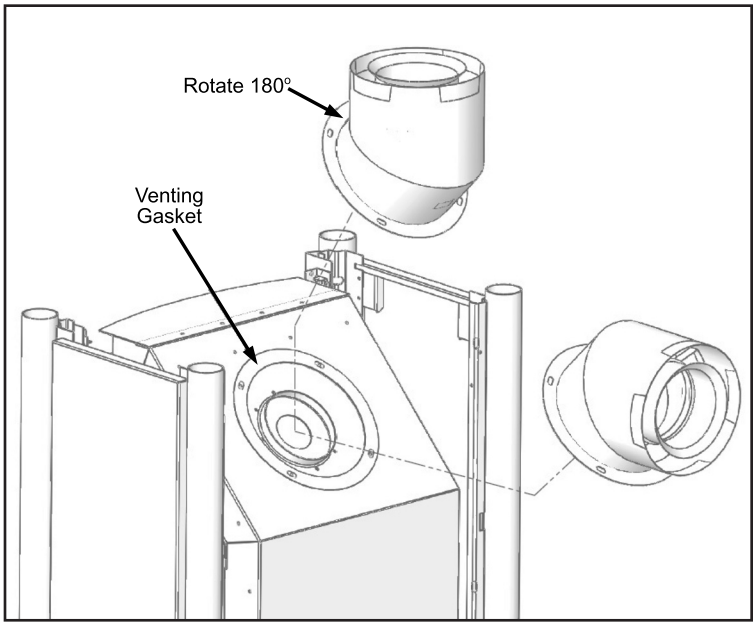

Figure 42: Converting Top Vented into Rear Vented.

Installation of Rear Vented Appliance:

Place the unit into position.

Attach a small section of pipe on the unit and mark exterior wall where vent would pass through the wall.

Cut a 10" (25.4 cm) minimum hole in the wall to maintain clearances to combustibles. Frame hole as shown in Figure 29.

Install a wall thimble, interior finished collar, and the vent section through the wall.

THIS UNIT MUST BE VENTED WITH A 36" (91 cm) SNORKEL KIT.

Seal around the vent terminal to the structure using a non-hardening mastic.

Also refer to Initial Installation - Vent Configurations and Restrictor Settings and Initial Installation - Horizontal Installation.

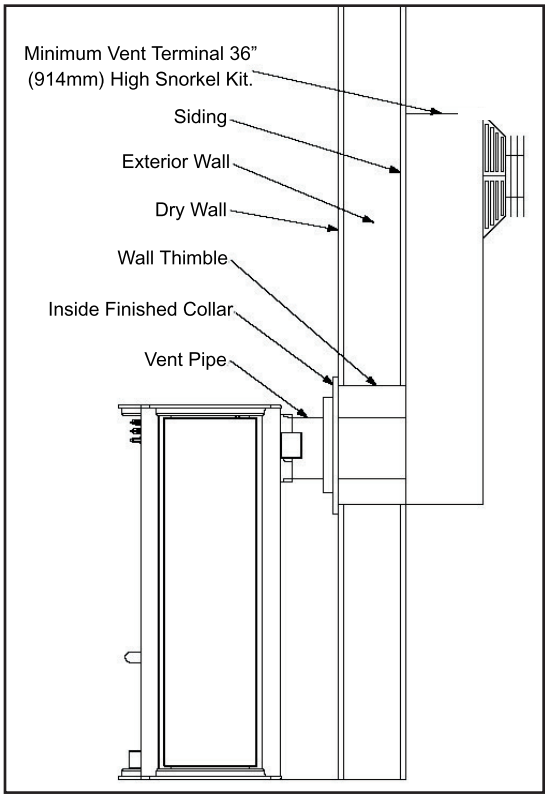

Figure 43: Installation for Rear Vented; 33,500 Btu/hr.

Initial Installation

QUALIFIED INSTALLERS ONLY

Installation of Top Vented; Horizontal Termination:

This is the most common type of installation style.

Set the unit in place.

Install a minimum 24" (61cm), although 36" (91.5cm) or more vertical vent length recommended.

Install a 90° elbow, and mark the exterior wall where the vent would pass through.

Cut a 10" (25.4 cm) minimum hole in the wall to maintain clearances to combustibles around vent pipe. Frame the hole as shown in Figure 29.

Install wall thimble, interior finished collar, the vent section through the wall, and then install the vent termination.

Seal around the termination using a non-hardening mastic.

Also refer to Initial Installation - Vent Configurations and Restrictor Settings and Initial Installation - Horizontal Installation.

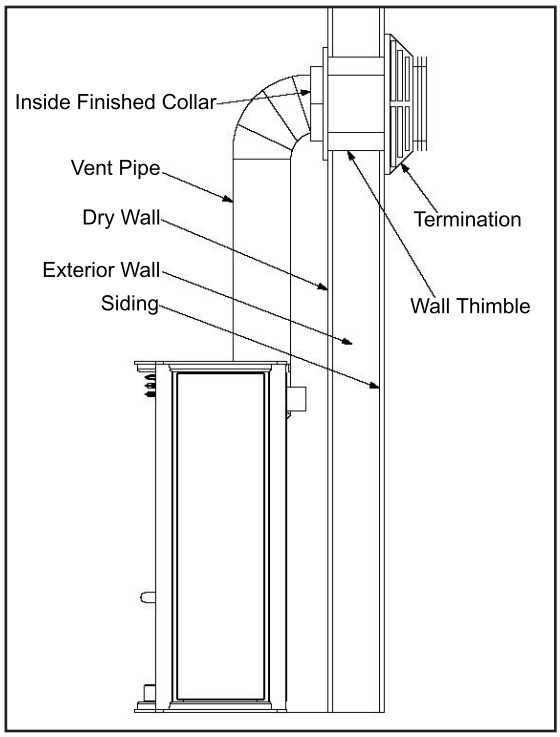

Figure 44: Installation for Top Vented; Horizontal Termination.

Installation of Top Vented; Vertical Termination:

Place the unit in place.

Drop a plumb bob from the ceiling to the center point of the flue outlet.

Cut a 10" (25.4 cm) hole in the ceiling and the roof. Refer to Figure 33.

Install the ceiling support and insulation guard.

Install the roof flashing. Ensure that the roof flashing is installed under the roofing material so that a watertight seal is created.

Install the flue pipe from the top of the unit through the roof.

Ensure that all flue pipe and unit maintain required clearances to combustibles.

Also refer to Initial Installation - Vent Configurations and Restrictor Settings and Initial Installation - Vertical Installation.

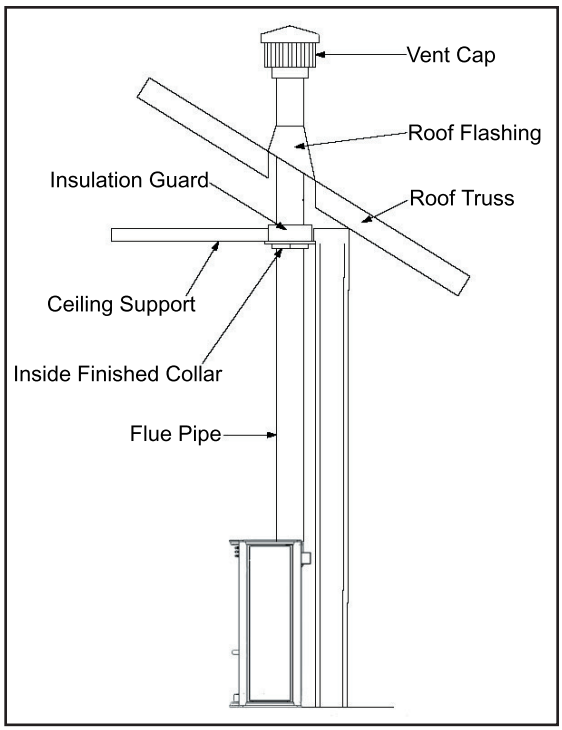

Figure 45: Installation for Top Vented; Vertical Termination.

Initial Installation

QUALIFIED INSTALLERS ONLY

Gas Line Connection and Testing:

WARNING: Only persons licensed to work with gas piping may make the necessary gas connections to this appliance.

GAS LINE CONNECTION

- This stove is equipped with a certified flexible pipe located on the right side of the unit terminating in a ⅜" male NPT fitting. Consult your local authorities codes or the CAN/CGA B 149 (1 or 2) installation code in Canada, or in the USA gas installations follow either local codes or the current edition of the National Fuel Gas Code ANSI Z223.1.

- The efficiency rating of this appliance is a product of the thermal efficiency rating determined under continuous operating conditions and was determined independently of any installed system.

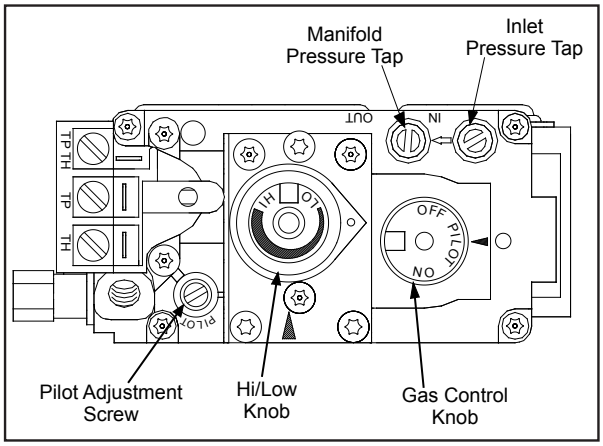

Figure 46: Fully Labeled Gas Valve.

The appliance and its shutoff valves must be disconnected from the gas supply piping system during any pressure testing where the pressure exceeds ½ PSIG (3.45 KPa) or damage will occur to the valve.

The appliance must be isolated from the gas supply piping system by closing its individual manual shutoff valve during any pressure testing of the gas supply piping system at test pressures equal to or less than ½ psig (3.45 KPa).

Always check for gas leaks with a soap and water solution after completing the required pressure test.

TO TEST VALVE PRESSURES

The pressure taps are located on the left side of the valve

- Turn set screw 1 turn counter clockwise to loosen,
- Place 5/16" (8 mm) I.D. hose over pressure tap system.
- Check pressures using a manometer.
- When finished, release pressure, remove hose & tighten set screw.

Table 9: Pressure and BTU Information.

	Natural Gas	Propane
Main Burner	PO512-37 DMS	PO512-1/16"
Manifold Pressure	3.8" W.C. / 0.95KPa	11.0" W.C. / 2.7KPa
Min. Manifold Pressure	1.1" W.C. / 0.27KPa	2.9" W.C. / 0.72KPa
Max Supply Pressure	7.0" W.C. / 1.74KPa	13.0" W.C. / 3.28KPa
Min. Supply Pressure	5" W.C. / 1.24KPa	12.0" W.C. / 2.98KPa
Max BTU/hr Input	33,500 BTU/hr (9.82KW)	33,500 BTU/hr (9.82KW)
Min. BTU/hr Input	18,000 BTU/hr (5.28 KW)	18,000 BTU/hr (5.28KW)
Venturi Setting	¼" min.	Completely Open

NEVER USE AN OPEN FLAME FOR LEAK TESTING.

Initial Installation

QUALIFIED INSTALLERS ONLY

Electrical Requirements For Gas Valve and Optional Blower:

The **ENVIRO** CARA will operate without electrical power. This model has a millivolt gas control, which uses the pilot flame to generate enough electricity to operate the main burners. The appliance, when equipped with a blower, must be electrically connected and grounded in accordance with local codes or in the absence of local codes, with the current CSA C22.1 CANADIAN ELECTRICAL CODE Part 1, SAFETY STANDARDS FOR ELECTRICAL INSTALLATIONS, OR THE NATIONAL ELECTRICAL CODE ANSI / NFPA 70 in the U.S. When installing the Optional Remote Control System for the valve and the blower, refer also to the Remote Controls section, and to Figure 4.

Table 10: Recommended Thermostat Wire Size.

Wire Size	Max. Length
14 gauge	100 ft (30.48 m)
16 gauge	60 ft (18.29 m)
18 gauge	40 ft (12.00 m)
20 gauge	25 ft (7.62 m)
22 gauge	18 ft (5.49 m)

CAUTION: Label all wires prior to disconnection when servicing controls. Wiring errors can cause improper and dangerous operation. Verify proper operation after servicing.

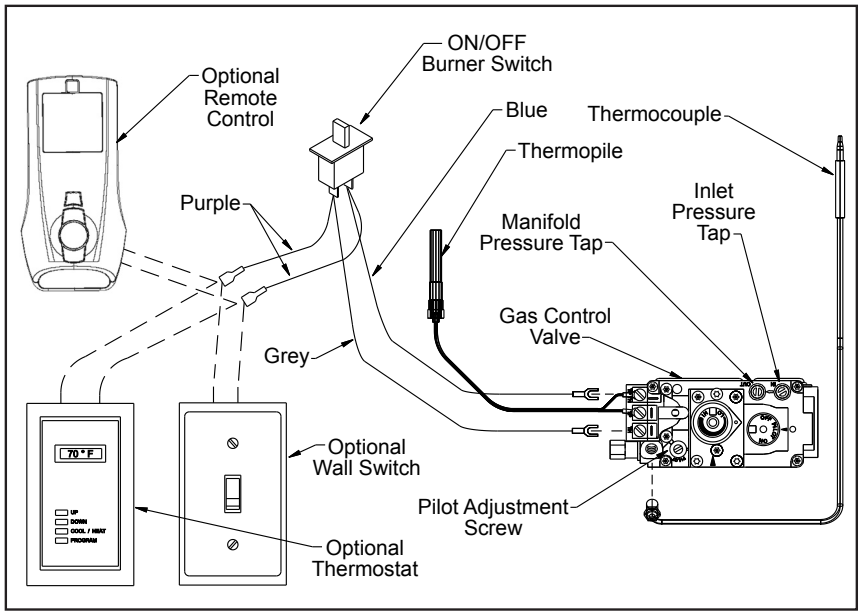

Figure 47: Gas Control Valve and Optional Thermostat Wiring.

WARNING: Electrical grounding instructions. This appliance is equipped with a three-prong (grounding) plug for your protection against shock hazard, and must be plugged directly into a properly grounded three-prong outlet.

DO NOT cut or remove the grounding prong from this plug.

ELECTRICAL INFORMATION:

Canadian Installations

The venting system must be installed in accordance with the current CSA B149 installation code and/or local codes having jurisdiction.

U.S.A. Installations

The venting system must be installed in accordance with the current National Fuel Gas Code, ANSI Z223.1, and/or local codes having jurisdiction.

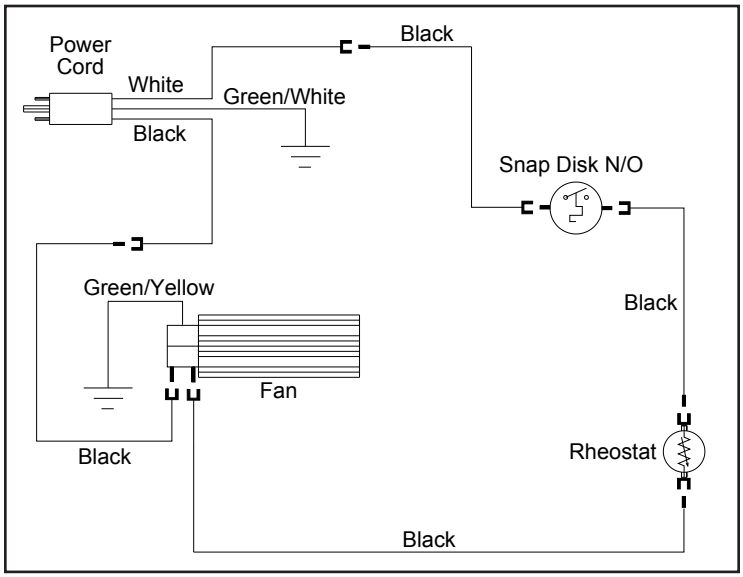

Figure 48: Wiring Diagram for Electric Fan.

Installation of Optional Blower:

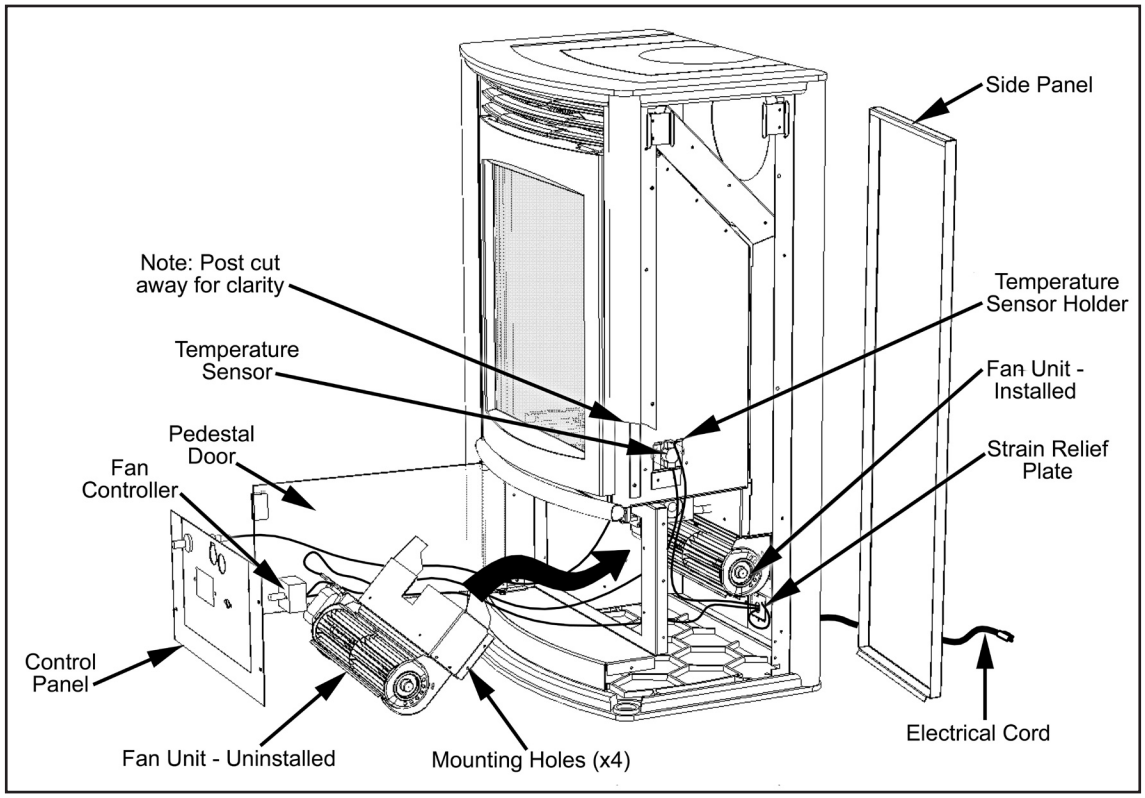

Figure 49: Optional Blower (Fan) Installation.

1. Remove the pre-assembled blower from the packaging. Inspect the blower for damage. If damage is noticed call your dealer, distributor or courier company and have components replaced.
2. Remove the side panel by pulling the panel up, slide the panel out of the bottom slots, and set aside.
3. Install the temperature sensor into the holder.
   IMPORTANT: The temperature sensor must be in contact with the firebox.
4. Open the pedestal door and remove the four (4) T-20 screws holding the Control Panel in place.
5. Fit the Fan Unit into the cabinet being careful to work around the gas and pilot lines. The fan will fit up behind the gas valve. With an extension driver, fasten the Fan Unit in place with four (4) T-20 screws provided.
6. Install the Fan Controller into the provision in the Control Panel.
7. Install the Strain Relief plate into the stove back by fitting the tab on the plate into the stove back and secure the plate with a T-20 screw provided.
8. Plug in all the electrical connections as indicated in Figure 48. This includes the Fan Controller, Temperature sensor and Fan Unit.
9. Using the provided T-20 screw, located on the right mount below and behind the Temperature Sensor, fasten the wire tie supplied. With the wire tie capture the fan wires including the temperature switch wires, this will secure the wires and route them away from hot surfaces and out of the way of the fan blades
10. Re-install the Control Panel and Side Panel.
11. Plug the fan assembly into the wall outlet and turn the unit on to ensure fan operation.

Secondary Installation

Installation of Log Set:

The placement of the logs is not arbitrary. If they are positioned incorrectly, the flames can be "pinched" and will not burn correctly. The burner has four (4) pins and four (4) ledges which make alignment easier. Using the pictures provided, carefully set the logs in place.

NOTE: The logs are fragile and should be handled gently.

1. Carefully remove logs from box and check there is no damage. It is very important to install all logs in their proper position to ensure safe, optimum operating conditions.
2. Place the Left Rear Log Chunk on the two (2) left rear pins and the Right Rear Log Chunk on the two (2) right rear pins (refer to Figures 50 and 51).
3. Place the bottom of the "Y" Log in the ledge at the front left of the burner and the top of the log rests on the Right Rear Log Chunk as shown in Figure 51 and 52.
4. Place the bottom of the Right Log in the ledge at the front right of the burner and rest the top of the log against the rear panel as shown in Figure 52 and 53.

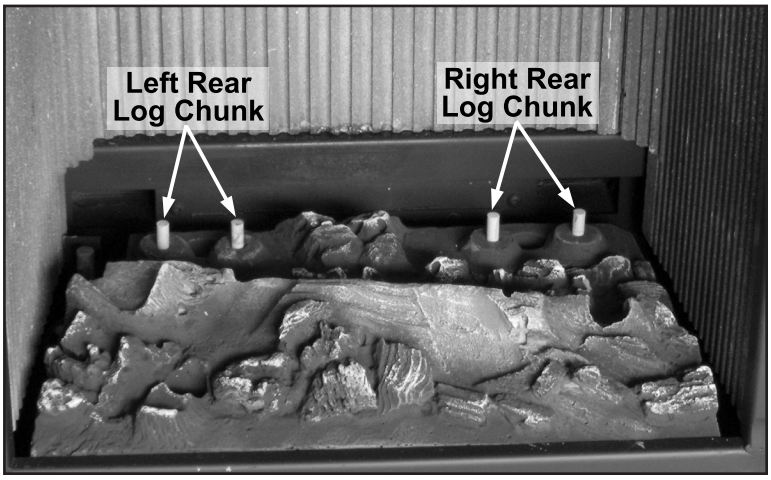

Figure 50: Log Placement of Rear Log Chunks.

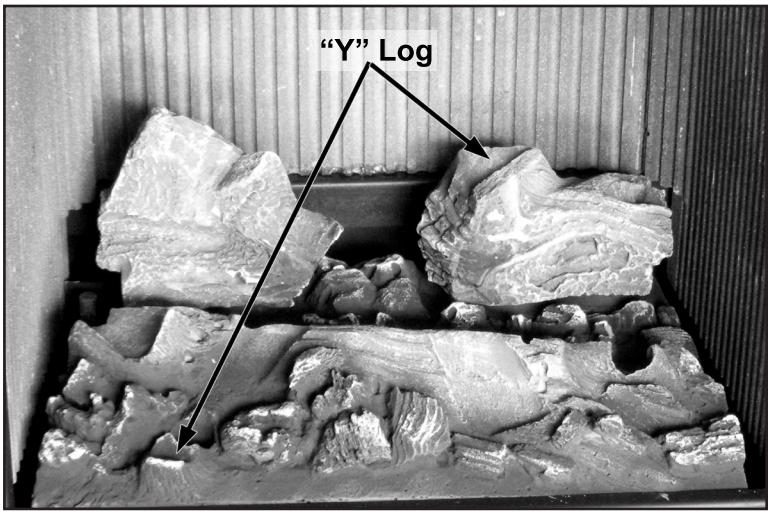

Figure 51: Log Placement of "Y" Log.

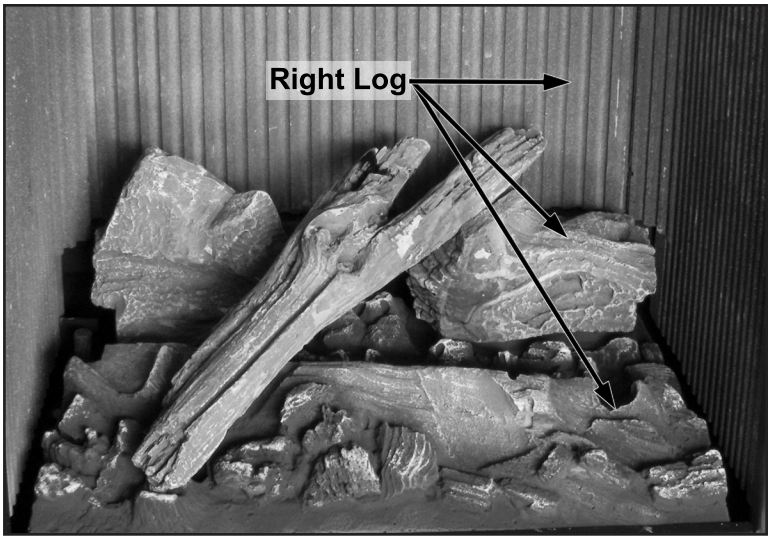

Figure 52: Log Placement of Right Log.

5. Place the bottom of the Left Log in the ledge at the front left of the burner and rest the middle of the log against the Left Rear Log Chunk as shown in Figure 53 and 54.

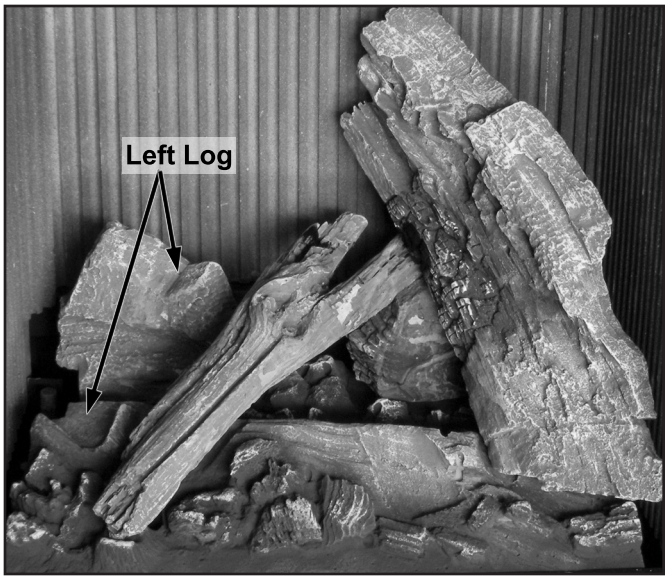

Figure 53: Log Placement of Left Log.

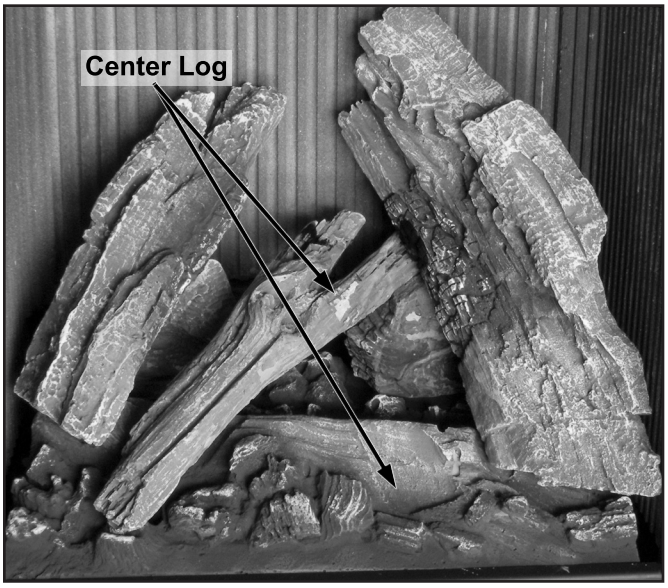

Figure 54: Log Placement of Center Log.

6. Place the bottom of the Center Log in the ledge at the front center of the burner and rest the middle of the log against the top of the "Y" Log as shown in Figure 54 and 55.

7. Check that the log set is laid out as shown in Figure 55 and install door.



Figure 55: Log Placement Complete.

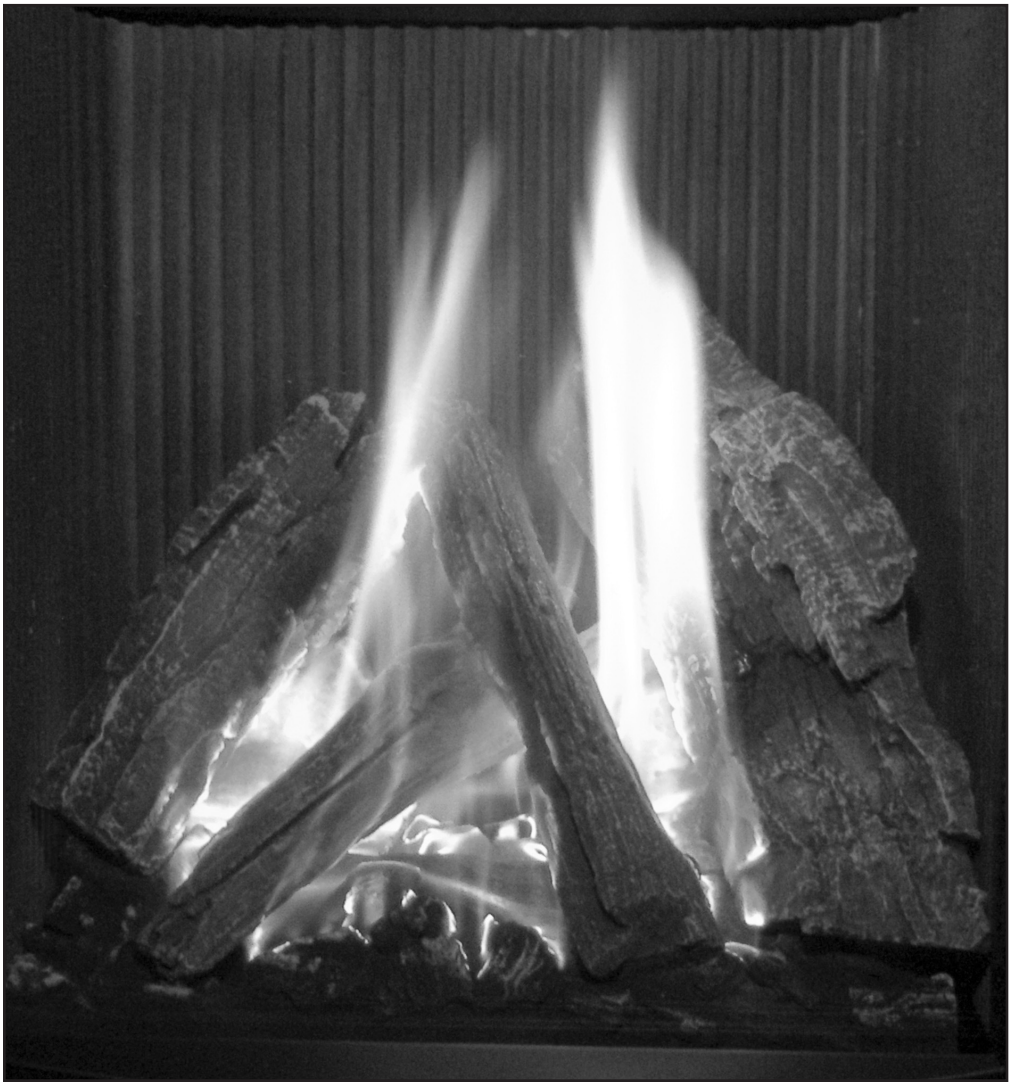

Figure 56: Cara with a Good Flame.

CAUTION: NEVER OPERATE THIS APPLIANCE WITH THE GLASS DOOR REMOVED.

Important note: When the unit is turned on for the first time, it should be turned onto high without the fan on for the first four (4) hours. This will cure the paint, logs, gasket material and the other products used in the manufacturing process. It is advisable to open a window or door, as the unit will start to smoke and can irritate some people. After the unit has gone through the first burn turn the unit off including the pilot, let the unit get cold then remove the glass door and clean it with a good gas fireplace glass cleaner, available at your local ENVIRO dealer.

See Maintenance And Service on how to remove door to clean glass.

Secondary Installation

Installation of Ceramic Firebox Liner (Optional):

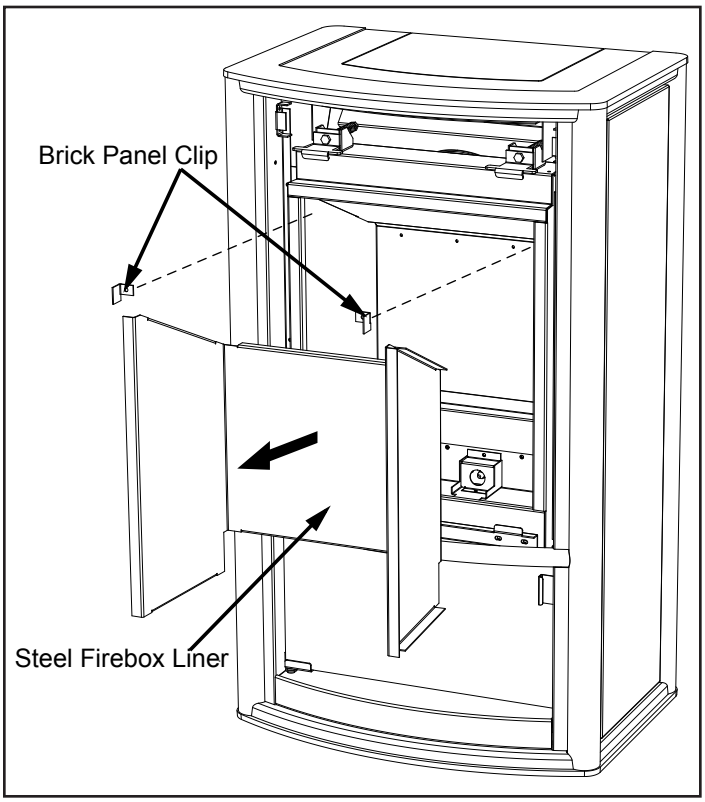

Figure 57: Steel Firebox Liners Installation.

Do not install when the unit is hot.

The firebox liner is fragile. Handle liners with care and avoid knocking them on any object.

The Enviro Cara comes with a Steel Firebox Liner installed, which must be removed if a Ceramic Firebox Liner is to be installed.

1. Remove the glass door as shown in the Maintenance and Service - Glass Door Removal.
2. Carefully remove the log set.
3. Slide the burner tray back just far enough so the front edge of the burner does not catch on the front lip of the firebox. Lift the front of the burner up and out of the firebox.
4. Using a T-20 screwdriver, remove the left and right Brick Panel Clips
5. Remove the Steel Firebox Liner by pulling the left side of the panel in towards the center of the unit then out a little. Repeat for the right side then pull the panel completely out.
6. Install the rear ceramic liner by placing it against the back of the firebox. The top of the liner has an angled edge, the bottom does not. Note: The Firebox Baffle must be in place for the Firebox Liners to be installed.
7. While holding the rear ceramic liner from falling forward, install the left and right liners by sliding them in against the sides of the firebox and up to the rear liner (refer to Figure 58).
8. Attach and tighten the brick panel clips with the screws provided. The side liners hold the rear liner in place.
9. Re-install the burner (see Maintenance and Service - Burner Removal & Installation), log set (see Secondary Installation - Log Set Installation), and the door.

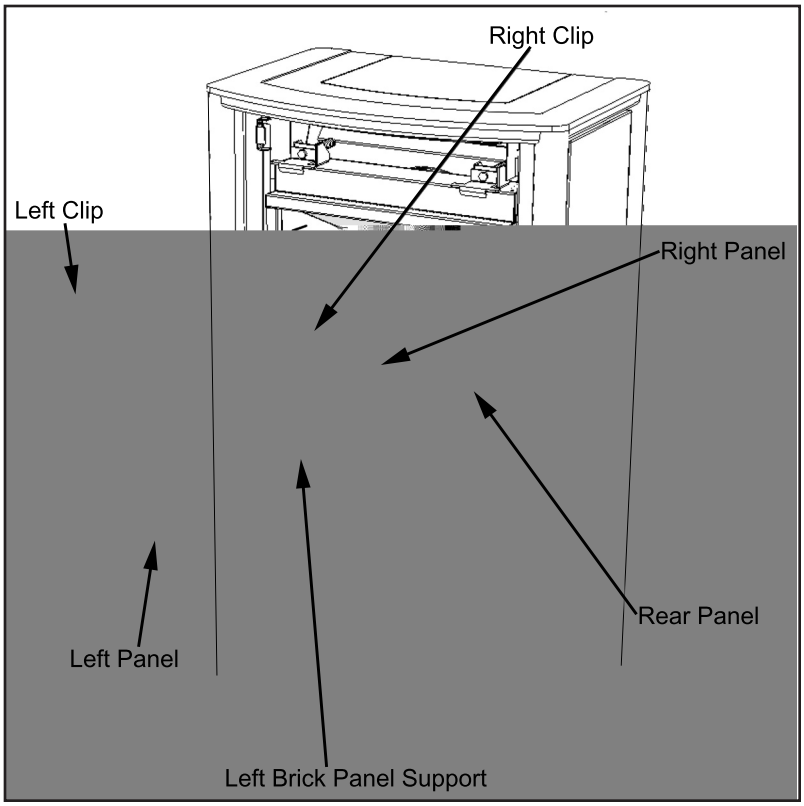

Figure 58: Firebox Liners Installation.

Trouble Shooting

Problem	Possible Cause	Solution
The main burner does not ignite when called for.	The gas valve may not be on.	• Check that the gas control knob is in the "ON" position.
	Thermostat is not calling for heat.	• Adjust the thermostat several degrees above ambient temperature.
	Problem with gas valve.	• Use a DC voltmeter to measure the voltage across the TPTH and TP terminals. Main operator voltage: Open circuit ≥ 325mV Closed circuit ≥ 100mV • If voltage is not present, check the control circuit for proper operation. • If proper control system voltage is present, replace the gas control.
Spark will not light the pilot after repeatedly pressing the spark ignitor.	Defective piezo ignitor.	• Check connections to ignitor. • If ignitor connections are good but no spark, replace ignitor.
	Broken spark electrode.	• Check for broken ceramic insulation, replace electrode if broken.
	Misaligned spark electrode.	• If spark is not arcing from electrode to pilot, loosen the screws on the pilot base adjust and tighten.
Pilot will not remain lit.	Problem with thermocouple circuit.	• Check for proper connection of the thermocouple to the rear of the valve. If loose, fully tighten. • Check pilot for full flame impingement around thermocouple. If flame is too small, check gas pressure, adjust pilot rate screw, check pilot head for damage. • Check thermocouple voltage at valve. It must be greater than 5 mV. If low, replace thermocouple.
	Air in gas line (pilot dies while knob is depressed).	• Bleed line. • Check gas line pressure. • Contact dealer.
Burners will not remain lit.	Problem with thermopile circuit.	• Check gas line pressure . • Check for flame impingement on thermopile. If low, see "Pilot will not remain lit". • Check thermopile for minimum of 300 mV when burner is switched on. • Check wiring to thermostat for breaks.
Flame lifting	Leak in vent pipe	• Check for leaks in vent connections.
	Improper vent configuration	• Check vent configuration with manual.
	Terminal may be recirculating flue gases	• Check to see if terminal is on correctly. • May need to install high wind termination cap. • Contact dealer.
Glass fogs up	Normal Condition: after the appliance warms up the glass will clear. **Due to additives in gas, glass may get hazy during operation** Clean as needed.	
Blue Flames	Normal during start up: flames will yellow as the fireplace heats up.	
Flames are burning "dirty" or sooting	Flame impingement	• Check log positioning. • Increase primary air by opening the venturi shutter and/ or by opening the vent restrictor. See also "Burners will not remain lit."
Remote control doesn't work	Problem with the remote	• One or more of the batteries are dead. See remote control instructions.
	Problem with fireplace	• The on/off switch is turned to OFF. • The gas control valve is turned to PILOT or OFF. • The pilot has gone out.

Parts List

Reference Number	Part Description	Part Number
1	120°F (49°C) Ceramic Fan Temperature Sensor	EC-001
	Thermopile	EC-012
2	S.I.T. Piezo Igniter	EC-023
	Domestic Power Cord - 115V	EC-042
	Heyco Strain Relief	EC-044
3	Convection Blower (Fan) - 115V	EC-069
3	Cara Fan Kit	50-1545
4	Fan Controller with Knob - 115V	EF-045
	Dual Bulb Door Gasket - 10 ft (3.05m)	50-634
5	S.I.T. Nova Valve Convertible	50-1421
5	S.I.T. Valve Conversion Screw with O-ring	50-1450
5	S.I.T. Valve Conversion Screw Cap	50-1451
5	Cara Valve Tray Assembly	50-1604
6	Cara Firebox Liner - Ceramic	50-1546
7	Cara Log Set & Burner	50-1563
	Cara Rock Set & Burner	50-1564
	Cara Log Set Only	50-1600
	Cara Rock Set Only	50-1601
7	Cara Log Set Burner Only	50-1602
	Cara Rock Set Burner Only	50-1603
	Cara Conversion Kit LP to NG Convertible	50-1591
	Cara Conversion Kit NG to LP Convertible	50-1592
8	Cara Door Assembly	50-1593
8	Cara Glass with Gasket - 14½" x 16¾" (368mm x 425mm)	50-1613
9	Cara Door Latch Assembly	50-1594

Parts List

Reference Number	Part Description	Part Number
10	Cara Firebox Baffle	50-1595
11	Cara Main Orifice NG (PO512-37)	50-1596
11	Cara Main Orifice LPG (PO512-1/16”)	50-1597
12	Cara Flue Outlet Elbow & Gasket	50-1598
12	Cara Flue Outlet Gasket Only	50-1599
13	Cara PSE Pilot Assembly (PSE-C3-505)	50-1605
13	Cara PSE Thermocouple (#019G)	50-1612
14	Cara Cast Insert Rear Vent	50-1606
15	Cara Cast Insert Top Vent	50-1607
16	Cara Cast Stove Top	50-1608
17	Cara Cast Louvers	50-1609
18	Cara Cast Stove Bottom	50-1610
	Cara Leveling Legs (Set of 4)	50-1611
19	Cara Vent Restrictor - Set of 4 (50%, 60%, 70%, 75%)	50-1616
20	Pedestal Glass Door Assembly with Magnet Brackets	50-1621
21	Cabinet Side Left and Right	50-1622
22	Cabinet Side Hangers (Set of 4)	50-1623
23	Louver Brackets Left and Right	50-1624
24	Cara Firebox Liner - Steel	50-1627
	Cara Owner Manual	50-1630
25	Cara Stove Back	50-1707
26	Cara Burner Switch	50-1617
26	Cara Switch Box	50-1708
27	Cara Pedestal Door Magnet	50-1709
28	Cara Control Panel	50-1710

Parts Diagram

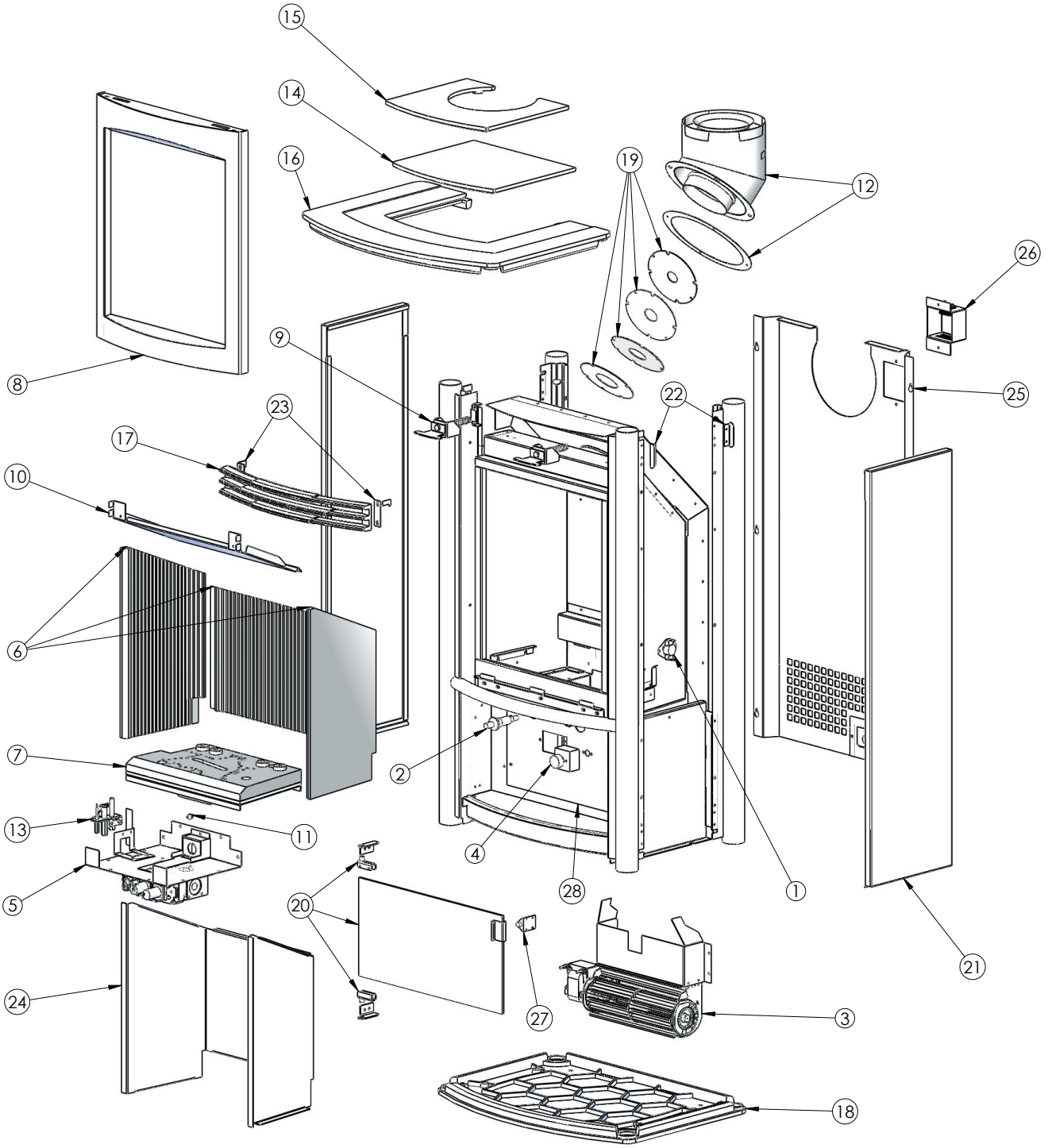

Warranty

Sherwood Industries Ltd. is the manufacturer of the VistaFlame line of heating products. At Sherwood Industries, our commitment to the highest level of quality and customer service is the most important thing we do. Each VistaFlame stove is built on a tradition of using only the finest materials and is backed by our Exclusive Lifetime Limited Warranty to the original purchaser. With Enviro, you're not just buying a fireplace or stove, you're buying a company with years of unequalled performance and quality.

Limited Lifetime Warranty:

Under this warranty, Sherwood Industries Ltd. covers the fireplace or stove body and accessories against defects in materials and workmanship, for part repair or replacement for the first seven (7) years and limited labour for the first two (2) years to the original purchaser. This Warranty covers: Firebox, Heat Exchanger, Steel Firebox Panels, Ceramic Logs & Panels, Burner, Ceramic Glass, Pedestals, Panels and Legs. Please see the exclusions and limitation section below as certain restrictions and exclusions apply to this warranty.

Limited Two (2) Year Warranty:

Under this warranty, Sherwood Industries Ltd. covers: Gas Assembly, Blower, Blower control, Temperature Sensors and Wire Harness against defects in materials and workmanship, for part repair or replacement for the first two (2) years and limited labour for the first two (2) years to the original purchaser. Please see the exclusions and limitation section below as certain restrictions and exclusions apply to this warranty.

Limited One (1) Year Warranty:

Under this warranty, Sherwood Industries Ltd. covers all exterior surface finishes against defects in materials and workmanship, for part repair or replacement and limited labour for the first (1) year to the original purchaser. Please see the exclusions and limitations section below as certain restrictions and exclusions apply to this warranty.

Here is how our Warranty works

If you have any concerns with your VistaFlame product, please contact the dealer where you purchased the fireplace or stove. Your dealer shall make all claims under this warranty in writing.

To the Dealer

When filling out a warranty claim, please complete the following information on an official warranty claim form:

Customer information: Name, address and telephone number of purchaser and date of purchase.

Dealer information: Date of installation, name of installer and dealer, serial number of the appliance, nature of complaint, defects or malfunction, description and part numbers of any parts replaced.

To the Distributor

Sign and verify that work and information are correct.

Exclusions and Limitations:

1. This Warranty does not cover tarnish, discoloration or wear on the plating or paint.
2. This Warranty excludes wear and tear or breakage caused by cleaning, moving or service on log set and panels.
3. A qualified installer must install this stove or fireplace. This Limited Warranty covers defects in materials and workmanship only if the product has been installed in accordance with local building and fire codes; in their absence, refer to the owner's manual. If the product is damaged or broken as a result of any alteration, willful abuse, mishandling, accident, neglect, or misuse of the product, the Limited Warranty does not apply.

4. The stove must be operated and maintained at all times in accordance with the instructions in the Owner's Manual. If the unit shows signs of neglect or misuse, it is not covered under the terms of this Warranty policy. Performance problems due to operator error will not be covered by the Limited Warranty policy.
5. As this is a heating appliance, some changes in colour of surface finishes may occur. This is not a flaw and as such is not covered under this warranty.
6. Some minor expansion, contraction, or movement of certain parts and resulting noise, is normal and not a defect and, therefore, is not covered under this Limited Warranty.
7. Misuse includes over-firing. Over-firing this appliance can cause serious damage and will nullify the Limited Warranty.
8. The Limited Warranty will cover glass thermal breakage only and will not cover misuse of the stove glass, including but not limited to glass that is struck, has surface contaminates or has had harsh or abrasive cleaners used on it.
9. This warranty does not cover products made or provided by other manufacturers and used in conjunction with the operation of this stove without prior authorization from Sherwood Industries Ltd. The use of such products may nullify the Limited Warranty on this stove. If unsure as to the extent of this Limited Warranty, contact your authorized VistaFlame dealer before installation.
10. Sherwood Industries Ltd. will not be responsible for inadequate performance caused by environmental conditions.
11. The Limited Warranty does not cover installation and operational related problems such as use of downdrafts or spillage caused by environmental conditions. Environmental conditions include but are not limited to nearby trees, buildings, roof tops, wind, hills, mountains, inadequate venting or ventilation, excessive offsets, negative air pressures or other influences caused by mechanical systems such as furnaces, fans, clothes dryers etc.
12. The Limited Warranty is void if:
    a) The stove has been operated in atmospheres contaminated by chlorine, fluorine or other damaging chemicals.
    b) The stove is subject to submersion in water or prolonged periods of dampness or condensation.
    c) Any damage to the unit, combustion chamber or other components due to water, or weather damage which is the result of, but not limited to, improper chimney/venting installation.
    c) Salt air in coastal areas or high humidity can be corrosive to the finish; these environments can cause rusting. Damage caused by salt air or high humidity is not covered by the Limited Warranty.
13. Exclusions to the Limited Warranty include: injury, loss of use, damage, failure to function due to accident, negligence, misuse, improper installation, alteration or adjustment of the manufacturer's settings of components, lack of proper and regular maintenance, alteration, or act of God.
14. The Limited Warranty does not cover damage caused to the fireplace or stove while in transit. If this occurs, do not operate the stove and contact your courier and/or dealer.
15. Limited Warranty does not extend to or include firebox paint, door or glass gaskets with damage caused by normal wear and tear, or exterior paint discoloration or chipping, worn gaskets, etc.
16. The Limited Warranty does not include damage to the unit caused by abuse, improper installation, or modification of the unit.
17. Damage to plated surfaces caused by fingerprints, scratches, melted items, or other external scores and residues left on the plated surfaces from the use of abrasive cleaners or polishes is not covered in this warranty.
18. The Limited Warranty does not cover tarnish, discoloration or wear on the plated surfaces.
19. The paint on the Metal Brick Liner may peel. This is due to the extreme conditions applied to the paint during normal usage. It is not a flaw and is not covered under warranty.

Warranty

20. Sherwood Industries Ltd. is free of liability for any damages caused by the fireplace or stove, as well as inconvenience expenses and materials. The Limited Warranty does not cover incidental or consequential damages.
21. The Limited Warranty does not cover any loss or damage incurred by the use or removal of any component or apparatus to or from the VistaFlame fireplace or stove without the express written permission of Sherwood Industries Ltd. and bearing a Sherwood Industries Ltd. label of approval.
22. Any statement or representation of VistaFlame products and their performance contained in VistaFlame advertising, packaging literature, or printed material is not part of the Limited Warranty.
23. The Limited Warranty is automatically voided if the fireplace or stove's serial number has been removed or altered in any way. If the stove is used for commercial purposes, it is excluded from the Limited Warranty.
24. No dealer, distributor, or similar person has the authority to represent or warrant VistaFlame products beyond the terms contained within the Limited Warranty. Sherwood Industries Ltd. assumes no liability for such warranties or representations.
25. Sherwood Industries Ltd. will not cover the cost of the removal or re-installation of the stove, hearth, facing, mantels, venting or other components.
26. Labour to replace or repair items under this Limited Warranty will be covered per our warranty service fee reimbursement schedule. Labour rates are set per component and as such total labour costs may not be covered.
27. Sherwood Industries Ltd. is not liable for freight or labour on any stove replaced in-field and is not liable for travel costs for service work. In the event of in-home repair work, the customer will pay any in-home travel fees or service charges required by the Authorized Dealer.
28. At no time will Sherwood Industries Ltd. be liable for any consequential damages which exceed the purchase price of the unit. Sherwood Industries Ltd. has no obligation to enhance or modify any stove once manufactured (example: as a stove evolves, field modifications or upgrades will not be performed).
29. This Limited Warranty is applicable only to the original purchaser and it is non-transferable.
30. This warranty only covers VistaFlame products that are purchased through an authorized VistaFlame dealer.
31. If for any reason any section of the Limited Warranty is declared invalid, the balance of the warranty remains in effect and all other clauses shall remain in effect.
32. The Limited Warranty is the only warranty supplied by Sherwood Industries Ltd., the manufacturer of the stove. All other warranties, whether express or implied, are hereby expressly disclaimed and purchaser's recourse is expressly limited to the Limited Warranty.
33. Sherwood Industries Ltd. and its employees or representatives will not assume any damages, either directly or indirectly, caused by improper usage, operation, installation, servicing or maintenance of this stove.
34. Sherwood Industries Ltd. reserves the right to make changes without notice. Please complete and mail the warranty registration card and have the installer fill in the installation data sheet in the back of the manual for warranty and future reference.
35. Sherwood Industries Ltd. is responsible for stocking parts for a maximum of seven (7) years after discontinuing the manufacture or incorporation of the item into its products. An exception to this would be if an OEM supplier is not able to supply a part.

Installation Data Sheet

The following information must be recorded by the installer for warranty purposes and future reference.

NAME OF OWNER:

_____

ADDRESS:

_____

_____

_____

PHONE:_____

NAME OF DEALER:

_____

ADDRESS:

_____

_____

_____

PHONE:_____

MODEL:_____

SERIAL NUMBER:_____

DATE OF PURCHASE: _____ (dd/mm/yyyy)

DATE OF INSTALLATION:_____(dd/mm/yyyy)

☐ NATURAL GAS (NAT) ☐ PROPANE (LPG)

INLET GAS PRESSURE:_____in wc

MAIN BURNER ORIFICE:_____# DMS

PILOT ORIFICE #_____OR_____in diam.

INSTALLER'S SIGNATURE:

_____

NAME OF INSTALLER:

_____

ADDRESS:

_____

_____

_____

PHONE:_____

MANUFACTURED BY:
SHERWOOD INDUSTRIES LTD.
6782 OLDFIELD RD. SAANICHTON, BC, CANADA V8M 2A3
www.envirofire.biz
August 15, 2007
C-11316