SHERWOOD INDUSTRIES IS AN ENVIRONMENTALLY RESPONSIBLE COMPANY. THIS MANUAL IS PRINTED ON RECYCLED PAPER.

PLEASE KEEP THESE INSTRUCTIONS FOR FUTURE REFERENCE

VISTAFLAME

PELLET STOVE

VF100

Freestanding & Fireplace Insert

OWNER'S MANUAL



Contact your building or fire officials about restrictions and installation inspection requirements in your area.

PLEASE READ THIS ENTIRE MANUAL BEFORE INSTALLATION AND USE OF THIS PELLET BURNING ROOM HEATER. FAILURE TO FOLLOW THESE INSTRUCTIONS COULD RESULT IN PROPERTY DAMAGE, BODILY INJURY, OR EVEN DEATH.

VF-50279

Table of Contents

Introduction....3
- Rating Label Location....3
- Pellet Quality....3
- Important Safety Data....4
- Safety Warnings And Recommendations....4

Specifications....6
- Dimensions - Freestanding....6
- Dimensions - Insert....6

Operating Instructions....7
- Control Board Functions....7
- Operating Your Pellet Stove....7
- Turning Your Pellet Stove Off....8

Routine Cleaning and Maintenance....9

Installation....12
- Deciding Where to Locate your Pellet Appliance....12
- Automatic Safety Features....12
- Removing Pellet Stove From Pallet....12
- Installation Of Pedestal - Insert....13
- Clearances to Combustibles - Freestanding....14
- Clearances to Alcove - Freestanding....14
- Clearances to Combustibles - Insert....14
- Outside Fresh-Air Connection....15
- Exhaust And Fresh Air Intake Locations....15
- Vent Termination Requirements....16
- Mobile Home Installation - Freestanding....17
- Corner Through Wall Installation - Freestanding....17
- Horizontal Exhaust Through Wall Installation - Freestanding....18
- Through Wall With Vertical Rise and Horizontal Termination Installation - Freestanding....19
- Inside Vertical Installations - Freestanding....20
- Outside Vertical Installations - Freestanding....20
- Hearth Mount Installation - Freestanding:....21
- Masonry Fireplace Installation - Fireplace Insert....22
- Installation Into Factory Built Fireplaces....24
- Installation of Control Panel into Surround Panel - Insert....24
- Installation and Removal of The Surround Panels - Insert....25
- Slider/Damper Installation....26
- Thermostat Installation....26
- The Tube Scraper Rod....26

Troubleshooting....27

Wiring Diagram....30

Parts List....31

Parts Diagram - Components....34

Parts Diagram - Steel....35

Warranty....36

Installation Data Sheet....39

Introduction

Rating Label Location:

Freestanding: The rating label is located on the inside of the hopper lid.
Insert: The rating label is located on the hopper cover.

Pellet Quality:

Pellet quality is important, please read the following:

Your Vista Flame pellet stove has been designed to burn wood pellets only. Do not use any other type of fuel, as this will void any warranties stated in this manual.

The performance of your pellet stove is greatly affected by the type and quality of wood pellets being burned. As the heat output of various quality wood pellets differs, so will the performance and heat output of the pellet stove.

CAUTION: It is important to select and use only pellets that are dry and free of dirt or any impurities such as high salt content. Dirty fuel will adversely affect the operation and performance of the unit and will void the warranty. The Pellet Fuel Industries (P.F.I.) has established standards for wood pellet manufacturers. We recommend the use of pellets that meet or exceed these standards. Ask your dealer for a recommended pellet type.

P.F.I. PELLET STANDARDS:

Fines (fine particles).....1% maximum through a ⅛" screen
Bulk Density.....40 pound per cubic foot minimum
Size.....¼" to $^{5}/_{16}$" diameter ½ – 1½" long maximum
Ash Content.....1% maximum (Premium grade)
.....3% maximum (Standard grade)
Moisture Content.....8% maximum
Heat Content.....approximately 8200 Btu per pound minimum

ASH: The ash content of the fuel and operation of your stove will directly determine the frequency of cleaning. The use of high ash fuels may result in the stove needing to be cleaned daily. A low ash fuel may allow longer intervals between cleaning.

CLINKERING: [clinkers are silica (sand) or other impurities in the fuel that will form a hard mass during the burning process]. This hard mass will block the air flow through the Burn Pot Liner and affect the performance of the stove. Any fuel, even approved types, may tend to clinker. Check the Burn-Pot Liner daily to ensure that the holes are not blocked with clinkers. If they become blocked, remove the liner (when the unit is cold) and clean/scrape the clinkers out. Clean the holes with a small pointed object if required. Refer to the section Routine Cleaning and Maintenance.

PELLET FEED RATES: Due to different fuel densities and sizes, pellet feed rates may vary. This may require an adjustment to the slider damper setting or to the auger feed trim setting on low.

Since Sherwood Industries Ltd. has no control over the quality of pellets that you use, we assume no liability for your choice in wood pellets.

Store pellets at least 36" (1 m) away from the pellet stove.

Introduction

Important Safety Data:

Please read this entire Owner's Manual before installing or operating your Vista Flame Pellet Stove. Failure to follow these instructions may result in property damage, bodily injury or even death. Contact your local building or fire official to obtain a permit and any information on installation restrictions and inspection requirements for your area.

To prevent the possibility of a fire, ensure that the appliance is properly installed by adhering to the installation instructions. An Vista Flame dealer will be happy to assist you in obtaining information with regards to your local building codes and installation restrictions.

Be sure to maintain the structural integrity of the home when passing a vent through walls, ceilings, or roofs.

The stove's exhaust system works with negative combustion chamber pressure and a slightly positive chimney pressure. It is very important to ensure that the exhaust system be sealed and airtight. The ash pan and viewing door must be locked securely for proper and safe operation of the pellet stove.

Do not burn with insufficient combustion air. A periodic check is recommended to ensure proper combustion air is admitted to the combustion chamber. Setting the proper combustion air is achieved by adjusting the slider damper located on the left side of the stove.

When installing the stove in a mobile home, it must be electrically grounded to the steel chassis of the home and bolted to the floor. Make sure that the structural integrity of the home is maintained and all construction meets local building codes.

Minor soot or creosote may accumulate when the stove is operated under incorrect conditions such as an extremely rich burn (black tipped, lazy orange flames).

Safety Warnings And Recommendations:

Caution: Do not connect to any air distribution duct or system.
Do not burn garbage or flammable fluids such as gasoline, naptha or engine oil.
Unit hot while in operation. Keep children, clothing and furniture away. Contact may cause skin burns.

FUEL: This pellet stove is designed and approved to only burn wood pellet fuel with up to 3% ash content. Dirty fuel will adversely affect the operation and performance of the unit and may void the warranty. Check with your dealer for fuel recommendations.

THE USE OF CORDWOOD IS PROHIBITED BY LAW.

SOOT: Operation of the stove with insufficient combustion air will result in the formation of soot which will collect on the glass, the heat exchanger, the exhaust vent system, and may stain the outside of the house. This is a dangerous situation and is inefficient. Frequently check your stove and adjust the slider/damper as needed to ensure proper combustion. **See: "Slider/Damper Setting".**

CLEANING: There will be some build up of fly ash and small amounts of creosote in the exhaust. This will vary due to the ash content of the fuel used and the operation of the stove. It is advisable to inspect and clean the exhaust vent semi-annually or every two tons of pellets.

ASHES: Disposed ashes should be placed in a metal container with a tight fitting lid. The closed container of ashes should be on a non-combustible floor on the ground, well away from all combustible materials pending final disposal. If the ashes are disposed of by burial in soil or otherwise locally dispensed, they should be retained in the closed container until all cinders have been thoroughly cooled.

Introduction

ELECTRICAL: The use of a surge protected power bar is recommended. The unit must be grounded. The grounded electrical cord should be connected to a standard 115 volts (4.5 Amps), 60 hertz electrical outlet. Ensure the polarity to the outlet, the unit will be plugged into, is correct as incorrect polarity can affect the unit's operation. Be careful that the electrical cord is not trapped under the appliance and that it is clear of any hot surfaces or sharp edges and also must be accessible. If this power cord should become damaged, a replacement power cord must be purchased from the manufacture or a qualified Vista Flame dealer. The VF100's maximum power requirement is 520 watts.

GLASS: Do not abuse the glass by striking or slamming the door. Do not attempt to operate the stove with broken glass. The stove uses ceramic glass. Replacement glass must be purchased from an Vista Flame dealer. Do not attempt to open the door and clean the glass while the unit is in operation or if glass is hot. To clean the glass, use a soft cotton cloth and mild window cleaner, gas or wood stove glass cleaner, or take a damp paper towel and dip into the fly ash. This is a very mild abrasive and will not damage the glass.

FLAMMABLE LIQUIDS: Never use gasoline, gasoline-type lantern fuel, kerosene, charcoal lighter fluid, or similar liquids to start or "freshen up" a fire in the heater. Keep all such liquids well away from the heater while it is in use.

SMOKE DETECTOR: Smoke detectors should be installed and maintained in the structure when installing and operating a pellet burning appliance.

OPERATION: The ash pan and door must be closed securely for proper and safe operation of the pellet stove. Also ensure all gaskets on the door are checked and replaced when necessary.

KEEP ASH PAN FREE OF RAW FUEL.
DO NOT PLACE UNBURNED OR NEW PELLET FUEL IN ASH PAN. A fire in the ash pan may occur.

INSTALLATION: Be sure to maintain the structural integrity of your home when passing a vent through walls, ceilings, or roofs. It is recommended that the unit be secured into its position in order to avoid any displacement.
DO NOT INSTALL A FLUE DAMPER IN THE EXHAUST VENTING SYSTEM OF THIS UNIT.
DO NOT CONNECT THIS UNIT TO A CHIMNEY FLUE SERVING ANOTHER APPLIANCE.

FRESH AIR: Outside Fresh Air connection is optional. Must be connected to all units installed in Mobile and "Air Tight Homes" (R2000) or where required by local codes. Consider all large air moving devices when installing your unit and provide room air accordingly. Limited air for combustion may result in poor performance, smoking and other side effects of poor combustion.

If you have any questions with regards to your stove or the above-mentioned information, please feel free to contact your local dealer for further clarification and comments.

SINCE SHERWOOD INDUSTRIES LTD. HAS NO CONTROL OVER THE INSTALLATION OF YOUR STOVE, SHERWOOD INDUSTRIES LTD. GRANTS NO WARRANTY IMPLIED OR STATED FOR THE INSTALLATION OR MAINTENANCE OF YOUR STOVE. THEREFORE, SHERWOOD INDUSTRIES LTD. ASSUMES NO RESPONSIBILITY FOR ANY CONSEQUENTIAL DAMAGE(S).

SAVE THIS INSTRUCTION MANUAL FOR FUTURE REFERENCE

Specifications

Dimensions - Freestanding:

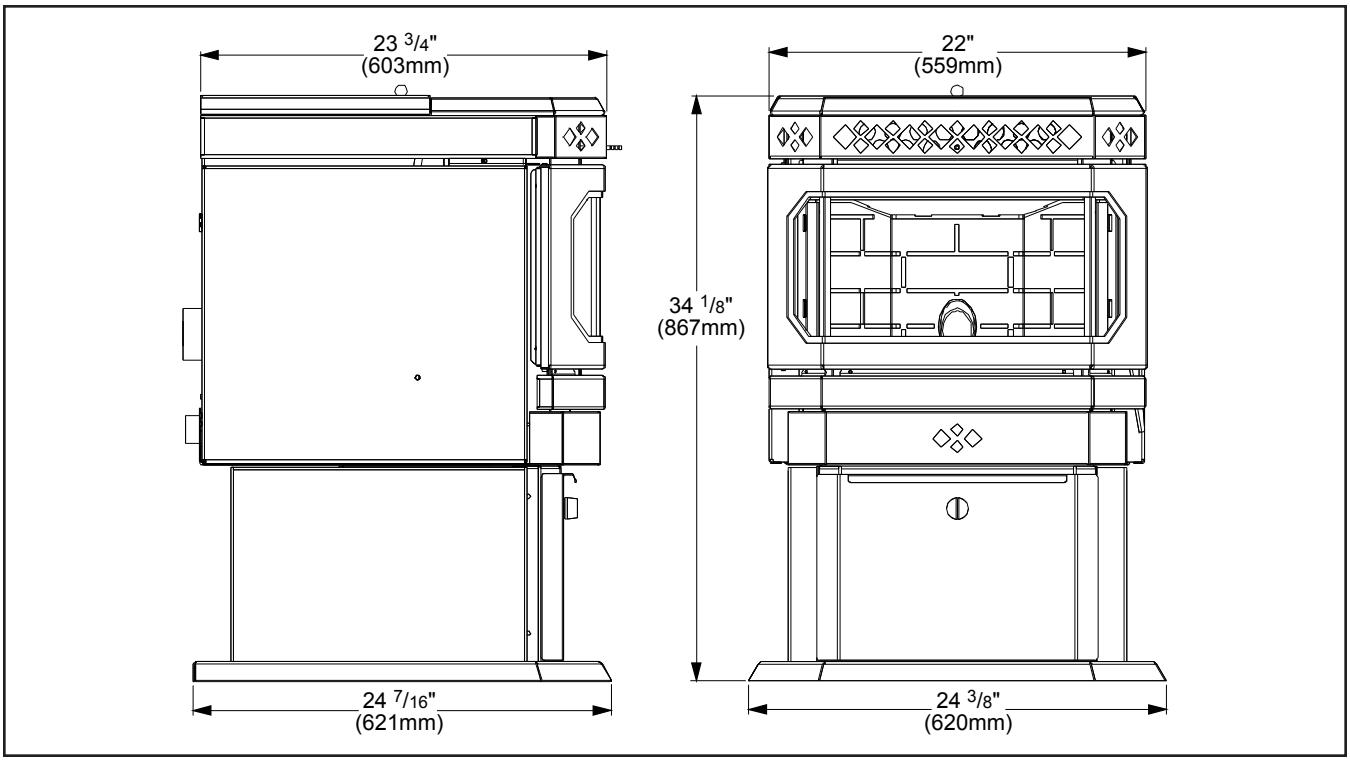

Figure 1: Dimensions of VF100 Freestanding.

Dimensions - Insert:

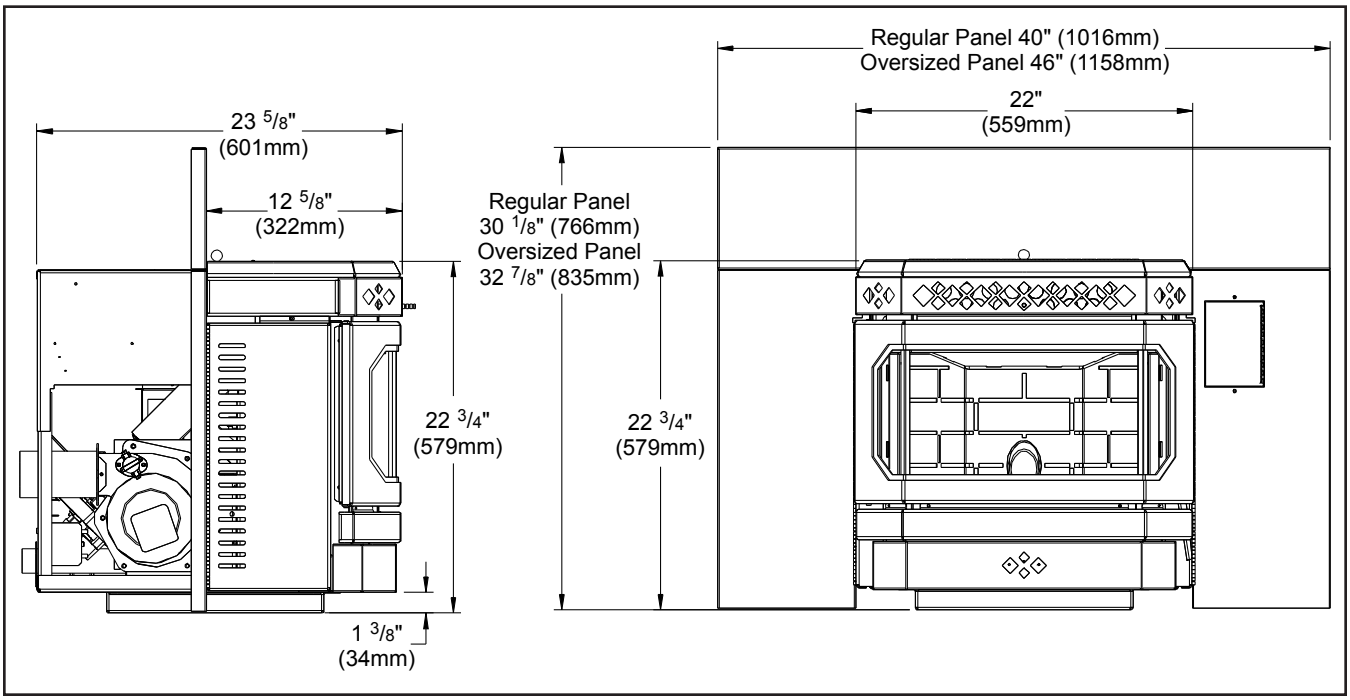

Figure 2: Dimensions of VF100 Insert.

Operating Instructions

Control Board Functions:

1. **AUGER TRIM:** Used to change feed rates on LOW ONLY for poorer quality fuels. Push the Auger Trim button until the number 1 and 5 lights appear on the Heat Level Indicator. This will increase the feed rate to 4 seconds ON time Auger pulse. This is done only on LOW to allow the burning of poor quality fuels. Push the button until the number 1 and 4 lights appear, this will reduce the Auger On time to 2 second. This setting is for high-grade fuel only. Push the button until just the number 1 light is on, this is for a three (3) second on time (standard setting).

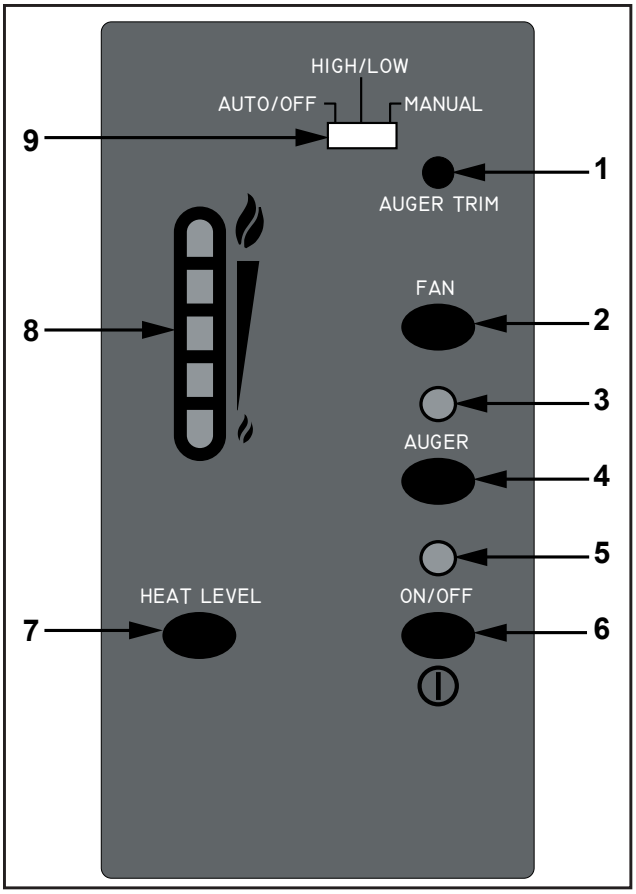

Figure 3: Circuit Board Control Panel Decal

2. **CONVECTION BLOWER CONTROL:** Used to turn the convection blower ON/OFF. Leave the convection blower ON for peak efficiency
3. **AUGER PULSE LIGHT:** This light will flash in conjunction with the auger.
4. **MANUAL AUGER FEED:** This button can be used to "prime the auger system". This button will turn off after 60 seconds and then must be released and pressed again.
5. **SYSTEM LIGHT:** Responsible for signaling the state of the control board. When the light is flashing, the stove is in an automatic mode. When the light is solid, the Heat Level Setting can be altered.
6. **ON/OFF BUTTON:** Used to turn the unit ON and OFF manually.
7. **HEAT LEVEL ADJUSTMENT:** When pressed, will change the heat setting of the unit from low to high.
8. **HEAT OUTPUT INDICATOR:** Shows the present heat output setting.
8. **THERMOSTAT SWITCH:** Sets the unit's control mode; AUTO/OFF or HIGH/LOW (when using a Thermostat or Timer) or MANUAL.

Operating Your Pellet Stove:

DO NOT OPERATE THE UNIT WITH THE DOOR OR ASH PAN OPEN. Keep hopper lid closed except during re-fuelling.

CAUTION: When operating during adverse weather, such as high winds or freezing rain, if the unit exhibits dramatic changes in combustion stop using the unit immediately. Watch for blocked exhaust outlet.

PRE-BURN CHECK: The burn pot liner holes must be clear and the liner installed properly against the ignitor tube. Check the hopper for enough pellets to start the unit.

Note: The thermostat mode can be changed during normal operation.

MANUAL MODE:

All control of circuit board function is adjusted at the circuit board.

Operating Instructions

To START: Press the ON / OFF button. The stove will turn on. The system light will flash. The Auger Light will flash with each pulse of the auger (the Auger Feed Rate is pre-programmed during start-up). The Heat Level Indicator will show the Heat Level that the stove will run at after start-up.

If this is the first time the unit has been started or the unit has run out of fuel, the auger will need to be primed. Press the Manual Auger Feed button until fuel starts to drop into the Burn Pot Liner (see "Operating Instructions; Control Board Functions").

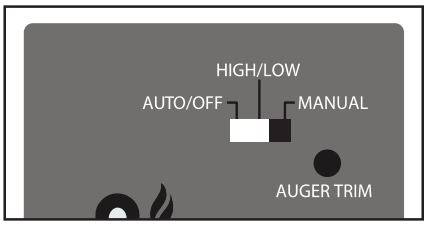

Figure 4: Thermostat Switch in MANUAL position.

When a fire has been established, the System Light will turn solid and the convection blower will turn on (after approximately 10 - 15 minutes), and the Auger Light will continue to flash to the corresponding Heat Level setting.

To OPERATE: Press the Heat Level button to change the desired Heat Level Output setting.

The speed of the convection blower is controlled by the setting of the heat level. This blower can be turned OFF by depressing the convection blower control button. For the best efficiency, the convection blower should be left on at all times.

When operating on LOW HEAT LEVEL, the feed rate can be adjusted, using the auger trim, for different quality fuels. These settings can be used if the fire keeps going out on low (poor quality fuel). Or if the low setting is too hot for the room (see "Operating Instructions; Control Board Functions").

HIGH/LOW MODE: (Requires a Thermostat or Timer)

INITIAL START-UP: See MANUAL MODE above.

OPERATION: When the thermostat calls for heat (contacts are closed) the stove settings are adjustable as per Manual Mode. When the thermostat contacts open, the HEAT LEVEL and Fans will drop down to the LOW setting until the thermostat contacts close again. *The LOW heat setting can be adjusted for different fuel qualities (see "Operating Instructions - Control Board Functions"). The stove will come back to the previous HEAT LEVEL setting when the thermostat contacts close again.

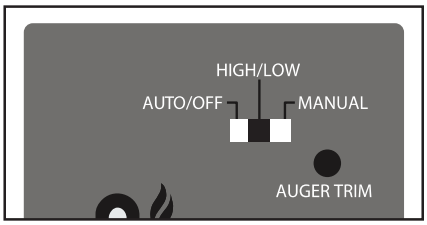

Figure 5: Thermostat Switch in HIGH/LOW position.

AUTO/OFF MODE: (Requires a Thermostat or Timer)

INITIAL START-UP: See MANUAL MODE above.

OPERATION: When the thermostat contacts close, the unit will light automatically. Once up to temperature, the stove operates the same as in MANUAL. When the thermostat contacts open, the stove's HEAT LEVEL and Fans will drop down to the LOW setting for 30 minutes. If the thermostat contacts close within the 30 minutes, the HEAT LEVEL will return to the previous MANUAL setting. If the thermostat contacts remain open, the stove automatically begins its shutdown routine. The stove will re-light when the thermostat contacts close again.

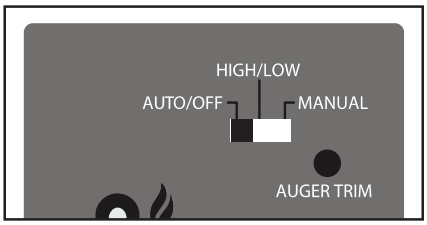

Figure 6: Thermostat Switch in AUTO/OFF position.

Turning Your Pellet Stove Off:

- MANUAL and HI / LOW mode: To turn the unit OFF, simply press the ON / OFF button. This will stop the feed of pellets. The blowers will continue to operate and cool the stove down. When cool enough, the stove will turn off.
- AUTO / OFF mode: To turn the unit OFF, turn the Thermostat down or Timer off.

DO NOT turn unit off during start-up or unplug unit while operating; this may lead to smoke escaping from the stove.

Routine Cleaning and Maintenance

NOTE: Do not use abrasive cleaners to clean the surface or any part of the stove.

The following should be inspected periodically to ensure that the appliance is operating at its optimum and giving you excellent heat value:

2-3 Days / Weekly	Bi-Annually or 2 Tons of Fuel
Burn Pot and Liner	Exhaust Vent
Ash Pan	Fresh air Intake Tube
Inside Firebox	Blower Mechanisms
Door Glass	Heat exchanger tubes
Heat exchanger tubes	Behind firebox liners
Ash pan & Door gaskets	All Hinges
Door Latch	Post Season Clean-up

TOOLS REQUIRED TO CLEAN UNIT

- Torx T-20 Screwdriver
- $^{5}/_{16}$" Wrench or Socket,
- Brush,
- Soft Cloth
- Vacuum with fine filter bag

The following list of components should be inspected and maintained routinely to ensure that the appliance is operating at its optimum and giving you excellent heat value:

BURN POT AND LINER (2-3 days)

This is the 'pot' where the pellets are burned. The burn pot and liner should be inspected every two to three days, to ensure proper air flow through the liner**. Failure to keep the liner clean may cause a build up of fuel past the burn pot liner and up the drop tube. This will cause the auger to jam and may result in pellets burning in the drop tube and hopper**.

Ensure the unit is cold before cleaning. To remove the burn pot and burn pot liner, open the door using the door handle provided, located on the left-hand side of the stove. Swing the door open. Lift the liner from the burn pot. Lift the burn pot from the firebox by gently lifting the front of the burn pot up first, then sliding the assembly from the air intake tube and the ignitor cartridge. Using a metal scraper, remove material that has accumulated or is clogging the liner's holes. Then dispose of the scrapped ashes from the liner and from inside the burn pot. Place the burn pot back into the stove, making sure that the pipes are properly inserted into the burn pot and the front tabs are placed in the firebox. Place the liner back into the burn-pot making sure that the ignitor hole in the liner is aligned with the ignitor tube. Push the liner up against the ignitor tube.

- If, after long periods of burning, the fire continually builds up and overflows the burn pot or there is a build up of clinkers, this is an indication that the pellet fuel quality is poor or the stove may need cleaning. Check the stove for ash build up (clean if required) and adjust the slider / damper to produce the proper clean combustion.

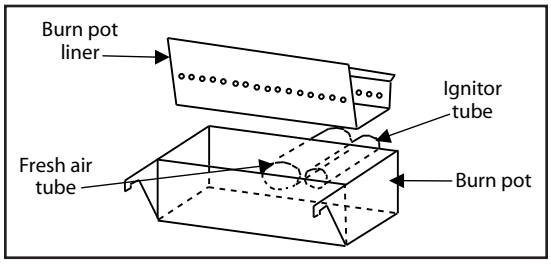

Figure 7: Burn pot with liner.

INSIDE FIREBOX (weekly)

For bi-weekly clean out, ash may be removed from behind the steel plates by rotating the circular cover to allow vacuuming behind the plates.

ASH PAN AND DOOR GASKETS (weekly)

After extended use the gasket may come loose. To repair or replace this, glue the gasket on, using high-temperature fiberglass gasket glue. This is important to maintain an airtight assembly.

Routine Cleaning and Maintenance

ASH PAN (2-3 days)

Monitor the ash level every week. Remember that different pellet fuels will have different ash contents. Ash content is a good indication of fuel efficiency and quality. Refer to "Warnings and Recommendations" for disposal of ashes. **DO NOT PLACE UNBURNED OR RAW PELLET FUEL IN ASH PAN.**

Dump the ashes into a metal container stored away from combustibles. Monitor the ash level every week. Remember that different pellet fuels will have different ash contents. Ash content is a good indication of fuel efficiency and quality. Refer to "Warnings and Recommendations" for disposal of ashes.

Vacuum the ash pan and inside the pedestal. CAUTION: BECAUSE THE FLY ASH IS VERY FINE, THE USE OF A FINE FILTER VACUUM BAG WILL BE REQUIRED TO PREVENT ASH FROM BEING BLOWN BACK INTO THE ROOM. Please pay special attention that there are no hot ashes in the firebox or there could be a possibility of a fire hazard inside the vacuum cleaner. Place all hot ashes into a non-combustible container.

FREESTANDING ASH PAN:

The VF100 pellet stove freestanding's ash pan is located under the burner, in the pedestal, and has a latching mechanism to secure it. To remove the ash pan, unlock the latch on the ash pan and then pull the pan out.

INSERT ASH PAN:

The VF100 pellet stove insert's ash pan is located behind the lower grill.

HEAT EXCHANGER TUBES (2-3 days)

The handle for the heat exchanger cleaning rod is pointed out in Figure 8. This handle is to be pulled back and forth a few times **(ONLY WHEN THE UNIT IS COLD)** in order to clean away any fly ash that may have collected on the heat exchanger tubes. As different types of pellets produce different amounts of ash, cleaning of the tubes should be done on a regular basis to enable the unit to run efficiently.

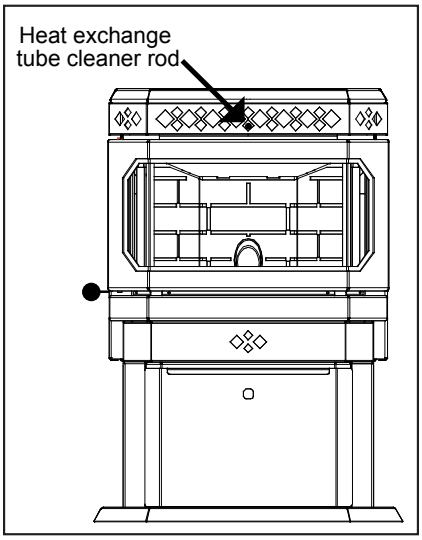

Figure 8: VF100 Heat exchanger rod.

FRESH AIR INTAKE (season)

Inspect periodically to be sure that it is not clogged with any foreign materials.

EXHAUST PASSAGES (season)

For bi-weekly clean out, ash may be removed from behind the steel plates by rotating the circular covers located behind the right and left side panels. Loosen the screw on the disks and open, this will allow vacuuming behind the firebox liner's plates.

Removal of the firebox backing for bi-annual cleaning:

- Remove the top baffle.
- Lubricate and then remove the seven (7) screws that hold the brick liner in place. Tilt the top of the brick panel towards the firebox opening and remove from the firebox
- Remove the top rod by first removing the screw that holds it in place, then slide the rod sideways
- Pull the side panels into the center of the firebox, then out
- Pull the center panel out.
- Clean and vacuum all passages thoroughly.

Routine Cleaning and Maintenance

Installation of firebox backing:

- Install the side panels in place. Insert center panel, hold the panels in place
- Install the top rod by sliding it into one side panel then across into the other panel. Screw rod in place.
- Re-install steel brick liner and screw in place.
- Replace top baffle

EXHAUST VENT (season)

The products of combustion will contain small particles of flyash. The flyash will collect in the exhaust venting system and restrict the flow of the flue gases. Incomplete combustion, such as occurs during startup, shutdown, or incorrect operation of the room heater will lead to some soot formation which will collect in the exhaust venting system. The exhaust venting system should be inspected at least once every year or after two tons of pellets to determine if cleaning is necessary. We recommend contacting your dealer for professional cleaning. To remove dust from the vent pipe, tap lightly on the pipe to dislodge any loose ash. Open the bottom of the "T" to dump the ash, then vacuum as much of the ash out of the vent pipe as possible.

BLOWER MECHANISMS (season)

Unplug the stove then open the right/left side panels to access the two blowers. Vacuum all dust from motors. Only the convection blower motor (on the right side of the stove) will require lubrication. The convection motor has two lubrication holes on it. Use two drops of SAE 20 light oil to lubricate every six months. Excess oil may damage the motor. The exhaust blower's motor has sealed bearings, DO NOT lubricate this motor.

DOOR GLASS (**It is recommended that your dealer replace the glass if broken.)**

The door glass is made of 5 mm thick, high temperature PYROCERAMIC. To replace the glass, unscrew and remove the four glass retainers. Remove the glass and any broken pieces. High temperature fiberglass tape should be used around the glass. Replace the glass, center the glass assembly in the frame, then screw the glass retainers back to the frame. The use of substitute materials is prohibited use only part EF-062.

POST SEASON CLEAN-UP

Once you are finished using the pellet appliance for the season, unplug the stove for added electrical protection. It is very important that the stove be cleaned and serviced as stated above.

CLEANING PLATED SURFACES

Please clean all fingerprints off of all gold parts, with denatured alcohol on a soft cloth, before firing the unit each time. Fingerprints, etc. can become permanently etched into the gold if not removed before operating the pellet heater.

BRICK PANEL

The paint on the steel brick panel may peel. This is due to extreme conditions applied to the paint and is in no way covered by warranty.

Installation

Deciding Where to Locate your Pellet Appliance:

1. Do not install the stove in a bedroom or room where people sleep in.
2. Locate the stove in a large and open room that is centrally located in the house. This will optimize heat circulation.
3. Check clearances to combustibles and for the least amount of interference to house framing, plumbing, wiring, etc.
4. You can vent the stove with approved pipe through an exterior wall behind the unit or pass it through the ceiling and roof. The stove can connect to an existing masonry or metal chimney (must be lined if the chimney is over 6" (15 cm) diameter, or over 28 inches² (180 cm²) cross sectional area).
5. This unit must not be installed directly onto carpet. If it is to be installed on a carpeted area, a solid surface (wood, metal or approved hearth pad) must be installed between the unit and the carpet.
6. This unit uses large quantities of air for combustion; outside Fresh Air connection is **strongly recommended**. Fresh Air **must** be connected where required by local codes.
7. Do not obtain combustion air from an attic, garage or any unventilated space. Combustion air may be obtained from a ventilated crawlspace.
8. The power cord is 8 feet (2.43 m) long and may require a grounded extension cord to reach the nearest electrical outlet.

NATIONAL FIREPLACE INSTITUTE
NFI
CERTIFIED
www.nficertified.org

We recommend that our pellet hearth products be installed and serviced by professionals who are certified in the U.S. by the National Fireplace Institute® (NFI) as NFI Pellet Specialists or who are certified in Canada by Wood Energy Technical Training (WETT).

Wood Energy Technical Training

Automatic Safety Features of Your Pellet Stove:

A. EXHAUST TEMPERATURE SWITCH: The stove will shut off when the fire goes out and the exhaust temperature drops below 49°C (120°F).

B. HIGH LIMIT SAFETY SWITCH: If the temperature on the hopper reaches 93°C (200°F), the auger will automatically stop and the stove will shut down when the exhaust temperature cools. If this happens, call your local dealer to reset the 93°C (200°F) high limit switch. **ALSO FIND THE REASONS WHY THE UNIT OVERHEATED.**

C. VACUUM SWITCH: If the combustion fan fails or the exhaust vent becomes blocked this switch will stop the auger feed motor and the fire will go out.

Removing Pellet Stove From Pallet:

FREESTANDING: To remove your new freestanding stove from its pallet, remove the ash pan and remove the two (2) wood screws inside this area as shown (see Figure 9). Also remove the two (2) wood screws on the back of the pedestal. Remove the unit form the pallet and replace the ash pan.

INSERT: To remove your new insert stove from its pallet, remove the two (2) wood screws just inside the unit (see Figure 10). Remove the unit form the pallet and install the pedestal (refer to "Installation Of Pedestal - Insert")

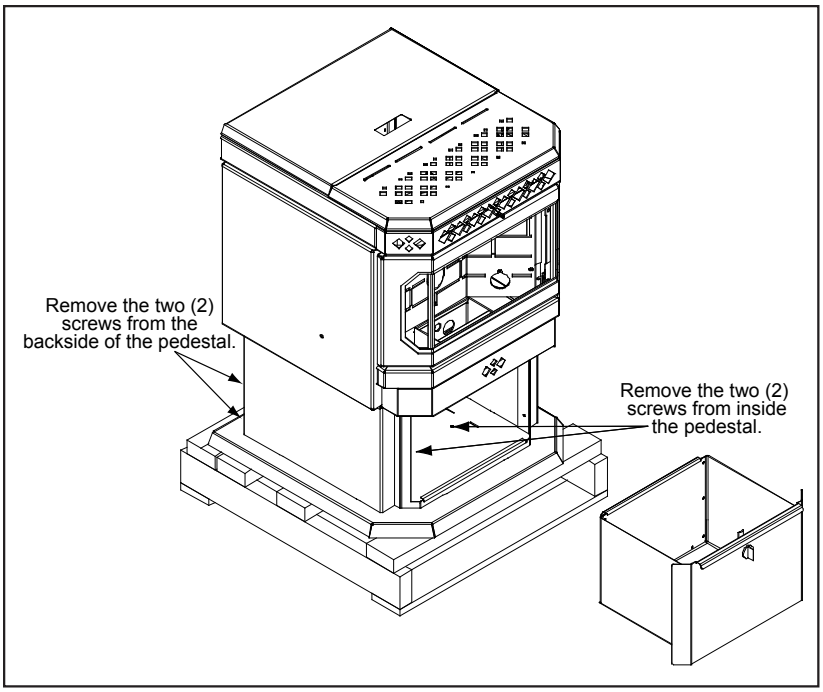

Figure 9: Screws to take out to remove freestanding unit from pallet.

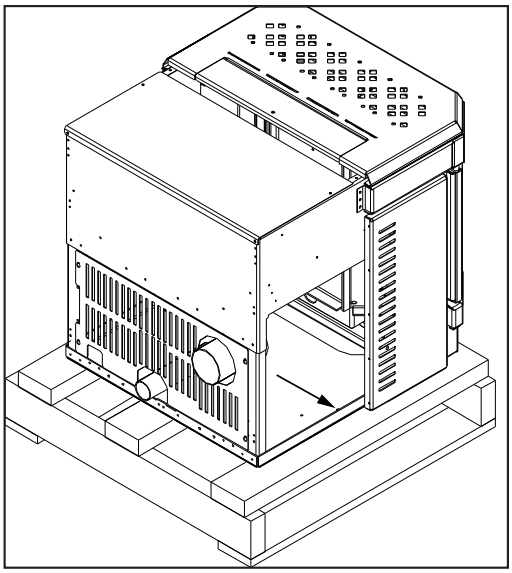

Figure 10: Screws to take out to remove insert unit from pallet.

Installation Of Pedestal - Insert:

The Fireplace Insert model come with a pedestal that has to be attached prior to installation:

1. Remove the unit from the box.
2. Remove the pedestal from the hopper.
3. Place the unit on its back on the pallet.
4. Back the four (4) 5/16" hex head screws in the base off three (3) to four (4) full turns.
5. Secure the pedestal to the unit by tightening the four (4) 5/16" hex head screws around the outside of the pedestal (see Figure 11).

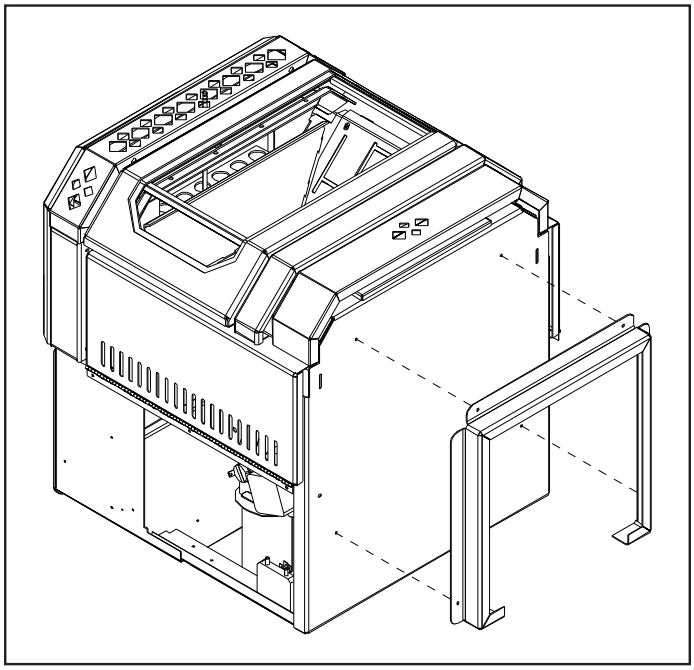

Figure 11: Installing pedestal onto unit.

Clearances to Combustibles - Freestanding:

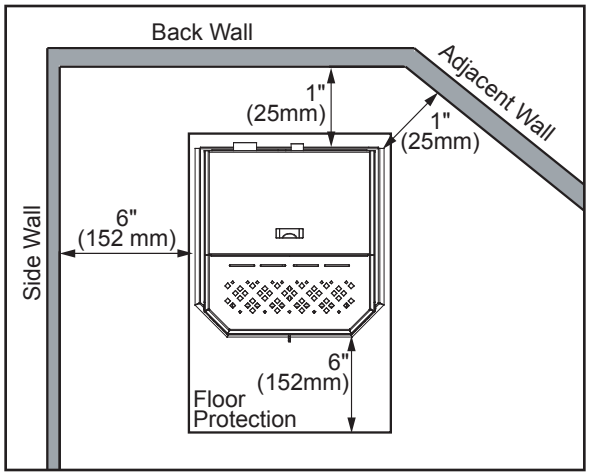

Figure 12: VF100 FS Clearance to Combustibles.

When installing this unit on a combustible floor (for example linoleum, hardwood flooring) a non-combustible hearth pad must be under the unit. The pad must extend at least the width of the appliance [22" (558 mm)] and at least the depth of the appliance plus 6" (153 mm) in front of the appliance [30½" (775 mm)].

Side wall to unit	- 6 inches	(15 cm)
Back wall to unit	- 1 inches	(2.5 cm)
Corner to unit	- 1 inches	(2.5 cm)
Door front to edge of floor protection	- 6 inches	(15 cm)

NOTE: These dimensions are minimum clearances but it is recommended that you ensure sufficient room for servicing, routine cleaning and maintenance.

Clearances to Alcove - Freestanding:

Minimum Alcove width	- 36 inches	(91 cm)
Minimum Alcove height	- 48 inches	(122 cm)
Maximum Alcove depth	- 30 inches	(76 cm)

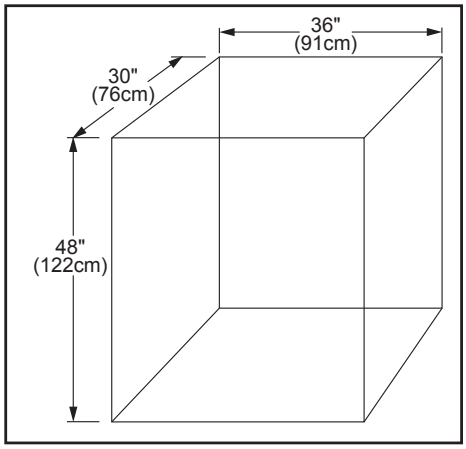

Figure 13: VF100 FS Alcove Size.

Clearances to Combustibles - Insert:

Refer to Figure 14.

Side wall to unit	- 8 inches	(20.3 cm)
Mantel projection	- 10 inches	(25.4 cm)
Mantel to top of unit	- 8 inches	(20.3 cm)
Top facing to unit	- 8 inches	(20.3 cm)
Side facing to unit	- 6 inches	(15.2 cm)
Floor protection	- 6 inches	(15.2 cm)

on either side and to the front must be protected by non-combustible material.

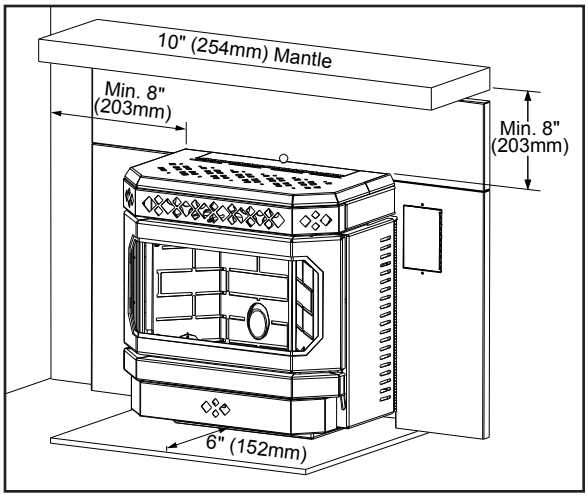

Figure 14: VF100 FPI Clearance to Combustibles.

Outside Fresh-Air Connection:

Outside fresh air is mandatory when installing this unit in airtight homes and mobile homes.

When connecting to an outside fresh air source, do not use plastic or combustible pipe. A 1⅝" minimum (42 mm) ID (inside diameter) steel, aluminum or copper pipe should be used. It is recommended, when you are installing a fresh air system, to keep the number of bends in the pipe to a minimum.

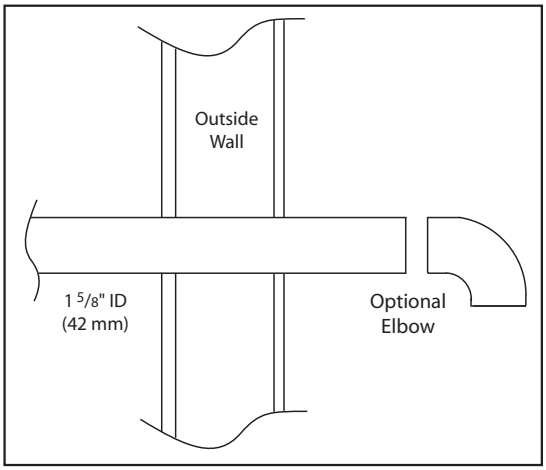

Figure 15: Outside Air Connection.

Exhaust And Fresh Air Intake Locations:

	Freestanding		Fireplace Insert	
Base of unit to center of flue	20 ¼"	(515 mm)	9"	(228 mm)
Side of unit to center of flue	5 3/16"	(132 mm)	5 3/16"	(132 mm)
Center of unit to center of flue	5 ¾"	(146 mm)	5 ¾"	(146 mm)
Base of unit to center of intake	14 ⅝"	(372 mm)	3 ⅜"	(74 mm)
Side of unit to center of intake	12"	(304 mm)	12"	(304 mm)
Center of unit to center of intake	1"	(25 mm)	1"	(25 mm)

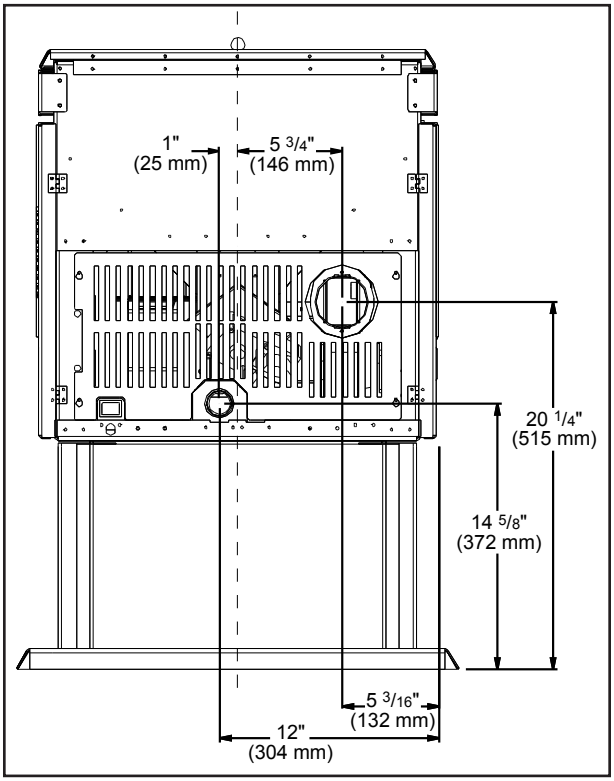

Figure 16: VF100 Freestanding Inlet and Outlet Location.

INSTALL VENT AT CLEARANCES SPECIFIED BY THE VENTING MANUFACTURER

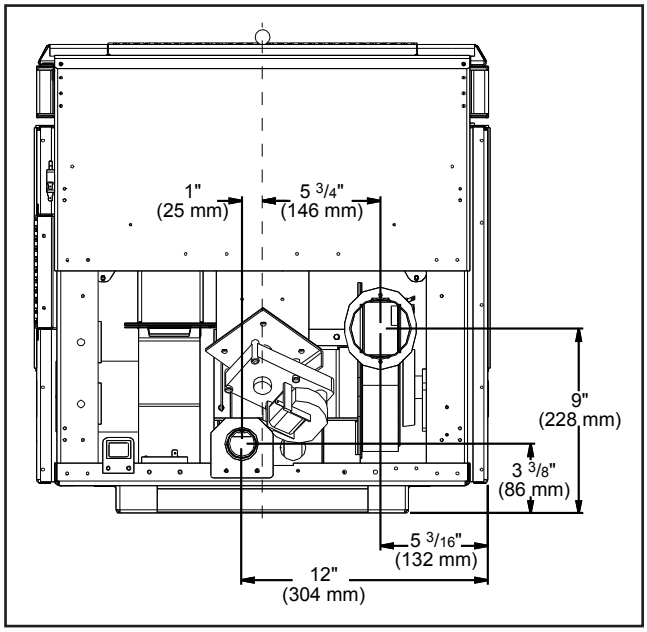

Figure 17: VF100 Fireplace Insert Inlet and Outlet Location.

VENT TERMINATION REQUIREMENTS:

IT IS RECOMMENDED THAT YOUR PELLET STOVE BE INSTALLED BY AN AUTHORIZED DEALER/INSTALLER.

Table 1: Use in conjunction with Figure 16 for allowable exterior vent termination locations.

Letter	Minimum Clearance	Description
A	24 in (61 cm)	Above grass, top of plants, wood, or any other combustible materials.
B	48 in (122 cm)	Beside/below any door or window that may be opened. (18" (46 cm) if outside fresh air installed.)
C	12 in (30 cm)	Above any door or window that may be opened. (9" (23 cm) if outside fresh air installed.)
D	24 in (61 cm)	To any adjacent building, fences and protruding parts of the structure.
E	24 in (61 cm)	Below any eave or roof overhang
F	12 in (30 cm)	To outside corner.
G	12 in (30 cm)	To inside corner, combustible wall (vertical and horizontal terminations).
H	3 ft (91 cm) within a height of 15 ft (4.5 m) above the meter/regulator assembly	To each side of center line extended above natural gas or propane meter/ regulator assembly or mechanical vent.
I	3 ft (91 cm)	From any forced air intake of other appliance
J	12 in (30 cm)	Clearance to non-mechanical air supply inlet to building, or the combustion air inlet to any appliance.
K	24 in (61 cm)	Clearance above roof line for vertical terminations.
L	7 ft (2.13 m)	Clearance above paved sidewalk or paved driveway located on public property.

1. Do not terminate the vent in any enclosed or semi-enclosed areas such as a carport, garage, attic, crawlspace, narrow walkway, closely fenced area, under a sundeck or porch, or any location that can build up a concentration of fumes such as stairwells, covered breezeway, etc.

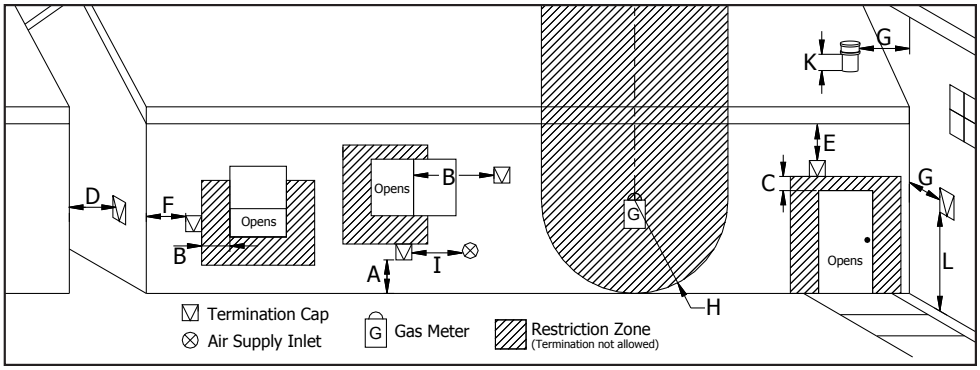

Figure 16: Use in conjunction with Table 1 for allowable exterior vent termination locations.

2. Vent surfaces can become hot enough to cause burns if touched by children. Non-combustible shielding or guards may be required.
3. Termination must exhaust above the inlet elevation. It is recommended that at least five feet of vertical pipe be installed outside when the appliance is vented directly through a wall, to create some natural draft to prevent the possibility of smoke or odor during appliance shut down or power failure. This will keep exhaust from causing a nuisance or hazard from exposing people or shrubs to high temperatures. In any case, the safest and preferred venting method is to extend the vent through the roof vertically.
4. Distance from the bottom of the termination and grade is 12" (30 cm) minimum. This is conditional upon the plants and nature of grade surface. The exhaust gases are hot enough to ignite grass, plants and shrubs located in the vicinity of termination. The grade surface must not be lawn.
5. If the unit is incorrectly vented or the air to fuel mixture is out of balance, a slight discoloration of the exterior of the house might occur. Since these factors are beyond the control of Sherwood Industries Ltd, we grant no guarantee against such incidents.

NOTE: Venting terminals shall not be recessed into walls or siding.

Mobile Home Installation - Freestanding:

- Secure the heater to the floor using the two holes in the pedestal.
- Ensure the unit is electrically grounded to the chassis of your home (permanently).
- Do not install in a room people sleep in.
- Outside fresh air is mandatory. Secure outside air connections directly to fresh air intake pipe and secure with three (3) screws evenly spaced.

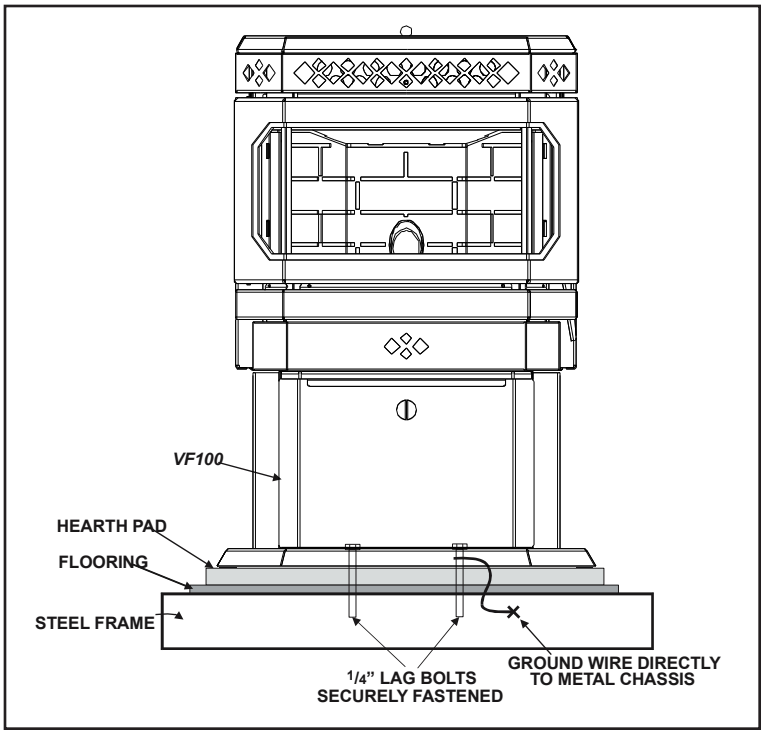

Figure 19: Mobile home installation.

CAUTION: THE STRUCTURAL INTEGRITY OF THE MANUFACTURED HOME FLOOR, WALL AND CEILING/ROOF MUST BE MAINTAINED.

Corner Through Wall Installation - Freestanding:

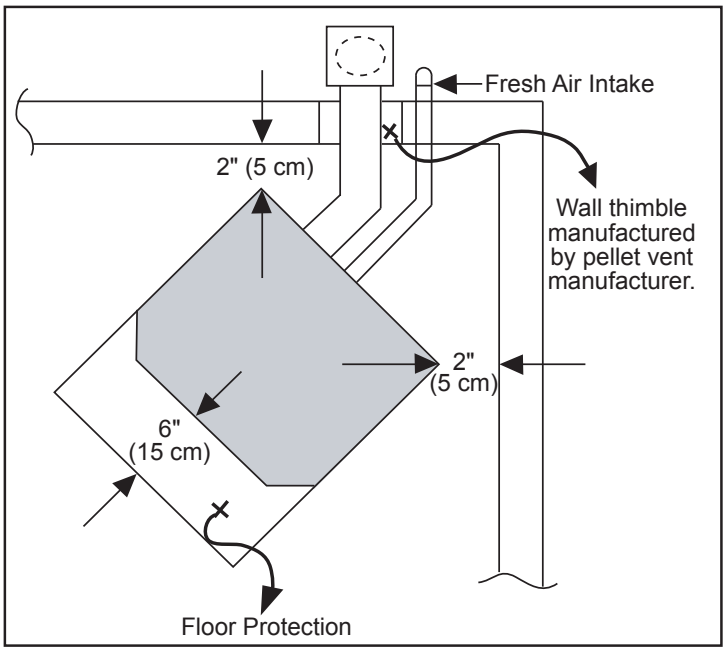

Figure 20: Corner Installation.

Horizontal Exhaust Through Wall Installation - Freestanding:

Vent installation: install vent at clearances specified by the vent manufacturer.
A chimney connector shall not pass through an attic or roof space, closet or similar concealed spaces, or a floor, or ceiling. Where passage through a wall or partition of combustible construction is desired, the installation shall conform to CAN/CSA-B365 Installation Code for Solid-Fuel-Burning Appliances and Equipment. Only use venting of L or PL type with an inside diameter of 3 or 4 inches (7.6 or 10.1 cm).

1. Choose a location for your stove that meets the requirements stated in this manual and allows installation with the least amount of interference to house framing, plumbing, wiring, etc.
2. Install a non-combustible hearth pad (where necessary).
3. Place the appliance 15" (37.5 cm) away from the wall. If the stove is to be set on a hearth pad, set the unit on it.
4. Locate the center of the exhaust pipe on the stove. Extend that line to the wall. Once you have located the center point on the wall, refer to pellet vent manufacturer installation instructions for correct hole size and clearance to combustibles.
5. Install the wall thimble as per the instructions written on the thimble. Maintain an effective vapour barrier in accordance with local building codes.
6. Install a length of 3" (76 mm) or 4" (101 mm) vent pipe into the wall thimble. The pipe should install easily into the thimble.
7. Install the fresh air intake (see Outside Fresh Air Connection).
8. Connect the exhaust vent pipe to the exhaust pipe on the stove. Seal the connection with high temperature silicone.
9. Push the stove straight back, leaving a minimum of 2" (5 cm) clearance from the back of the stove to the wall. Seal the vent pipe to the thimble with high temperature silicone.

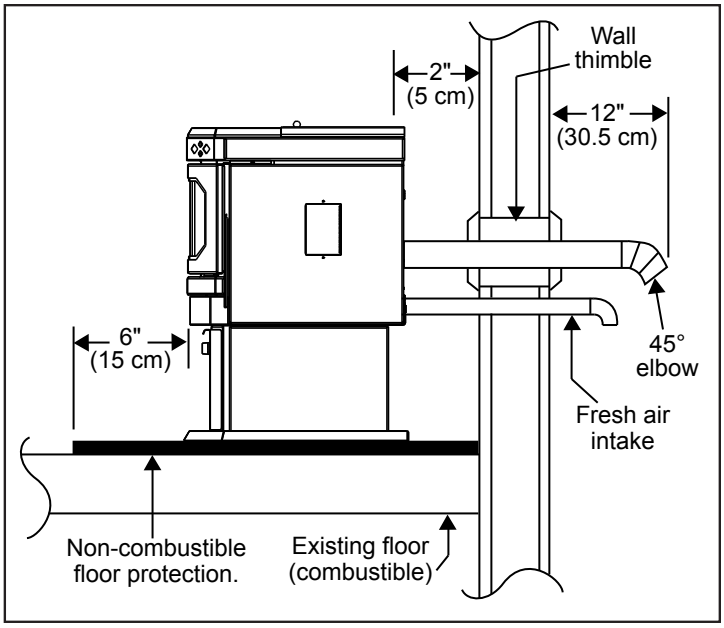

Figure 21: Straight through wall Installation.

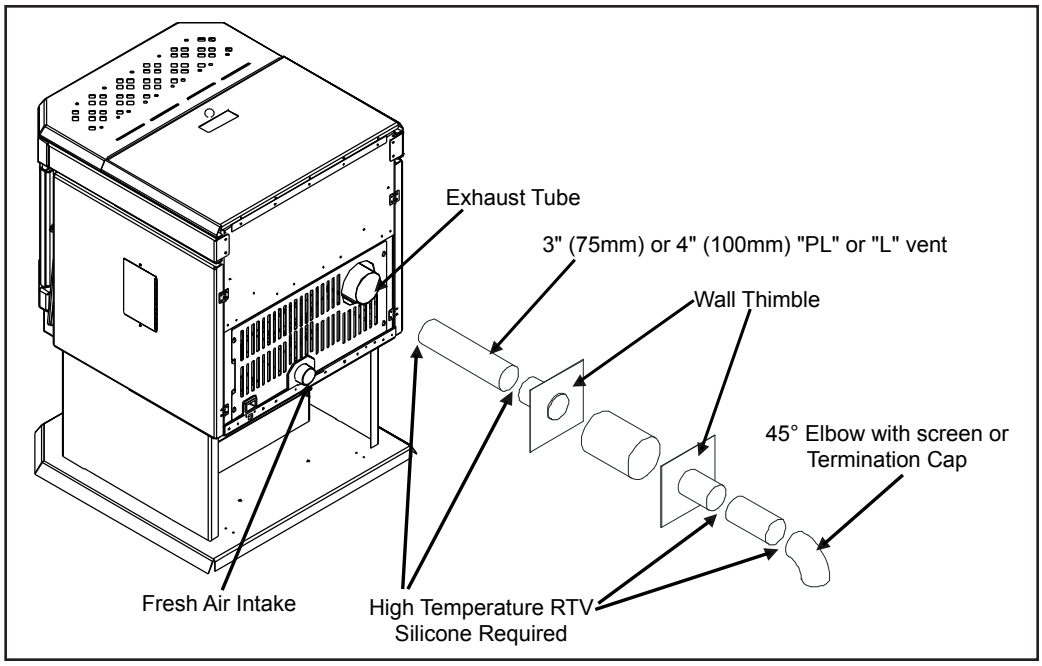

Figure 22: Venting to use with straight through wall Installation.

10. The pipe must extend at least 12" (30 cm) away from the building. If necessary, bring another length of pipe (PL type) to the outside of the home to connect to the first section. Do not forget to place high temperature silicone around the pipe that passes through the thimble.
11. Install a vertical pipe, or if all requirements for direct venting are met, install vent termination. The stainless steel cap termination manufactured by the vent manufacturer is recommended. However, when the vent terminates several feet above ground level and there are no trees, plants, etc. within several feet, a 45° elbow can be used as termination. The elbow must be turned down to prevent rain from entering.

NOTE:

- It is recommended that horizontal through wall installations have 3 to 5 feet (91 to 152 cm) of vertical pipe in the system to help naturally draft the unit in the event of extreme weather or a power outage.
- Some horizontal through wall installations may require a "T" and 3 to 5 feet (91 to 152 cm) of vertical pipe outside the building to help draft the unit. This may be required if a proper burn cannot be maintained, after the stove has been tested and the airflow set. This is due to the back pressure in the exhaust caused by airflow around the structure.
- Follow vent manufacturer guidelines for installation of venting. High temp Sealent must be used when connecting vent pipe to the unit's starter pipe. Improper seals at the vent joints may cause combustion by-products to leak into the room where installed - **seal as required.**

Through Wall With Vertical Rise and Horizontal Termination Installation - Freestanding:

A 45° elbow may be used in place of the termination cap (or stainless steel termination hood).
Figure 23 is the recommended installation set up.
Figure 24 is the installation to use if there is a concrete or retaining wall in line with exhaust vent on a pellet stove. The termination must be 12" (30 cm) from the outside wall and 12" (30 cm) above the ground.

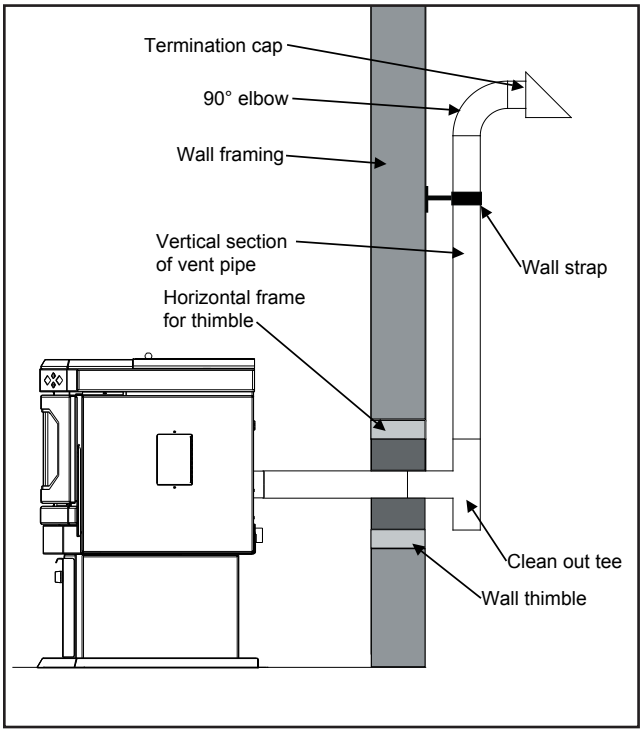

Figure 23: Venting horizontally with rise.

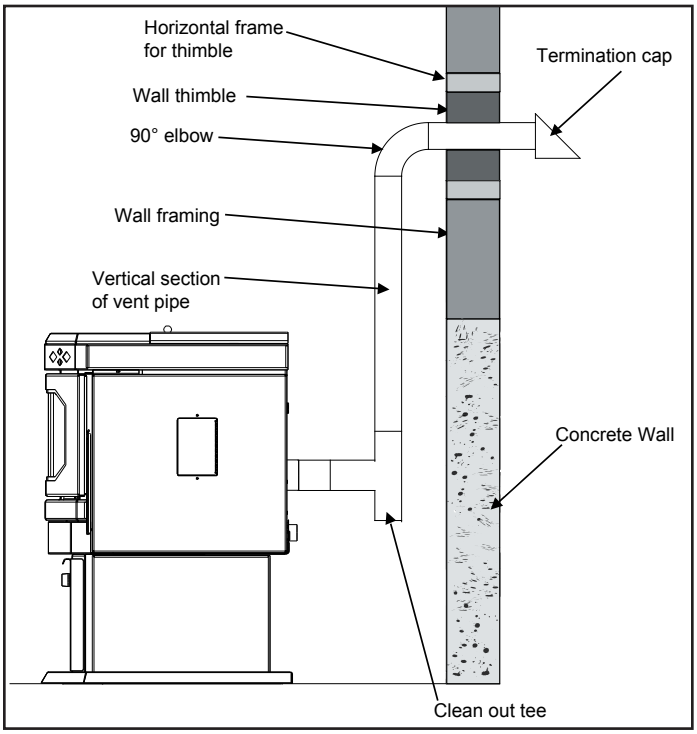

Figure 24: Venting with concrete wall behind unit .

Inside Vertical Installations - Freestanding:

1. Choose a stove location that is ideal. See the section "Deciding Where to Locate your Pellet Appliance."
2. Place a non-combustible hearth pad where necessary.
3. Place the unit on the hearth pad (if installed on a carpeted surface) and space the unit in a manner so when the pellet vent is installed vertically, it will be 3" (7.6 cm) away from a combustible wall.
4. Locate the center of the fresh air intake pipe on the unit. Match that center with the same point on the wall and cut a hole about 1 ⅝" (41 mm) in diameter.
5. Install the fresh air intake pipe.
6. Install the tee with clean out.
7. Install the pellet vent upward from there. When you reach the ceiling, make sure that the vent goes through the ceiling fire stop. Maintain a 3" (7.6 cm) distance to combustibles and keep attic insulation away from the vent pipe. Maintain an effective vapor barrier.
8. Finally, extend the pellet vent to go through the roof flashing.
9. Ensure that the rain cap is approximately 36" (900 mm) above the roof.

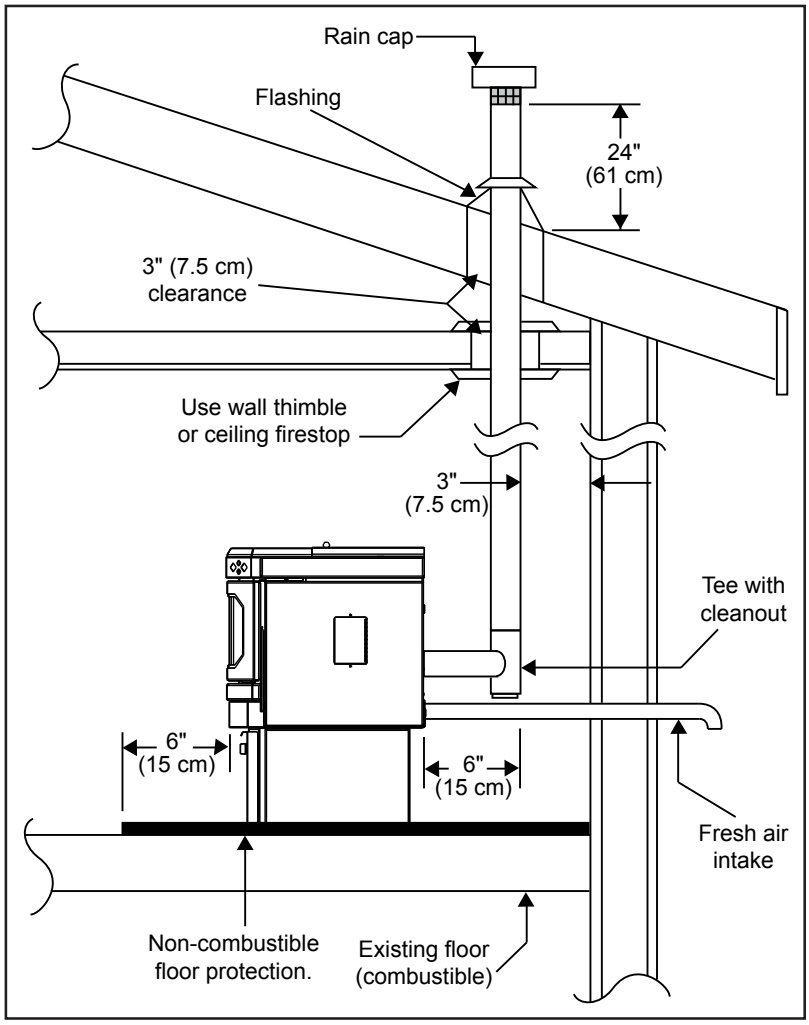

Figure 25: Inside Vertical Installation.

Outside Vertical Installations - Freestanding:

To accomplish a outside vertical pipe installation, follow steps 1 through 5 in the "Inside Vertical Installations - Freestanding" section and then finish it by performing the following (refer to Figure 26).

1. Install a tee with clean out on the outside of the house.
2. Install PL vent upward from the tee. Make sure that you install support brackets to keep the vent straight and secure.
3. Install ceiling thimble and secure the flashing as you go through the roof.
4. Ensure that the rain cap is approximately 36" (91.5 cm) above the roof.

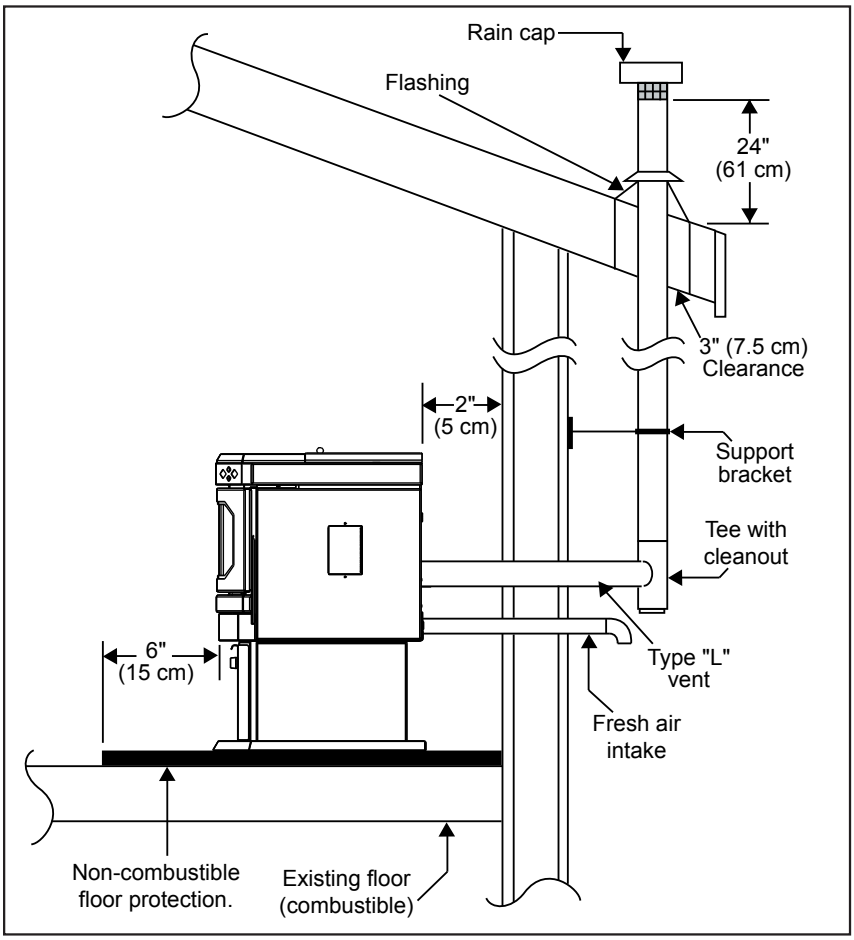

Figure 26: Outside Vertical Installation.

Hearth Mount Installation - Freestanding:

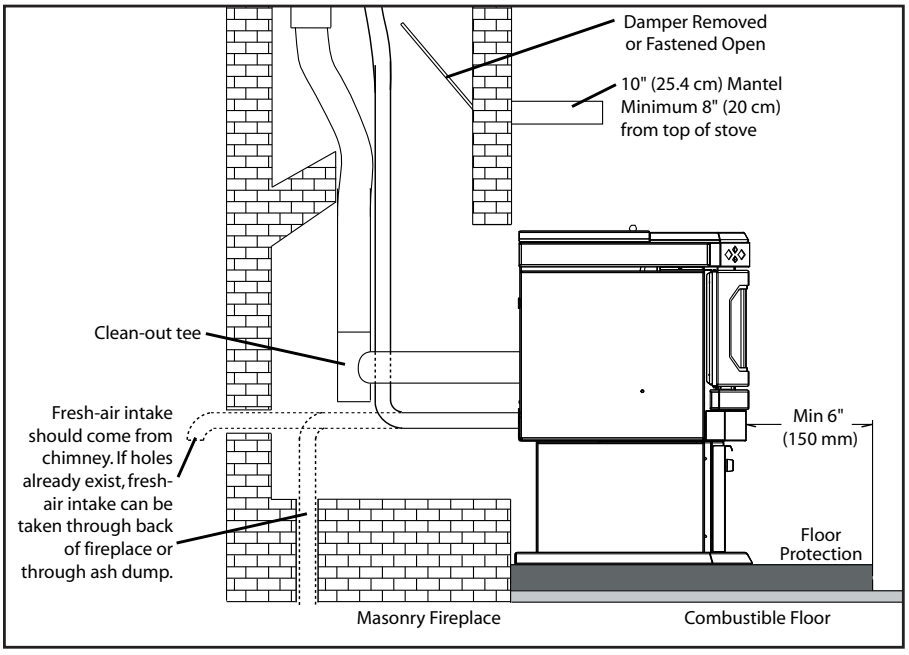

Figure 27: Freestanding hearth mount installation.

Refer to Figures 27 and 28.

1. Install the hearth pad.
2. Lock fireplace damper in the open position.
3. Install a positive flue connector at the fireplace dampers.
4. Connect a tee or a 90° elbow to the exhaust pipe.
5. Install flexible stainless steel liner or listed pellet vent to the top of the chimney.

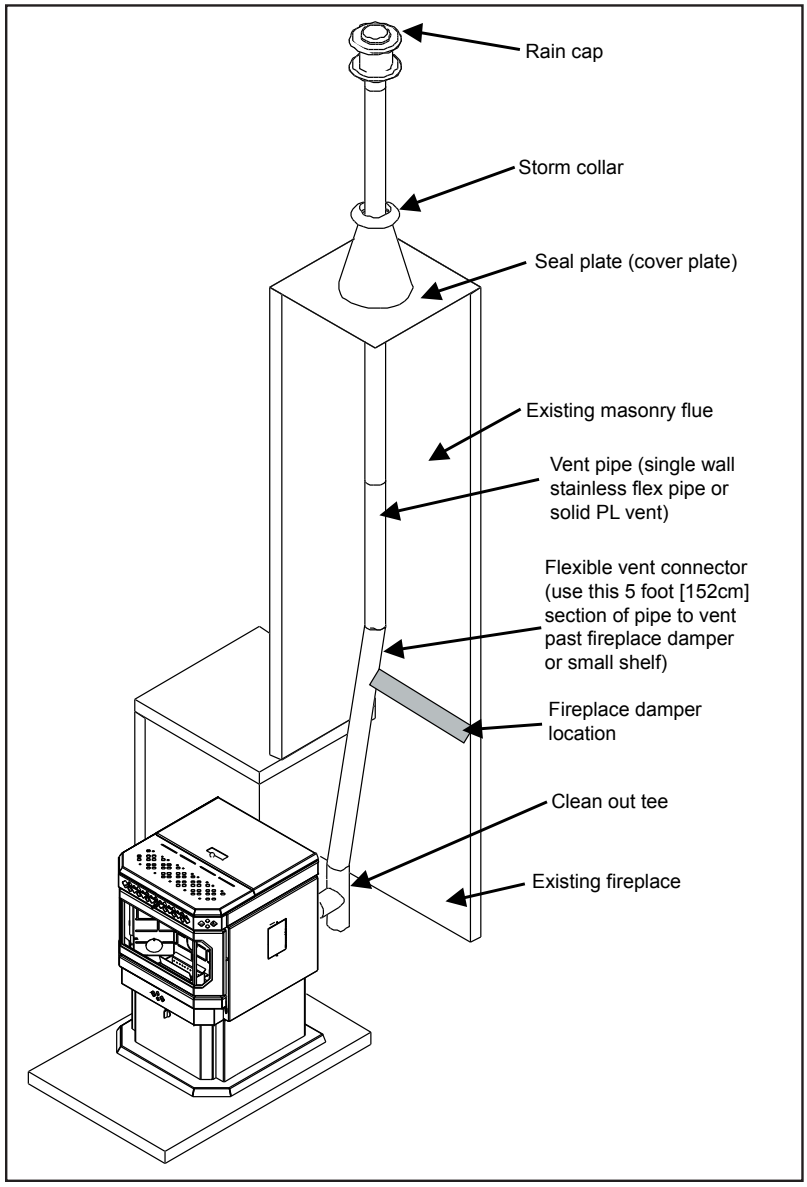

Figure 28: Freestanding hearth mount installation overview.

Masonry Fireplace Installation - Fireplace Insert:

The fireplace insert model requires a surround panel and a pedestal. When installing this unit, ensure that the pedestal is removed from the inside of the hopper and installed on the bottom of the unit (see "Pedestal Installation").

Assemble surround panel (see "Assembling The Surround Panel - Fireplace Insert") before starting installation.

A non-combustible hearth pad must cover combustible flooring underneath, as well as 6" (150 mm) in front of the heater and 6" (150 mm) to the side of the heater.

1. Install the hearth pad.
2. Lock the fireplace damper in the open position.
3. Install a positive flue connector at the fireplace damper.

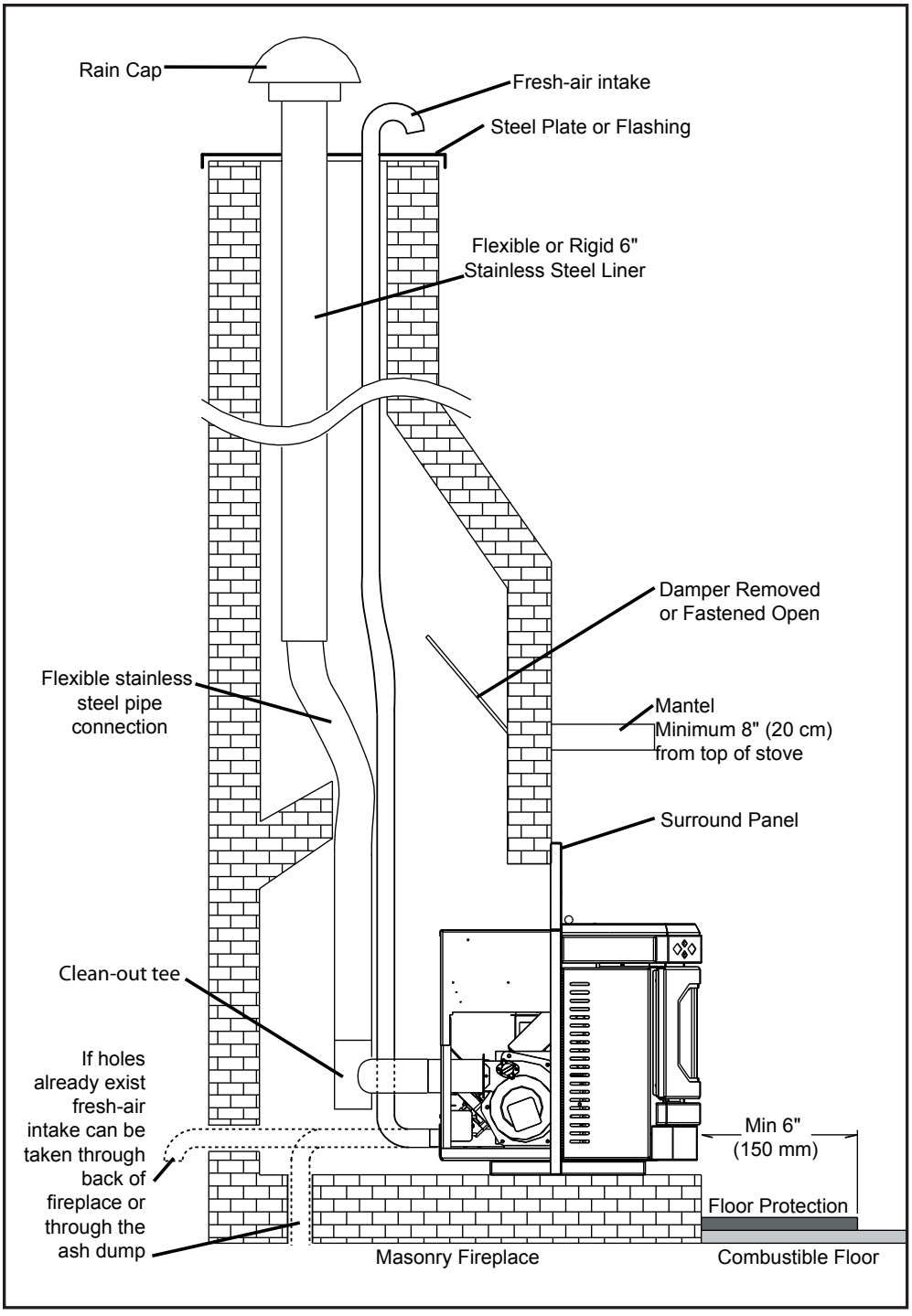

Figure 29: Masonry fireplace installation.

4. Connect a tee or 90° degree elbow to the exhaust pipe.
5. This fireplace insert must be installed with a continuous chimney liner of 3″ or 4″ diameter extending from the fireplace insert to the top of the chimney. The liner must conform to type 3 requirements of CAN/ ULC S635.
6. (Recommended) Install fresh air intake either through the back of the fireplace or through the positive flue connector.

WARNING: When installing the insert into a masonry fireplace, DO NOT remove any bricks or masonry, with the following exception: masonry or steel, including the damper plate, may be removed from the smoke shelf and adjacent damper frame, if necessary, to accommodate a chimney liner. Do this only if their removal will not weaken the structure of the fireplace and chimney, and will not reduce protection for combustible materials to less than that required by the national building code.

Installation

Installation Into Factory Built Fireplaces:

When installing the fireplace insert into a zero clearance fireplace, **DO NOT** cut or modify any factory firebox parts. If the fireplace insert does not fit into a zero clearance fireplace, we recommend you use a freestanding model and install as a hearth mounted unit. Install a 3" (76 mm) flex pipe from the stove to the top of the chimney (see "Hearth Mount Installation - Freestanding:").

1. This insert must be tested and meet requirements of UL 1482 ULC S629 when tested in a masonry fireplace built per ULC S628
2. The factory built fireplace must be listed per UL 127 or ULC S610
3. Installation must include a full height listed chimney liner meeting type HT requirements. This liner must be securely attached to the insert flue collar and the chimney top.
4. Means must be provided to prevent room air passage to the chimney cavity of the fireplace. This may be accomplished by sealing the damper area around the chimney liner or sealing the fireplace front.
5. The air flow within and around the fireplace shall not be altered by the installation of the insert (no louvers or cooling air or outlet ports blocked) unless specifically tested as such for each factory built fireplace manufacture and model line. (NOTE: using a louver faceplate complies with the requirement).
6. Alteration of the fireplace in any manner is not permitted with the following exceptions: external trim pieces which do not effect the operation of the fireplace may be removed providing they can be stored on or with the fireplace for re assembly if the insert is removed. The chimney damper may be removed to install the chimney liner.
7. Circulating chambers may not be blocked.
8. Means must be provided for removal of the insert to clean the chimney flue.
9. Insert that projects in front of the fireplace must be supplied with appropriate supporting means

A permanent metal warning label must be attached to the back of the fireplace stating that the fireplace must be restored to its original condition for safe use with out the insert.

Installation of Control Panel into Surround Panel - Insert:

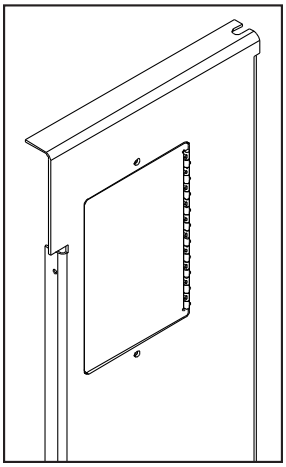

Figure 30: Control Panel Cover.

When installing the control panel into the surround panel, the surround does not need to be assembled. The control board will be found in behind the firebox.

Place the control panel on the backside of the right surround panel so the hinge is on the outside and the top and bottom holes on the control panel line up with those on the surround. Attach using two (2) T-20 screws through the front of the surround into the circuit board control panel.

After the surround has been assembled and is ready to be installed on the unit, plug the wiring harness into the control panel (see Figure 31).

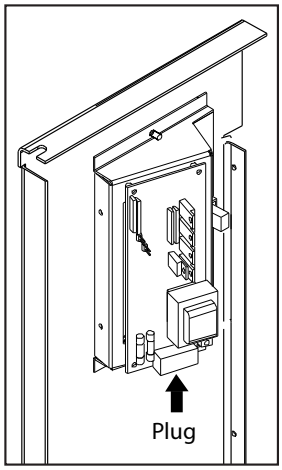

Figure 31: Control Panel Back.

Installation and Removal of The Surround Panels - Insert:

1. Attach one side trim to the top trim, using a corner bracket (see Figure 32) to secure pieces together. There are two (2) main pieces to each corner bracket (see Figure 33). When installing the corner pieces into the trim, the "B FACE" sides must face each other and the screw heads are to face out. With the bracket in place and the top and a side trim snug together, use a flat head screwdriver to turn the two (2) screws in the bracket to tighten it into the trim.

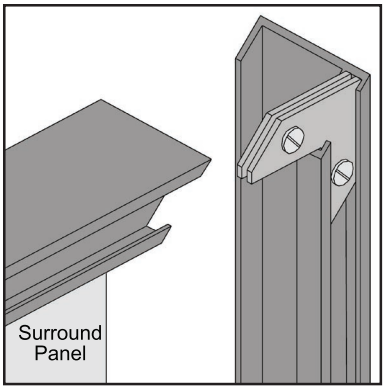

Figure 32: Corner brackets for trim.

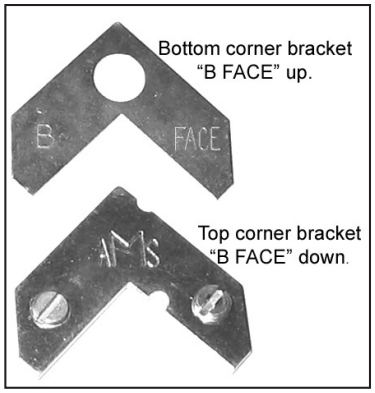

Figure 33: Two pieces of corner bracket.

2. Attach the other side trim piece to the top trim, using the same method used in Step 1.
3. Using three (3) T-20 screws on each side attach the hinges on the side surround panels to the unit's side panels (refer to Figure 34).
4. Plug the wiring harness into the control panel (see Figure 31).

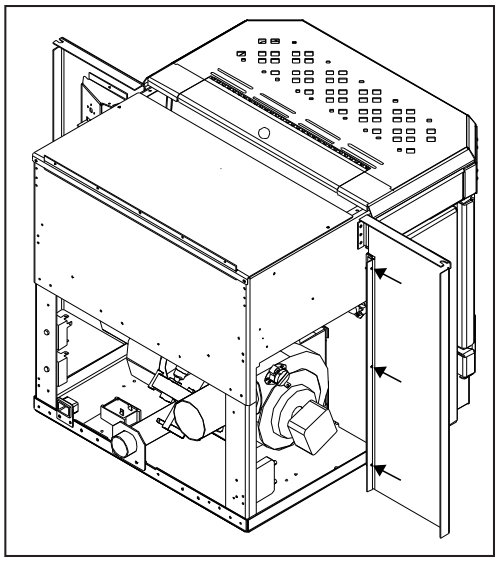

Figure 34: Panel placed on unit.

5. Loosen the front hopper lid screws and center the top surround panel under the hopper lid., tighten screws.
6. Insert each side panel anchor bolt through the top panel into the corresponding side panel holes and tighten using a $^{7}/_{16}$" wench or socket (refer to Figure 35).
7. Place assembled trim over the surround assembly.

REMOVAL:

When maintenance is required on the unit the surround must be removed. Follow steps 4 through 7 in reverse order.

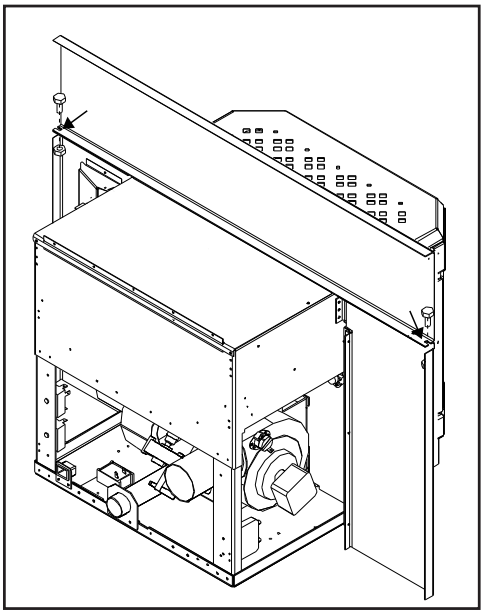

Figure 35: Assembling the Surround Panel, back view.

The side panel can remain attached because they swing forward for easy access (refer to Figure 36).

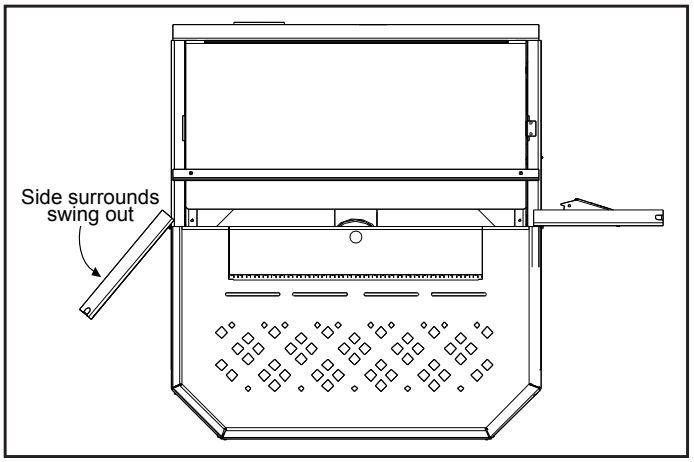

Figure 36: Side surround panel swings forward.

Installation

Thermostat Installation:

1. Install the wall thermostat in a location that is not to close too the unit but will effectively heat the desired area.
2. Install a 12 or 24 Volt Thermostat using an 18 x 2 gauge wire from the unit to the thermostat.

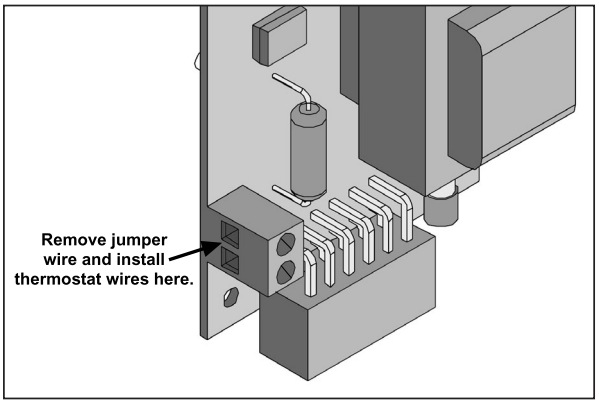

Figure 37: Thermostat wire placement.

If the unit has been placed in the HI / LOW mode, the unit will be taken to a low or idle setting when the thermostat is not calling for heat. When the thermostat calls for heat, the unit will go to the setting that is displayed on the control board Heat Indicator. If the heating load is not great enough when the stove is on low, the high limit switch will turn the stove off and the switch will have to be manually reset. To reset the high limit switch, remove the right cabinet side. The switch is found behind the control panel. Avoid setting off the high limit switch.

The Tube Scraper Rod:

Put the stainless steel rod through the hole in the heat exchanger located behind the top louvers. Thread the rod into the scraper plate, which is visible from inside the firebox by removing the top baffle.

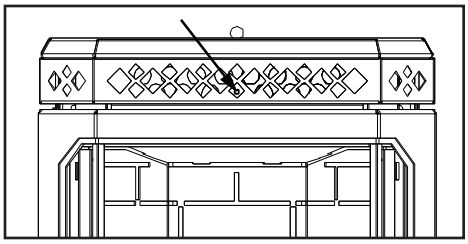

Figure 38: Tube scrapper rod placement.

Slider/Damper Installation:

This is used to regulate the airflow through the pellet stove.

1. Remove the slider rod (short rod with knob and nuts) from their package and open the left side panel.
2. Remove the knob and outer nut from the knob. Push the rod through the hole in the slider. Place the lock nut on the rod and tighten, leaving a 1/32" (1 mm) gap between the slider and the other nut.
3. Make sure the slider moves freely. Close the side panel and tighten screws after placing the rod through the panel. Screw the knob onto the slider.
4. See "Slider/Damper Setting:".

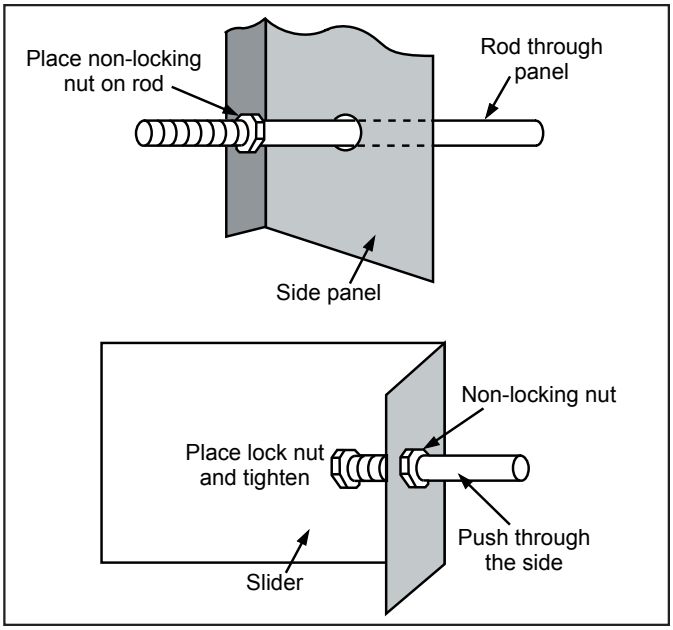

Figure 39: Slider / damper assembly.

Troubleshooting

DO NOT:

- Hold the ON / OFF BUTTON down for circuit board model or hold the start-up switch down for timer control. This is a momentary contact switch and can be damaged if held down too long.
- Service the stove with wet hands. The stove is an electrical appliance, which may pose a shock hazard if handled improperly. Only qualified technicians should deal with possible internal electrical failures.
- Remove any screws in the firebox without first lubricating them with penetrating oil.

WHAT TO DO IF:

1. The stove will not start.
2. The stove will not operate when hot.
3. The exhaust blower will not function normally.
4. The convection blower will not function normally.
5. Ignitor - Everything else in the stove operates but the ignitor will not light the pellets.
6. The auger motor does not function normally.
7. Control settings (heat level) have no effect on fire.
8. The 200°F (93°C) high limit temperature sensor has tripped.
9. The stove will not shut off.
10. The stove keeps going out.
11. Light # 2 on Heat output bar flashing.

***NOTE: All troubleshooting procedures should be carried out by qualified technicians or installers.**

1. The stove will not start.

- ✓ Make sure the stove is plugged in and the wall outlet is supplying power.
- ✓ If the Control Board has been placed in the ON /OFF thermostat mode, then turn the thermostat up to call for heat.
- ✓ Check the Heat Level Indicator. - If the # 2 light is flashing (see the # 2 light is flashing)
- ✓ Check the fuse on the circuit board.
- ✓ If the unit still does not start, contact your local dealer for service.

2. The stove will not operate when hot.

- ★ Check the hopper for fuel.
- ★ Incorrect air damper setting - Excessive air may consume the fire too quickly before the next drop of fuel, leaving completely unburned fuel in the burn pot liner. Insufficient air will cause build up, further restricting the air flow through the Burn Pot Liner. This in turn will cause the fuel to burn cold and very slowly. Fuel may build up and smother the fire. **(NOTE: Unit may require a change to the vent system or installation of fresh air to correct Air to Fuel ratio problems).**
- ★ Combustion Blower failure - The Combustion Blower is not turning fast enough to generate the proper vacuum in the fire box. Visual Check – is the blower motor turning?
- ★ Check Vacuum levels in the exhaust channel by bypassing the Vacuum Switch, then remove the Vacuum hose from Vacuum Switch. Check exhaust vacuum readings by placing the open end of the Vacuum Hose on a Magnahelic Gauge (readings must be above 0.10" W.C. on low fire).
  Note: If the motor fails to reach a 0.10" W.C. reading, then replace the Combustion Blower.
- ★ Poor Quality Fuel – Insufficient energy in the fuel to produce enough heat to keep the stove burning or operational.

★ Exhaust Temperature Sensor failure – Bypass sensor located on Exhaust Blower. If stove now operates properly, the unit may require cleaning or a new sensor. Contact your local dealer for service.
★ Check the Heat Level Indicator if a fire is not detected, or if the fire has gone out **the #3 light will flash** because the Exhaust Temperature Sensor's contacts have opened.
★ Check the Exhaust Blower voltage across the blower wires (>=114V on #5 setting and >= 52V on #1 setting). – Replace the Circuit Board if the Voltage reading is less than 82 V. with a line voltage >115 VAC.
★ Exhaust Temperature Sensor failure. – Bypass sensor located on Exhaust Blower if stove now operates properly, the unit may require cleaning or a new sensor. Contact your local dealer for service.
★ Check the fuse on the circuit board.
★ The unit may require cleaning.

3. The exhaust motor will not function normally.

✓ Open the left side access panel; check all connections against the wiring diagram.
✓ See "2. The stove will not operate when hot." section.

4. The convection blower will not function normally.

★ Clean all grill openings at the back and below unit.
★ Press the fan button. Does the fan come on? Press again to verify that the blower turns on. If no, contact your local dealer for service.

5. Ignitor - Everything else in the stove operates but the ignitor will not light the pellets.

✓ Check the burn pot liner placement.
✓ Make sure the burn pot liner is up tight and square to the ignitor tube (by pushing the burn pot back against the ignitor tube).
✓ Check the fuse on the circuit board.
✓ Check to see if the exhaust blower is operating. If not, contact your local dealer for service.

NOTE: The ignitor should be bright orange in color. If not, replace the ignitor.

6. The auger motor will not function normally.

★ If the Auger gear box does not turn but the motor's armature does try to spin then the auger is jammed. – Try to break apart jam by poking at the jam through the drop tube. If this fails then empty the hopper and remove the Auger Cover **Remember to re-seal the cover after installation**
★ Check the fuse on the circuit board.

7. Control settings (Heat Level) have no effect on the fire .

✓ If the system light is flashing, the Control Board has complete control of the unit. When the unit's system light becomes solid, then control of the unit is given back to the operator.
✓ If there is no control of the Heat Level button, make sure the thermostat is calling for heat.
✓ Call your local dealer for service.

8. The 200°F (93°C) high limit temperature sensor has tripped.

★ Reset the sensor and determine the cause - was it convection blower or 160°F (71°C) temperature sensor failure? Bypass the 160°F (71°C) sensor. Does the convection blower come on high? If no, replace the blower.

9. The stove will not shut off.

- ✓ If the unit will not shut off, ensure that the thermostat (if equipped) is turned down below the room temperature (thermostat mode in the ON / OFF position).
- ✓ If the unit is in the HI/LOW mode the unit will not shut off but will go to an idle setting (LOW). Press the ON/OFF button to turn the unit off.
- ✓ Disconnect one of the brown wires from the exhaust temperature sensor. If the unit continues to operate, contact your local dealer for service.

10. The stove keeps going out

If the stove goes out and leaves fresh unburned pellets or cigarette-like ashes in the burn pot liner, the fire is going out before the stove shuts off.

- ★ Check to see that the Slider / Damper is in the correct position.
- ★ Turn the Heat Level up slightly (poor quality pellets will require slightly higher settings).
- ★ Set the auger trim till the #1 and #5 lights are illuminated.

If the stove goes out and there are partially burned pellets left in the burn pot liner, the stove has shut down due to a lack of air, exhaust temperature, or power failure.

- ★ Adjust the Slider / Damper.
- ★ Check to see if the stove needs a more complete cleaning.
- ★ Turn the Heat Level up slightly (poor quality pellets will require slightly higher settings).
- ★ Did the power go out?

If the stove goes out and there are no pellets in the liner, the auger is stopping.

- ★ See "The auger motor will not function normally" and "The exhaust blower will not function normally."

11. Light # 2 on Heat output bar flashing.

(The Vacuum Switch contacts have opened for more than 15 sec.)

- ✓Pinch, break or blockage in Vacuum Hose - Check hose for pinch points or damage, replace or re-route as required. Blow out Vacuum Hose
- ✓Blocked Hose Barb on Exhaust Channel - Use a paper clip to clean out Hose Barb or remove the Vacuum Hose from the Vacuum Switch and blow into the hose to remove blockage.
- ✓Blocked exhaust / venting system - Have stove and venting cleaned and inspected.
- ✓Severe negative pressure in area where unit is installed - Check the operation by opening a window, does this solve the problem? If it does, install fresh air intake to unit or room. Venting system may require vertical section to move termination into a low pressure zone.
- ✓Vacuum Switch failure - Bypass the vacuum switch, if this corrects the problem check for above problems before replacing the Vacuum Switch.
- ✓Damage to gray wires between Circuit Board and Vacuum Switch - Inspect wires and connectors
- ✓Combustion Blower failure - The Combustion Blower is not turning fast enough to generate the proper vacuum in the Exhaust Channel. Visual Check; is the blower motor turning? Check the Exhaust Blower voltage across the blower wires (>=114V on #5 setting and >= 82V on #1 setting). – Replace the Circuit Board if the Voltage reading is less than 82 V. with a line voltage >115V AC.
- ✓Check Vacuum levels in the exhaust channel by bypassing the vacuum switch, then remove the Vacuum hose from Vacuum Switch. Check exhaust vacuum readings by placing the open end of the Vacuum Hose on a Magnahelic Gauge. (readings must be above .10" W.C. on low fire).

  If the motor fails to reach a 0.10" W.C. readings, then replace the Combustion Blower

To reset Circuit Board after a trouble code - push the ON/OFF button

Wiring Diagram

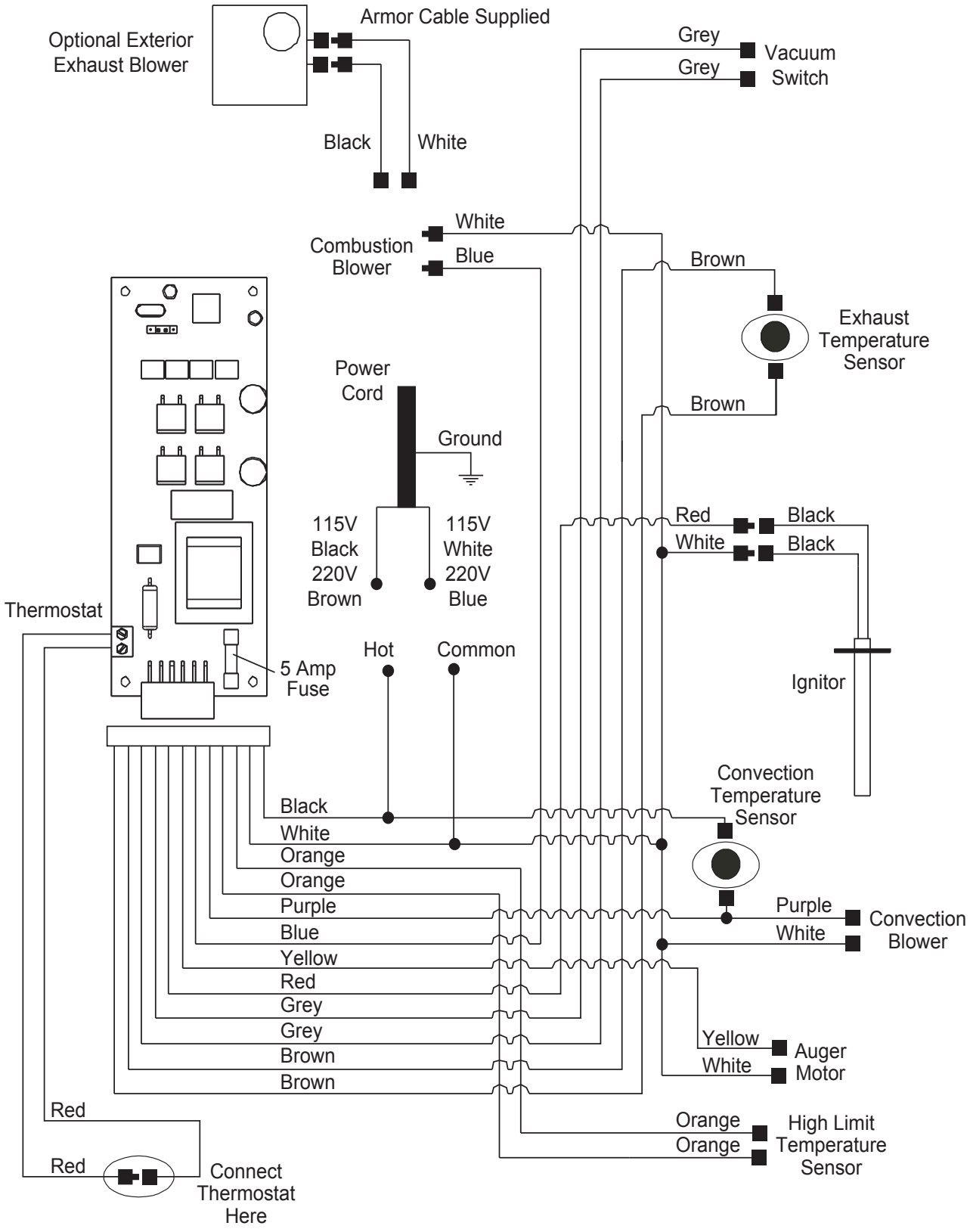

Parts List

Reference Number	Description	Part Number
1	Exhaust Temperature Sensor 120°F (60°C)	EC-001
	Power Cord - 115V	EC-042
2	Auger Motor - 115V	EF-001
3	Convection Blower - 115V	EF-002
	Convection Blower Impeller	EF-004
	Convection Blower Insulator (Gasket)	EF-006
	Combustion Main Impeller	EF-008
	Combustion Cooling Impeller	EF-009
	Combustion Blower Mounting Gasket	EF-011
	Combustion Blower Housing Gasket	EF-012
4	Fan Temperature Sensor 160°F (71°C)	EF-013
5	Ignition Temperature Sensor 120°F (49°C) Ceramic	EF-015
6	High Limit Temperature Sensor 200°F (93°C) Manual Reset	EF-016
7	Vacuum Switch - 115V	EF-017
	Silicone Hose	EF-018
	Aluminum Hose Barb	EF-019
8	Ignition Burn Pot	EF-021
9	Auger	EF-025
10	Auger Brass Bushing & Plate	EF-026
11	Door Handle Complete	EF-028
	Door Handle Hardware Only	EF-029
12	Firebox Liner With Insulation	EF-047
	Slider Damper Rod With Knob	EF-050
	Heat Exchanger Rod With Knob	EF-051
	Tapped Corner Bracket	EC-053
	⅝" Door Gasket 7' (2.1 m)	EF-056
	Window Channel Tape 60" (1.5 m)	EF-058
13	Insert Hopper Lid Knob & Stud Only	EF-059
14	Insert Ash Pan Latch	EF-060
15	Glass Set With Tape	EF-062

Parts List

Reference Number	Description	Part Number
	Slider Damper Plate	EF-064
16	Auger Brass Bushings (Set of 2)	EF-065
	Firebox Liner Top Plate	EF-066
	¾" ID Auger Collar with Set Screw	EF-069
	Knob 1 Inch Round	EF-070
17	Freestanding Back Grill	EF-097
18	Freestanding Hopper Lid With Handle	EF-104
19	Fireplace Insert Ash Pan Drawer With Latch	EF-105
20	Ash Sill	EF-121
21	Insert Hopper Cover	EF-122
	Shoulder Bolt, Hardened Bush & Nut (Set of 2)	EF-124
	Firebox Ceramic Wool Insulation	EF-126
22	Steel Brick Lining	EF-129
23	Freestanding Right Cabinet Side	EF-133
24	Freestanding Left Cabinet Side	EF-134
	Ignitor Tube Only	EF-140
	Freestanding Hopper Lid Hinge	EF-141
25	Freestanding Hopper Side Rail (Left & Right)	EF-143
26	Insert Hopper Side Rail (Left & Right)	EF-145
	Pellet Stove Cleaning Brush	EF-156
27	Freestanding Ash Pan Latch	EF-178
	Insert Ash Pan Cover Magnet Set	EF-188
28	Firebox Cleaning Port Covers	EF-194A
29	Insert Hopper Lid With Knob, Stud, and Hinge	EF-202
	Pedestal & Ash Pan Gasket 10' (3 m)	EF-208
30	Insert Regular Panel with Black Trim	VF100-001
31	Insert Oversized Panel with Black Trim	VF100-002
32	Insert Pedestal	VF100-003
33	Door Cover - Gold	VF100-004
33	Door Cover - Nickel	VF100-005
33	Door Skin	VF-50277

Parts List

Reference Number	Description	Part Number
33	Door Complete	VF-50278
	Insert Regular Trim Only - Brass	VF100-006
	Insert Regular Trim Only - Nickel	VF100-007
	Insert Oversized Trim Only - Brass	VF100-008
	Insert Oversized Trim Only - Nickel	VF100-009
34	Freestanding Pedestal Complete	VF-50271
35	Top - Freestanding	VF-50272
36	Top - Insert	VF-50273
37	Front Grill	VF-50274
38	Bottom Grill	VF-50275
	Door Hinge	VF-50276
	Owner's Manual	VF-50279
	Log Set	20-036
39	Control Panel Door	20-040
	Control Panel Touch Latch	50-323
40	Combustion Blower Exhaust Tube	50-327
	Combustion Blower - 115V	50-473
41	Stainless Steel Burn Pot Liner - Standard	50-474
	Flush Handle for Hopper Lid (Freestanding)	50-523
	Convection Blower Mount	50-524
42	Stainless Steel Burn Pot Liner - High Ash	50-587
	Firebox Liner Top Rod	50-591
	Door Hinge Bracket	50-604
43	Fireplace Insert Cabinet Side Right	50-751
44	Fireplace Insert Cabinet Side Left	50-752
	Glass Extrusions (Set of 2)	50-767
45	Exhaust Blower Assembly - 115V	50-901
46	Ignitor 300 Watt	50-1067
47	Circuit Board Control Panel with Decal	50-1475
48	Circuit Board Decal	50-1476
49	Circuit Board with Thermostat Switch - 115V	50-1477

Parts Diagram - Components

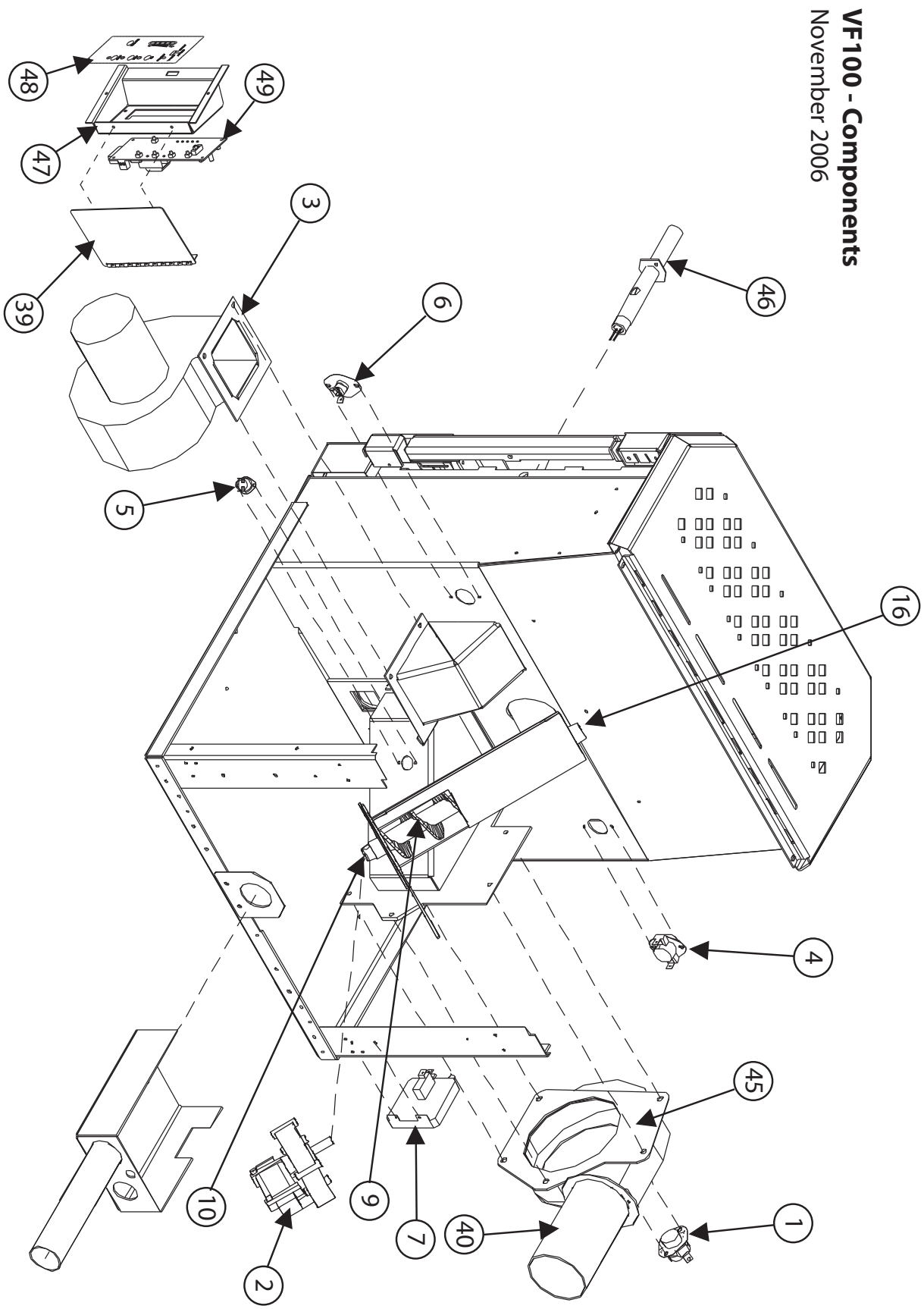

Parts Diagram - Steel

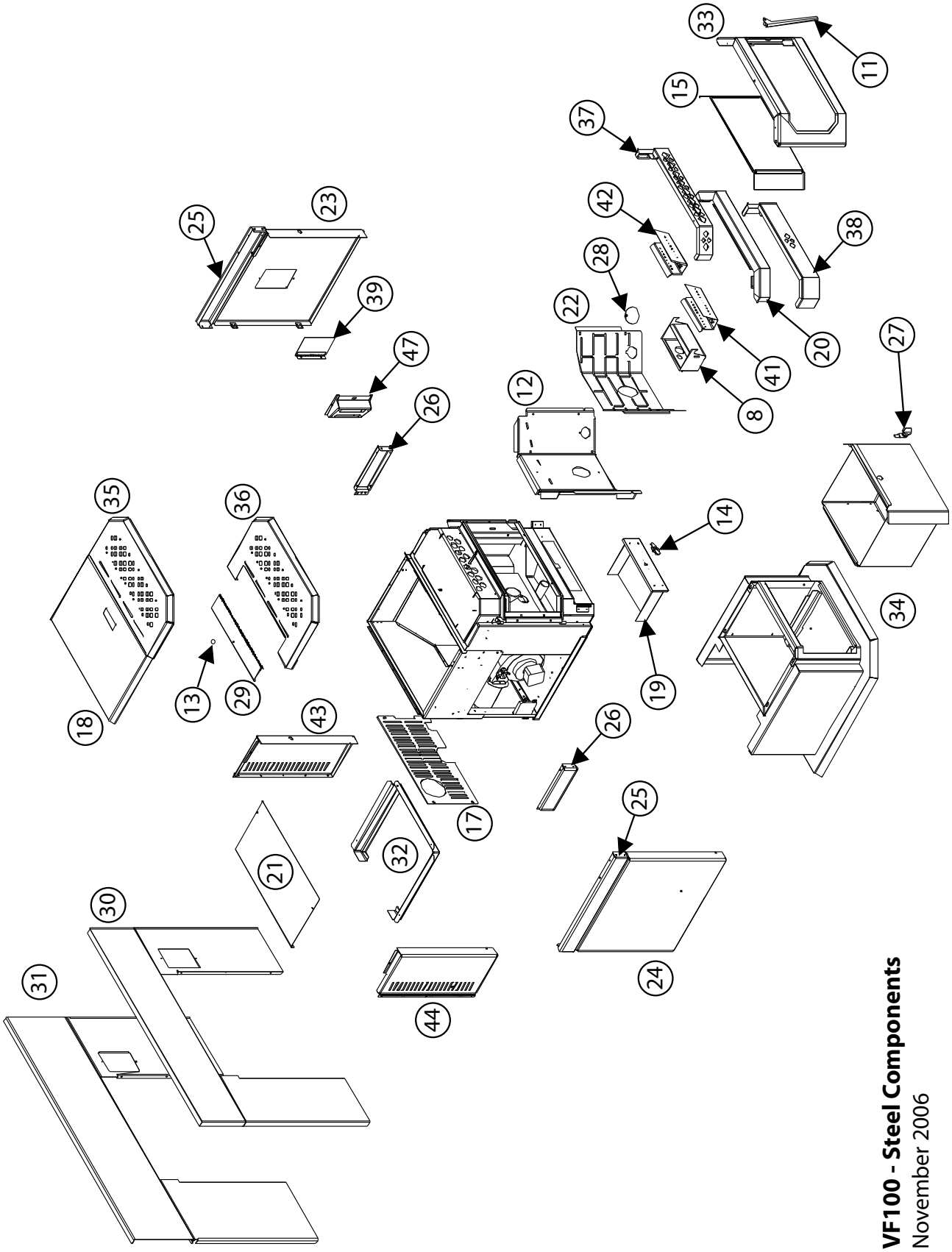

VF100 - Steel Components
November 2006

Warranty

Sherwood Industries Ltd. is the manufacturer of the VistaFlame line of heating products. At Sherwood Industries, our commitment to the highest level of quality and customer service is the most important thing we do. Each VistaFlame stove is built on a tradition of using only the finest materials and is backed by our Exclusive Lifetime Limited Warranty to the original purchaser. With VistaFlame, you're not just buying a stove, you're buying a company with years of unequalled performance and quality.

Limited Lifetime Warranty:
Under this warranty, Sherwood Industries Ltd. covers the fireplace or stove body and accessories against defects in materials and workmanship, for part repair or replacement for the first seven (7) years and limited labour for the first two (2) years to the original purchaser. This Warranty covers: Firebox, Heat Exchanger, Burn Pot, Firebox Panels, Ceramic Glass, Pedestals, Panels, Legs, Log Sets and Door Assembly. Please see the exclusions and limitation section below as certain restrictions and exclusions apply to this warranty.

Limited Three (3) Year Warranty
Under this warranty, Sherwood Industries Ltd. covers the Burn Pot Liner against defects in materials and workmanship, for part repair or replacement for the first three (3) years and limited labour for the first two (2) years to the original purchaser. Please see the exclusions and limitation section below as certain restrictions and exclusions apply to this warranty.

Limited Two (2) Year Warranty:
Under this warranty, Sherwood Industries Ltd. covers: Ignitor, Auger Motor, Circuit Board, Timers, Temp Sensors, Blowers, Vacuum Switch and Wire Harness, against defects in materials and workmanship, for part repair or replacement for the first two (2) years and limited labour for the first two (2) years to the original purchaser. Please see the exclusions and limitation section below as certain restrictions and exclusions apply to this warranty.

Limited One (1) Year Warranty:
Under this warranty, Sherwood Industries Ltd. covers all exterior surface finishes against defects in materials and workmanship, for part repair or replacement and limited labour for the first (1) year to the original purchaser. Please see the exclusions and limitation section below as certain restrictions and exclusions apply to this warranty.

Here is how our Warranty works
If you have any concerns with your VistaFlame product please contact the dealer where you purchased the fireplace or stove. Your dealer shall make all claims under this warranty in writing.

To the Dealer
When filling out a warranty claim please complete the following information on an official warranty claim form:

Customer information: Name, address and telephone number of purchaser and date of purchase.

Dealer information: Date of installation, name of installer and dealer, serial number of the appliance, nature of complaint, defects or malfunction, description and part numbers of any parts replaced.

To the Distributor
Sign and verify that work and information are correct.

Warranty

Exclusions and Limitations:

1. This Warranty does not cover tarnish, discoloration or wear on the plating or paint.
2. This Warranty excludes wear and tear or breakage caused by cleaning, moving or service on log set.
3. A qualified installer must install this stove or fireplace. This Limited Warranty covers defects in materials and workmanship only if the product has been installed in accordance with local building and fire codes; in their absence, refer to the owner's manual. If the product is damaged or broken as a result of any alteration, willful abuse, mishandling, accident, neglect, or misuse of the product, the Limited Warranty does not apply.
4. The stove must be operated and maintained at all times in accordance with the instructions in the Owner's Manual. If the unit shows signs of neglect or misuse, it is not covered under the terms of this Warranty policy. Performance problems due to operator error will not be covered by the Limited Warranty policy.
5. As this is a heating appliance some changes in colour of surface finishes may occur. This is not a flaw and as such is not covered under this warranty.

6. Some minor expansion, contraction, or movement of certain parts and resulting noise, is normal and not a defect and, therefore, is not covered under this Limited Warranty.
7. Misuse includes over-firing. Over-firing this appliance can cause serious damage and will nullify the Limited Warranty.
8. The Limited Warranty will cover glass thermal breakage only and will not cover misuse of the stove glass, including but not limited to glass that is struck, has surface contaminates or has had harsh or abrasive cleaners used on it.
9. This warranty does not cover products made or provided by other manufacturers and used in conjunction with the operation of this stove without prior authorization from Sherwood Industries Ltd. The use of such products may nullify the Limited Warranty on this stove. If unsure as to the extent of this Limited Warranty, contact your authorized VistaFlame dealer before installation.
10. Sherwood Industries Ltd. will not be responsible for inadequate performance caused by environmental conditions.
11. The Limited Warranty does not cover installation and operational related problems such as spillage caused by environmental conditions. Environmental conditions include but are not limited to nearby trees, buildings, roof tops, wind, hills, mountains, inadequate venting or ventilation, excessive offsets, negative air pressures or other influences caused by mechanical systems such as furnaces, fans, clothes dryers etc.
12. The Limited Warranty is void if:
    a) The stove has been operated in atmospheres contaminated by chlorine, fluorine or other damaging chemicals.
    b) The stove is subject to submersion in water or prolonged periods of dampness or condensation.
    c) Any damage to the unit, combustion chamber or other components due to water, or weather damage which is the result of, but not limited to, improper chimney/venting installation.
    c) Salt air in coastal areas or high humidity can be corrosive to the finish; these environments can cause rusting. Damage caused by salt air or high humidity is not covered by the Limited Warranty.
13. Exclusions to the Limited Warranty include: injury, loss of use, damage, failure to function due to accident, negligence, misuse, improper installation, alteration or adjustment of the manufacturer's settings of components, lack of proper and regular maintenance, alteration, or act of God.
14. The Limited Warranty does not cover damage caused to the fireplace or stove while in transit. If this occurs, do not operate the stove and contact your courier and/or dealer.
15. The Limited Warranty does not extend to or include firebox paint, door or glass gaskets with damage caused by normal wear and tear, or exterior paint discoloration or chipping, worn gaskets, etc.
16. The Limited Warranty does not include damage to the unit caused by abuse, improper installation, or modification of the unit.

17. Damage to plated surfaces caused by fingerprints, scratches, melted items, or other external scores and residues left on the plated surfaces from the use of abrasive cleaners or polishes is not covered in this warranty.
18. The Limited Warranty does not cover tarnish, discoloration or wear on the plated surfaces.
19. The paint on the Metal Brick Liner may peel. This is due to the extreme conditions applied to the paint during normal usage. It is not a flaw and is not covered under warranty.
20. Sherwood Industries Ltd. is free of liability for any damages caused by the fireplace or stove, as well as inconvenience expenses and materials. The Limited Warranty does not cover incidental or consequential damages.
21. The Limited Warranty does not cover any loss or damage incurred by the use or removal of any component or apparatus to or from the VistaFlame fireplace or stove without the express written permission of Sherwood Industries Ltd. and bearing a Sherwood Industries Ltd. label of approval.
22. Any statement or representation of VistaFlame products and their performance contained in VistaFlame advertising, packaging literature, or printed material is not part of the Limited Warranty.
23. The Limited Warranty is automatically voided if the fireplace or stove's serial number has been removed or altered in any way. If the stove is used for commercial purposes, it is excluded from the Limited Warranty.
24. No dealer, distributor, or similar person has the authority to represent or warrant VistaFlame products beyond the terms contained within the Limited Warranty. Sherwood Industries Ltd. assumes no liability for such warranties or representations.
25. Sherwood Industries Ltd. will not cover the cost of the removal or re-installation of the stove, hearth, facing, mantels, venting or other components.
26. Labour to replace or repair items under this Limited Warranty will be covered per our warranty service fee reimbursement schedule. Labour rates are set per component and as such total labour costs may not be covered.
27. Sherwood Industries Ltd. is not liable for freight or labour on any stove replaced in-field and is not liable for travel costs for service work. In the event of in-home repair work, the customer will pay any in-home travel fees or service charges required by the Authorized Dealer.
28. At no time will Sherwood Industries Ltd. be liable for any consequential damages which exceed the purchase price of the unit. Sherwood Industries Ltd. has no obligation to enhance or modify any stove once manufactured (example: as a stove evolves, field modifications or upgrades will not be performed).
29. This Limited Warranty is applicable only to the original purchaser and it is non-transferable.
30. This warranty only covers VistaFlame products that are purchased through an authorized VistaFlame dealer.
31. If for any reason any section of the Limited Warranty is declared invalid, the balance of the warranty remains in effect and all other clauses shall remain in effect.
32. The Limited Warranty is the only warranty supplied by Sherwood Industries Ltd., the manufacturer of the stove. All other warranties, whether express or implied, are hereby expressly disclaimed and purchaser's recourse is expressly limited to the Limited Warranty.
33. Sherwood Industries Ltd. and its employees or representatives will not assume any damages, either directly or indirectly, caused by improper usage, operation, installation, servicing or maintenance of this stove.
34. Sherwood Industries Ltd. reserves the right to make changes without notice. Please complete and mail the warranty registration card and have the installer fill in the installation data sheet in the back of the manual for warranty and future reference.
35. Sherwood Industries Ltd. is responsible for stocking parts for a maximum of seven (7) years after discontinuing the manufacture or incorporation of the item into its products. An exception to this would be if an OEM supplier is not able to supply a part.

Installation Data Sheet

The following information must be recorded by the installer for warranty purposes and future reference.

NAME OF OWNER:

_____

ADDRESS:

_____

_____

_____

PHONE:_____

NAME OF DEALER:

_____

ADDRESS:

_____

_____

_____

PHONE:_____

MODEL:_____

SERIAL NUMBER:_____

DATE OF PURCHASE: _____ (dd/mm/yyyy)

DATE OF INSTALLATION:_____(dd/mm/yyyy)

MAGNEHELIC AT INSTALL:_____

INSTALLER'S SIGNATURE:

_____

NAME OF INSTALLER:

_____

ADDRESS:

_____

_____

_____

PHONE:_____

MANUFACTURED BY:
SHERWOOD INDUSTRIES LTD.
6782 OLDFIELD RD. SAANICHTON, BC, CANADA V8M 2A3
September 2, 2008
C-11530