SHERWOOD INDUSTRIES IS AN ENVIRONMENTALLY RESPONSIBLE COMPANY. THIS MANUAL IS PRINTED ON RECYCLED PAPER.

PLEASE KEEP THESE INSTRUCTIONS FOR FUTURE REFERENCE

Enviro

FOCUS

BY: SHERWOOD INDUSTRIES LTD

OWNER'S MANUAL

This appliance is only for use with the type of gas indicated on the rating plate. This appliance is not convertible for use with other gases, unless a certified kit is used.

FOR YOUR SAFETY: Do not store or use gasoline or other flammable vapours and liquids in the vicinity of this or any other appliance.

WHAT TO DO IF YOU SMELL GAS

- **Open windows/extinguish any open flame.**
- **Do not try to light any appliance.**
- **Do not touch any electrical switch or use any phone in your building.**
- **Immediately call your gas supplier from a neighbour's phone. Follow the gas supplier's instructions.**
- **If you cannot reach your gas supplier, call the fire department.**



INSTALLER: Leave this manual with the appliance. **CONSUMER:** Retain this manual for future reference.

WARNING: If the information in this manual is not followed exactly, a fire or explosion may result causing property damage, personal injury or loss of life. Installation and service must be performed by a qualified installer, service agency or the gas supplier.

INTERTEK C Warnock Hersey US

Massachusetts installations (Warning): This product must be installed by a licensed plumber or gas fitter when installed within the Commonwealth of Massachusetts. Other Massachusetts code requirements: Flexible connector must not be longer than 36in., a shut off valve must be installed; only direct vent sealed combustion products are approved for bedrooms/bathrooms. A carbon monoxide detector is required in all rooms containing gas fired direct vent appliances. The fireplace damper must be removed or welded in the open position prior to installation of a fireplace insert.

EG31-118

Safety Precautions

FOR SAFE INSTALLATION AND OPERATION OF YOUR "ENVIRO" HEATER, PLEASE CAREFULLY READ THE FOLLOWING INFORMATION:

- All ENVIRO gas-fired appliances must be installed in accordance with their instructions. Carefully read all the instructions in this manual first. Consult the building authority having jurisdiction to determine the need for a permit prior to commencing the installation.
- **NOTE:** Failure to follow these instructions could cause a malfunction of the fireplace, which could result in death, serious bodily injury, and/or property damage.
- Failure to follow these instructions may also void your fire insurance and/or warranty.

GENERAL

- Installation and repair should be done by a qualified service person. The appliance should be inspected before the first use and, at least, annually by a qualified service person. More frequent cleaning may be required due to excessive lint from carpeting, bedding material, etc. It is imperative the control compartments, burners and circulating air passageways of the appliance be kept clean.
- Due to high temperatures, the appliance should be located out of high traffic areas and away from furniture and draperies.

Children and adults should be alerted to the hazards of high surface temperatures and should stay away to avoid burn or clothing ignition.

- Young children should be carefully supervised when in the same room as the appliance.
- Clothing or other flammable materials should not be placed on or near the appliance.

FOR YOUR SAFETY

- Installation and service must be performed by a qualified installer, service agency or gas supplier.
- This installation must conform to local codes or, in the absence of local codes, to the current CAN/CGA-B149 installation code (Canada) or National Fuel Gas Code ANSI Z223.1.2 (USA)
- To prevent injury, do not allow anyone who is unfamiliar with the stove to operate it.
- **To prevent injury, if the pilot or pilot and burners have gone out on their own, open the glass door and wait 5 minutes to air out before attempting to re-light the stove.**
- Always keep the area around these appliances clear of combustible material, gasoline and other flammable liquids and vapours.
- These appliances should not be used as a drying rack for clothing or for hanging Christmas stockings/ decorations.
- Due to the paint curing on the stove, a faint odor and slight smoking will likely be noticed when the stove is first used. Open a window until the smoking stops.

Always connect this gas stove to a vent system and vent to the outside of the building envelope. Never vent to another room or inside the building. Make sure the specified vent pipe is used; properly sized and of adequate height to provide sufficient draft. Inspect the venting system annually for blockage and signs of deterioration.

WARNING: Failure to position the parts in accordance with the diagrams in this booklet, or failure to use only parts specifically approved with this appliance may result in property damage or personal injury.

WARNING: Do not operate with the glass front removed, cracked or broken. Replacement of the glass should be done by a licensed or qualified service person.

- Never use solid fuels such as wood, paper, cardboard, coal, or any flammable liquids, etc., in this appliance.
- Do not use this heater if any part has been under water. Immediately call a qualified service technician to inspect the heater and to replace any part of the control or gas control systems that have been under water.
- Do not abuse the glass by striking it or slamming the door shut.

Table of Contents

Safety Precautions....2
Table of Contents....3
Codes And Approvals....4
Specifications....5
- Dimensions....5
- Rating Label Location....5

Operating Instructions....6
- Lighting Instructions....6
- Adjusting Venturi Air Settings....7
- Blower speed....7
- Normal Sounds During Operation....7

Maintenance And Service....8
- Routine Maintenance....8
- Glass Door Removal....8
- Cleaning The Glass....8
- Cleaning The Firebox....8
- Replacing the Glass....8
- Maintaining Fascia And Surround Finishes....9
- Burner and Blower Removal....9
- Fuel Conversion....10

Initial Installation....12
- Clearances to Combustibles....12
- B Vent Model....12
- Automatic Flue Gas Spill Switch....12
- Direct Vent Model....13
- Direct Vent Restrictor Ring....13
- Preparing Your Focus For Installation....13
- Fan Controller & Burner Switch Installation....15
- Converting A Direct Vent Fireplace To A B-Vented Fireplace....16
- Converting A B-Vent Fireplace To A Direct Vented Fireplace....16
- Venting Fireplace Inserts....17
- Electrical Requirements....18
- Gas Line Connection....19

Secondary Installation....20
- Log Set and Ember Installation....20
- Brick Panel Installation....21

Trouble Shooting....22
Parts List - Components....23
Parts Diagram - Body....25
Parts List - Surrounds & Fascia....26
Parts Diagram - Surrounds & Fascia....27
Parts List - Cast....28
Parts Diagram- Cast Bay Front....30
Warranty....31
Installation Data Sheet....34

Codes And Approvals

DIRECT VENT: This type is identified by the suffix DV. This appliance draws all of its air for combustion from outside the dwelling, through a specially designed vent pipe system.
This appliance has been tested and approved for installations from 0 feet to 4500 feet (1372 m) above sea level.

BV: This Vented appliance draws all of its combustion air from the dwelling and must be vented using listed B or L vent. May also be vented through a conventional chimney using a chimney liner kit.
This appliance has been tested and approved for installations from 0 feet to 2000 (610 m) above sea level.

In the USA: The appliance may be installed at higher altitudes. Please refer to your American Gas Association guidelines which state: the sea level rated input of Gas Designed Appliances installed at elevations above 2000 (610 m) feet is to be reduced 4% for each 1000 feet (305 m) above sea level. Refer also to local authorities or codes which have jurisdiction in your area regarding the de-rate guidelines.

In Canada: When the appliance is installed at elevations above 4500 feet (1372 m), the certified high altitude rating shall be reduced at the rate of 4% for each additional 1000 feet (305 m).

- This appliance has been tested by INTERTEK (**Warnock Hersey**) and found to comply with the established VENTED GAS FIREPLACE HEATER standards in CANADA and the USA as follows:

VENTED GAS FIREPLACE HEATER (FOCUS BV/DV; NG/LPG)

TESTED TO: ANSI Z21.88a-2003/CSA 2.33a-2003 VENTED GAS FIREPLACE HEATERS

CAN/CGA 2.17-M91 GAS FIRED APPLIANCES FOR HIGH ALTITUDES

CSA P.4.1-02 TESTING METHOD FOR MEASURING ANNUAL FIREPLACE EFFICIENCY

This ENVIRO FOCUS Fireplace:

- Has been certified for use with either natural or propane gases. (See rating label.)
- Is not for use with solid fuels.
- Is approved for bedroom or bed sitting room. (**IN CANADA**: must be installed with a listed wall thermostat. **IN USA**: see current ANSI Z223.1 for installation instructions.)
- Must be installed in accordance with local codes. If none exist, use current installation code CAN/CGA B149 in Canada or ANSI Z223.1/NFPA 54 in the USA.
- Must be properly connected to an approved venting system and not connected to a chimney flue serving a separate solid-fuel burning appliance.
- Is not approved for closet or recessed installations.
- Must have inner flat unit glass installed before bay window can be installed.

IMPORTANT NOTICE (Regarding first fire up): When the unit is turned on for the first time, it should be turned onto high without the fan on for the first 4 hours. This will cure the paint, logs, gasket material and other products used in the manufacturing process. It is advisable to open a window or door, as the unit will start to smoke and can irritate some people. After the unit has gone through the first burn turn the unit off including the pilot, let the unit get cold then remove the glass door and clean it with a good gas fireplace glass cleaner, available at your local ENVIRO dealer.

NATIONAL FIREPLACE INSTITUTE®

NFI

CERTIFIED

www.nficertified.org

We recommend that our gas hearth products be installed and serviced by professionals who are certified in the U.S. by the National Fireplace Institute® (NFI) as NFI Gas Specialists.

Specifications

WARNING: Operation of this heater when not connected to a properly installed and maintained venting system can result in carbon monoxide (CO) poisoning and possible death.

Dimensions:

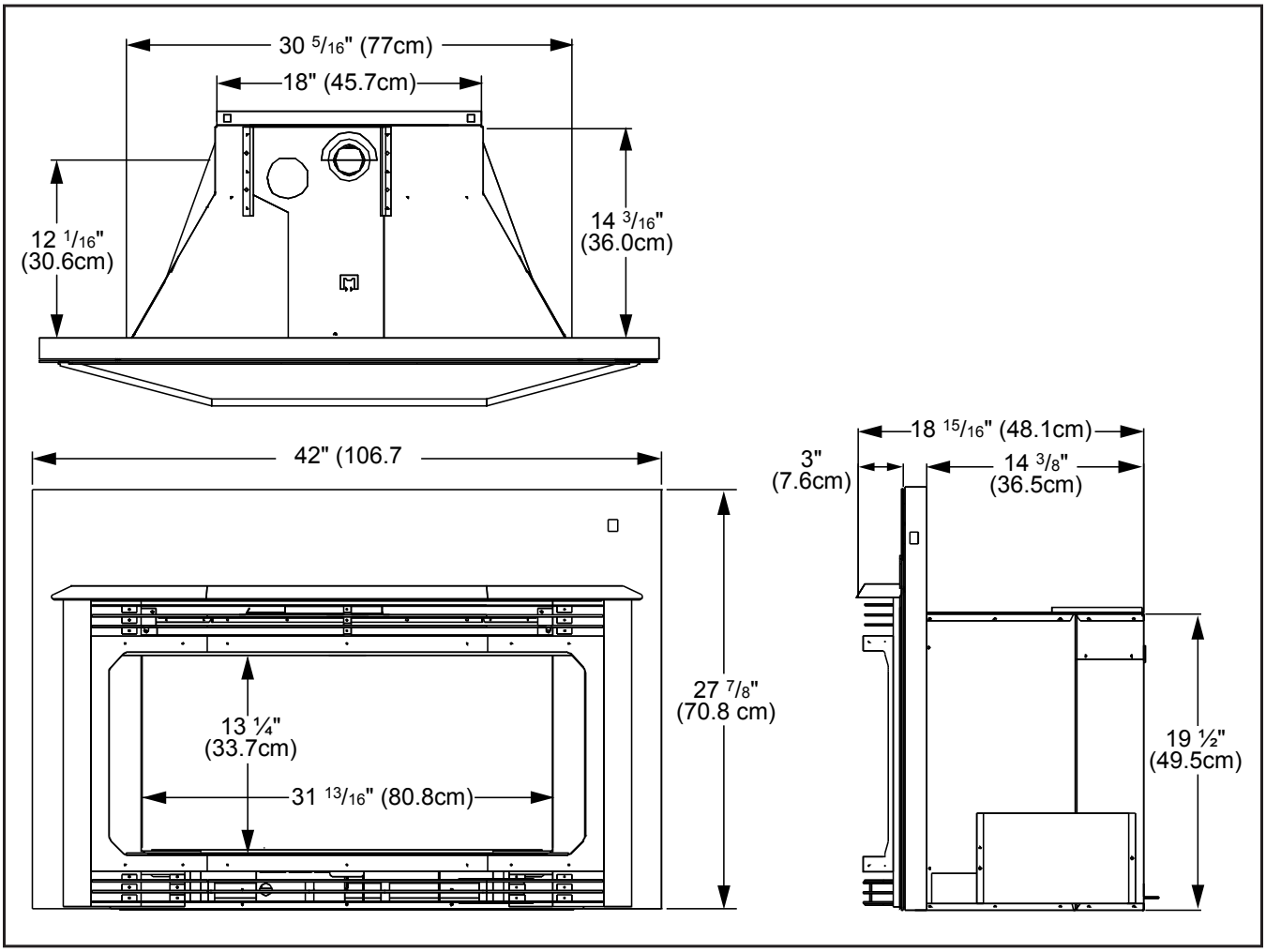

Figure 1: Focus Exterior Dimensions.

Rating Label Location:

The rating label is located under the control panel and is attached to a rectangular metal sheet that is chained to the fireplace.

Operating Instructions

For Your Safety, Read Safety Precautions And Lighting Instructions Before Operating

WARNING: IF YOU DO NOT FOLLOW THESE INSTRUCTIONS EXACTLY A FIRE OR EXPLOSION MAY RESULT, CAUSING PROPERTY DAMAGE, PERSONAL INJURY OF LOSS OF LIFE.

Lighting Instructions:

CAUTION: Hot while operating. Do not touch, severe burns may result. Keep children, clothing, furniture, gasoline or other flammable vapors away.

CAUTION: Do not operate this fireplace with the glass removed, cracked or broken. Replacement of the panel(s) should be done by a licensed or qualified person! This appliance needs fresh air for safe operation and must be installed with provisions for combustion and ventilation air. See installation and operating instructions manual. Keep burner and control compartment clean.
WARNING: Improper installation, adjustment, alteration, service or maintenance can cause injury or property damage, or loss of life. Refer to owner's information manual provided with this appliance. For assistance or additional information consult a qualified installer, service agency or the gas supplier. See installation and operating instructions accompanying appliance. Installation and service must be performed by a qualified installer, service agency, or the gas supplier.

FOR YOUR SAFETY READ BEFORE OPERATING

WARNING: IF YOU DO NOT FOLLOW THESE INSTRUCTIONS EXACTLY, A FIRE OR EXPLOSION MAY RESULT CAUSING PROPERTY DAMAGE, PERSONAL INJURY OR LOSS OF LIFE.

A) This appliance is equipped with a pilot, which must be lit by hand by following these instructions exactly.
B) BEFORE LIGHTING smell all around the appliance area for gas and next to the floor because some gas is heavier than air and will settle on the floor.
WHAT TO DO IF YOU SMELL GAS:
Do not try to light any appliance. Do not touch any electrical switch: do not use any phone in your building. Immediately call your gas supplier from a neighbor's phone. Follow the gas suppliers instructions. If you cannot reach your gas supplier, call the fire department.
C) Use only your hand to push in or turn the gas control knob; NEVER use tools. If the knob will not push in or turn by hand, do not try to repair it. Call a qualified service technician. Force or attempted repair may result in a fire or explosion.
D) Do not use this appliance if any part has been under water. Immediately call a qualified service technician to inspect the appliance and to replace any part of the control system and any gas control which has been under water.

LIGHTING INSTRUCTIONS

1. STOP! Read the safety information above on this label.
2. Turn off all electrical power to this appliance.
3. Turn off the gas control knob clockwise ↷ to the off position.
4. Open door. Wait flve (5) minutes to clear out any gas. Close door. If you smell gas STOP! Follow "B" in the above safety information. If you do not smell gas go to the next step.
5. Find pilot-located to the left under the front log. Turn the gas control knob counter-clockwise ↶ to "PILOT". Push the gas control in fully and hold, keep knob depressed for about 30 seconds after the pilot is lit. Release knob. If pilot goes out, repeat steps 4 through 5.

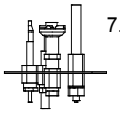

WARNING: this gas valve has a lockout device, which will not allow the pilot burner to be relit until the thermocouple has cooled. If the knob does not pop up when released, stop and immediately call your service technician or gas supplier.
If the pilot does not stay lit after several tries, turn the gas control knob to "OFF" and call your service technician or gas supplier.
6. Turn the gas control knob counter clockwise ↶ to the "ON" position. Flip the burner switch to "ON" THEN TURN THE "HI/LOW" knob to the desired setting.
7. Turn on the electrical power to the unit.

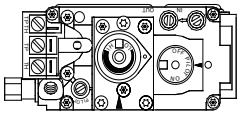

TO TURN OFF GAS TO APPLIANCE

1. Flip burner switch to "OFF"
2. Turn the gas control knob clockwise ↷ to the "OFF" position.
3. Turn off all electrical power to the appliance if service is to be performed.

C-10489

Figure 2. Lighting Instruction Label

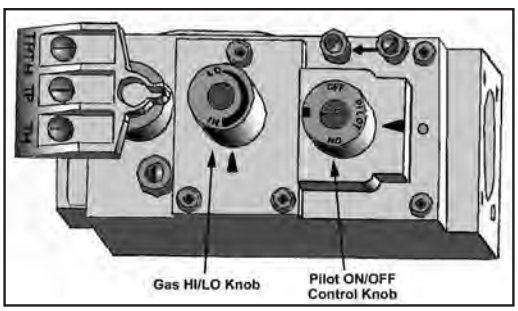

Figure 3: Gas Valve.

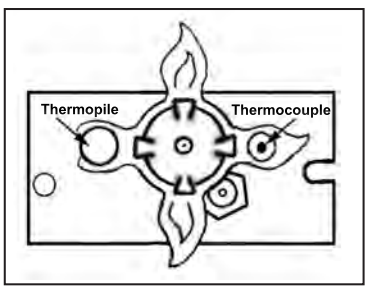

Figure 4: Pilot Burning.

Operating Instructions

Adjusting Venturi Air Settings:

There is only one (1) venturi and one (1) air shutter to be adjusted.

When installing the burner top, ensure that the venturi tube is engaged to the air shutter adjustment rod.

Use this small venturi adjustment rod to achieve a proper and efficient flame, shown in Figure 5.

Adjust rod until the flame pattern is similar to Figure 33.

Table 1: Venturi Setting.

	Natural Gas	Propane
Venturi Setting Rear	1/16" min.	3/16" min.

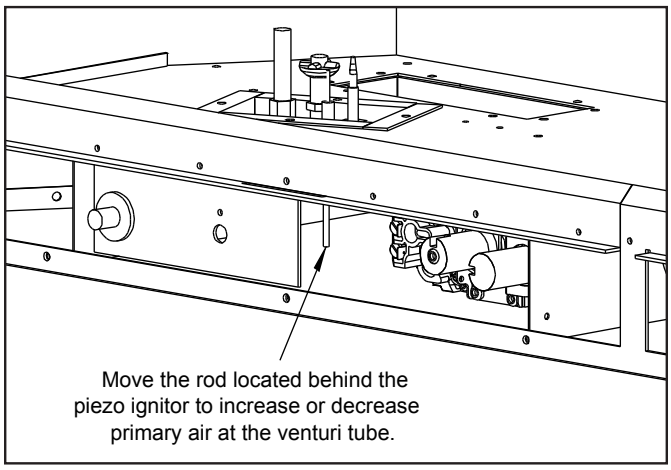

Figure 5: Venturi Air Setting Rod

Blower speed:

The blower will come on only when the fireplace is up to temperature (approximately 20 minutes). The speed of the fan can be changed by turning the fan control knob. To turn the blower off, turn the knob COUNTER CLOCKWISE until it "clicks" off.

It is advisable not to operate the blower below 1/3 speed as it puts a strain on the windings of the blower and running the blower at lower speeds could also cause premature fan failure.

Normal Sounds During Operation:

Table 2: Normal Sounds.

Component	Sound & Reason
Focus & Fascia	Creaking when heating up or cooling down.
Burner	Light pop or poof when turned off; this is more common with LP units.
Temperature Sensor	Clinking when it senses to turn the blower on or off.
Pilot Flame	Quiet whisper while the pilot flame in on.
Blower / Fan	Air movement that increase and decreases with the speed of the blower. The blower is pushing the heat from the fireplace into the room.
Gas Control Valve	Dull click when turning on or off, this is the valve opening and closing.

Maintenance And Service

Routine Maintenance:

At least once a year, run through the following procedures to ensure the system is clean and working properly. Check the burner to see if all the ports are clear and clean. Check the pilot to make sure it is not blocked by anything. The pilot flame should be blue with little or no yellow on the tips.

Warning: Clearances must be sufficient to allow access for maintenance and service

Warning: Failure to position the parts in accordance with this manual, or failure to use only parts specifically approved with this appliance may result in property damage or personal injury.

The venting system must be periodically examined; it is recommended the examination is done by a qualified agency.

Glass Door Removal:

Turn unit off and wait until the appliance has cooled down.

Remove the decorative fascia or clip-on bay window by lifting it up and removing it from the slots in the body of the unit.

Undo the two (2) 5/16" bolts at the top of the door frame and then lift the glass and frame, being careful that the glass does not fall out of the door frame assembly. Install in the reverse order.

Ensure the door is properly fastened after cleaning before attempting to re-light the appliance.

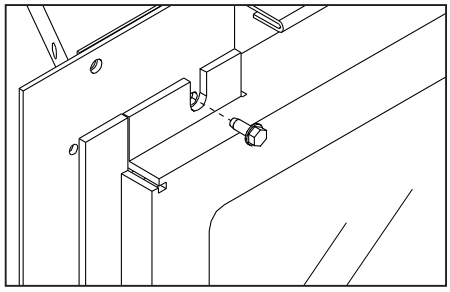

Figure 6: Top bolts for glass door.

Cleaning The Glass:

When the fireplace has cooled, remove the face of the fireplace along with the glass. See Maintenance And Service - Glass Door Removal. Check the gasket material on the back of the glass, making sure that it is attached and intact.

During a cold start up, condensation will sometimes form on the glass. This is a normal condition with all fireplaces. However, this condensation can allow dust and lint to cling to the glass surface. Initial paint curing of the appliance can leave a slight film behind the glass, a temporary problem. The glass will need cleaning about two weeks after installation. **Use a mild glass cleaner and a soft cloth**; **abrasive cleaners will damage the glass and plated surfaces.** Depending on the amount of use, the glass should require cleaning no more than two or three times a season. **Do not clean the glass when it is hot.**

Cleaning The Firebox:

Remove the logs carefully, as they are very fragile. Gently remove all the embers and rock wool and place on a paper towel. Vacuum the bottom of the firebox thoroughly. Carefully clean any dust off the logs and remove any lint from the burner and pilot. At this time, inspect the burner pan for cracking or severe warping. If a problem is suspected, contact the dealer. Check the logs for deterioration or large amounts of soot; a small amount on the bottom side of the logs is normal. Replace the logs and embers as in the Secondary Installation - Log Set and Ember Installation section. If new/more embers and rock wool are required, contact your nearest ENVIRO dealer.

Replacing the Glass:

The glass in the fireplace is a high temperature ceramic. If the glass is damaged in any way, a factory replacement is required (see Parts List). Wear gloves when handling damaged glass door assembly

to prevent personal injury. When the glass door assembly is being transported, it must be wrapped in newsprint and tape and/or a strong plastic bag. Do not operate with the glass front removed, cracked or broken. Removal and replacement of the glass from the door **must** be done by a licensed or qualified service person. **The glass must be purchased from an ENVIRO dealer. No substitute materials are allowed.**

Maintaining Fascia And Surround Finishes:

When a plated surround or face is received, it should be unpacked/unwrapped carefully to avoid getting anything on the surface of the finish, including cleaners, polish and finger prints. If your fingers come into contact with the finishes, the oils left as fingerprints on the plating can become permanently etched in the surface. To prevent this, clean the painted surfaced with a damp cloth and clean plated finishes with denatured alcohol after the installation and prior to first firing of the fireplace. If your fingers come into contact with the antique copper finish, the oils left as fingerprints on the copper can cause discoloration, which will eventually turn green in that area. You can clean the patina or discolored areas of the antique copper finish with "OO" 3M green sanding pads. These can be purchased from most hardware stores. On the areas with discoloration, use the sanding pads to sand in the same direction as the brushed finish, then blend the finish by feathering in the surrounding area. This refinishing procedure has been approved by the manufacturer and will not harm the finish. Please note: ANTIQUE COPPER IS THE ONLY FINISH THAT CAN BE SANDED, DO NOT SAND PEWTER, GOLD OR NICKEL FINISHES.

Burner and Blower Removal:

1. Turn the unit off, remove the glass door (see Maintenance And Service - Glass Door Removal) and the log set. **Caution: Bleed lines before lighting and light pilot with door open.**
2. Remove the burner tray top by removing the two (2) T-20 screws located in the center of the burner tray (see Figure 7). Slide tray to the left and lift out.
3. Remove brick panels (see Secondary Installation - Brick Panels Installation).
4. Remove the surround panel by lifting it straight up and then out to free it from the body of the unit.
5. Turn the gas supply off and remove gas connection and disconnect the wiring from the side of the appliance.
6. Remove the three (3) T-20 screws that hold the air deflector in place on the back firewall (see Figure 7) and undo the remaining screws that hold the burner assembly in the appliance. Carefully remove the gas tray assembly from the firebox, ensuring that wires and gas lines are not damaged.
7. Remove the blower and housing from the gas tray assembly by removing the fastening screws located on the back of the gas tray assembly. Disconnect the wiring from the fan temperature sensor and remove.

To install; follow steps 1 through 7 in reverse. Perform a gas leak check on all gas line with a soap and water solution or an approved method and check burner and blower assembly for proper operation.

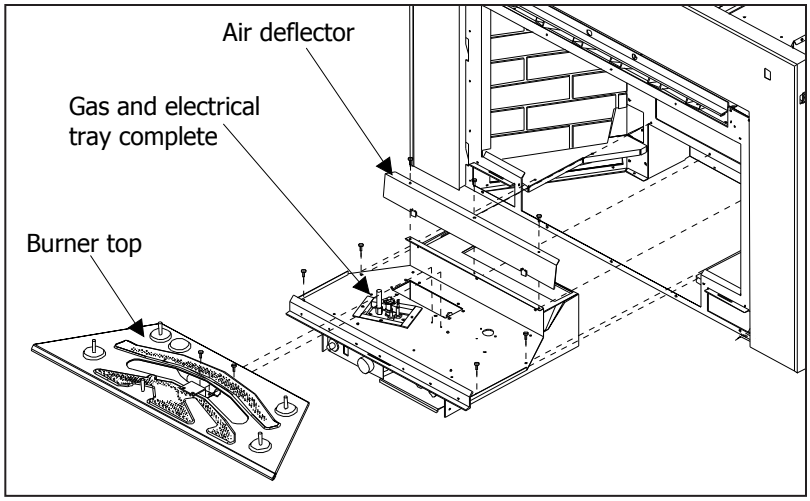

Figure 7: Removing Burner and Gas Tray.

Maintenance And Service

Fuel Conversion:

TO BE INSTALLED BY A QUALIFIED SERVICE AGENCY ONLY

Please read and understand these instructions before installing.

Warning: This conversion kit shall be installed by a qualified service agency in accordance with the manufacturer's instructions and all applicable codes and requirements of the authority having jurisdiction. If the information in these instructions is not followed exactly, a fire, explosion or production of carbon monoxide may result causing property damage, personal injury or loss of life. The qualified service agency is responsible for the proper installation of this kit. The installation is not proper or complete until the operation of the converted appliance is checked as specified in the manufacturer's instructions supplied with the kit.

Kit Parts List:

1 - Orifice (NG #38 DMS or LP #52 DMS)

1 - Pilot Injector (NG 0.62 mm; LP 0.35 mm)

1 - Installation instruction sheet

1 - Conversion label

Carefully inspect all parts supplied with this conversion kit. If any parts have been damaged or are missing, contact your dealer, distributor or courier company to have them replaced before starting this installation.

Conversion Kit Installation:

1. Turn control knob on the gas valve to the "OFF" position and shut the gas supply off at the shut-off valve upstream of the unit. CAUTION: The gas supply must be shut off prior to disconnecting the electrical power and before proceeding with the conversion. Allow the valve and unit to cool down to room temperature.
2. Remove the glass as shown in the Maintenance and Service - Opening The Door.
3. Carefully remove the log set and ember material if they are installed.
4. Remove the burner as shown in the Maintenance and Service - Burner Removal.
5. Convert the burner orifice(s):
   a) Remove the main burner orifice with a ½ inch deep socket.
   b) Put a bead of pipe-thread sealant or approved Teflon tape on the orifice threads before installing into the brass elbow.
   c) Install the new orifice(s) from the kit into the brass elbow.
6. Convert the pilot injector:
   a) Pull the pilot hood straight up to access the pilot injector.
   b) Using a $^{5}/_{32}$" or 4 mm Allen key, remove the pilot injector.
   c) Install the new pilot injector supplied with this conversion kit. Simply screw the new injector inside the pilot hood using the Allen key,
   d) Reinstall the hood by placing the hood on the assembly, line up the key way, and snap into place.

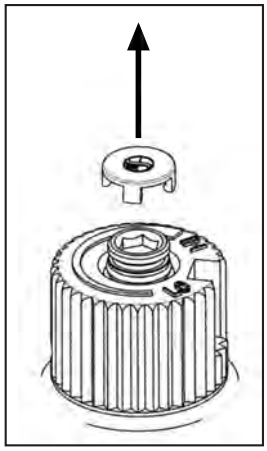

Figure 8: Removing valve cap.

7. Convert the SIT gas valve:
   a) Remove the black protection cap from the HI/LO knob by hand shown in Figure 8.

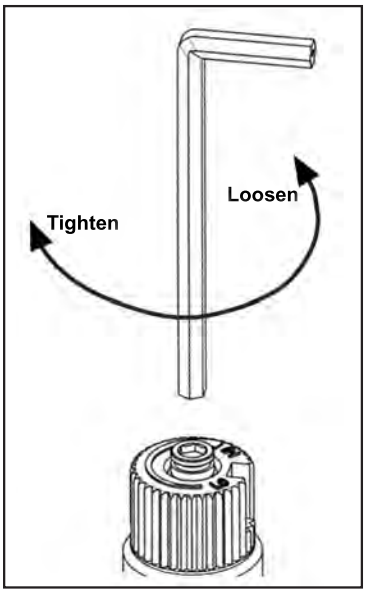

Figure 9: Removing valve screw.

   b) Insert a $^{5}/_{32}$" or 4 mm Allen wrench into the hexagonal key-way of the screw (see Figure 9), rotate it counter-clockwise until it is free and extract it.
   c) Check that the screw is clean and if necessary remove dirt.
   d) Flip the screw (refer to Figure 10).
   e) Using the Allen wrench as shown in Figure 9, rotate the screw clockwise until a torque of 9 inch lbs. **WARNING!** Do not over tighten the screw. It is recommended that you grip the wrench by the short side.
   f) Verify that if the conversion is from NG to LPG, the screw must be re-assembled with the red o-ring visible (refer to Figure 11). If the conversion is from LPG to NG, the red o-ring of the screw must be not visible.

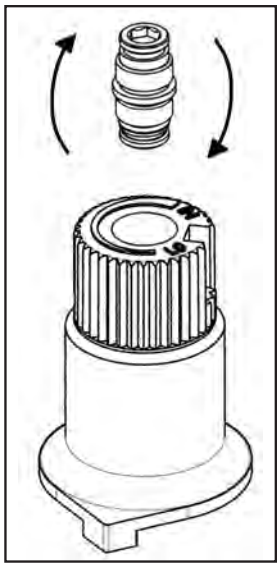

Figure 10: Flip valve screw.

   g) Re-attach the black protection cap that was removed in step a (Figure 8).

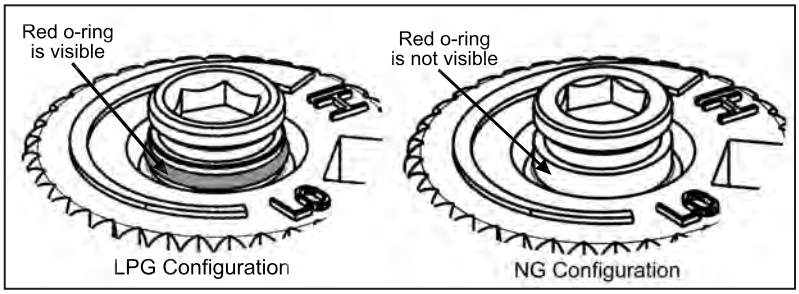

Figure 11: O-ring on valve screw.

8. Reinstall the burner, brick panels, log set, embers, and glass door. Also refer to SECONDARY INSTALLATION - INSTALLING LOG SET AND EMBERS. When re-installing the burner, ensure that the burner to pilot hood relationship is similar to what is shown in Figure 12. On some units you will need to pay special attention when installing the burner that the venturi adjustment rod is properly installed into the venturi adjustment piece welded to the burner venturi tube

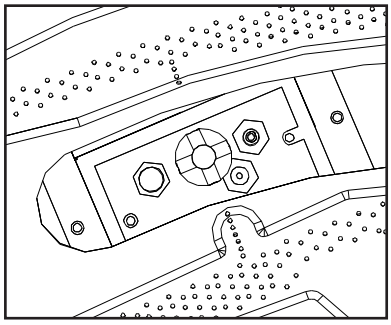

Figure 12: Burner to pilot hood relationship.

9. Reconnect the main gas line if it was disconnected and open the shut-off valve at the gas line to the unit.
10. Use a small brush to apply a warm soapy water solution to all gas connections (use a half dish soap and half warm water). If a gas leak is present, bubbling will occur. Gas leaks can be repaired by using an approved pipe thread sealant or approved Teflon tape. NEVER USE AN OPEN FLAME WHEN TESTING FOR LEAKS.
11. Reconnect the electrical power to the unit.
12. Relight the main burner in both the "HI" and "LO" positions to verify proper burner ignition and operation and proper flame appearance. Also refer to SECONDARY INSTALLATION - LOG SET AND EMBERS INSTALLATION for a flame appearance picture.
13. MAKE SURE that the conversion label is installed on or close to the rating label to signify that the unit has been converted to a different fuel type.

Initial Installation

WARNING: Operation of this heater when not connected to a properly installed and maintained venting system can result in carbon monoxide (CO) poisoning and possible death.

Warning: Failure to position the parts in accordance with this manual, or failure to use only parts specifically approved with this appliance may result in property damage or personal injury.

Clearances to Combustibles:

Mantle pillar to glass door	9" (22.8 cm)
From floor to 8" wide mantle	38" (96.5 cm)
Minimum non-combustible surface in front of unit	11" (27.9 cm)

Warning: Clearances must be sufficient to allow access for operation, maintenance and service. Stove must sit on a non-combustible surface.

Depth of unit into fireplace 16" (41 cm)
Depth of unit out of fireplace 3" (7.6 cm)

Minimum fireplace size: Width 34" (86.36 cm)
Height 21" (53.3 cm)
Depth 18" (45.7 cm)

B Vent Model:

WARNING: This appliance has been designed to operate by drawing combustion air and dilution air from the room. It is also designed to draw room air for proper heat circulation from the sides of the unit. Blocking or modifying the louvers in any way can create hazardous situations, either through poor venting or by overheating. It is important that this unit has sufficient air circulation for proper venting and combustion. Provisions must be made for the supply of adequate combustion and ventilation air. These openings must not be blocked. The appliance must not be connected to a chimney flue servicing a separate solid fuel burning appliance.

Automatic Flue Gas Spill Switch:

NOTE: This heater must be properly connected to a venting system. This heater is equipped with a vent safety shutoff system designed to protect against improper venting of combustion products. This safety switch is located on the rear of the appliance close to the draft hood relief opening. If the switch trips more than once, the venting should be inspected by a qualified service technician for possible blockage or severe down draft conditions.

BV Only: The draft hood must be in the same pressure zone as the air inlet. To inspect draft from the front of the unit, locate the ¼" tube between the louvers (see Figure 13) and check for a draft using smoke. A vacuum or suction into the tube will indicate proper drafting.

This model can be vented with 4" aluminum or stainless steel flex vent and/or certified Type B Gas Vent. The flue collar of the appliance will fit inside of a standard 4" vent and may be fastened directly to the vent, check periodically that the vent is unrestricted and an adequate draft is present when the unit is in operation.

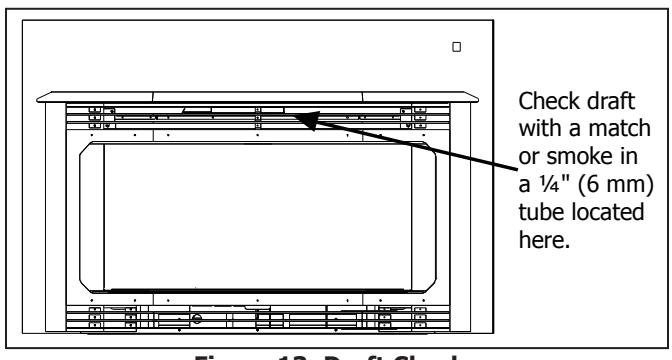

Figure 13: Draft Check.

Initial Installation

QUALIFIED INSTALLERS ONLY

Direct Vent Model:

WARNING: This appliance has been designed to draw room air for proper heat circulation from the sides of the unit. Blocking or modifying the louvers in any way can create hazardous situations.

This model is vented with TWO (2) 3" aluminum or stainless steel flex vent leading into a co-linear to co-axial vent adaptor and using a Simpson Dura Vent vertical termination cap. The flue collars of this model will fit inside of standard 3" vent and may be fastened directly to the vent. The Exhaust vent is in the center of the flue connector. The Air Intake is on the left side of the vent collar plate (this outlet is not in the center it is off to one side of the vent collar plate.)

Check periodically that the vents are unrestricted. Also ensure that all direct vent pipes have been properly sealed and installed after routine inspection or cleaning. The air intake and exhaust pipes must be installed in the correct locations on the removable draft hood connector.

Direct Vent Restrictor Ring:

DIRECT VENT ONLY: The maximum vertical vent height for a direct vent installation is 25 feet (7.62 m). Use the vent restrictor ring for installations above 15 feet (4.57 m). See Figure 14 for installation of restrictor ring.

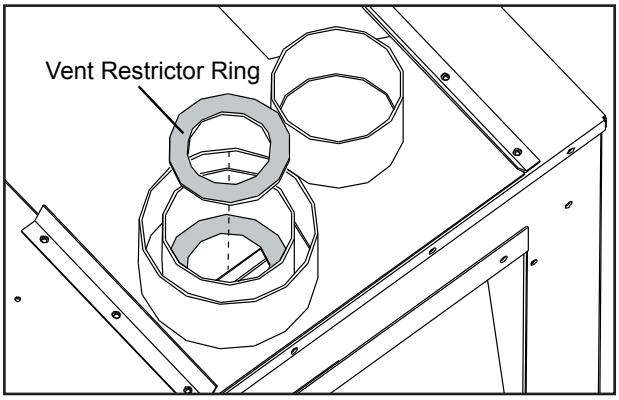

Figure 14: Direct vent restrictor ring installation.

Preparing Your Focus For Installation:

1. Remove the appliance and surround panels from the packaging; check to make sure there is no damage. Carefully check the glass door. Do not use the unit if it is damaged. In the event damage is found, please report it to both the courier and your dealer as soon as possible.
2. Carefully clean the fireplace and flue before installing the stove. Failure to do so may result in fumes or dirt being blown into the room and may cause a fire leading to death or serious injury.
3. Remove the glass door; see Maintenance And Service - Glass Door Removal.
4. Remove log and ember set and all wrapping material from inside the stove. Remove wrapping material from log and embers and check for any damage. If damage is observed, do not use unit and contact your local dealer.
5. Remove the vent collar plate from the top of the stove by unscrewing the two (2) T-20 Torx screws located on the center top of the stove. Slide collar plate backwards. Properly secure the vent collar plate to the flexible vent pipe liner(s) previously installed in the chimney. Be careful not to over-stretch the liner(s).
6. Install the leveling legs. Thread the two (2) 5" (13 cm) bolts and locknut up into the captive nuts at each end of the leveling leg bracket (refer to Figure 15).

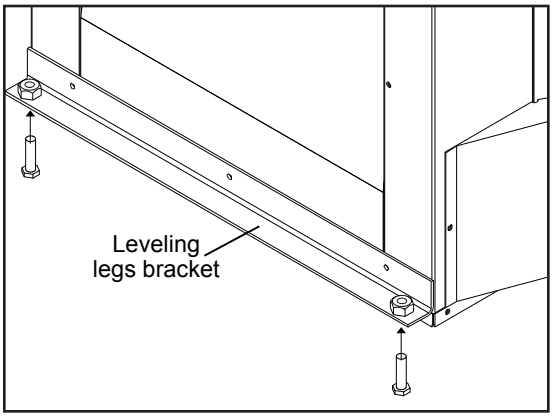

Figure 15: Installation of Leveling Legs.

7. Place the unit part way into the fireplace. Connect the fireplace insert's flexible gas line to the household gas supply, using locally approved methods. Place the electric cable so it can be connected to the power supply.
8. As you push the unit into its final position in the fireplace, reinstall the vent collar plate to the stove by sliding it along the draft hood and secure with the screw. Adjust the leveling legs to ensure the unit is level.
9. If a trim set has been purchased for your surround panel, it must be installed before installing the surround panel onto the unit.
   a) Attach one side trim to the top trim using a corner bracket (see Figure 16) to secure pieces together. There are two (2) main pieces to each corner bracket (see Figure 17). When installing the corner pieces into the trim the "B FACE" sides must face each other and the screw heads are to face out. With the bracket in place and the top and a side trim snug together use a flat head screwdriver to turn the two (2) screws in the bracket in to tighten it into the trim.

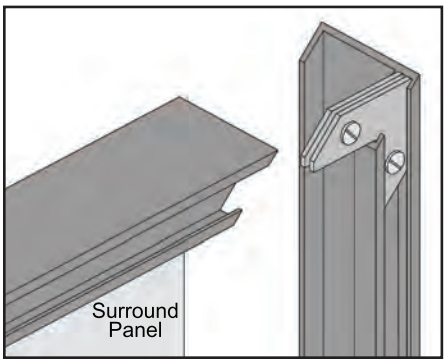

Figure 16: Corner brackets for trim.

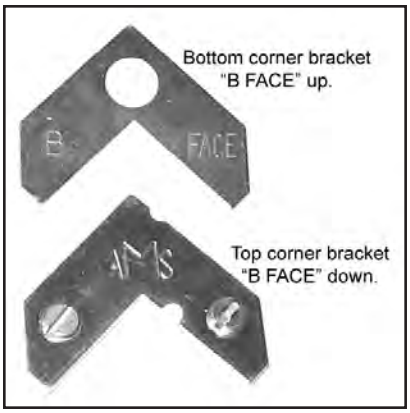

Figure 17: Two pieces of corner bracket.

   b) Slide the two (2) attached trim pieces onto the surround panel.
   c) Attach the other side trim piece to the top trim using the same method used in Step a.
   d) Place the second side of the trim on the surround panel in the same manner use on the first side and secure in the same manner.
   e) On the side trims there are holes 2" (50 mm) from either end. Using a Phillips screwdriver to place a #8 screw 1¼" long in each hole and tighten (refer to Figure 18). This will keep the trim tight against the surround.

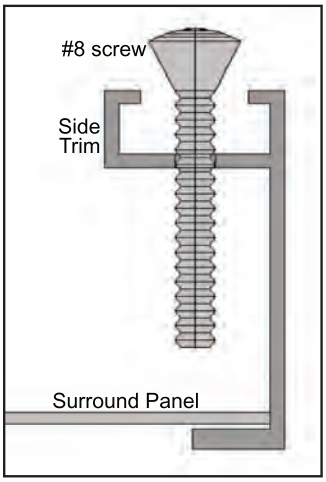

Figure 18: Screw to hold the trim against the surround.

NOTE: The notch at the bottom of the left trim is so the power cord can be run to the outside of the panel.

10. Connect the wires from the unit to the ON/OFF/THERMOSTAT switch and the FAN CONTROLLER (see Initial Installation - Fan Controller & Burner Switch Installation and Initial Installation - Electrical Requirements).

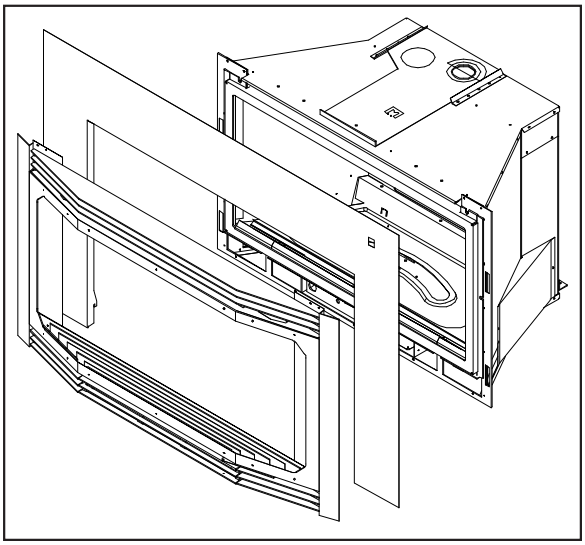

Figure 19: Surround Panel installation.

QUALIFIED INSTALLERS ONLY

11. Place the assembled surround panel around the stove, align the slots. Push back then down to engage the surround panel hooks with the slots in the fireplace. Install the decorative fascia or bay window options to the appliance by aligning the hooks and the slots in the fireplace as seen in the surround panel installation.

Fan Controller & Burner Switch Installation:

The wiring from the power cord to the fan and components should be checked, and corrected if necessary (refer to Figure 25). The fan controller and burner switch may be installed in one of three places. Keep the wires away from the bottom of the firebox or any other hot surfaces.

Option 1 - Unit Panel, Cast Iron Faceplate, Bay Door Assembly, or Custom Surround Panel.

The fan controller and burner switch are to be installed into the Focus' control panel (see Figure 20). Remove the knob and screw from the fan controller and place the fan controller through the round hole in the control panel from the back. Tighten nut onto fan controller from the front of control panel and push on the knob. The burner switch is just pushed into place from the front of the control panel. Route the wiring harness as shown in Figure 20.

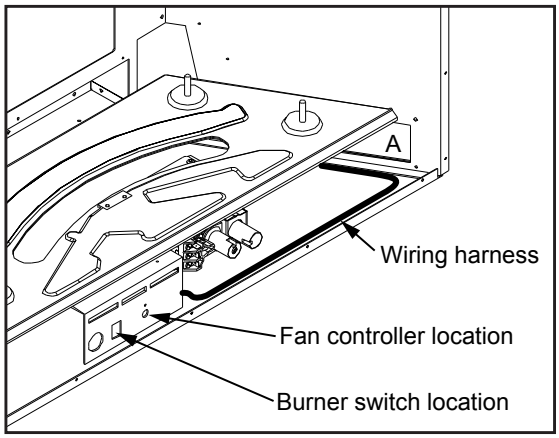

Figure 20: Component placement.

Option 2 - Standard Surround Panel.

The standard surround panel comes with the Fan Controller pre-mounted in the surround panel, and the burner switch is pressed into a hole in the side top of the trim, therefore, the set that comes with the unit panel (if used) can be kept as spare parts. On the right side trim there may be three (3) holes with a Phillips screw and wire tie installed at each hole (refer to Figure 21). If not, wire ties and an extra screw are supplied with the unit. These screws will keep the trim tight against the surround. Route the wiring harness through the hole in the lower right side of the unit marked with an 'A' in Figure 20. Connect the wires from the unit to the ON/OFF/THERMOSTAT switch and the FAN CONTROLLER on the surround panel (see Figure 25). Wrap the three (3) Wire Ties around the wiring harness to ensure the wires stays close to the trim (see Figure 21).

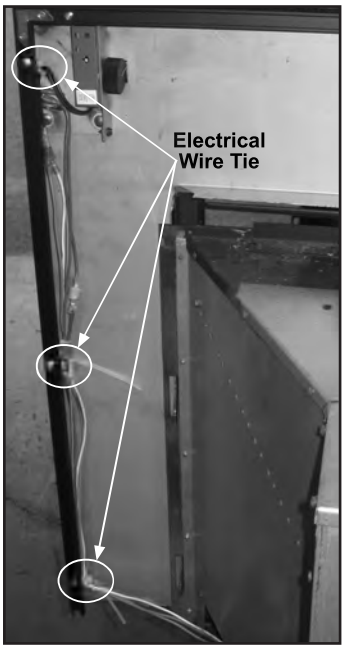

Figure 21: Wire ties holding wires against the trim.

IMPORTANT: When replacing the Rheostat (FAN CONTROLLER) or Rocker Switch (ON/OFF/THERMOSTAT switch), ensure that the wires are captured behind the surround trim with the Wire Ties.

Option 3 - Cast Iron Faceplate or Bay Door Assembly.

The fan controller is to be installed into the Focus' control panel but the burner switch can be installed into the fascia (see Figure 20). To accomplish this, cut one wire tie so that the wires can be properly routed. Place the orange and white wires through through the hole in the side of the unit, marked with an "A" in Figure 20, then along behind the front edge of the fireplace bottom to the control panel. Use the wire ties provide to bundle and secure wire. Remove the knob and screw from the fan controller and place the fan controller through the round hole in the control panel from the back. Tighten nut onto fan controller from the front of control panel and push on the knob. The burner switch is pressed into a notch on the edge of the fascia.

Initial Installation

QUALIFIED INSTALLERS ONLY

Converting A Direct Vent Fireplace To A B-Vented Fireplace:

Parts required for conversion

1 - 300°F (149°C) manual reset spill switch and wires
1 - Drafthood (4" chimney connection)
2 - Air channels
1 - Drafthood diverter

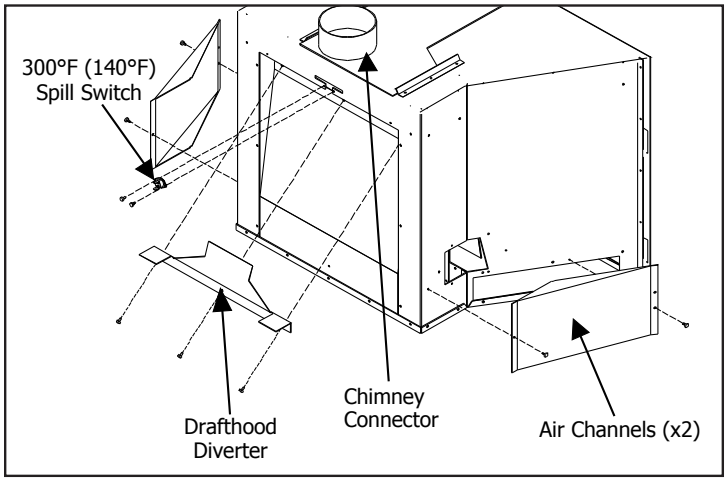

Figure 22: Converting To A BV Fireplace.

1. Remove the chimney connector, fresh air cover plates and draft hood cover plate.
2. Install the 300°F (149°C) spill switch in the location provided.
3. Install the two fresh air channels in the correct locations.
4. Install a new 4" chimney liner into the existing and attach with three (3) sheet metal screws evenly spaced to new 4" chimney connector.
5. Test fire the appliance and ensure proper operation. A venturi adjustment could be required to achieve an efficient flame. Improper operation or adjustment could result in Carbon Monoxide production causing personal injury or property damage.

Converting A B-Vent Fireplace To A Direct Vented Fireplace:

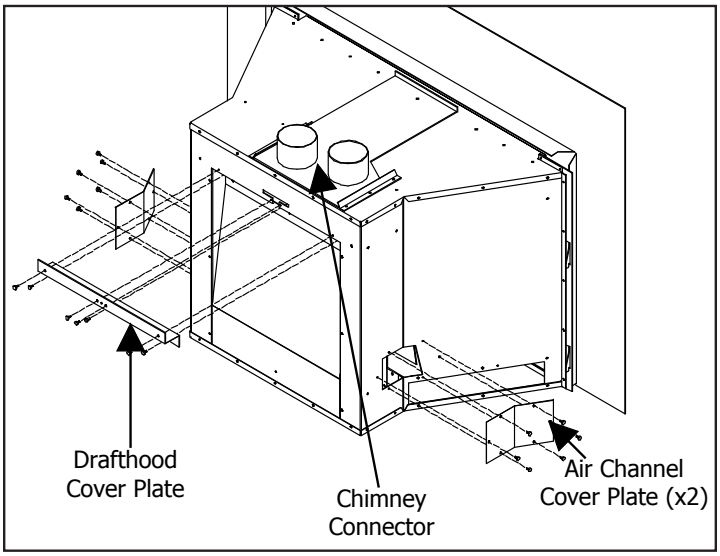

Figure 23: Converting To A DV Fireplace.

Parts required for conversion

1 - Drafthood (2 - 3" dual pipe chimney connector)
2 - Air channel cover plates
1 - Drafthood cover plate.

1. Remove the chimney connector, 300° spill switch, two (2) B-vent air channels and B-vent draft diverter plate.
2. Install the two (2) air channel cover plates in the locations provided.
3. Install the draft hood cover plate in the location provided.
4. Install two (2) 3" chimney liners in the existing chimney, securing the 3" liners with three (3) sheet metal screws evenly spaced to the new chimney connector.
5. Test fire the appliance and ensure proper operation. A venturi adjustment could be required to achieve an efficient flame. Improper operation or adjustment could result in Carbon Monoxide production causing personal or property damage.

Initial Installation

QUALIFIED INSTALLERS ONLY

Venting Fireplace Inserts:

The **ENVIRO** FOCUS may be installed and vented into any solid fuel fireplace that has been installed in accordance with the National, Provincial/State and local building codes and has been constructed of non-combustible materials.

An approved chimney liner and rain cap must be used. A throat connector or flashing **must** be installed to ensure a tight seal, top performance, safety and efficiency. Carefully follow the manufacturer's instructions which accompany the chimney liner kit.

Remove the vent collar plate from the top of the insert and connect it securely with sheet metal screws and/or hose clamps. Check for any tears in the liner at this point.

IMPORTANT: The screws that hold the vent collar plate in its approved position must be installed.

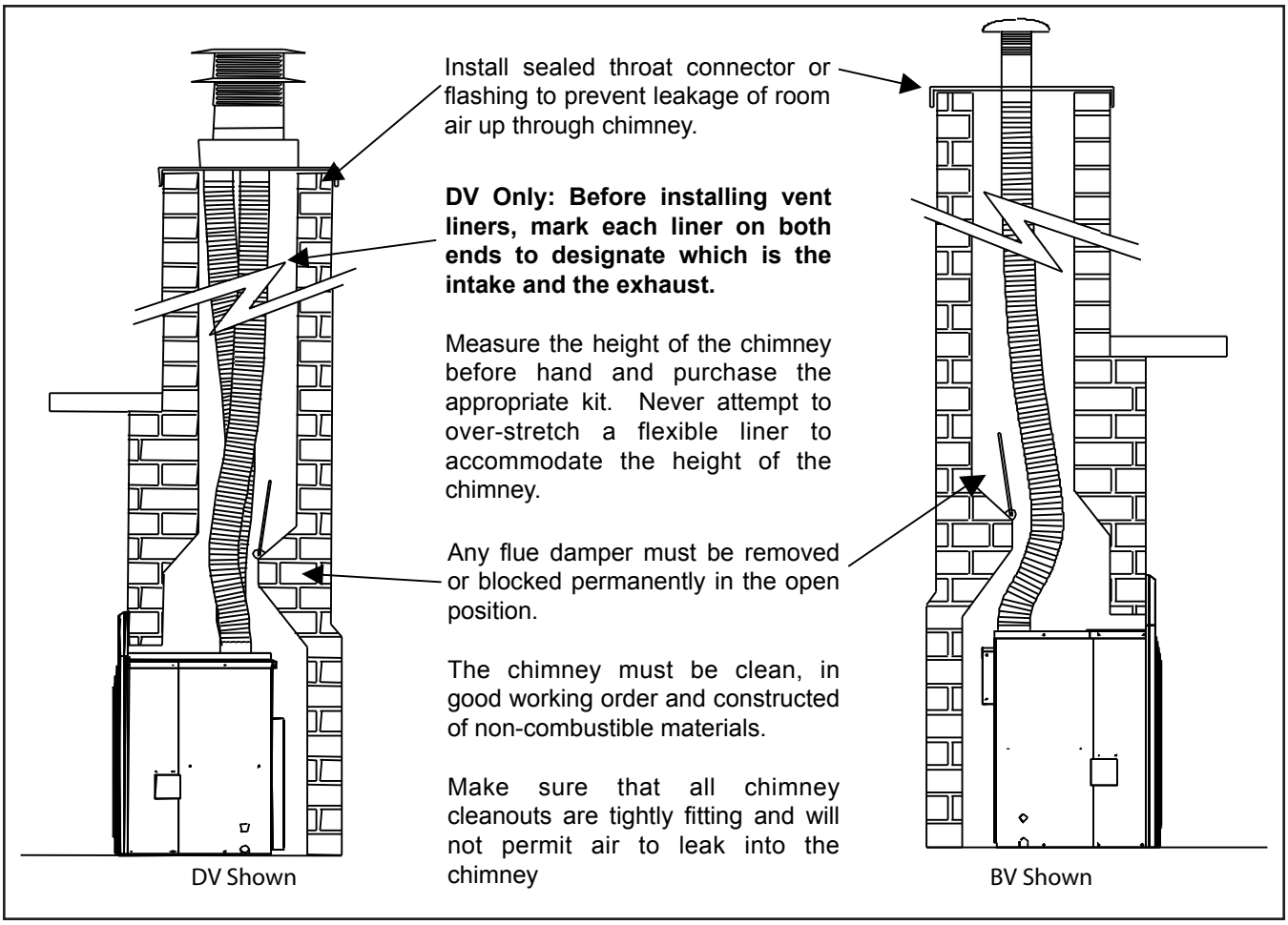

Figure 24: Installation of Focus DV and BV.

Initial Installation

QUALIFIED INSTALLERS ONLY

Electrical Requirements:

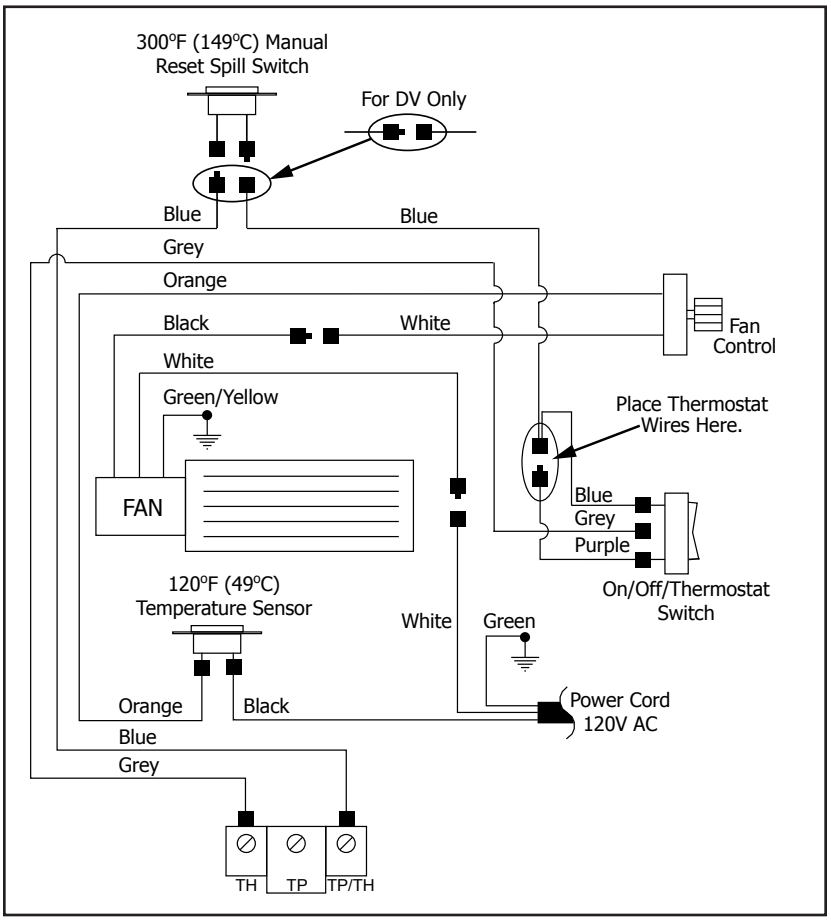

Figure 25: Focus Wiring Diagram.

The **Focus** will operate without electrical power. This model has a Millivolt gas control which uses the pilot flame to generate enough electricity to operate the main burners. This appliance when equipped with a blower, must be electrically connected and grounded in accordance with local codes or in the absence of local codes, with the current CSA C22.1 CANADIAN ELECTRICAL CODE Part 1, SAFETY STANDARDS FOR ELECTRICAL INSTALLATIONS, OR THE NATIONAL ELECTRICAL CODE ANSI / NFPA 70 in the U.S.

WARNING: Electrical grounding instructions. This appliance is equipped with a three-prong (grounding) plug for your protection against shock hazard, and should be plugged directly into a properly grounded three-prong outlet. DO NOT cut or remove the grounding prong from this plug.

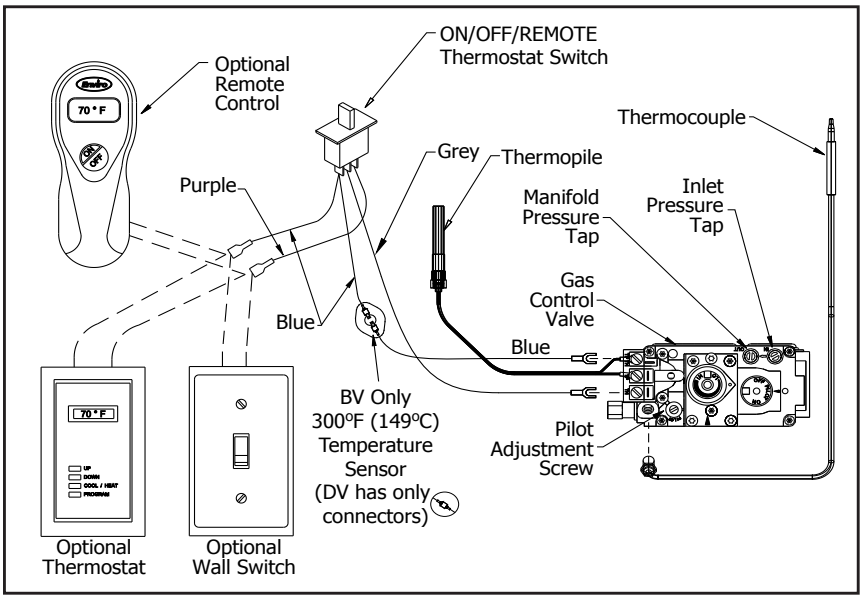

Figure 26: Wiring of a Thermostat.

CAUTION: Label all wires prior to disconnection when servicing controls. Wiring errors can cause improper and dangerous operation. Verify proper operation after servicing.

Table 3. Recommended Thermostat Wire Size.

Wire Size	Max. Length
14 gauge	100 ft (30.48 m)
16 gauge	60 ft (18.29 m)
18 gauge	40 ft (12.00 m)
20 gauge	25 ft (7.62 m)
22 gauge	18 ft (5.49 m)

Initial Installation

QUALIFIED INSTALLERS ONLY

Gas Line Connection:

Warning: Only persons licensed to work with gas piping may make the necessary gas connections to this appliance.

Gas Line Connection:

•This fireplace is equipped with a certified flexible pipe located on the right side of the unit, terminating in a ⅜" male NPT fitting. Consult the local authorities for local codes or use the CAN/CGA B149 (1 or 2) installation code in Canada. In the US, gas installations follow either local codes or the current edition of the National Fuel Gas Code ANSI Z223.1.

•The efficiency of this unit is a product thermal efficiency rating determined under continuous operating conditions and was determined independently of any installed system.

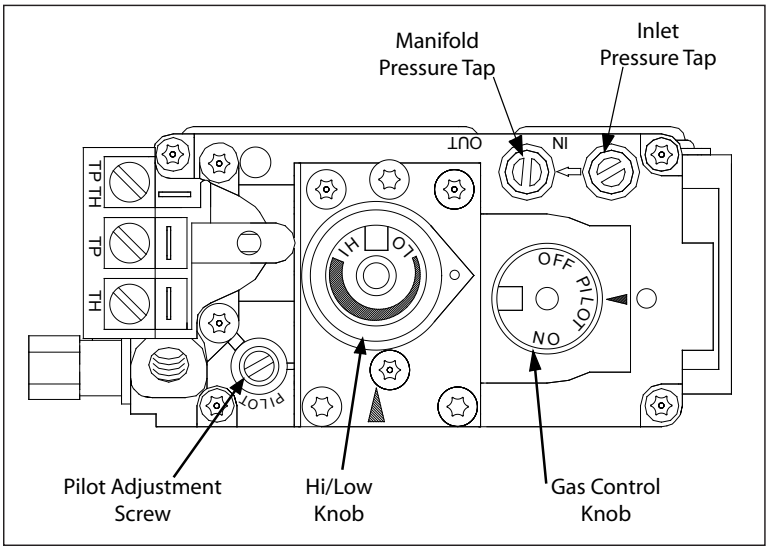

Figure 27: Fully Labeled Gas Valve.

The appliance and its' shut-off valves must be disconnected from the gas supply piping system during any pressure testing where the pressure **exceeds** ½ psig (3.45 KPa) or the valve will be damaged.

The unit must be isolated from the gas supply piping system by closing its' individual manual shut off valve during any pressure testing of the gas supply piping system at pressures **equal to or less than** ½ psig (3.45 KPa).

Always check for gas leaks with a soap and water solution after completing the required pressure test.

TO TEST VALVE PRESSURES:

The pressure taps are located on the top right of the valve.

- Turn set screw 1 turn counterclockwise to loosen.
- Place 5/16 in (8 mm) I.D. hose over the pressure taps.
- Check pressures using a manometer.
- When finished, release pressure, remove hose and tighten set screw.

Table 4: Pressure and BTU Information.

Main Burner	Natural Gas (in W.C./KPa)	Propane Gas (in W.C./KPa)
Orifice:	#38 DMS	#52 DMS
Manifold Press:	3.8 / 0.95	11.0 / 2.74
Min. Manifold Press:	1.1 / 0.27	2.7 / 0.67
Max. Supply Press:	7.0 / 1.74	13.0 / 3.28
Min. Supply Press:	5.0 / 1.24	12.0 / 2.98
Max. BTU Input:	30,000/ 8.8 KW·h	28,500/ 8.2 KW·h
Min. BTU Input:	15,000/ 4.4 KW·h	14,000/ 4.1 KW·h

NEVER USE AN OPEN FLAME FOR LEAK TESTING.

Secondary Installation

Log Set and Ember Installation:

The placement of the logs is not arbitrary. If they are positioned incorrectly, the flames can be "pinched" and will not burn correctly. The burner comes with placement pins and rest areas, which make alignment easier. Using Figures 28 to 32, carefully set the logs in place.

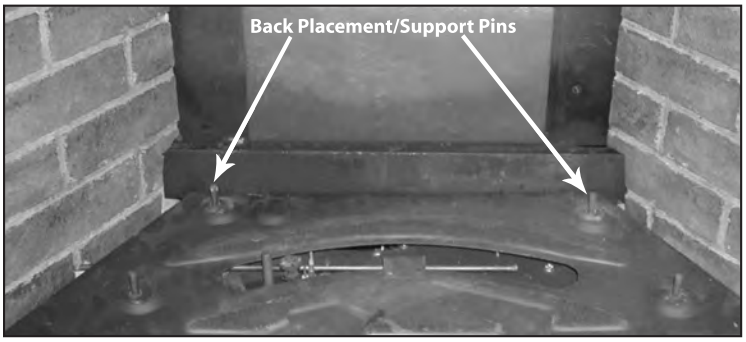

Figure 28: Focus burner.

NOTE: The logs are fragile and should be handled with care.

Place the rear log on the two back placement pins.

Install the left front log on the left placement pin with the narrow end of the log resting on the rectangular rest area.

Install the right front log on the right placement pin with the narrow end of the log resting on the rectangular rest area. The last two logs should meet tip to tip on the rest area.

One end of the big log twig will rest on the pin on the right log and the other will lay within the left rest area.

The small log twig should be placed so it sit completely within the right rest area.

Once the logs are in place the embers can be placed lightly between the logs. Bags of ceramic fiber embers and rock wool are provided. The ceramic fiber comes in chunks that are about 2"-4" (5-10cm) long. Break these roughly in half and place them irregularly around the burner. When there is a sparse but even layer of embers, spread the rock wool in the same manner. DO NOT pack this ember material as this could create an unsafe condition. The pieces should be lightly place so they don't completely block any of the tiny ports. DO NOT allow any of the embers to rest against the pilot assembly.

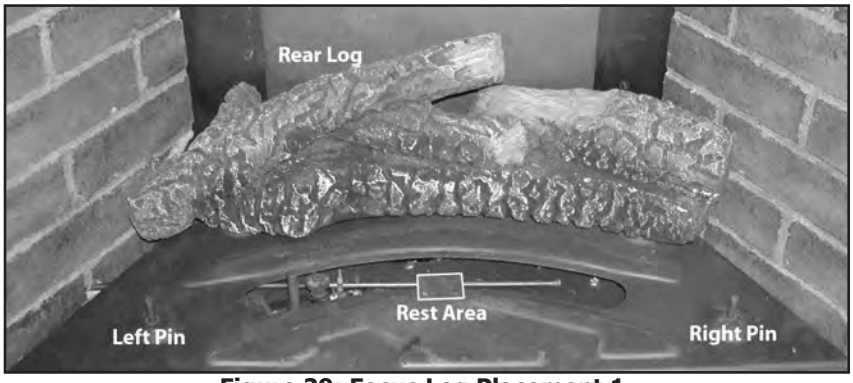

Figure 29: Focus Log Placement 1.

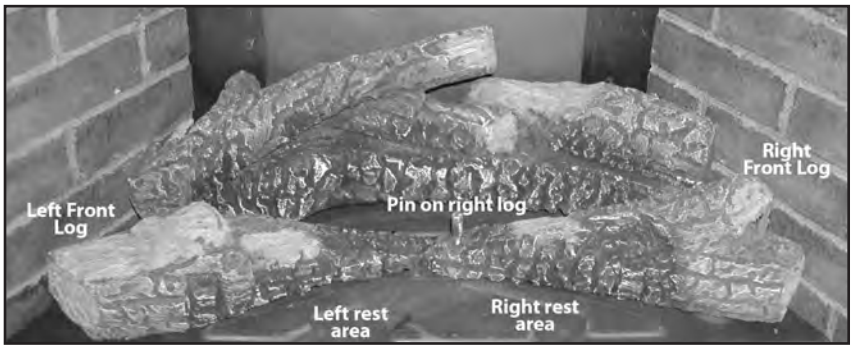

Figure 30: Focus Log Placement 2.

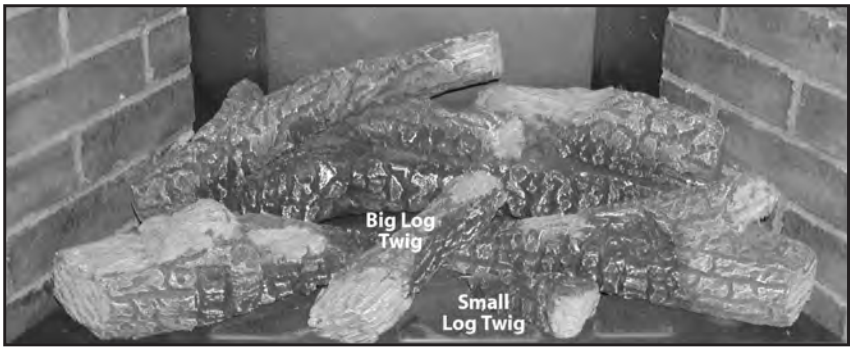

Figure 31: Focus Log Placement 3.

Secondary Installation

Caution: Use only the type of ember material supplied with this fireplace. Due to the irregular size of the ember material, there may be more than required. Use of other foreign materials on the burners may create dangerous conditions.

If over time, through cleaning and servicing, these embers require replacement , contact your nearest Enviro dealer.



Figure 32: Focus Log Placement Complete.

IMPORTANT: Upon the first light up after installing logs and embers, watch for ignition to ALL burner ports. If a long delay is noted wait for the appliance to cool down:

- Open the front door of the appliance
- Carefully reposition the embers, making sure that the burner ports are not plugged or blocked.



Figure 33: Focus Log Set Burning.

Brick Panel Installation:

Remove the glass door and the log set. Remove the burner tray by undoing the hold-down screws located in the center of the pan burner and sliding the assembly to the left, then up.

Gently pull right brick side panel inward from the bottom back. Pull towards the back then out, freeing it from the front retainer.

Caution: The pilot may damage panel. Remove left side panel in the same fashion.

To install, insert front edge of brick panel into the retainer and very gently move panel forward and out until flush against firebox side.

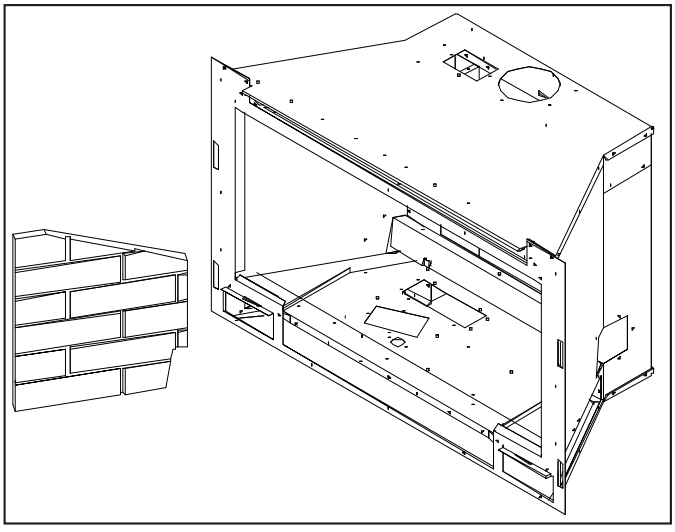

Figure 34: Brick Panel Installation.

Trouble Shooting

Problem	Possible Cause	Solution
The main burner does not ignite when called for.	The gas valve may not be on.	• Check that the gas control knob is in the "ON" position.
	Thermostat is not calling for heat.	• Adjust the thermostat several degrees above ambient temperature.
	Problem with gas valve.	• Use a DC voltmeter to measure the voltage across the TPTH and TP terminals. Main operator voltage: Open circuit ≥ 325mV Closed circuit ≥ 100mV • If voltage is not present, check the control circuit for proper operation. • If proper control system voltage is present, replace the gas control.
Spark will not light the pilot after repeatedly pressing the spark ignitor.	Defective piezo ignitor.	• Check connections to ignitor. • If ignitor connections are good but no spark, replace ignitor.
	Broken spark electrode.	• Check for broken ceramic insulation, replace electrode if broken.
	Misaligned spark electrode.	• If spark is not arcing from electrode to pilot, loosen the screws on the pilot base adjust and tighten.
Pilot will not remain lit.	Problem with thermocouple circuit.	• Check for proper connection of the thermocouple to the rear of the valve. If loose, fully tighten. • Check pilot for full flame impingement around thermocouple. If flame is too small, check gas pressure, adjust pilot rate screw, check pilot head for damage. • Check thermocouple voltage at valve. It must be greater than 5 mV. If low, replace thermocouple.
	Air in gas line (pilot dies while knob is depressed).	• Bleed line. • Check gas line pressure. • Contact dealer.
Burners will not remain lit.	Problem with thermopile circuit.	• Check gas line pressure . • Check for flame impingement on thermopile. If low, see "Pilot will not remain lit". • Check thermopile for minimum of 300 mV when burner is switched on. • Check wiring to thermostat for breaks. **BV ONLY:** Check for spillage at draft hood that may trip spill switch
Flame lifting	Leak in vent pipe	• Check for leaks in vent connections.
	Improper vent configuration	• Check vent configuration with manual.
	Terminal may be recirculating flue gases	• Check to see if terminal is on correctly. • May need to install high wind termination cap. • Contact dealer.
Glass fogs up	Normal Condition: after the appliance warms up the glass will clear. **Due to additives in gas, glass may get hazy during operation** Clean as needed.	
Blue Flames	Normal during start up: flames will yellow as the fireplace heats up.	
Flames are burning "dirty" or sooting	Flame impingement	• Check log positioning. • Increase primary air by opening the venturi shutter and/or by opening the vent restrictor. See also "Burners will not remain lit."
Remote control doesn't work	Problem with the remote	• One or more of the batteries are dead. See remote control instructions.
	Problem with fireplace	• The on/off switch is turned to OFF. • The gas control valve is turned to PILOT or OFF. • The pilot has gone out.
BV ONLY: Insufficient air for combustion	• Air tight house. • A vacuum in room due to other air-moving device.	• Supply make up air to the unit.

Parts List - Components

Reference Number	Part Description	Part
1	120°F (49°C) Ceramic Fan Temperature Sensor	EC-001
2	300°F (149°C) Spill Switch	EC-003
3	Thermocouple	EC-009
3	Spark Electrode with Ignitor Cable	EC-011
3	Thermopile	EC-012
3	Fully Assembled Pilot NG	EC-015
3	Fully Assembled Pilot LP	EC-016
3	Pilot Orifice NG Threaded	EC-019
3	Pilot Orifice LP Threaded	EC-020
3	Pilot Gasket	EC-021
4	S.I.T. Piezo Ignitor	EC-023
	Stainless Steel Flex Connector with ⅜" Elbow 18" Long	EC-024
5	FPI Burner Switch	EC-026
6	FPI Fan Controller - 115 V	EC-039
6	FPI Fan Controller Knob	EC-041
	Domestic Power Cord - 115 V	EC-042
	Heyco Strain Relief	EC-044
	Embers (Coal & Wool)	EC-046
7	Convection Blower - 115 V	EC-069
8	Burner Control Assembly NG	EG31-052
8	Burner Control Assembly LP	EG31-053
	Burner Switch Bracket	EG31-075
	Relief Door Gasket	EG31-087
	Window Channel Tape (6 feet)	EG31-089
9	Glass With Tape (6 feet)	EG31-090

Parts List - Components

Reference Number	Part Description	Part Number
10	Door Only - Painted	EG31-092
11	Venturi	EG31-099
	Owner's Manual	EG31-118
	⅜" NTP Male ⅜ Comp. 90° Elbow	EG31-124
	¼" NTP Female ⅜ Comp. 90° Elbow	EG31-125
	LP to NG Conversion Kit	EG31-200
	NG to LP Conversion Kit	EG31-202
12	Conversion Kit BV to DV	EG31-205
13	Conversion Kit DV to BV	EG31-206
	Extension Knob (Pilot)	30-030
	Extension Knob (HI-LO)	30-031
	Relief Door & Gasket	30-034
14	Blank Orifice #73	50-343
	BV Flue Collar Gasket	50-528
	DV Flue Collar Gasket	50-529
	Log Set & Embers	50-588
15	Ceramic Brick Liner	50-610
	Dual Bulb Door Gasket (10 feet)	50-634
16	Pan Burner Only	50-897
17	S.I.T. Nova Valve Convertible	50-1421
	Focus Conversion Kit LP to NG Convertible	50-1434
	Focus Conversion Kit NG to LP Convertible	50-1435
	S.I.T. Valve Conversion Screw With O-Ring	50-1450
	S.I.T. Valve Conversion Screw Cap	50-1451
	Control Panel Decal	50-1539
18	Door with Glass & Gasket	50-1822

Parts Diagram - Body

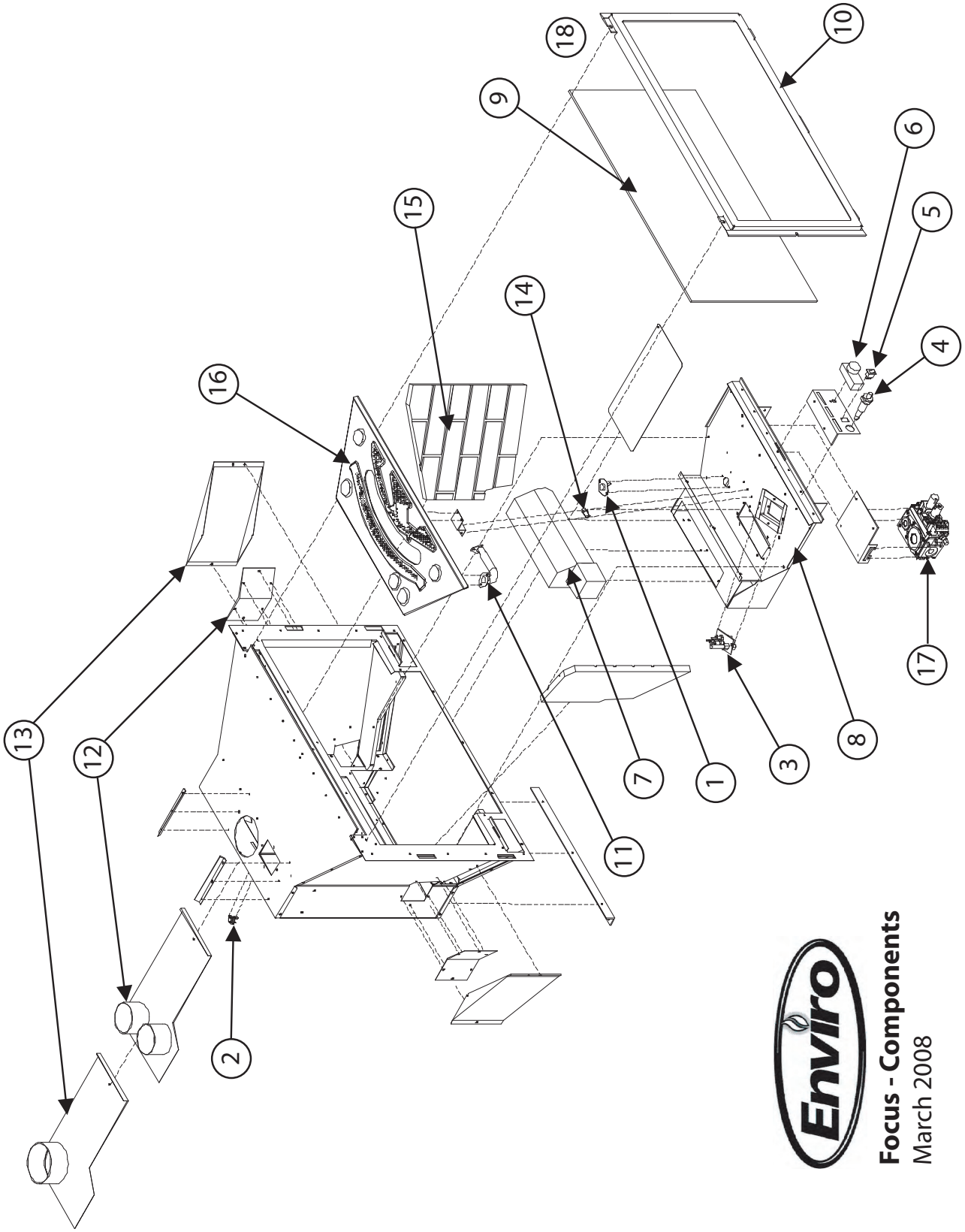

Parts List - Surrounds & Fascia

Reference Number	Part Description	Part Number
	Steel Bay Face - Nickel	50-092
	Steel Bay Face With Glass - Painted	50-141
	Steel Bay Cover - Gold	50-142
	Steel Bay Cover - Nickel	50-143
	Steel Bay 3 Pieces Glass Set with Tape	EG31-091
19	Standard Surround Panel - Black Trim	50-111
19	Standard Surround Trim Only - Brass	EG31-103
19	Standard Surround Trim Only - Black	50-123
19	Standard Surround Trim Only - Nickel	50-135
20	Oversized Surround Panel - Black Trim	50-112
20	Oversized Surround Trim Only - Nickel	50-131
21	Arched Face - Painted Black	EG31-106
21	Arched Face - Gold	EG31-108
22	Square Face - Painted Black	EG31-110
22	Square Face - Gold	EG31-112
23	Cottage Face - No Trim	50-695
24	Cottage Trim Kit - Painted Black	50-696
24	Cottage Trim Kit - Gold	50-597
24	Cottage Trim Kit - Pewter	50-598
24	Cottage Trim Kit - Antique Copper	50-599
25	Cape Cod Fascia - Brushed Nickel	50-1074
25	Cape Cod Fascia - Brushed Gold	50-1075
25	Cape Cod Fascia - Painted	50-1077
26	Cape Cod Doors - Brushed Nickel	50-1079
26	Cape Cod Doors - Brushed Gold	50-1080
26	Cape Cod Doors - Painted	50-1082
27	Unit Panel & Keystone - Painted	50-1377
28	Unit Louvre Set - Painted	50-1378

Parts Diagram - Surrounds & Fascia

Focus - Surround Panels
March 2008

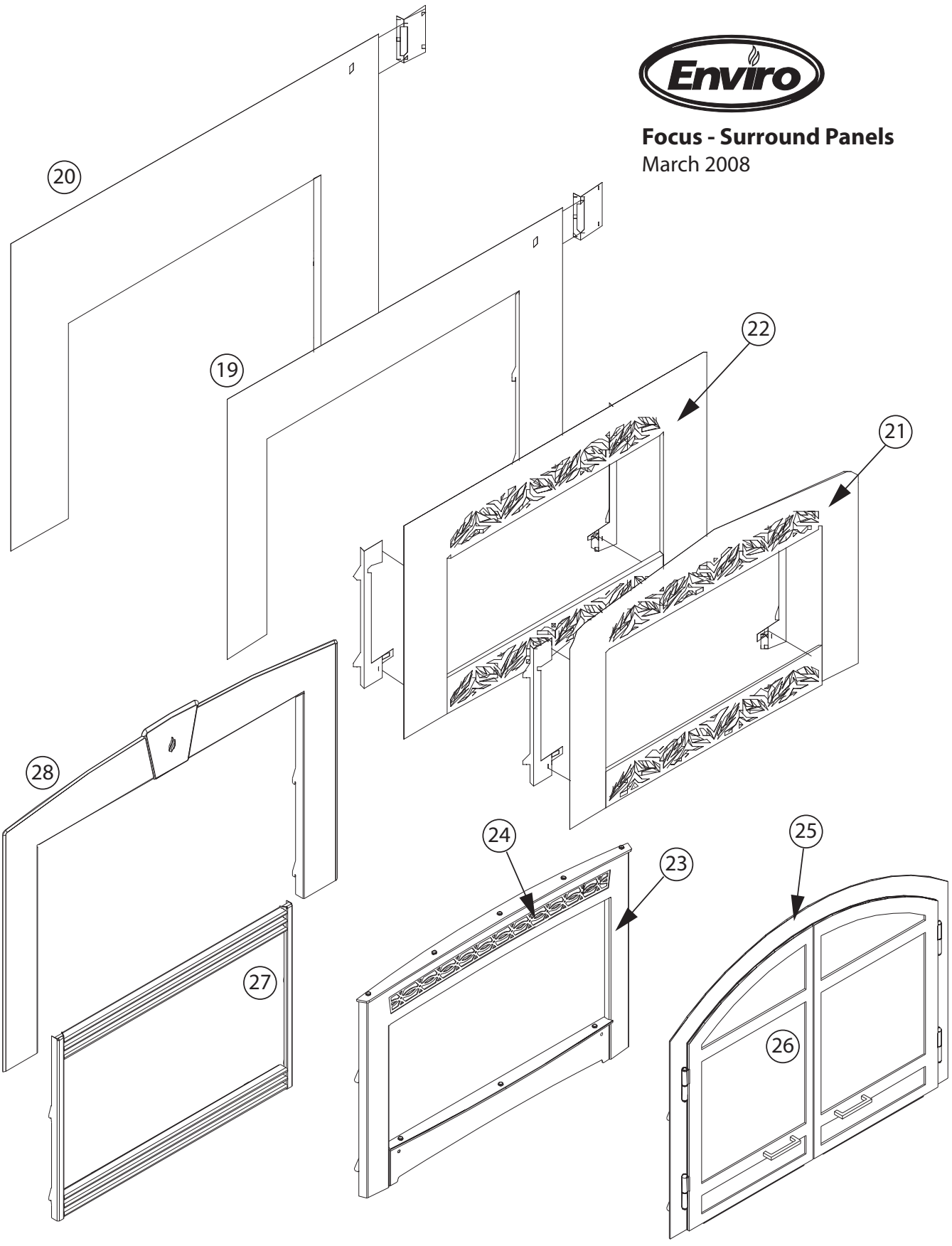

Parts List - Cast

Reference Number	Part Description	Part Number
	Cast surround only - Painted	30-036
	Cast surround only - Antique White	30-035AW
	Cast surround only - Diamond Black	30-035DB
	Cast surround only - Inferno Red	30-035IR
	Cast surround only - Pearl Grey	30-035PG
	Cast surround only - Wedgewood Blue	30-035WB
	Cast surround only - Westport Green	30-035WG
	Cast surround only - Antique Chestnut	50-886
28	Cast surround top piece.only - Painted	50-381
28	Cast surround top piece.only - Antique White	50-382
28	Cast surround top piece.only - Diamond Black	50-383
28	Cast surround top piece.only - Inferno Red	50-384
28	Cast surround top piece.only - Pearl Grey	50-385
28	Cast surround top piece.only - Wedgewood Blue	50-386
28	Cast surround top piece.only - Westport Green	50-387
28	Cast surround top piece.only - Antique Chestnut	50-887
29	Cast surround left piece.only - Painted	50-388
29	Cast surround left piece.only - Antique White	50-389
29	Cast surround left piece.only - Diamond Black	50-390
29	Cast surround left piece.only - Inferno Red	50-391
29	Cast surround left piece.only - Pearl Grey	50-392
29	Cast surround left piece.only - Wedgewood Blue	50-393
29	Cast surround left piece.only - Westport Green	50-394
29	Cast surround left piece.only - Antique Chestnut	50-888
30	Cast surround right piece.only - Painted	50-395
30	Cast surround right piece.only - Antique White	50-396
30	Cast surround right piece.only - Diamond Black	50-397
30	Cast surround right piece.only - Inferno Red	50-398
30	Cast surround right piece.only - Pearl Grey	50-399
30	Cast surround right piece.only - Wedgewood Blue	50-400
30	Cast surround right piece.only - Westport Green	50-401
30	Cast surround right piece.only - Antique Chestnut	50-889
31	Cast front only (no surround, glass, valve door, or clip-on) - Painted	50-402

Parts List - Cast

Reference Number	Part Description	Part Number
31	Cast front only (no surround, glass, valve door, or clip) - Antique White	50-403
31	Cast front only (no surround, glass, valve door, or clip) - Diamond Black	50-404
31	Cast front only (no surround, glass, valve door, or clip) - Inferno Red	50-405
31	Cast front only (no surround, glass, valve door, or clip) - Pearl Grey	50-406
31	Cast front only (no surround, glass, valve door, or clip) - Wedgewood Blue	50-407
31	Cast front only (no surround, glass, valve door, or clip) - Westport Green	50-408
31	Cast front only (no surround, glass, valve door, or clip) - Antique Chestnut	50-890
32	Cast valve access door - Painted	30-028
32	Cast valve access door - Antique White	50-451
32	Cast valve access door - Diamond Black	50-452
32	Cast valve access door - Inferno Red	50-453
32	Cast valve access door - Pearl Grey	50-454
32	Cast valve access door - Wedgewood Blue	50-455
32	Cast valve access door - Westport Green	50-456
32	Cast valve access door - Antique Chestnut	50-891
33	Cast iron front complete - Painted	50-743
33	Cast iron front complete - Antique White	50-744
33	Cast iron front complete - Diamond Black	50-745
33	Cast iron front complete - Pearl Grey	50-746
33	Cast iron front complete - Inferno Red	50-747
33	Cast iron front complete - Wedgewood Blue	50-748
33	Cast iron front complete - Westport Green	50-749
33	Cast iron front complete - Antique Chestnut	50-811
34	Cast trim piece - Painted	EG31-399
34	Cast trim piece - Antique White	EG31-399AW
34	Cast trim piece - Diamond Black	EG31-399DB
34	Cast trim piece - Inferno Red	EG31-399IR
34	Cast trim piece - Pearl Grey	EG31-399PG
34	Cast trim piece - Wedgewood Blue	EG31-399WB
34	Cast trim piece - Westport Green	EG31-399WG
34	Cast trim piece - Antique Chestnut	50-812
	Clip-on assembly only (for cast bay door)	50-462
35	Cast Bay 3 pieces Glass set with tape	50-496

Parts Diagram- Cast Bay Front

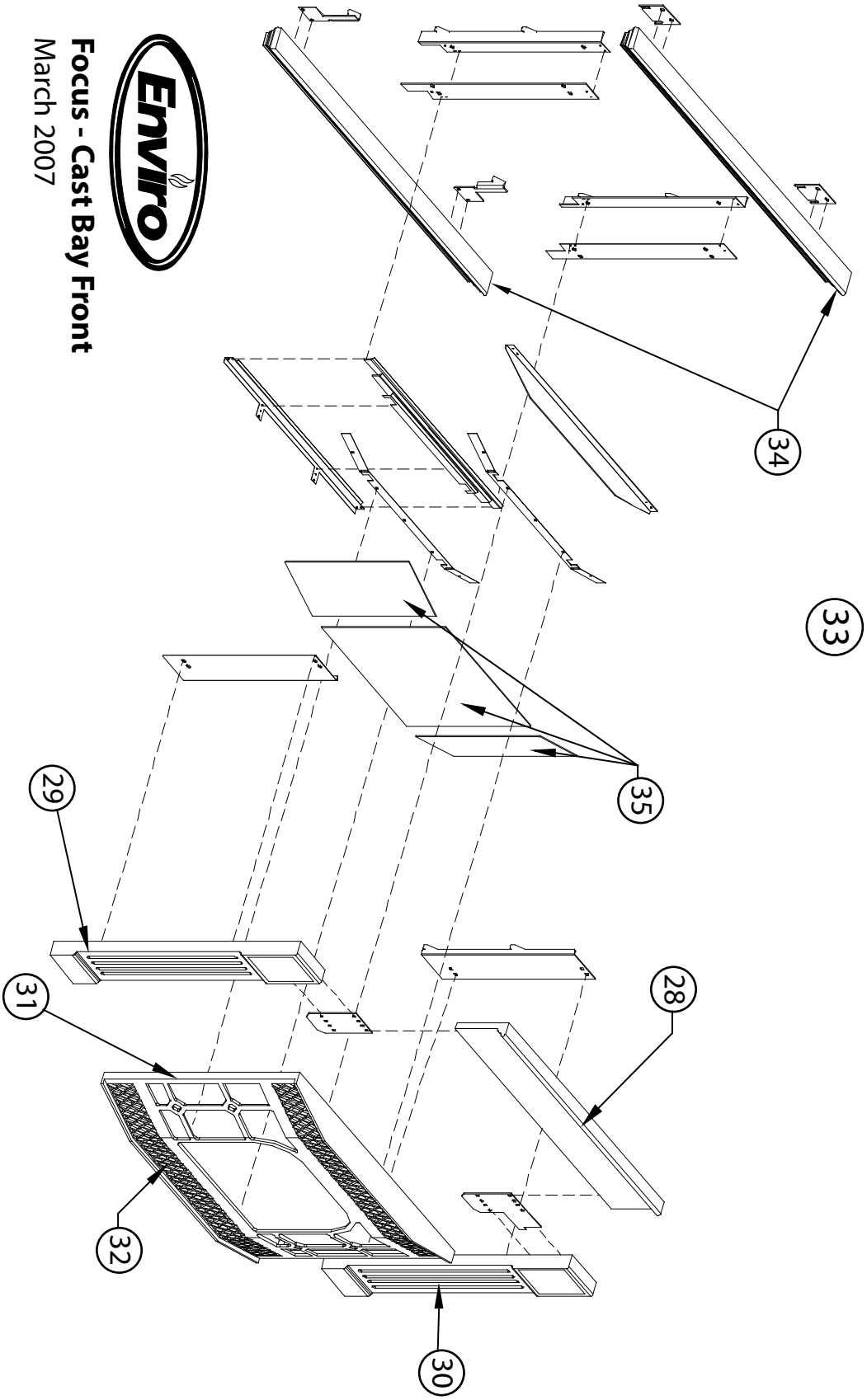

Warranty

Sherwood Industries Ltd. is the manufacturer of the Enviro line of heating products. At Sherwood Industries, our commitment to the highest level of quality and customer service is the most important thing we do. Each Enviro stove is built on a tradition of using only the finest materials and is backed by our Exclusive Lifetime Limited Warranty to the original purchaser. With Enviro, you're not just buying a fireplace or stove, you're buying a company with years of unequalled performance and quality.

Limited Lifetime Warranty:

Under this warranty, Sherwood Industries Ltd. covers the fireplace or stove body and accessories against defects in materials and workmanship, for part repair or replacement for the first seven (7) years and limited labour for the first two (2) years to the original purchaser. This Warranty covers: Firebox, Heat Exchanger, Steel Firebox Panels, Ceramic Logs & Panels, Burner, Ceramic Glass, Pedestals, Panels and Legs. Please see the exclusions and limitation section below as certain restrictions and exclusions apply to this warranty.

Limited Two (2) Year Warranty:

Under this warranty, Sherwood Industries Ltd. covers: Gas Assembly, Blower, Blower control, Temperature Sensors and Wire Harness against defects in materials and workmanship, for part repair or replacement for the first two (2) years and limited labour for the first two (2) years to the original purchaser. Please see the exclusions and limitation section below as certain restrictions and exclusions apply to this warranty.

Limited One (1) Year Warranty:

Under this warranty, Sherwood Industries Ltd. covers all exterior surface finishes against defects in materials and workmanship, for part repair or replacement and limited labour for the first (1) year to the original purchaser. Please see the exclusions and limitations section below as certain restrictions and exclusions apply to this warranty.

Here is how our Warranty works

If you have any concerns with your Enviro product, please contact the dealer where you purchased the fireplace or stove. Your dealer shall make all claims under this warranty in writing.

To the Dealer

When filling out a warranty claim, please complete the following information on an official warranty claim form:

Customer information: Name, address and telephone number of purchaser and date of purchase.

Dealer information: Date of installation, name of installer and dealer, serial number of the appliance, nature of complaint, defects or malfunction, description and part numbers of any parts replaced.

To the Distributor

Sign and verify that work and information are correct.

Exclusions and Limitations:

1. This Warranty does not cover tarnish, discoloration or wear on the plating or paint.
2. This Warranty excludes wear and tear or breakage caused by cleaning, moving or service on log set and panels.
3. A qualified installer must install this stove or fireplace. This Limited Warranty covers defects in materials and workmanship only if the product has been installed in accordance with local building and fire codes; in their absence, refer to the owner's manual. If the product is damaged or broken as a result of any alteration, willful abuse, mishandling, accident, neglect, or misuse of the product, the Limited Warranty does not apply.

Warranty

4. The stove must be operated and maintained at all times in accordance with the instructions in the Owner's Manual. If the unit shows signs of neglect or misuse, it is not covered under the terms of this Warranty policy. Performance problems due to operator error will not be covered by the Limited Warranty policy.
5. As this is a heating appliance, some changes in colour of surface finishes may occur. This is not a flaw and as such is not covered under this warranty.
6. Some minor expansion, contraction, or movement of certain parts and resulting noise, is normal and not a defect and, therefore, is not covered under this Limited Warranty.
7. Misuse includes over-firing. Over-firing this appliance can cause serious damage and will nullify the Limited Warranty.
8. The Limited Warranty will cover glass thermal breakage only and will not cover misuse of the stove glass, including but not limited to glass that is struck, has surface contaminates or has had harsh or abrasive cleaners used on it.
9. This warranty does not cover products made or provided by other manufacturers and used in conjunction with the operation of this stove without prior authorization from Sherwood Industries Ltd. The use of such products may nullify the Limited Warranty on this stove. If unsure as to the extent of this Limited Warranty, contact your authorized Enviro dealer before installation.
10. Sherwood Industries Ltd. will not be responsible for inadequate performance caused by environmental conditions.
11. The Limited Warranty does not cover installation and operational related problems such as use of downdrafts or spillage caused by environmental conditions. Environmental conditions include but are not limited to nearby trees, buildings, roof tops, wind, hills, mountains, inadequate venting or ventilation, excessive offsets, negative air pressures or other influences caused by mechanical systems such as furnaces, fans, clothes dryers etc.
12. The Limited Warranty is void if:
    a) The stove has been operated in atmospheres contaminated by chlorine, fluorine or other damaging chemicals.
    b) The stove is subject to submersion in water or prolonged periods of dampness or condensation.
    c) Any damage to the unit, combustion chamber or other components due to water, or weather damage which is the result of, but not limited to, improper chimney/venting installation.
    c) Salt air in coastal areas or high humidity can be corrosive to the finish; these environments can cause rusting. Damage caused by salt air or high humidity is not covered by the Limited Warranty.
13. Exclusions to the Limited Warranty include: injury, loss of use, damage, failure to function due to accident, negligence, misuse, improper installation, alteration or adjustment of the manufacturer's settings of components, lack of proper and regular maintenance, alteration, or act of God.
14. The Limited Warranty does not cover damage caused to the fireplace or stove while in transit. If this occurs, do not operate the stove and contact your courier and/or dealer.
15. Limited Warranty does not extend to or include firebox paint, door or glass gaskets with damage caused by normal wear and tear, or exterior paint discoloration or chipping, worn gaskets, etc.
16. The Limited Warranty does not include damage to the unit caused by abuse, improper installation, or modification of the unit.
17. Damage to plated surfaces caused by fingerprints, scratches, melted items, or other external scores and residues left on the plated surfaces from the use of abrasive cleaners or polishes is not covered in this warranty.
18. The Limited Warranty does not cover tarnish, discoloration or wear on the plated surfaces.
19. The paint on the Metal Brick Liner may peel. This is due to the extreme conditions applied to the paint during normal usage. It is not a flaw and is not covered under warranty.

Warranty

20. Sherwood Industries Ltd. is free of liability for any damages caused by the fireplace or stove, as well as inconvenience expenses and materials. The Limited Warranty does not cover incidental or consequential damages.
21. The Limited Warranty does not cover any loss or damage incurred by the use or removal of any component or apparatus to or from the Enviro fireplace or stove without the express written permission of Sherwood Industries Ltd. and bearing a Sherwood Industries Ltd. label of approval.
22. Any statement or representation of Enviro products and their performance contained in Enviro advertising, packaging literature, or printed material is not part of the Limited Warranty.
23. The Limited Warranty is automatically voided if the fireplace or stove's serial number has been removed or altered in any way. If the stove is used for commercial purposes, it is excluded from the Limited Warranty.
24. No dealer, distributor, or similar person has the authority to represent or warrant Enviro products beyond the terms contained within the Limited Warranty. Sherwood Industries Ltd. assumes no liability for such warranties or representations.
25. Sherwood Industries Ltd. will not cover the cost of the removal or re-installation of the stove, hearth, facing, mantels, venting or other components.
26. Labour to replace or repair items under this Limited Warranty will be covered per our warranty service fee reimbursement schedule. Labour rates are set per component and as such total labour costs may not be covered.
27. Sherwood Industries Ltd. is not liable for freight or labour on any stove replaced in-field and is not liable for travel costs for service work. In the event of in-home repair work, the customer will pay any in-home travel fees or service charges required by the Authorized Dealer.
28. At no time will Sherwood Industries Ltd. be liable for any consequential damages which exceed the purchase price of the unit. Sherwood Industries Ltd. has no obligation to enhance or modify any stove once manufactured (example: as a stove evolves, field modifications or upgrades will not be performed).
29. This Limited Warranty is applicable only to the original purchaser and it is non-transferable.
30. This warranty only covers Enviro products that are purchased through an authorized Enviro dealer.
31. If for any reason any section of the Limited Warranty is declared invalid, the balance of the warranty remains in effect and all other clauses shall remain in effect.
32. The Limited Warranty is the only warranty supplied by Sherwood Industries Ltd., the manufacturer of the stove. All other warranties, whether express or implied, are hereby expressly disclaimed and purchaser's recourse is expressly limited to the Limited Warranty.
33. Sherwood Industries Ltd. and its employees or representatives will not assume any damages, either directly or indirectly, caused by improper usage, operation, installation, servicing or maintenance of this stove.
34. Sherwood Industries Ltd. reserves the right to make changes without notice. Please complete and mail the warranty registration card and have the installer fill in the installation data sheet in the back of the manual for warranty and future reference.
35. Sherwood Industries Ltd. is responsible for stocking parts for a maximum of seven (7) years after discontinuing the manufacture or incorporation of the item into its products. An exception to this would be if an OEM supplier is not able to supply a part.

Installation Data Sheet

The following information must be recorded by the installer for warranty purposes and future reference.

NAME OF OWNER:

_____

ADDRESS:

_____

_____

_____

PHONE:_____

NAME OF DEALER:

_____

ADDRESS:

_____

_____

_____

PHONE:_____

MODEL:_____

SERIAL NUMBER:_____

DATE OF PURCHASE: _____ (dd/mm/yyyy)

DATE OF INSTALLATION:_____(dd/mm/yyyy)

☐ NATURAL GAS (NAT) ☐ PROPANE(LPG)

INLET GAS PRESSURE:_____in wc

MAIN BURNER ORIFICE:_____# DMS

PILOT ORIFICE #_____OR_____in diam.

INSTALLER'S SIGNATURE:

_____

NAME OF INSTALLER:

_____

ADDRESS:

_____

_____

_____

PHONE:_____

MANUFACTURED BY:
SHERWOOD INDUSTRIES LTD.
6782 OLDFIELD RD. SAANICHTON, BC, CANADA V8M 2A3
www.enviro.com
March 28, 2008
C-11536