SHERWOOD INDUSTRIES IS AN ENVIRONMENTALLY RESPONSIBLE COMPANY. THIS MANUAL IS PRINTED ON RECYCLED PAPER.

PLEASE KEEP THESE INSTRUCTIONS FOR FUTURE REFERENCE.

VISTAFLAME

VF 170

PELLET STOVE

TECHNICAL MANUAL



INTERTEK C Warnock Hersey US

PLEASE READ THIS ENTIRE MANUAL BEFORE INSTALLATION AND USE OF THIS PELLET-BURNING ROOM HEATER. FAILURE TO FOLLOW THESE INSTRUCTIONS COULD RESULT IN PROPERTY DAMAGE, BODILY INJURY OR EVEN DEATH.

Contact your building or fire officials about restrictions and installation inspection requirements in your area.

50-1864

Table of Contents

Safety Warnings & Recommendations....3
Installation....5
- Rating Label Location....5
- Deciding Where to Locate your Pellet Appliance....5
- Removing Pellet Stove From Pallet....5
- Dimensions & Specifications....6
- Clearances to Combustibles....7
- Hearth Shield Installation....7
- Thermostat Installation....7
- Vent Termination Requirements....8
- Outside Fresh-Air Connection....9
- Exhaust And Fresh Air Intake Locations....9
- Mobile Home Installation....10
- Corner Through Wall Installation....10
- Horizontal Exhaust Through Wall Installation....11
- RECOMMENDED - Through Wall With Vertical Rise and Horizontal Termination Installation....13
- Through Concrete Wall With Vertical Rise Installations....13
- Outside Vertical Installations....14
- Inside Vertical Installations....15
- Hearth Mount Installation....16
- Slider/Damper Set-Up....17

Troubleshooting....18
Wiring Diagram....21
Parts List....22
Parts Diagram - Components....24
Parts Diagram - Steel....25
Warranty....26
Installation Data Sheet....29

NATIONAL FIREPLACE INSTITUTE NFI CERTIFIED www.nficertified.org

We recommend that our pellet hearth products be installed and serviced by professionals who are certified in the U.S. by the National Fireplace Institute® (NFI) as NFI Pellet Specialists or who are certified in Canada by Wood Energy Technical Training (WETT).

Wood Energy Technical Training www.wettinc.ca

Safety Warnings & Recommendations

* **This manual is designed for the technician in conjunction with the owner's manual. ***

Please read this entire Technical Manual before installing or operating your Vista Flame Pellet Stove. Failure to follow these instructions may result in property damage, bodily injury or even death. Any unauthorized modification of the appliance or use of replacement parts not recommended by the manufacturer is prohibited. All national and local regulations and shall be complied with when operating this appliance.

Caution: Do not connect to any air distribution duct or system.

Warning: Never place wood, paper, furniture, drapes or other combustible materials within 80cm (31½") of the front of the unit, 30cm (12") from each side, and 10cm (4") from the back of the unit. Do not let children or pets touch it when it is hot.

To prevent the possibility of a fire, ensure that the appliance is properly installed by adhering to the installation instructions. An Vista Flame dealer will be happy to assist you in obtaining information with regards to your local building codes and installation restrictions.

FIRE EXTINGUISHER AND SMOKE DETECTION: All homes with a pellet burning stove should have at least one fire extinguisher in a central location known to all in the household. Smoke detectors should be installed and maintained in the room containing the stove. If it sounds the alarm, correct the cause but do not deactivate. You may choose to relocate the smoke detection devise within the room; DO NOT REMOVE THE SMOKE DETECTOR FROM THE ROOM.

CHIMNEY OR RUN AWAY FIRE: Call local fire department (or dial 911). Close the draft fully. Extinguish the fire in the burn pot liner with a cup of water and close the door. Examine the flue pipes, chimney, attic, and roof of the house, to see if any part has become hot enough to catch fire. If necessary, spray with fire extinguisher or water from the garden hose. IMPORTANT: Do not operate the stove again until you are certain the chimney and its lining have not been damaged.

OPERATION: The door and ash drawer must be kept closed when the unit is in operation to prevent fume spillage and for proper and safe operation of the pellet stove. Also ensure all gaskets on the door are checked and replaced when necessary. **Unit hot while in operation. Keep children, clothing and furniture away. Contact may cause skin burns.**

CAUTION: When operating during adverse weather, if the unit exhibits dramatic changes in combustion, stop using the unit immediately.

FUEL: This pellet stove is designed and approved to only burn wood pellet fuel with up to 3% ash content. Dirty fuel will adversely affect the operation and performance of the unit and may void the warranty. Check with your dealer for fuel recommendations. **THE USE OF CORDWOOD IS PROHIBITED BY LAW. Do not burn garbage or flammable fluids such as gasoline, naptha or engine oil.**

SOOT: Operation of the stove with insufficient combustion air will result in the formation of soot which will collect on the glass, the heat exchanger, the exhaust vent system, and may stain the outside of the house. This is a dangerous situation and is inefficient. Frequently check your stove and adjust the slider/damper as needed to ensure proper combustion. **See: "Slider/Damper Setting".**

CLEANING: There will be some build up of fly ash and small amounts of creosote in the exhaust. This will vary due to the ash content of the fuel used and the operation of the stove. It is advisable to inspect and clean the exhaust vent semi-annually or every two tons of pellets.
The appliance, flue gas connector and the chimney flue require regular cleaning. Check them for blockage prior to re-lighting after a prolonged shut down period.

ASHES: Disposed ashes should be placed in a metal container with a tight fitting lid. The closed container of ashes should be on a non-combustible surface, well away from all combustible materials pending final disposal. If the ashes are disposed of by burial in soil or otherwise locally dispensed, they should be retained in the closed container until all cinders have thoroughly cooled.

Safety Warnings & Recommendations

ELECTRICAL: The use of a surge protected power bar is recommended. The unit must be grounded. The grounded electrical cord should be connected to a standard 110-120 volts (3.6 Amps), 60 hertz electrical outlet and also must be accessible. Ensure the polarity to the outlet, the unit will be plugged into, is correct as incorrect polarity can affect the unit's operation. If the power cord should become damaged, a replacement power cord must be purchased from the manufacturer or a qualified Vista Flame dealer. Be careful that the electrical cord is not trapped under the appliance and that it is clear of any hot surfaces or sharp edges. This unit's maximum power requirement is 432 watts.

When installing the stove in a mobile home, it must be electrically grounded to the steel chassis of the home and bolted to the floor.

GLASS: Do not abuse the glass by striking or slamming the door. Do not attempt to operate the stove with broken glass. The stove uses ceramic glass. Replacement glass must be purchased from an Vista Flame dealer. Do not attempt to open the door and clean the glass while the unit is in operation or if glass is hot. To clean the glass, use a soft cotton cloth and mild window cleaner, gas or wood stove glass cleaner, or take a damp paper towel and dip into the fly ash. This is a very mild abrasive and will not damage the glass.

KEEP ASH PAN FREE OF RAW FUEL. DO NOT PLACE UNBURNED OR NEW PELLET FUEL IN ASH PAN. A fire in the ash pan may occur.

INSTALLATION: Contact your local building or fire official to obtain a permit and any information on installation restrictions and inspection requirements for your area.

Be sure to maintain the structural integrity of your home when passing a vent through walls, ceilings, or roofs, and all construction meets local building codes. It is recommended that the unit be secured into its position in order to avoid any displacement. This appliance must be installed on a floor with an adequate load bearing capacity, if existing construction doesn't meet load capacity, suitable measures (e.g. load distributing plate) must be taken to achieve it.

DO NOT INSTALL A FLUE DAMPER IN THE EXHAUST VENTING SYSTEM OF THIS UNIT.
DO NOT CONNECT THIS UNIT TO A CHIMNEY FLUE SERVING ANOTHER APPLIANCE.

FRESH AIR: This unit uses large quantities of air for combustion; outside Fresh Air connection is **strongly** recommended. Fresh Air **must** be connected to all units installed in Mobile and "Air Tight Homes" (R2000) or where required by local codes.

Consider all large air moving devices when installing your unit and provide room air accordingly. NOTE: Extractor fans when operating in the same room or space as the appliance may cause problems. Limited air for combustion may result in poor performance, smoking and other side effects of poor combustion.

The stove's exhaust system works with negative combustion chamber pressure and a slightly positive chimney pressure. It is very important to ensure that the exhaust system be sealed and airtight. The ash pan and viewing door must be locked securely for proper and safe operation of the pellet stove.

Do not burn with insufficient combustion air. A periodic check is recommended to ensure proper combustion air is admitted to the combustion chamber. Setting the proper combustion air is achieved by adjusting the slider damper located on the left side of the stove.

Minor soot or creosote may accumulate when the stove is operated under incorrect conditions such as an extremely rich burn (black tipped, lazy orange flames).

If you have any questions with regards to your stove or the above-mentioned information, please feel free to contact your local dealer for further clarification and comments.

SINCE SHERWOOD INDUSTRIES LTD. HAS NO CONTROL OVER THE INSTALLATION OF YOUR STOVE, SHERWOOD INDUSTRIES LTD. GRANTS NO WARRANTY IMPLIED OR STATED FOR THE INSTALLATION OR MAINTENANCE OF YOUR STOVE. THEREFORE, SHERWOOD INDUSTRIES LTD. ASSUMES NO RESPONSIBILITY FOR ANY CONSEQUENTIAL DAMAGE(S).

SAVE THIS INSTRUCTION MANUAL FOR FUTURE REFERENCE.

Installation

Rating Label Location:

The rating label is located on the inside of the hopper lid.

Deciding Where to Locate your Pellet Appliance:

1. Do not install the stove in a bedroom or room where people sleep in.
2. Locate the stove in a large and open room that is centrally located in the house. This will optimize heat circulation.
3. Check clearances to combustibles and for the least amount of interference to house framing, plumbing, wiring, etc.
4. You can vent the stove with approved pipe through an exterior wall behind the unit or pass it through the ceiling and roof. The stove can connect to an existing masonry or metal chimney (must be lined if the chimney is over 6" (15 cm) diameter, or over 28 inches² (180 cm²) cross sectional area).
5. This unit must not be installed directly onto carpet. If it is to be installed on a carpeted area, a solid surface (wood, metal or approved hearth pad) must be installed between the unit and the carpet.
6. This unit uses large quantities of air for combustion; outside Fresh Air connection is **strongly recommended**. Fresh Air **must** be connected to all units installed in Mobile and "Air Tight Homes" (R2000) or where required by local codes.
7. Do not obtain combustion air from an attic, garage or any unventilated space. Combustion air may be obtained from a ventilated crawlspace.
8. The power cord is 8 feet (2.43 m) long and may require a grounded extension cord to reach the nearest electrical outlet.

Removing Pellet Stove From Pallet:

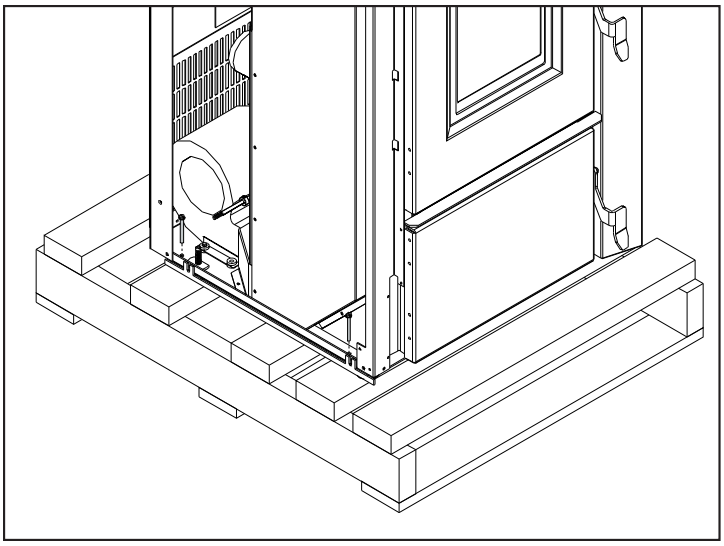

Figure 1: Screws to take out to remove stove from pallet.

1. Remove the right and left hand cabinet sides. Partially back out the two (2) T-20 Torx screws on the back of the each panel and the two (2) located on the front inside edge below the louvers and ash shelf. Pull the panel forward then remove.
2. Remove the two (2) wood screws from each side that are holding the bottom of the stove to the pallet.
3. Re-install the side panels.

Dimensions & Specifications:

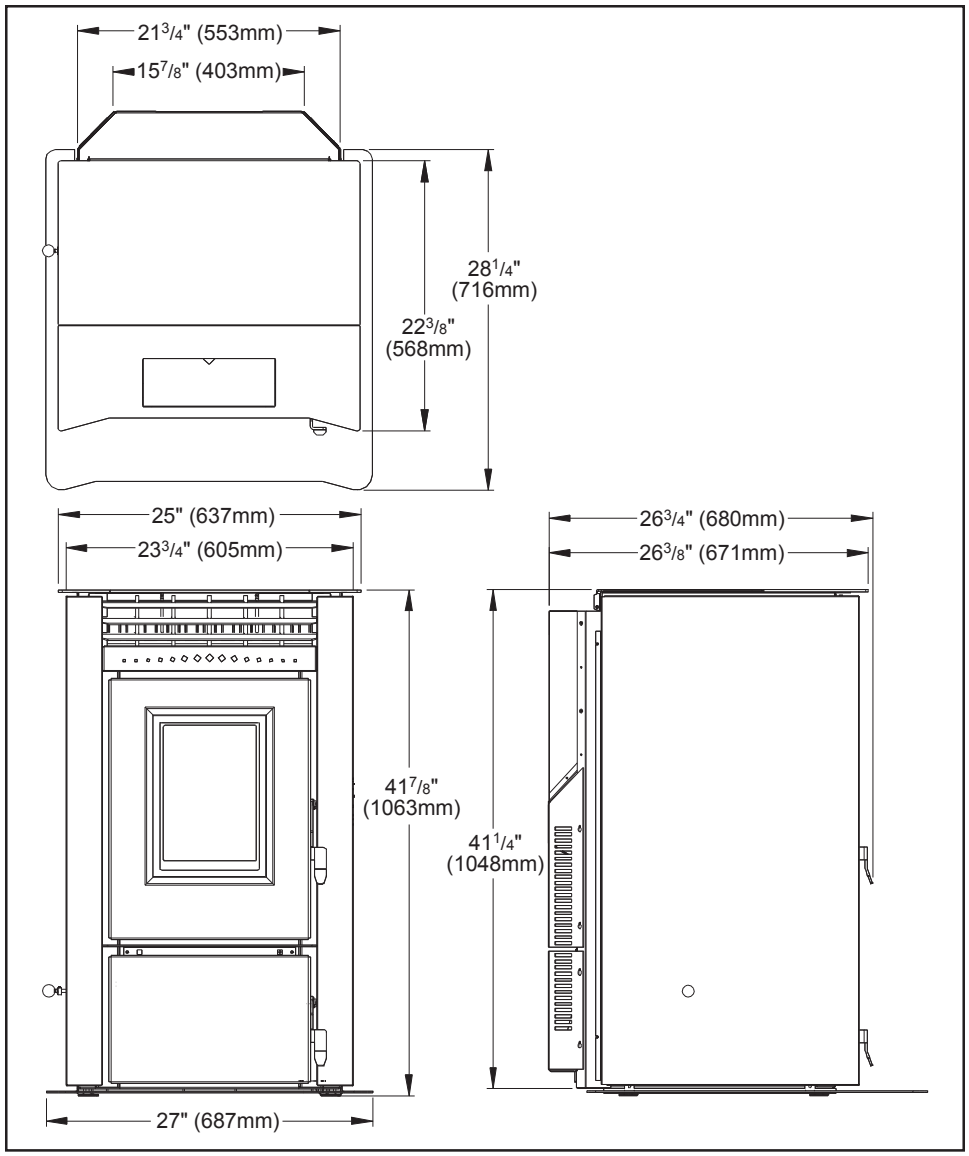

Figure 2: Dimensions of VF170.

Table 1: VF170 Specifications.

Testing Standard	Frequency	Voltage
ASTM 1509-04	60 Hz	110 - 120 V
Fuel type	Current	Max Power
wood pellets - 6mm (¼") dia.	3.6 Amps	432 Watts
Description	Hopper Capacity	Consumption on Low
Residential Wood Pellet Heater	up to 130 lb (59 Kg)	1.7 lb/hr (0.77 Kg/hr)*
	Weight (with full hopper)	Consumption on High
	455 lb (206 Kg)	7.6 - 8.3 lb/hr (3.45-3.76 Kg/hr)*

*Note: Consumption will vary with the type of fuel used.

Installation

Clearances to Combustibles:

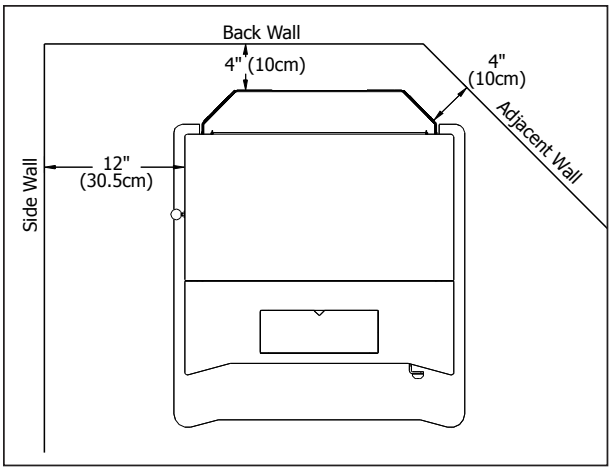

Figure 3: VF170 Clearance to Combustibles.

These dimensions are minimum clearances but it is recommended that you ensure sufficient room for servicing, routine cleaning and maintenance.

Side wall to unit	12 inches	(30.5 cm)
Back wall to unit	4 inches	(10 cm)
Corner to unit	4 inches	(10 cm)
Ceiling height	90 inches	(228.5 cm)

Hearth Shield Installation:

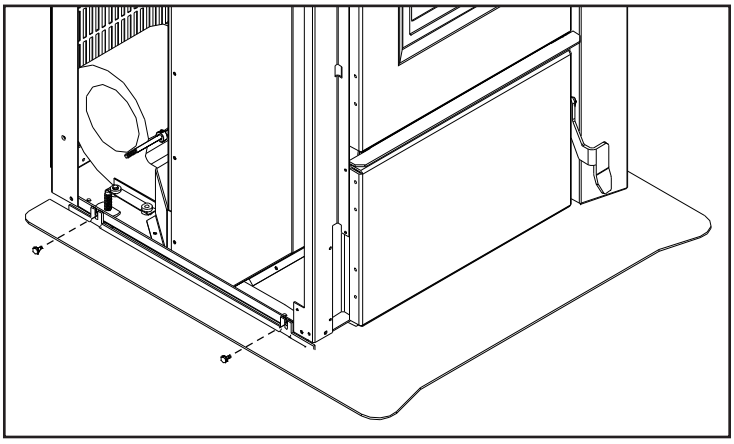

Figure 4: VF170 Hearth Shield Installation.

1. Remove the right and left hand cabinet sides. Partially back out the two (2) T-20 Torx screws on the back of the each panel and the two (2) located on the front inside edge below the louvers and ash shelf. Pull the panel forward then remove.
2. Slide the hearth shield into place.
3. Secure the shield to the unit with two (2) screws on each side (see Figure 4).
4. Re-install the side panels.

Thermostat Installation:

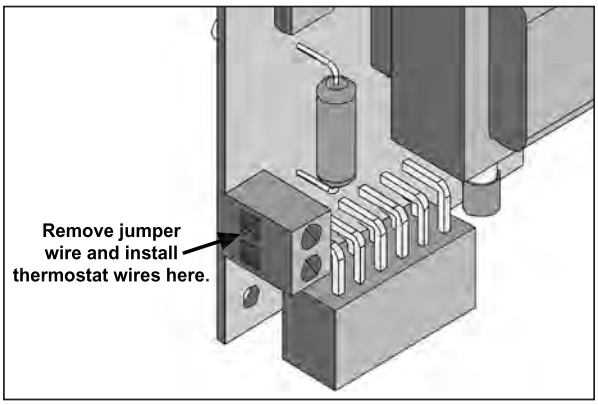

Figure 5: Thermostat wire placement.

1. Install the wall thermostat (12 or 24 Volt rated) in a location that is not to close too the unit but will effectively heat the desired area.
2. Connect the Thermostat or Timer using a 2 x 18 gauge wire from the unit to the thermostat.

If the heat in the room becomes to great, the high limit switch may turn the stove off and the switch will have to be manually reset. To reset the high limit switch, remove the right cabinet side. The switch is found on the air jacket.

Vent Termination Requirements:

IT IS RECOMMENDED THAT YOUR PELLET STOVE BE INSTALLED BY AN AUTHORIZED DEALER/INSTALLER.

Table 2: Use in conjunction with Figure 6 for allowable exterior vent termination locations.

Letter	Minimum Clearance	Description
A	24 in (61 cm)	Above grass, top of plants, wood, or any other combustible materials.
B	48 in (122 cm)	Beside/below any door or window that may be opened. (18" (46 cm) if outside fresh air installed.)
C	12 in (30 cm)	Above any door or window that may be opened. (9" (23 cm) if outside fresh air installed.)
D	24 in (61 cm)	To any adjacent building, fences and protruding parts of the structure.
E	24 in (61 cm)	Below any eave or roof overhang
F	12 in (30 cm)	To outside corner.
G	12 in (30 cm)	To inside corner, combustible wall (vertical and horizontal terminations).
H	3 ft (91 cm) within a height of 15 ft (4.5 m) above the meter/regulator assembly	To each side of center line extended above natural gas or propane meter/ regulator assembly or mechanical vent.
I	3 ft (91 cm)	From any forced air intake of other appliance
J	12 in (30 cm)	Clearance to non-mechanical air supply inlet to building, or the combustion air inlet to any appliance.
K	24 in (61 cm)	Clearance above roof line for vertical terminations.
L	7 ft (2.13 m)	Clearance above paved sidewalk or paved driveway located on public property.

1. Do not terminate the vent in any enclosed or semi-enclosed areas such as a carport, garage, attic, crawlspace, narrow walkway, closely fenced area, under a sundeck or porch, or any location that can build up a concentration of fumes such as stairwells, covered breezeway, etc.

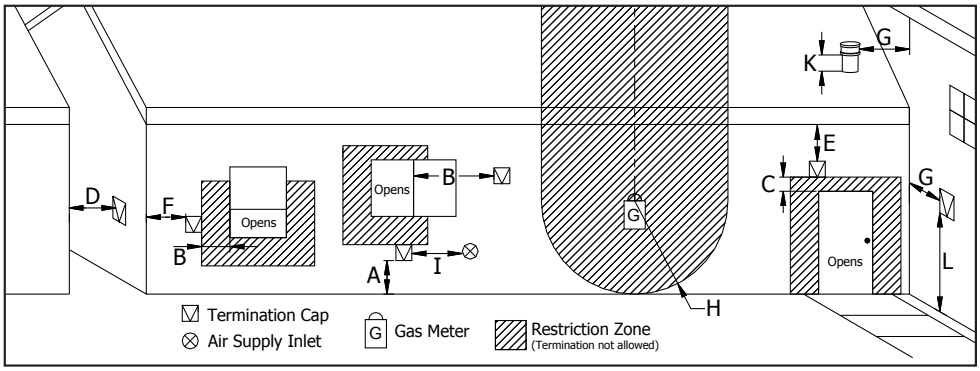

Figure 6: Use in conjunction with Table 2 for allowable exterior vent termination locations.

2. Vent surfaces can become hot enough to cause burns if touched by children. Non-combustible shielding or guards may be required.
3. Termination must exhaust above the inlet elevation. It is recommended that at least five feet of vertical pipe be installed outside when the appliance is vented directly through a wall, to create some natural draft to prevent the possibility of smoke or odor during appliance shut down or power failure. This will keep exhaust from causing a nuisance or hazard from exposing people or shrubs to high temperatures. In any case, the safest and preferred venting method is to extend the vent through the roof vertically.
4. Distance from the bottom of the termination and grade is 12" (30 cm) minimum. This is conditional upon the plants and nature of grade surface. The exhaust gases are hot enough to ignite grass, plants and shrubs located in the vicinity of termination. The grade surface must not be lawn.
5. If the unit is incorrectly vented or the air to fuel mixture is out of balance, a slight discoloration of the exterior of the house might occur. Since these factors are beyond the control of Sherwood Industries Ltd, we grant no guarantee against such incidents.

NOTE: Venting terminals shall not be recessed into walls or siding.

Outside Fresh-Air Connection:

This Heater must have adequate air for proper combustion in the room that it is installed.

A Fresh-air intake is strongly recommended for all installations. Failure to install intake air may result in improper combustion as well as the unit smoking during power failures.

The inlet to the intake must be below and a minimum of 12" (30cm) away from the unit exhaust outlet.

Outside fresh air is mandatory when installing this unit in airtight homes and mobile homes.

When connecting to an outside fresh air source, do not use plastic or combustible pipe. A 3" minimum (76 mm) ID (inside diameter) steel, aluminum or copper pipe or ducting should be used. It is recommended, when you are installing a fresh air system, to keep the number of bends in the pipe to a minimum.

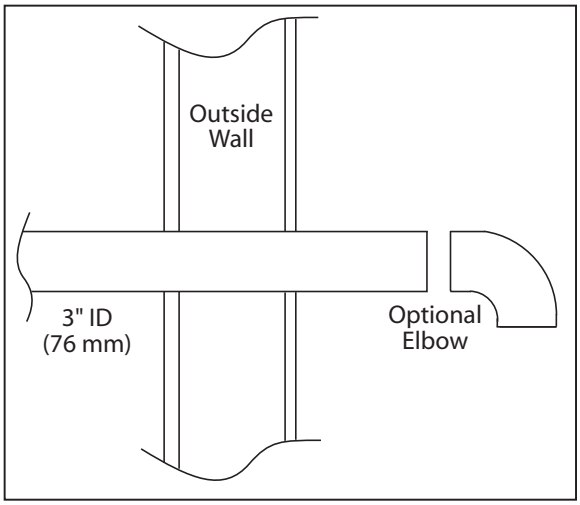

Figure 7: Outside Air Connection.

Exhaust And Fresh Air Intake Locations:

This unit uses a 4" exhaust vent.

EXHAUST:
Base of unit to center of flue
min. 14 3/16" (361 mm)
Center of unit to center of flue
4 3/16" (107 mm)

FRESH AIR INTAKE.
Base of unit to center of intake
min. 14 3/16" (361 mm)
Center of unit to center of intake
5 1/8" (130 mm)

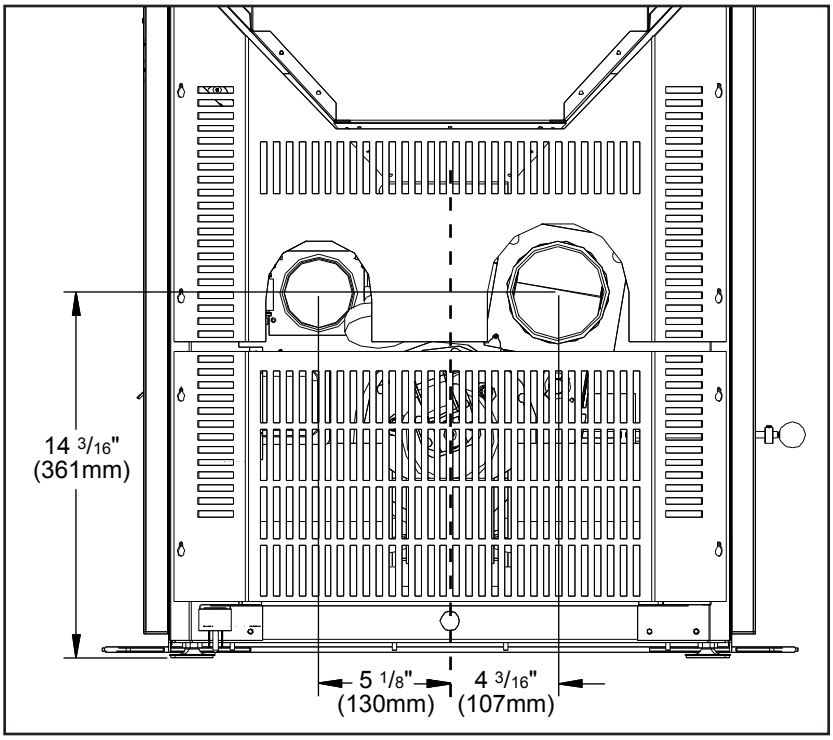

Figure 8: VF170 Inlet and Outlet Location.

Installation

Mobile Home Installation:

- Secure the heater to the floor using the four (4) holes in the pedestal.
- Ensure the unit is electrically grounded to the chassis of your home (permanently).
- Do not install in a room people sleep in.
- Outside fresh air is mandatory. Secure outside air connections directly to fresh air intake pipe and secure with three (3) screws evenly spaced.

CAUTION: THE STRUCTURAL INTEGRITY OF THE MANUFACTURED HOME FLOOR, WALL AND CEILING/ROOF MUST BE MAINTAINED.

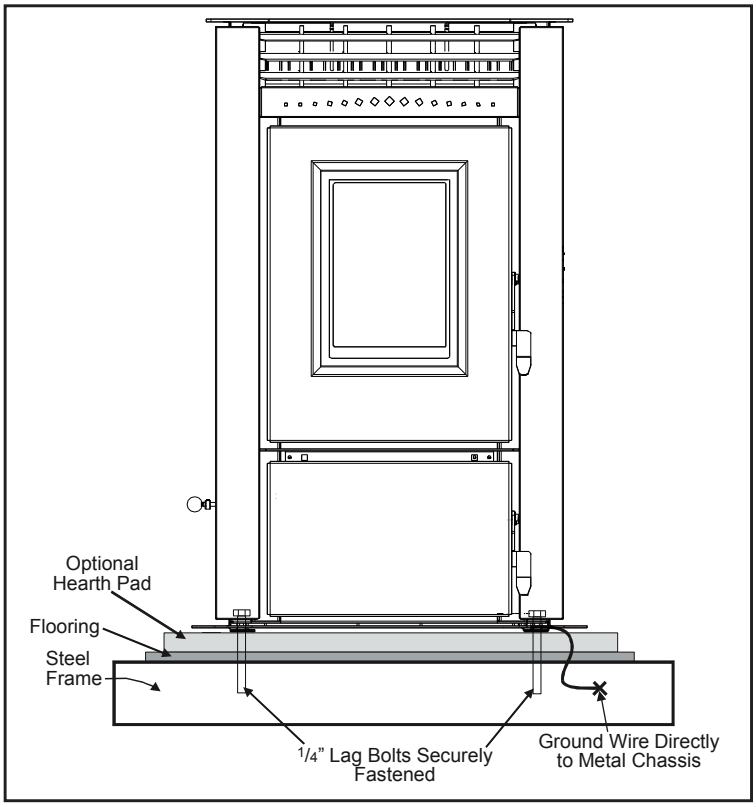

Figure 9: Mobile home installation.

Corner Through Wall Installation:

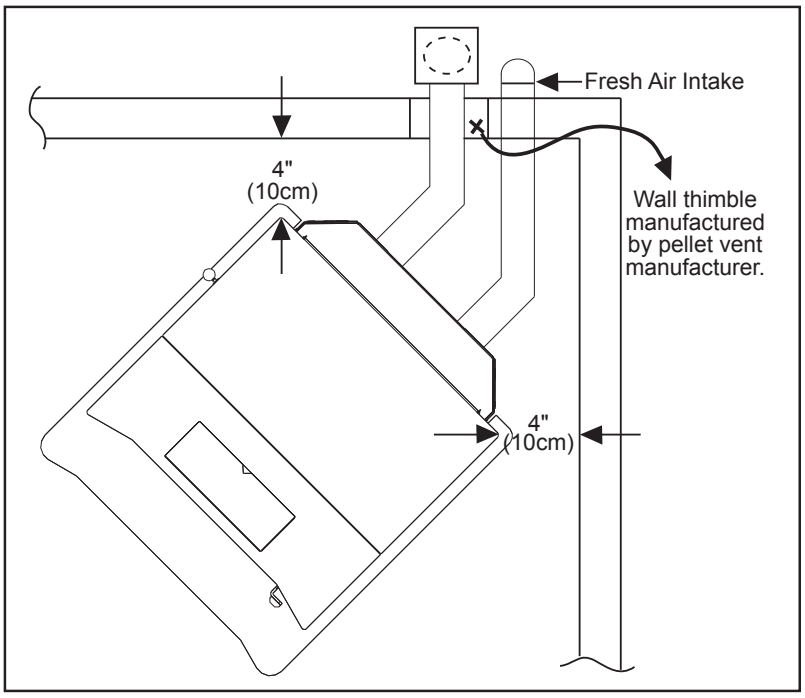

Figure 10: Corner Installation.

Horizontal Exhaust Through Wall Installation:

Vent installation: install vent at clearances specified by the vent manufacturer.

A chimney connector shall not pass through an attic or roof space, closet or similar concealed spaces, or a floor, or ceiling. Where passage through a wall or partition of combustible construction is desired, the installation must conform to CAN/CSA-B365 Installation Code for Solid-Fuel-Burning Appliances and Equipment and with all local regulations, including those referring to regional and national. Only use venting of L or PL type with an inside diameter of 4 inches (10 cm).

1. Place the appliance 15” (37.5 cm) away from the wall. If the stove is to be set on a hearth pad, set the unit on it.
2. Locate the center of the exhaust pipe on the stove. Extend that line to the wall. Once you have located the center point on the wall, refer to pellet vent manufacturer installation instructions for correct hole size and clearance to combustibles.
3. Install the wall thimble as per the instructions written on the thimble. Maintain an effective vapour barrier in accordance with local building codes.
4. Install a length of vent pipe into the wall thimble. Try not to have joints inside the thimble. The pipe should install easily into the thimble.
5. Connect the exhaust vent pipe to the exhaust pipe on the stove. Seal the connection with high temperature silicone.
6. Install the fresh air intake (see Outside Fresh Air Connection).
7. Push the stove straight back, leaving a minimum of 4” (10 cm) clearance from the back of the stove to the wall. Seal the vent pipe to the thimble with high temperature silicone.

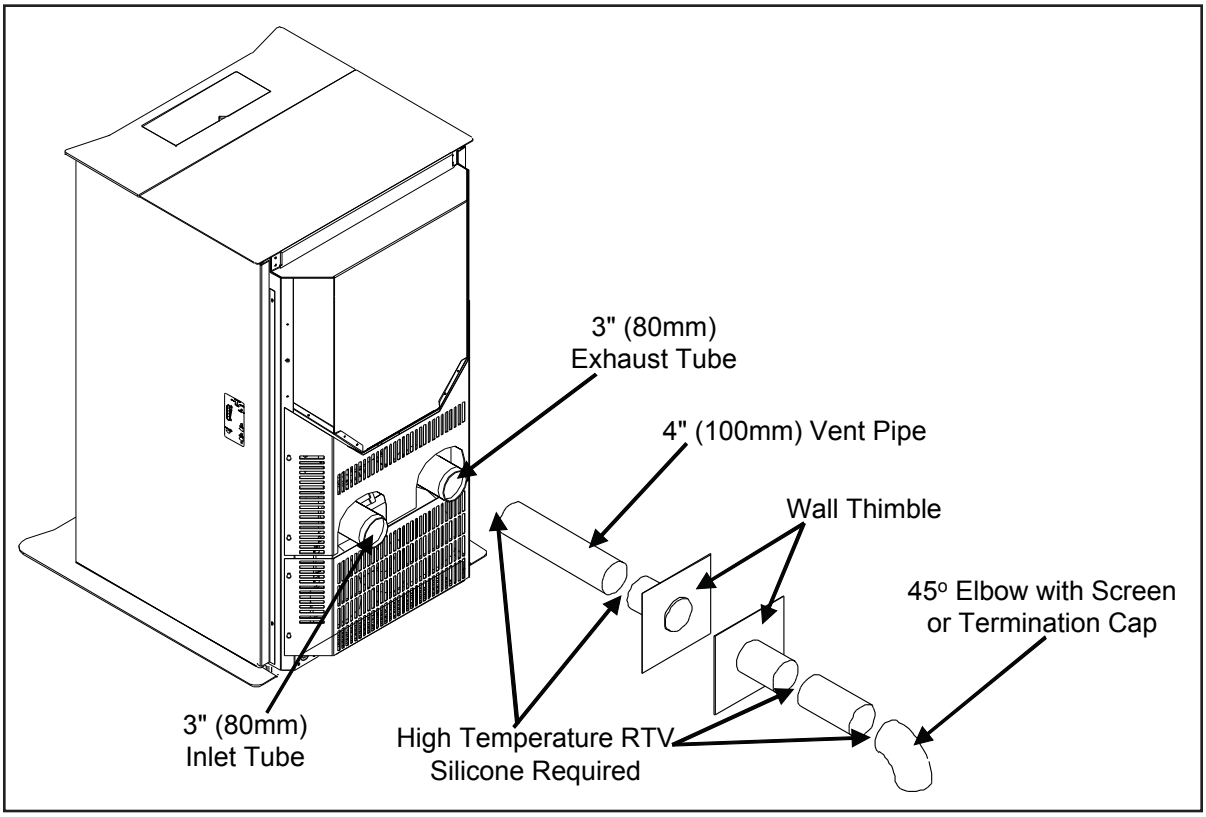

Figure 11: Straight through wall Installation.

8. The pipe must extend at least 12” (30 cm) away from the building. If necessary, bring another length of pipe to the outside of the home to connect to the first section. Do not forget to place high temperature silicone around the pipe that passes through the thimble.
9. Install a vertical pipe, or if all requirements for direct venting are met, install vent termination.The stainless steel cap termination manufactured by the vent manufacturer is recommended. However, when the vent terminates several feet above ground level and there are no trees, plants, etc. within several feet, a 45° elbow can be used as termination. The elbow must be turned down to prevent rain from entering.

NOTE:

- It is recommended that horizontal through wall installations have 3 to 5 feet (91 to 152 cm) of vertical pipe in the system to help naturally draft the unit in the event of extreme weather or a power outage.
- Some horizontal through wall installations may require a “T” and 3 to 5 feet (91 to 152 cm) of vertical pipe outside the building to help draft the unit. This may be required if a proper burn cannot be maintained, after the stove has been tested and the airflow set. This is due to the back pressure in the exhaust caused by airflow around the structure.
- Follow vent manufacturer guidelines for installation of venting. High temp Sealent must be used when connecting vent pipe to the unit’s starter pipe. Improper seals at the vent joints may cause combustion by-products to leak into the room where installed - **seal as required.**

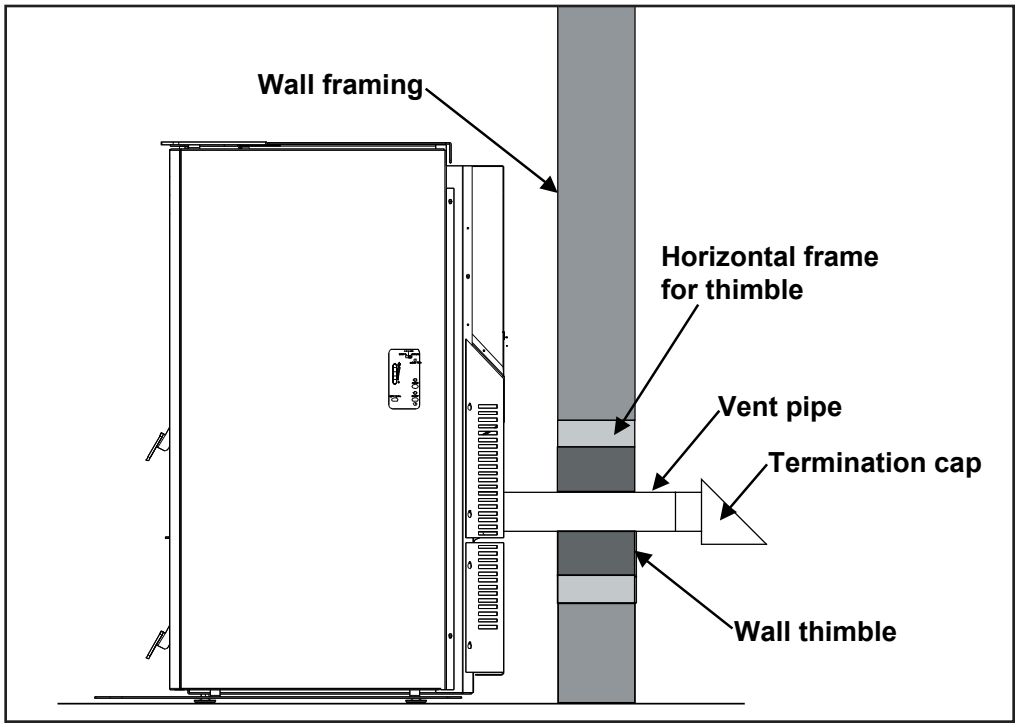

Figure 12: Straight through Wall Installation - Side View.

RECOMMENDED - Through Wall With Vertical Rise and Horizontal Termination Installation:

A 45° down elbow may be used in place of the termination cap (or stainless steel termination hood).

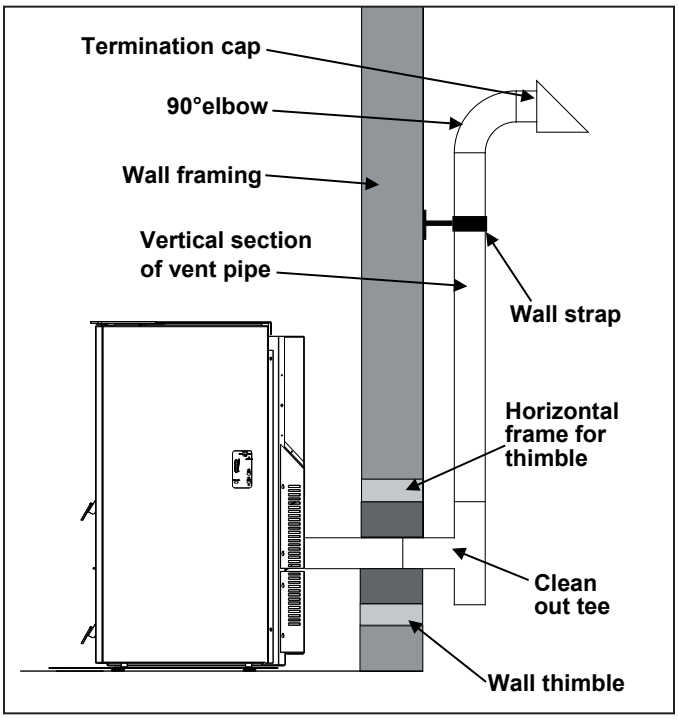

Figure 13: Venting horizontally with rise.

Through Concrete Wall With Vertical Rise Installations:

Installation to use if there is a concrete or retaining wall in line with exhaust vent on pellet stove.

A 45° down elbow may be used in place of the termination cap (or stainless steel termination hood).

The termination must be 12 inches (30 cm) from the outside wall and 12 inches (30 cm) above the ground.

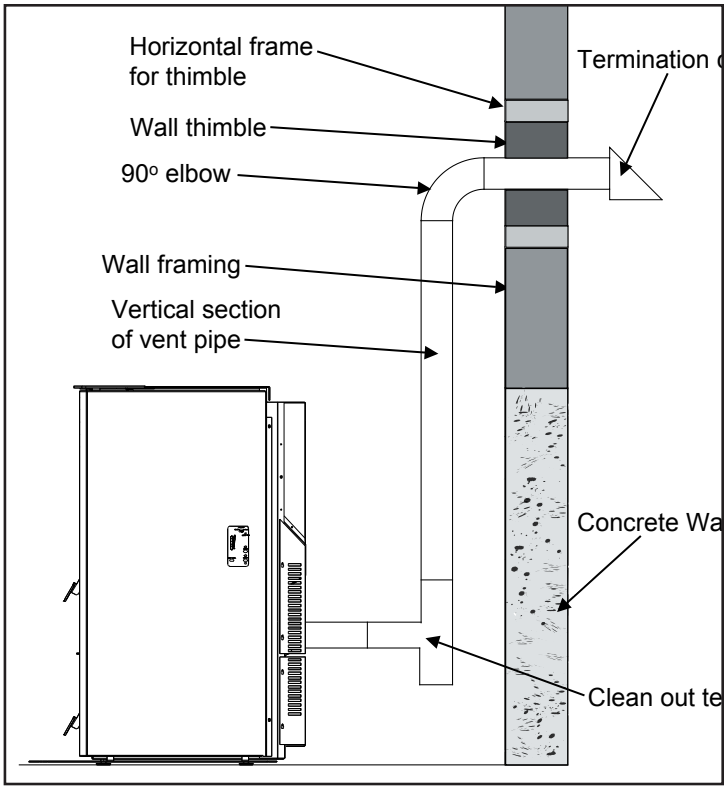

Figure 14: Venting with concrete wall behind unit .

Outside Vertical Installations:

To accomplish an outside vertical pipe installation, follow the "Horizontal Exhaust Through Wall Installations" section and then finish it by performing the following (refer to Figure 15).

1. Install a tee with clean out on the outside of the house.
2. Install PL vent upward from the tee. Make sure that you install support brackets to keep the vent straight and secure.
3. Install ceiling thimble and secure the flashing as you go through the roof.
4. Ensure that the rain cap is approximately 24" (61 cm) above the roof.

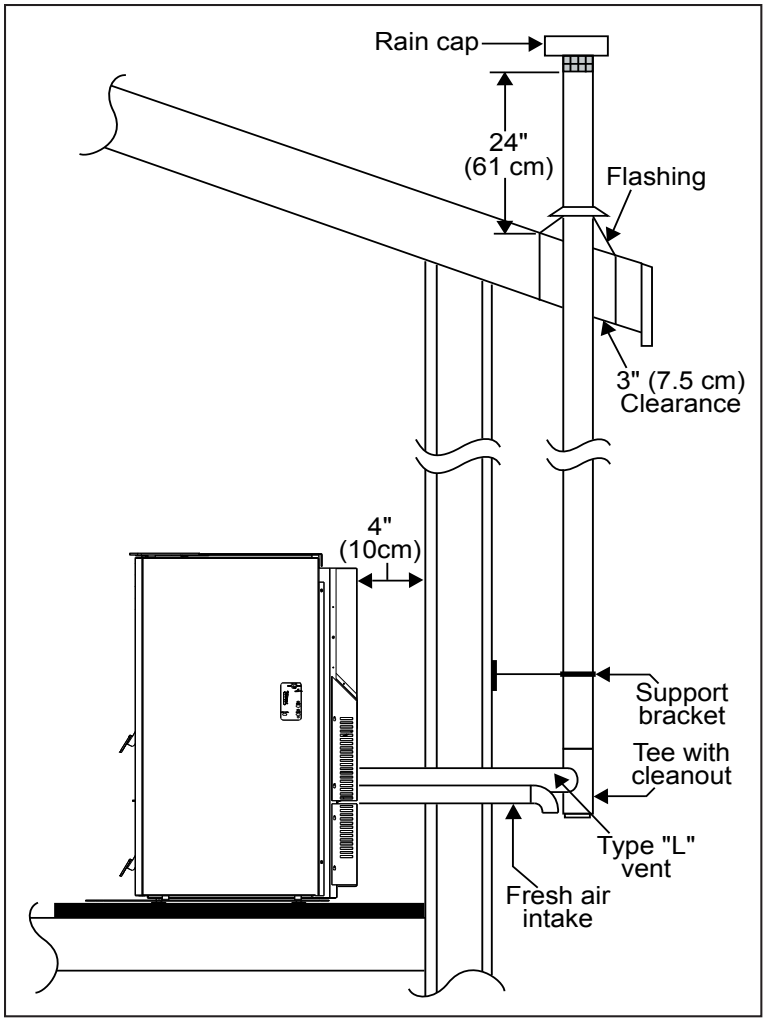

Figure 15: Outside Vertical Installation.

Inside Vertical Installations:

1. Place the unit on the hearth pad if a hearth pad is to be used (or on solid material if installed on a carpeted surface) and space the unit in a manner so when the pellet vent is installed vertically, it will be 3" (7.6 cm) away from a combustible wall.
2. Install the tee with clean out.
3. Install the pellet vent upward from there. When you reach the ceiling, make sure that the vent goes through the ceiling fire stop. Maintain a 3" (7.6 cm) distance to combustibles and keep attic insulation away from the vent pipe. Maintain an effective vapor barrier. Follow the Vent manufacturer's instructions.
4. Finally, extend the pellet vent to go through the roof flashing.
5. Ensure that the rain cap is approximately 24" (60 cm) above the roof.
6. Install the fresh air system.

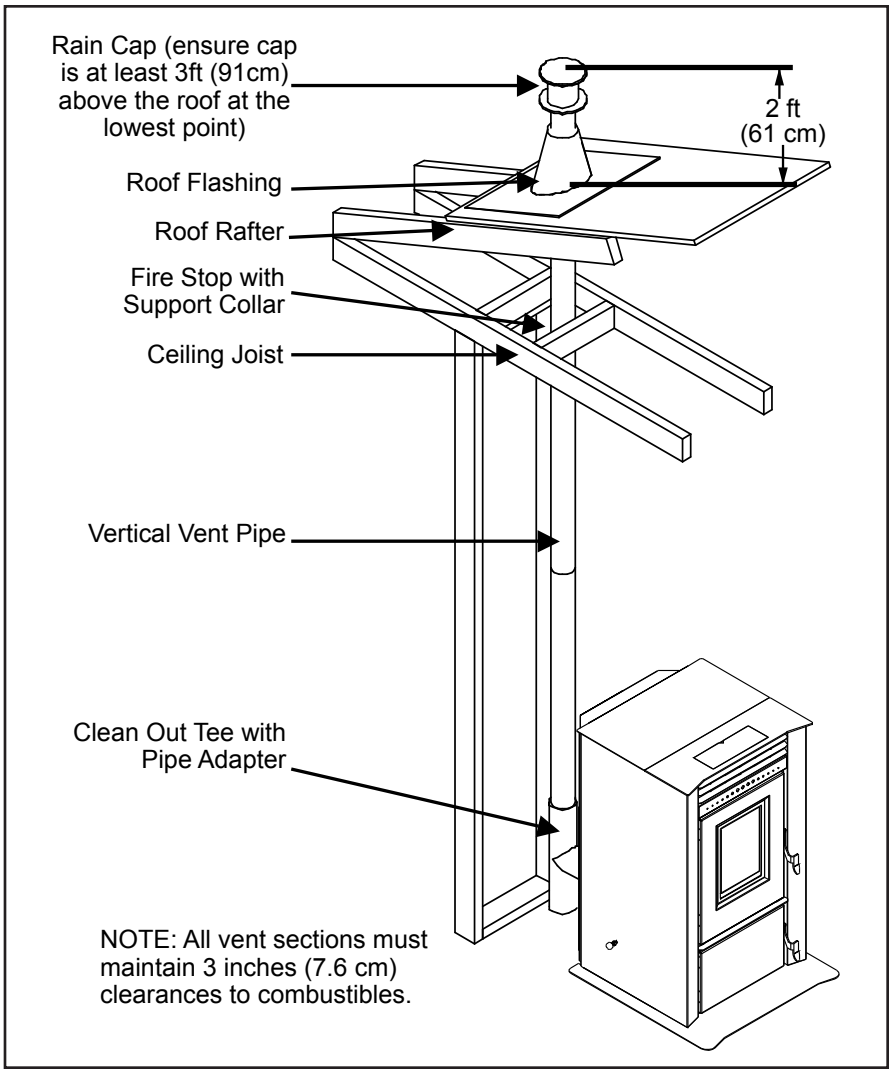

Figure 16: Inside Vertical Installation.

Hearth Mount Installation:

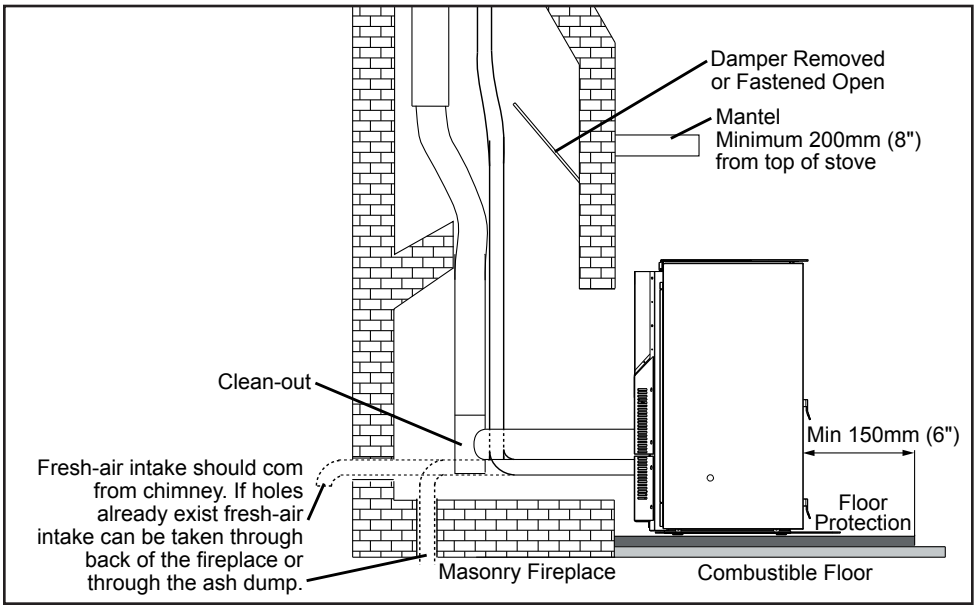

Figure 17: Hearth Mount - Side View.

1. Lock fireplace damper in the open position.
2. Install flexible stainless steel liner or listed pellet vent to the top of the chimney.
3. Install a sealing plate at the top of the chimney.
4. Connect a rain cap and flex adapter to the chimney liner/pipe.
5. Connect a clean-out tee or a 90° elbow to the liner/pipe.
6. Install tee onto stove.

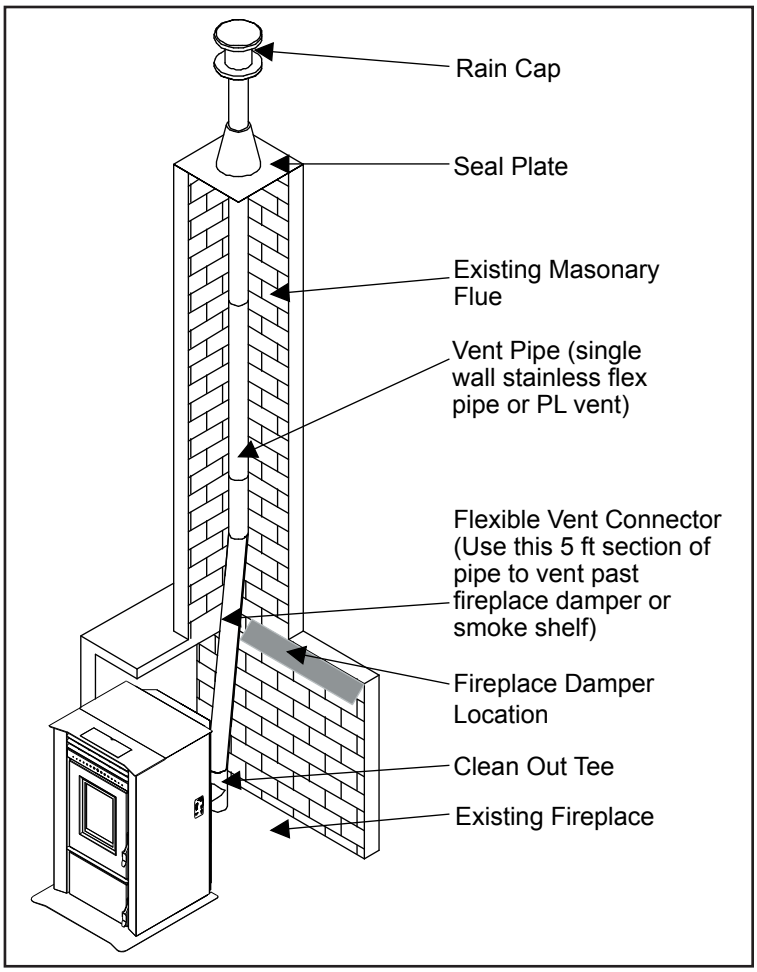

Figure 18: Hearth Mount - Over View.

Slider/Damper Set-Up:

This is used to regulate the airflow through the pellet stove. The slider damper should be set by a trained technician using magnehelic.

1. To install the optional slider damper rod remove the left cabinet side panel. Partially back out the two (2) T-20 Torx screws on the back of the each panel and the two (2) located on the front inside edge below the louvers and ash shelf. Pull the panel forward then remove and locate the slider damper plate.
2. Install the 7/16" (11mm) nut onto the slider damper rod, thread it all the way onto the rod.
3. Slide rod through the hole in the slider damper plate and install the 7/16" (11mm) clinching nut onto the rod. Leave nut a little loose to help it line up when the cabinet is re-installed.
4. Re-install the cabinet side.
5. Mark the rod at either end of range in which the unit runs correctly and has a good flame pattern. Pull the rod out until the flame becomes a short, brisk flame, like a blowtorch; push the rod in a little and mark it. The next mark its the most important and is set with a magnehelic.

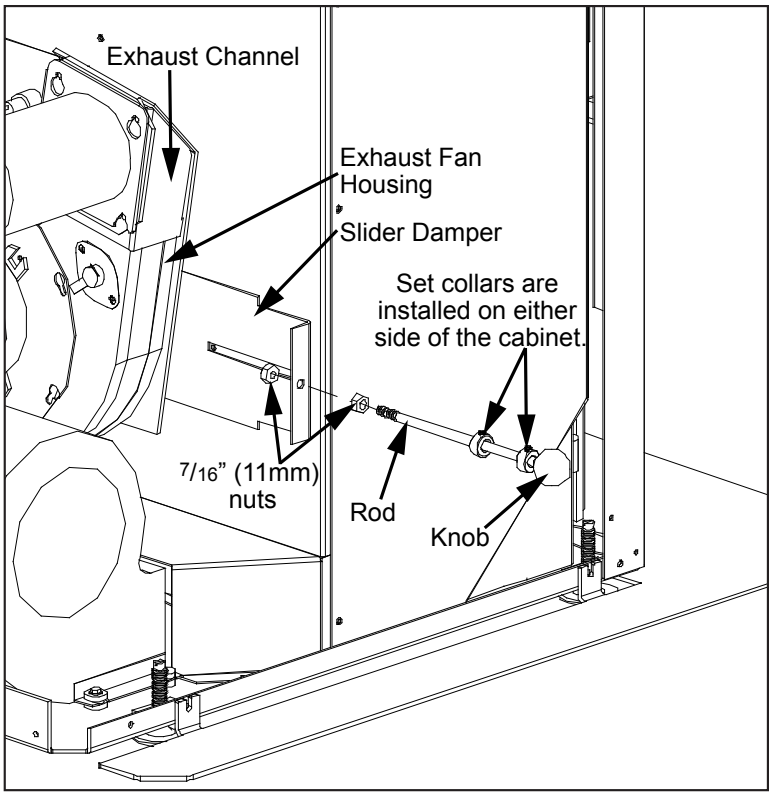

Figure 19: Slider/Damper Plate & Rod in Unit.

IMPORTANT: Taking a reading of vacuum pressure inside the firebox with a magnehelic gauge should be used to set the slider for best combustion. The slider damper should be set only on a hot stove (operating for thirty (30) minutes or more) by using a Magnahelic Pressure Gauge to measuring the pressure in the firebox. **The best settings are a reading of approximately 0.14 - 0.15 inches of water column (34.8 - 37.3 Pa) on the high fire setting. Some fuels may require higher or lower settings.** The reading can be taken from the ⅛" (3 mm) hole located on the front of the unit below the ash shelf on the right hand side.


Figure 20: Efficient Flame.

6. Remove the cabinet side
7. Install a set collar ½" (12mm) in from the inner mark from step #5
8. Re-install the cabinet side.
9. Install a set collar on the outside of the outer mark from step #5
10. Install the black knob on the end of the rod. Check slider damper for smooth operation.

Troubleshooting

DO NOT:

- Service the stove with wet hands. The stove is an electrical appliance, which may pose a shock hazard if handled improperly. Only qualified technicians should deal with possible internal electrical failures.
- Do not remove from the firebox any screws without penetrating oil lubrication.

WHAT TO DO IF:

1. The stove will not start.
2. The stove will not operate when hot.
3. The exhaust blower will not function normally.
4. Light # 3 on Heat output bar flashing.
5. Auger light flashes but auger motor does not turn at all
6. The 200 °F (93 °C) high limit temperature sensor has tripped.
7. The convection blower will not function normally.
8. Igniter- the pellets will not light.
9. Control settings (Heat Level) has no effect on the fire.
10. The stove keeps going out.

***NOTE: All troubleshooting procedures should be carried out by qualified technicians or installers.**

1. The stove will not start.

✓Make sure the stove is plugged in and the wall outlet is supplying power..

✓If the Control Board has been placed in the ON /OFF thermostat mode, then turn the thermostat up to call for heat.

✓Ensure the burn pot liner is correctly placed in the burn pot

✓Check the Heat Level Indicator. - If the # 3 light is flashing (unit may be out of fuel)

✓Check the Door and Ash Pan door - THEY MUST BE CLOSED TIGHT.

✓See section 8 "The pellets will not light".

✓Check the fuse on the circuit board.

✓If the unit still does not start, contact your local service dealer for service.

2. The stove will not operate when hot.

✓Check the Heat Level Indicator if a fire is not detected, or if the fire has gone out **the #3 light will flash** because the Exhaust Temperature Sensor's contacts have opened.

✓Check the hopper for fuel.

✓Incorrect air damper setting. - Excessive air may consume the fire too quickly before the next drop of fuel, leaving completely unburned fuel in the burn pot liner. - - Insufficient air may cause the vacuum switch to open or will cause build up, further restricting the air flow through the Burn Pot Liner. This in turn will cause the fuel to burn cold and very slowly. Fuel may build up and smother the fire. In this case clean the burn pot. **(NOTE: unit may require a change to the vent system or installation of fresh air to correct Air to Fuel ratio problems if unable to achieve proper damper setting).**

✓Combustion Blower failure. - The Combustion Blower is not turning fast enough to generate the proper vacuum in the fire box. Visual Check – is the blower motor turning. See section "3. The Exhaust Blower will not function normally."

✓Poor Quality Fuel – Insufficient energy in the fuel to produce enough heat to keep the stove burning
✓Exhaust Temperature Sensor failure. – Bypass sensor located on Exhaust Blower, if stove now operates properly, the unit may require cleaning or a new sensor. Contact your local dealer for service.
✓Check the fuse on the circuit board.

3. The exhaust motor will not function normally.
✓Open the access panels; check all connections against the wiring diagram.
✓Check the Exhaust Blower voltage across the blower motor wires (>=115V on #5 setting and >= 75V on #1 setting). – Replace the Circuit Board if the Voltage reading is less than 75 V. with a line voltage of >115 V AC..
✓Clean all exhaust passages and venting.

4. Light # 3 on Heat output bar flashing
(The Exhaust Temp. Switch contacts have opened.)
✓Stove ran out of fuel - check fuel level in the hopper
✓Severe negative pressure in area where unit is installed - Check the operation by opening a window, does this solve the problem? If it does, install fresh air intake to unit or room. Venting system may require vertical section to move termination into a low pressure zone.
✓See sections #2 "Stove will not operate when hot", #3 "The Exhaust motor will not function normally" and #5 "Auger light flashes....turn at all." for more suggestions.

✓**To reset Circuit Board after a trouble code - push the ON/OFF button**

5. Auger light flashes but auger motor does not turn at all.
✓Check the Door and Ash Pan door - THEY MUST BE CLOSED TIGHT.
✓If the Auger gear box does not turn but the motor's armature does try to spin, then the auger is jammed. – Try to break apart jam by poking at the jam through the drop tube. If this fails then empty the hopper and remove the Auger Cover **Remember to re-seal the cover after installation**
✓Auger stopped running. Pinch, break or blockage in Vacuum Hose - Check hose for pinch points or damage, replace or re-route as required. Blow out Vacuum Hose
✓Damage to wires between Circuit Board and Vacuum Switch and Auger Motor - Inspect wires and connectors
✓Vacuum Switch failure - Bypass the vacuum switch, if this corrects the problem check for above problems before replacing the Vacuum Switch.
✓Blocked exhaust / venting system - Have stove and venting cleaned and inspected.
✓Check Vacuum levels at the Vacuum Switch, with a Magnahelic Gauge (readings must be above .07" W.C. on low fire).

6. The 200 °F (93 °C) high limit temperature sensor has tripped.
✓Reset sensor and determine cause – was it Convection Blower failure or Circuit board control problems.
✓Check the fuse on the circuit board.

Troubleshooting

7. The convection blower will not function normally.

✓Clean all grill openings at the back and below unit .

✓Check the Voltage across the blower wires, It should adjust with the heat output settings. If not contact your local dealer for service.

8. Ignitor- the pellets will not light.

✓Everything else in the stove operates but the ignitor will not light the pellets.

✓Make sure the burn pot liner is up tight and square to the ignitor tube by pushing the burn pot back against the ignitor tube.

✓Check to see if the exhaust blower is operating. If not, contact your local dealer for service.

✓Check the fuse on the circuit board.

NOTE: The ignitor should be bright orange in color.

9. Control settings (Heat Level) has no effect on the fire.

✓NOTE: If the system light is flashing the Control Board has complete control of the unit. When the units system light becomes solid then control of the unit is given back to the operator.

✓Check position of the Thermostat slide switch on the Circuit Board.

✓If there is no control of the Heat Level button make sure the thermostat is calling for heat.

✓Call your local dealer for service.

10. The stove keeps going out.

If the stove goes out and leaves fresh unburned pellets or cigarette-like ashes in the burn pot liner, the fire is going out before the stove shuts off.

✓Check to see that the Slider / Damper is in the correct position.

✓Turn the Heat Level up slightly (poor quality pellets will require slightly higher settings).

✓Set the auger trim till the #1 and #5 lights are illuminated.

If the stove goes out and there are partially burned pellets left in the burn pot liner, the stove has shut down due to a lack of air, exhaust temperature, or power failure.

✓Adjust the Slider / Damper.

✓Check to see if the stove needs a more complete cleaning.

✓Turn the Heat Level up slightly (poor quality pellets will require slightly higher settings).

✓Did the power go out?

✓Contact your local Dealer for service.

Wiring Diagram

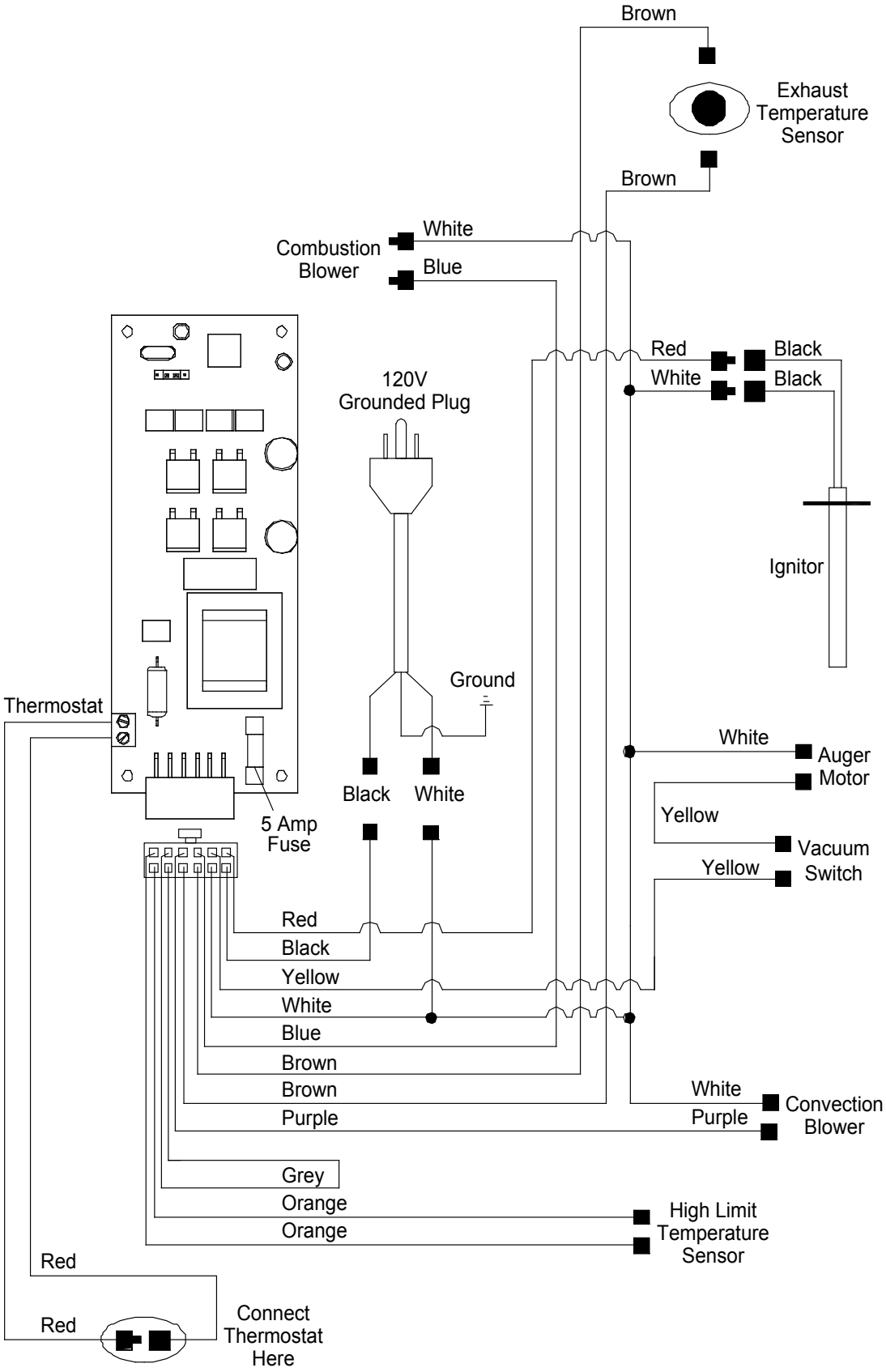

Parts List

Reference #	Description	Part #
1	120ºF (49ºC) Ceramic Fan Temp Sensor	EC-001
2	IEC Power Cord (115V)	EC-043
	Window Channel Tape - 6ft (1.8m)	EC-058
3	High Limit Temp Sensor 200ºF (93ºC) Manual Reset	EF-016
	Silicone Hose	EF-018
4	Slider Damper Rod with Knob	EF-050
5	Glass - Large (9" x 13" [229mm x 330mm])	EF-061
6	1" Knob	EF-068
7	Shoulder Bolt, Roller, & Nut (Set of 2)	EF-124
	Pellet Stove Cleaning Brush	EF-156
	Ash Pan Gasket - 10ft (3.0m)	EF-208
	Door Gasket ¾" Firm Round X 80" - 7ft (2.1m)	EF4i-056
8	IEC Power Cord Inlet Socket	50-713
9	Circuit Board 5 Amp Fuse 115V (Set of 2)	50-833
10	⅝" ID Auger Collar with Screw	50-968
11	Slider Damper Set Collar Kit	50-1068
12	Auger With Paddles	50-1161
	Burn Pot Scraper Tool	50-1254
13	Leveling Legs 1½" (Set of 4)	50-1342
14	Vacuum Switch Low Pressure	50-1390
	Auger Tube Cover	50-1410
15	4" Exhaust - Starter Tube Gasket	50-1913
	Control Panel Decal	50-1482
	600 Watts Backup System	50-1547
16	Auger Stops (Clear Rubber)	50-1559
17	Hopper Lid Hinge - Left	50-1633
18	Hopper Lid Hinge - Right	50-1634
19	Hopper Lid	50-1635
20	Heat Exchanger Rod	50-1638
21	Back Grill - Top	50-1639
22	Back Grill - Bottom	50-1640
23	Slider Damper Plate	50-1644

Parts List

Reference #	Description	Part #
24	Firebox Baffle	50-1645
25	Ash Pan	50-1646
26	Glass Retainer	50-1649
27	Inner Door (No Glass)	50-1651
28	Control Panel with Decal	50-1654
29	Circuit Board	50-1655
30	Ignitor Assembly	50-1656
31	Auger Motor - 3rpm 120V	50-1657
32	Auger Plate And Bushing (Assembly)	50-1658
33	Convection Blower	50-1659
34	Combustion Blower (Assembly)	50-1660
35	Burn Pot	50-1661
36	Burn Pot Liner	50-1662
37	4” Exhaust - Starter Tube with Flange; 5” Long	50-1914
38	Combustion Blower Motor Mounting Gasket	50-1664
	Circuit Board Wiring Harness	50-1666
39	Auger Brass Bushings (Set Of 2)	50-1806
40	Door	50-1851
41	Trivet	50-1852
42	Top Front with Mount	50-1853
43	Cabinet Side - Left	50-1854
44	Cabinet Side - Right	50-1855
45	Louver Assembly	50-1856
46	Front Trim Panel	50-1857
47	Ash Pan Door	50-1858
48	Ash Shelf	50-1859
49	Door Handle - Upper	50-1860
50	Door Handle - Lower	50-1861
51	Hearth Shield	50-1862
	VF170 Domestic Owners Manual	50-1863
	VF170 Domestic Technical Manual	50-1864

Parts Diagram - Components

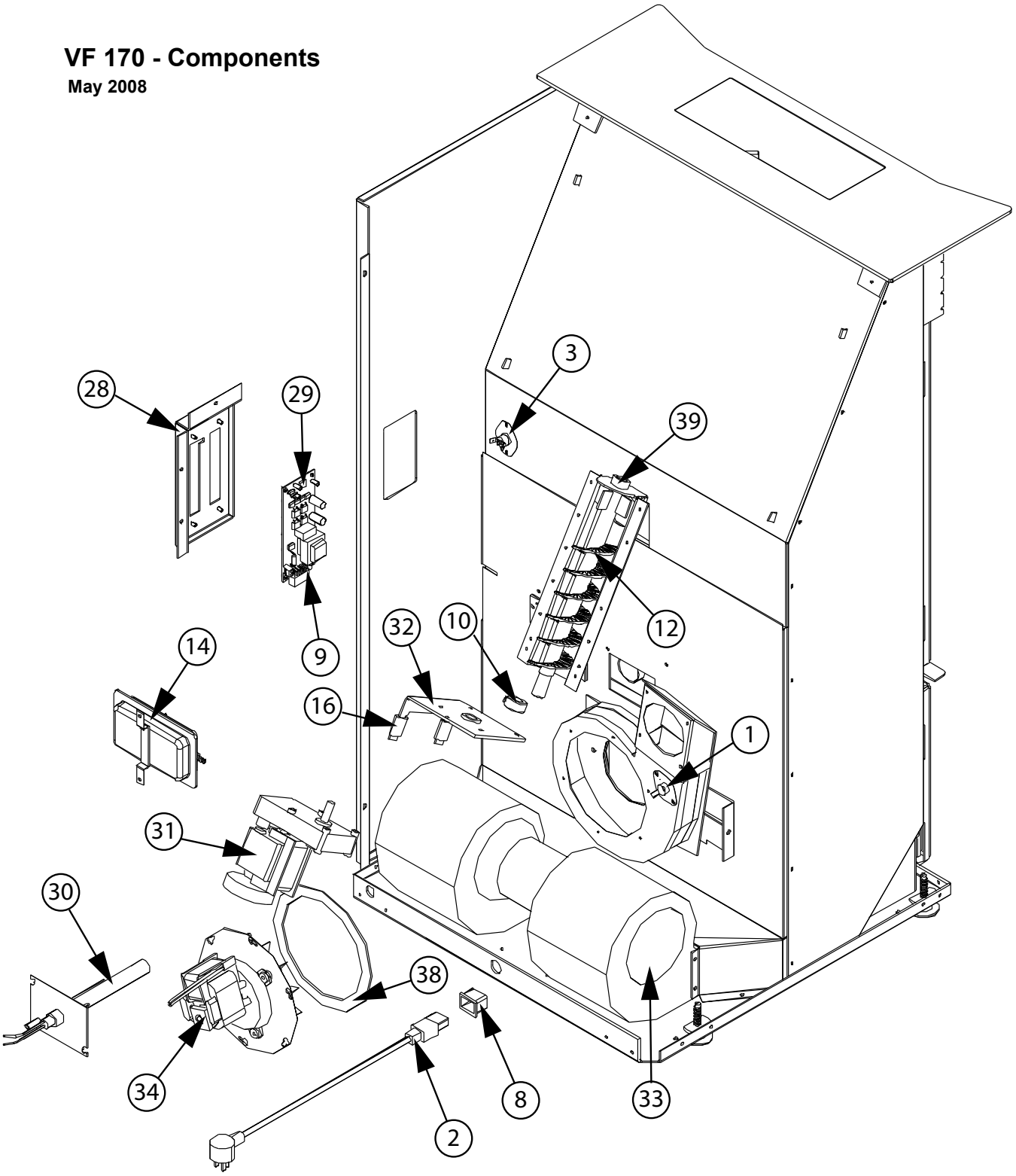

Parts Diagram - Steel

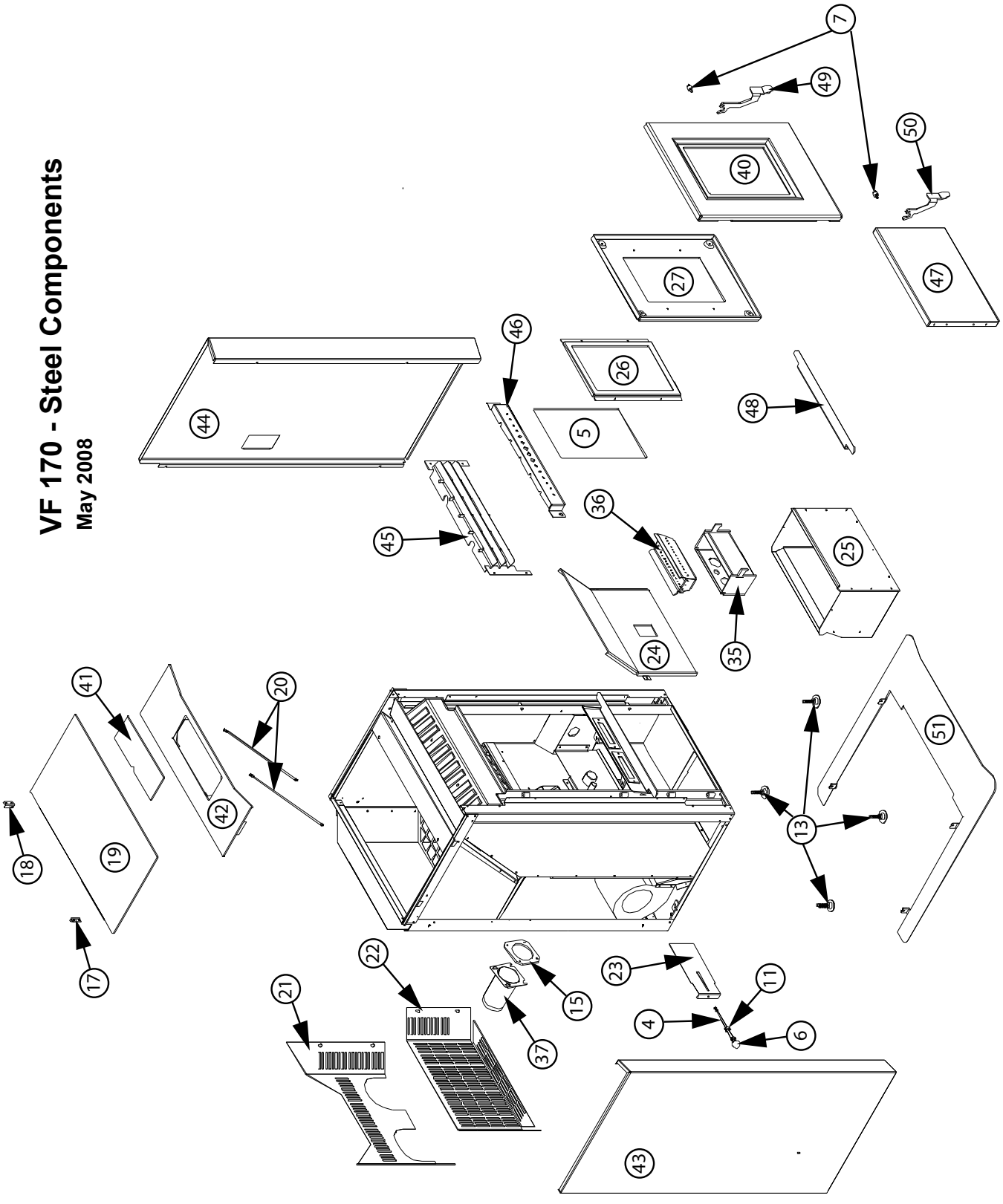

Warranty

Sherwood Industries Ltd. is the manufacturer of the Vista Flame line of heating products. At Sherwood Industries, our commitment to the highest level of quality and customer service is the most important thing we do. Each Vista Flame stove is built on a tradition of using only the finest materials and is backed by our Exclusive Lifetime Limited Warranty to the original purchaser. With Enviro, you're not just buying a stove, you're buying a company with years of unequalled performance and quality.

Limited Lifetime Warranty:
Under this warranty, Sherwood Industries Ltd. covers the fireplace or stove body and accessories against defects in materials and workmanship, for part repair or replacement for the first seven (7) years and limited labour for the first two (2) years to the original purchaser. This Warranty covers: Firebox, Heat Exchanger, Burn Pot, Firebox Panels, Ceramic Glass, Pedestals, Panels, Legs, Log Sets and Door Assembly. Please see the exclusions and limitation section below as certain restrictions and exclusions apply to this warranty.

Limited Three (3) Year Warranty
Under this warranty, Sherwood Industries Ltd. covers the Burn Pot Liner against defects in materials and workmanship, for part repair or replacement for the first three (3) years and limited labour for the first two (2) years to the original purchaser. Please see the exclusions and limitation section below as certain restrictions and exclusions apply to this warranty.

Limited Two (2) Year Warranty:
Under this warranty, Sherwood Industries Ltd. covers: Ignitor, Auger Motor, Circuit Board, Timers, Temp Sensors, Blowers, Vacuum Switch and Wire Harness, against defects in materials and workmanship, for part repair or replacement for the first two (2) years and limited labour for the first two (2) years to the original purchaser. Please see the exclusions and limitation section below as certain restrictions and exclusions apply to this warranty.

Limited One (1) Year Warranty:
Under this warranty, Sherwood Industries Ltd. covers all exterior surface finishes against defects in materials and workmanship, for part repair or replacement and limited labour for the first (1) year to the original purchaser. Please see the exclusions and limitation section below as certain restrictions and exclusions apply to this warranty.

Here is how our Warranty works
If you have any concerns with your Vista Flame product please contact the dealer where you purchased the fireplace or stove. Your dealer shall make all claims under this warranty in writing.

To the Dealer
When filling out a warranty claim please complete the following information on an official warranty claim form:

Customer information: Name, address and telephone number of purchaser and date of purchase.

Dealer information: Date of installation, name of installer and dealer, serial number of the appliance, nature of complaint, defects or malfunction, description and part numbers of any parts replaced.

To the Distributor
Sign and verify that work and information are correct.

Warranty

Exclusions and Limitations:

1. This Warranty does not cover tarnish, discoloration or wear on the plating or paint.
2. This Warranty excludes wear and tear or breakage caused by cleaning, moving or service on log set.
3. A qualified installer must install this stove or fireplace. This Limited Warranty covers defects in materials and workmanship only if the product has been installed in accordance with local building and fire codes; in their absence, refer to the owner's manual. If the product is damaged or broken as a result of any alteration, willful abuse, mishandling, accident, neglect, or misuse of the product, the Limited Warranty does not apply.
4. The stove must be operated and maintained at all times in accordance with the instructions in the Owner's Manual. If the unit shows signs of neglect or misuse, it is not covered under the terms of this Warranty policy. Performance problems due to operator error will not be covered by the Limited Warranty policy.
5. As this is a heating appliance some changes in colour of surface finishes may occur. This is not a flaw and as such is not covered under this warranty.
6. Some minor expansion, contraction, or movement of certain parts and resulting noise, is normal and not a defect and, therefore, is not covered under this Limited Warranty.
7. Misuse includes over-firing. Over-firing this appliance can cause serious damage and will nullify the Limited Warranty.
8. The Limited Warranty will cover glass thermal breakage only and will not cover misuse of the stove glass, including but not limited to glass that is struck, has surface contaminates or has had harsh or abrasive cleaners used on it.
9. This warranty does not cover products made or provided by other manufacturers and used in conjunction with the operation of this stove without prior authorization from Sherwood Industries Ltd. The use of such products may nullify the Limited Warranty on this stove. If unsure as to the extent of this Limited Warranty, contact your authorized Vista Flame dealer before installation.
10. Sherwood Industries Ltd. will not be responsible for inadequate performance caused by environmental conditions.
11. The Limited Warranty does not cover installation and operational related problems such as spillage caused by environmental conditions. Environmental conditions include but are not limited to nearby trees, buildings, roof tops, wind, hills, mountains, inadequate venting or ventilation, excessive offsets, negative air pressures or other influences caused by mechanical systems such as furnaces, fans, clothes dryers etc.
12. The Limited Warranty is void if:
    a) The stove has been operated in atmospheres contaminated by chlorine, fluorine or other damaging chemicals.
    b) The stove is subject to submersion in water or prolonged periods of dampness or condensation.
    c) Any damage to the unit, combustion chamber or other components due to water, or weather damage which is the result of, but not limited to, improper chimney/venting installation.
    c) Salt air in coastal areas or high humidity can be corrosive to the finish; these environments can cause rusting. Damage caused by salt air or high humidity is not covered by the Limited Warranty.
13. Exclusions to the Limited Warranty include: injury, loss of use, damage, failure to function due to accident, negligence, misuse, improper installation, alteration or adjustment of the manufacturer's settings of components, lack of proper and regular maintenance, alteration, or act of God.
14. The Limited Warranty does not cover damage caused to the fireplace or stove while in transit. If this occurs, do not operate the stove and contact your courier and/or dealer.
15. The Limited Warranty does not extend to or include firebox paint, door or glass gaskets with damage caused by normal wear and tear, or exterior paint discoloration or chipping, worn gaskets, etc.
16. The Limited Warranty does not include damage to the unit caused by abuse, improper installation, or modification of the unit.

17. Damage to plated surfaces caused by fingerprints, scratches, melted items, or other external scores and residues left on the plated surfaces from the use of abrasive cleaners or polishes is not covered in this warranty.
18. The Limited Warranty does not cover tarnish, discoloration or wear on the plated surfaces.
19. The paint on the Metal Brick Liner may peel. This is due to the extreme conditions applied to the paint during normal usage. It is not a flaw and is not covered under warranty.
20. Sherwood Industries Ltd. is free of liability for any damages caused by the fireplace or stove, as well as inconvenience expenses and materials. The Limited Warranty does not cover incidental or consequential damages.
21. The Limited Warranty does not cover any loss or damage incurred by the use or removal of any component or apparatus to or from the Vista Flame fireplace or stove without the express written permission of Sherwood Industries Ltd. and bearing a Sherwood Industries Ltd. label of approval.
22. Any statement or representation of Vista Flame products and their performance contained in Vista Flame advertising, packaging literature, or printed material is not part of the Limited Warranty.
23. The Limited Warranty is automatically voided if the fireplace or stove's serial number has been removed or altered in any way. If the stove is used for commercial purposes, it is excluded from the Limited Warranty.
24. No dealer, distributor, or similar person has the authority to represent or warrant Vista Flame products beyond the terms contained within the Limited Warranty. Sherwood Industries Ltd. assumes no liability for such warranties or representations.
25. Sherwood Industries Ltd. will not cover the cost of the removal or re-installation of the stove, hearth, facing, mantels, venting or other components.
26. Labour to replace or repair items under this Limited Warranty will be covered per our warranty service fee reimbursement schedule. Labour rates are set per component and as such total labour costs may not be covered.
27. Sherwood Industries Ltd. is not liable for freight or labour on any stove replaced in-field and is not liable for travel costs for service work. In the event of in-home repair work, the customer will pay any in-home travel fees or service charges required by the Authorized Dealer.
28. At no time will Sherwood Industries Ltd. be liable for any consequential damages which exceed the purchase price of the unit. Sherwood Industries Ltd. has no obligation to enhance or modify any stove once manufactured (example: as a stove evolves, field modifications or upgrades will not be performed).
29. This Limited Warranty is applicable only to the original purchaser and it is non-transferable.
30. This warranty only covers Vista Flame products that are purchased through an authorized Vista Flame dealer.
31. If for any reason any section of the Limited Warranty is declared invalid, the balance of the warranty remains in effect and all other clauses shall remain in effect.
32. The Limited Warranty is the only warranty supplied by Sherwood Industries Ltd., the manufacturer of the stove. All other warranties, whether express or implied, are hereby expressly disclaimed and purchaser's recourse is expressly limited to the Limited Warranty.
33. Sherwood Industries Ltd. and its employees or representatives will not assume any damages, either directly or indirectly, caused by improper usage, operation, installation, servicing or maintenance of this stove.
34. Sherwood Industries Ltd. reserves the right to make changes without notice. Please complete and mail the warranty registration card and have the installer fill in the installation data sheet in the back of the manual for warranty and future reference.
35. Sherwood Industries Ltd. is responsible for stocking parts for a maximum of seven (7) years after discontinuing the manufacture or incorporation of the item into its products. An exception to this would be if an OEM supplier is not able to supply a part.

Installation Data Sheet

The following information must be recorded by the installer for warranty purposes and future reference.

NAME OF OWNER:

_____

ADDRESS:

_____

_____

_____

PHONE:_____

NAME OF DEALER:

_____

ADDRESS:

_____

_____

_____

PHONE:_____

MODEL:_____

SERIAL NUMBER:_____

DATE OF PURCHASE: _____ (dd/mm/yyyy)

DATE OF INSTALLATION:_____(dd/mm/yyyy)

MAGNEHELIC AT INSTALL:_____

INSTALLER'S SIGNATURE:

_____

NAME OF INSTALLER:

_____

ADDRESS:

_____

_____

_____

PHONE:_____

MANUFACTURED BY:
SHERWOOD INDUSTRIES LTD.
6782 OLDFIELD RD. SAANICHTON, BC, CANADA V8M 2A3
July 21, 2008
C-11633