SHERWOOD INDUSTRIES IS AN ENVIRONMENTALLY RESPONSIBLE COMPANY. THIS MANUAL IS PRINTED ON RECYCLED PAPER.

PLEASE KEEP THESE INSTRUCTIONS FOR FUTURE REFERENCE

DV48

BY: SHERWOOD INDUSTRIES LTD

Westgate

LUXURY FIREPLACES

OWNER'S MANUAL

INSTALLER:
Leave this manual with the appliance.

CONSUMER:
Retain this manual for future reference.



WHAT TO DO IF YOU SMELL GAS

- **Open windows/extinguish any open flame.**
- **Do not try to light any appliance.**
- **Do not touch any electrical switch or use any phone in your building.**
- **Immediately call your gas supplier from a neighbour's phone. Follow the gas supplier's instructions.**
- **If you cannot reach your gas supplier, call the fire department.**

FOR YOUR SAFETY: Do not store or use gasoline or other flammable vapours and liquids in the vicinity of this or any other appliance.

WARNING: If the information in this manual is not followed exactly, a fire or explosion may result causing property damage, personal injury or loss of life. Installation and service must be performed by a qualified installer, service agency or the gas supplier.

This appliance may be installed in an after-market permanently located, manufactured (mobile) home, where not prohibited by local codes.

This appliance is only for use with the type of gas indicated on the rating plate. This appliance is not convertible for use with other gases, unless a certified kit is used.

INTERTEK C Warnock Hersey US

Massachusetts installations (Warning): This product must be installed by a licensed plumber or gas fitter when installed within the Commonwealth of Massachusetts. Other Massachusetts code requirements: Flexible connector must not be longer than 36in., a shut off valve must be installed; only direct vent sealed combustion products are approved for bedrooms/bathrooms. A carbon monoxide detector is required in all rooms containing gas fired direct vent appliances. The fireplace damper must be removed or welded in the open position prior to installation of a fireplace insert.

Safety Precautions

FOR SAFE INSTALLATION AND OPERATION OF YOUR "WESTGATE" HEATER, PLEASE CAREFULLY READ THE FOLLOWING INFORMATION:

- All Westgate gas-fired appliances must be installed in accordance with their instructions. Carefully read all the instructions in this manual first. Consult the building authority having jurisdiction to determine the need for a permit prior to commencing the installation.
- **NOTE:** Failure to follow these instructions could cause a malfunction of the fireplace, which could result in death, serious bodily injury, and/or property damage.
- Failure to follow these instructions may also void your fire insurance and/or warranty.

GENERAL

- Installation and repair should be done by a qualified service person. The appliance should be inspected before the first use and, at least, annually by a qualified service person. More frequent cleaning may be required due to excessive lint from carpeting, bedding material, etc. It is imperative the control compartments, burners and circulating air passageways of the appliance be kept clean.
- Due to high temperatures, the appliance should be located out of high traffic areas and away from furniture and draperies.

Children and adults should be alerted to the hazards of high surface temperatures and should stay away to avoid burn or clothing ignition.

- Young children should be carefully supervised when in the same room as the appliance.
- Clothing or other flammable materials should not be placed on or near the appliance.

FOR YOUR SAFETY

- Installation and service must be performed by a qualified installer, service agency or gas supplier.
- This installation must conform to local codes or, in the absence of local codes, to the current CAN/CGA-B149 installation code (Canada) or National Fuel Gas Code ANSI Z223.1.2 (USA)
- To prevent injury, do not allow anyone who is unfamiliar with the stove to operate it.
- **To prevent injury, if the pilot or pilot and burners have gone out on their own, open the glass door and wait 5 minutes to air out before attempting to re-light the stove.**
- Always keep the area around these appliances clear of combustible material, gasoline and other flammable liquids and vapours.
- These appliances should not be used as a drying rack for clothing or for hanging Christmas stockings/decorations.
- Due to the paint curing on the stove, a faint odor and slight smoking will likely be noticed when the stove is first used. Open a window until the smoking stops.

Always connect this gas stove to a vent system and vent to the outside of the building envelope. Never vent to another room or inside the building. Make sure the specified vent pipe is used, properly sized and of adequate height to provide sufficient draft. Inspect the venting system annually for blockage and signs of deterioration.

WARNING: Failure to position the parts in accordance with the diagrams in this booklet, or failure to use only parts specifically approved with this appliance, may result in property damage or personal injury.

WARNING: Do not operate with the glass front removed, cracked or broken. Replacement of the glass should be done by a licensed or qualified service person.

- Never use solid fuels such as wood, paper, cardboard, coal, or any flammable liquids, etc., in this appliance.
- Do not use this heater if any part has been under water. Immediately call a qualified service technician to inspect the heater and to replace any part of the control or gas control systems that have been under water.
- Do not abuse the glass by striking it or slamming the door shut.

Table of Contents

Safety Precautions....2
Table of Contents....3
Codes And Approvals....5
Specifications....6
- Dimensions....6
- Rating Label Location....6
- Rating Label....7

Planning Your Installation....8
- Introduction....8
- Non-Combustible Material Zone....8
- Typical Framing - Internal Chase....9
- Typical Framing - External Chase....10
- Typical Framing - Corner....11
- Typical Framing - Sidewall and Mantel....12
- Typical Framing - Raised Hearth....13
- Installation of Fireplace Facing....14
- Installation of Optional Facing Trim....15
- Installation of Receiver....16
- Allowable Vent Configurations....16
- Vent Termination Restrictions....18
- Approved Vent Parts....19
- Installation of Flue Restrictor....20
- TV Installation Above Unit....21

Installation Set-Up....22
- Planning Your Installation....22
- Assembly of the Unit....22
- Securing unit into Position....22
- Installation Of Non-combustible Wall And Hearth Board....23
- Installation Of Venting And Terminations....23
- Horizontal Installation....24
- Vertical Termination Installation....26
- Door Removal and Installation....28
- Electrical Hook-Up....29
- Gas Hook-Up....30
- LP Gas Conversion....30
- Firebox Liner Installation....32
- Log Burner / Ember Bed Installation....34
- Log Set Installation....35
- Glass Burner Installation....37
- Porcelain Panel Kit Installation....39
- Optional Front Installation....41

Table of Contents

Start-Up & Operation.....43
- Normal Sounds During Operation.....43
- Remote Control Operations.....43
- Technical Data.....43
- System Description.....44
- Wall Mounting The Receiver.....45
- Operating Procedure.....45
- Air Shutter Adjustment.....48
- Check for Proper Burner Flame.....49

Service / Maintenance.....50
- Lighting Instruction Label.....50
- Light Bulb Replacement.....51
- Cleaning / Annual Service.....51
- Cleaning The Glass.....51
- Replacing Glass.....51

Wiring Harness.....52

Troubleshooting.....53

Parts List.....55

Parts Diagram.....56

Warranty.....57

Notes.....59

Installation Data Sheet.....60

Codes And Approvals

DIRECT VENT ONLY: This type is identified by the prefix DV. This appliance draws all of its air for combustion from outside the dwelling, through a specially designed vent pipe system.

This appliance has been tested and approved for installations from 0 feet to 4500 feet (1372 m) above sea level.

In the USA: The appliance may be installed at higher altitudes. Please refer to your American Gas Association guidelines which state: the sea level rated input of Gas Designed Appliances installed at elevations above 2000 (610 m) feet is to be reduced 4% for each 1000 feet (305 m) above sea level. Refer also to local authorities or codes which have jurisdiction in your area regarding the de-rate guidelines.

In Canada: When the appliance is installed at elevations above 4500 feet (1372 m), the certified high altitude rating shall be reduced at the rate of 4% for each additional 1000 feet (305 m).

- This appliance has been tested by INTERTEK (**Warnock Hersey**) and found to comply with the established VENTED GAS FIREPLACE HEATER standards in CANADA and the USA as follows:

VENTED GAS FIREPLACE HEATER (DV48; NG/LPG)

TESTED TO: ANSI Z21.88a-2007/CSA 2.33a-2007 VENTED GAS FIREPLACE HEATERS

CAN/CGA 2.17-M91 GAS FIRED APPLIANCES FOR HIGH ALTITUDES

CSA P.4.1-02 TESTING METHOD FOR MEASURING ANNUAL FIREPLACE EFFICIENCY

This Westgate DV48 Fireplace:

- Has been certified for use with either natural or propane gases. (See rating label.)
- Is not for use with solid fuels.
- Is approved for bedroom or bed sitting room. (**IN CANADA**: must be installed with a listed wall thermostat. **IN USA**: see current ANSI Z223.1 for installation instructions.)
- Must be installed in accordance with local codes. If none exist, use current installation code CAN/CGA B149 in Canada or ANSI Z223.1/NFPA 54 in the USA.
- Must be properly connected to an approved venting system and not connected to a chimney flue serving a separate solid-fuel burning appliance.

IMPORTANT NOTICE (Regarding first fire up): When the unit is turned on for the first time, it should be turned onto high without the fan on for the first 4 hours. This will cure the paint, logs, gasket material and other products used in the manufacturing process. It is advisable to open a window or door, as the unit will start to smoke and can irritate some people. After the unit has gone through the first burn, turn the unit off including the pilot, let the unit get cold then remove the glass door and clean it with a good gas fireplace glass cleaner, available at your local WESTGATE dealer.

NATIONAL FIREPLACE INSTITUTE®

NFI

CERTIFIED

www.nficertified.org

We recommend that our gas hearth products be installed and serviced by professionals who are certified in the U.S. by the National Fireplace Institute® (NFI) as NFI Gas Specialists.

SPECIFICATIONS

DIMENSIONS:

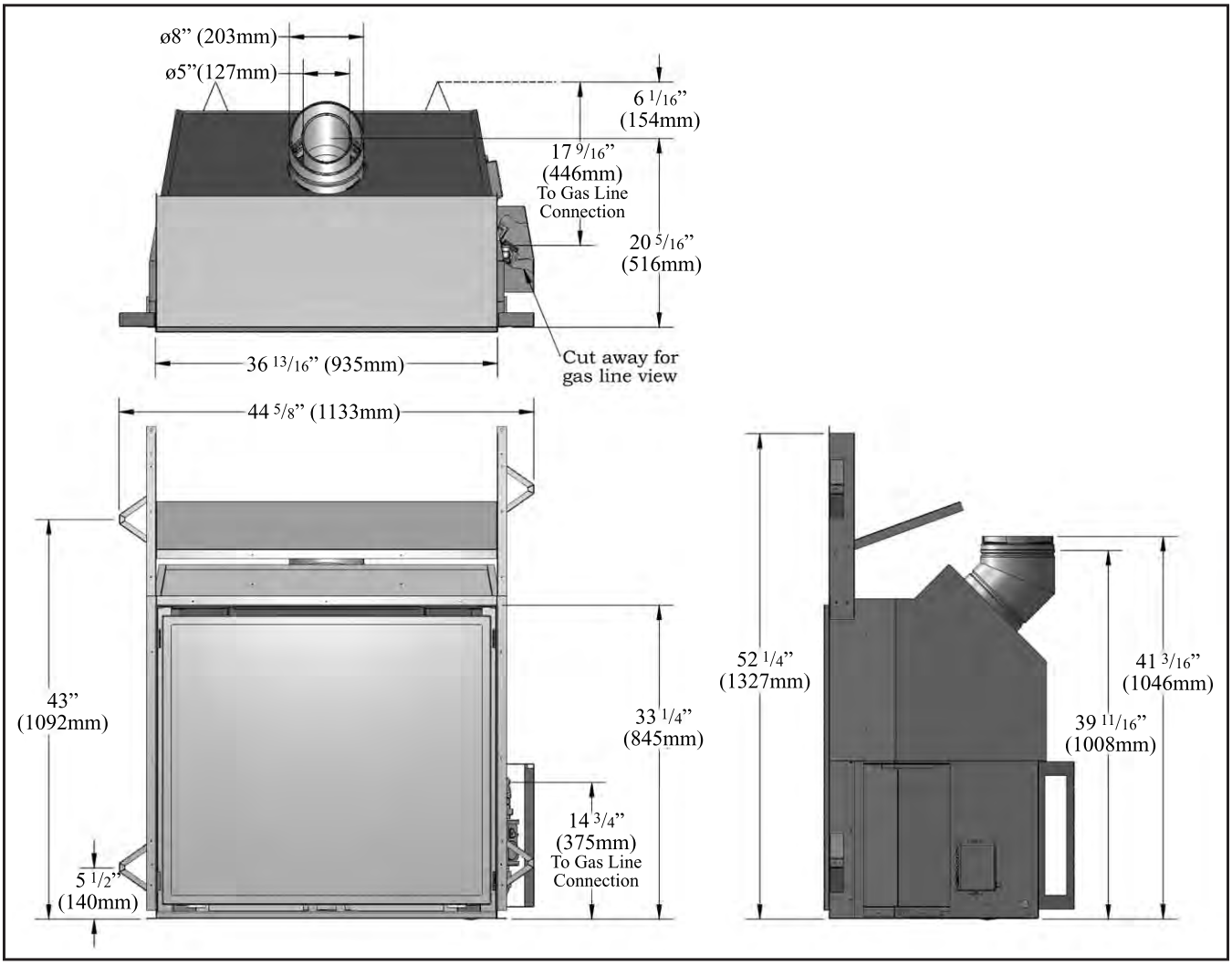

Figure 1. Dimensions of the Firebox.

RATING LABEL LOCATION:

The Rating and Lighting instruction label is located below the door frame, underneath the firebox attached to a chain. To access the label, slide the plate forward out from under the firebox. Always return it when finished.

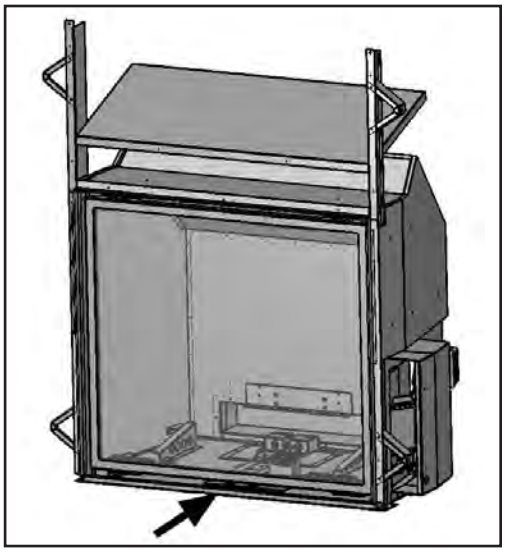

Figure 2. Rating/Lighting Label Location.

SPECIFICATIONS

RATING LABEL:

DO NOT REMOVE THIS LABEL / N'ENLEVEZ PAS CETTE ETIQUETTE

WH- **DV48**

Westgate

INTERTEK Warnock Hersey C US

Certified for use in Canada & USA
Certifié pour installation au Canada et aux Etats-Unis.

VENTED GAS FIREPLACE HEATER ENVIRO MODEL:
FOYER AU GAZ A EVACUATION MODELE ENVIRO: DV48

NAT: (Gaz naturel) ☐ LPG (Propane) ☐

WH# 16354

TESTED TO / TESTÉE SELON LES NORMES:
ANSI Z21.88a-2007/CSA 2.33a-2007 VENTED GAS FIREPLACE HEATERS / FOYER AU GAZ EVACUATION;
CAN/CGA 2.17-M91 GAS FIRED APPLIANCES FOR HIGH ALTITUDES / LES APPAREILS BRULANT GAZ POUR UTILISATION EN HAUTES ALTITUDES; Can/CSA P.4.1-02 (R2006) TESTING METHOD FOR MEASURING ANNUAL FIREPLACE EFFICIENCY / LA METHODE D'ESSAI POUR MESURER L'EFFICACITE DE CHEMINEE ANNUELLE.

INPUT (ENTRÉE): NAT: 0-4500 FT (1372 M) MAX: 48,000 BTU (14.07 KW•h)
MIN: 16,000 BTU (4.68 KW•h)
LPG: 0-4500 FT (1372 M) MAX: 48,000 BTU (14.07 KW•h)
MIN: 17,000 BTU (4.98 KW•h)

MANIFOLD PRESSURE (PRESSION D'ADMISSION):
NAT: 3.5 in. WC (0.87kPa) / 1.6 in. WC (0.40kPa) LPG: 10 in. WC (2.48kPa) / 6.4 in. WC (1.59kPa)

MINIMUM GAS SUPPLY PRESSURE: (PRESSION MINIMALE D'ALIMENTATION DE GAZ PERMISE)
NAT: 5 in. Wc (1.24kPa) LPG: 12 in. Wc (2.98kPa)

ORIFICE SIZE: (DIMENSIONS DE L'ORIFICE)
NAT: Left # 45 DMS, Right # 41 DMS LPG: Left # 55 DMS, Right # 53 DMS

PILOT ORIFICE SIZE: (DIMENSIONS DE PILOTER L'ORIFICE)
NAT: # 62 DMS LPG: Left # 35 DMS

ELECTRICAL RATING:(EXIGENCES ÉLECTRIQUES)
Fan type circulator (Ventilateur circulaire) : 120 volts AC 60 hz / Less than 7 Amperes

CLEARANCES TO COMBUSTIBLES: (DISTANCE OBLIGATOIRE DES COMBUSTIBLES)
Stove side (Côté de poêle): 4 inches (10.2cm), Back (Arriére): 4 inches (10.2cm), Ceiling from bottom of unit (Du fond d'unité au Plafond): 80" inches (203.2cm), From fireplace frame to side wall (Du frome de la cheminée au mur latéral): 10" (25.5 cm), From base of the unit to shelf, header, or 12" (30.5cm) mantel (De la base de l'unité à une étagère, un en-tête, ou un 12" manteau de cheminée): 52.25" (133cm)

VENT PIPE CLEARANCES:(ESPACES LIBRES DE VENTILATION) See manufacturer's listing, label and installation instructions. Verifeez l'identifaction, l'etiquette et les instructionsd'installation du fabricant.

VENTED GAS FIREPLACE HEATER - NOT FOR USE WITH SOLID FUELS. MAY BE INSTALLED IN BEDROOM OR BEDSITTING ROOM (IN CANADA with a listed wall thermostat). THIS APPLIANCE MUST BE PROPERLY CONNECTED TO A VENTING SYSTEM. ONLY FOR DIRECT DISCHARGE WITHOUT DUCT CONNECTION. This appliance must be installed as per manufacturers installation instructions and in accordance with local codes if any. If none exist, use current installation code CAN/CGA B149 in Canada or ANSI Z223.1/NFPA 54 in the USA. This vented gas fireplace is not for use with air filters. FOR USE WITH FRONTS CERTIFIED WITH THIS APPLIANCE ONLY - NOT FOR USE WITH GLASS DOORS. This appliance is only for use with the type(s) of gas indicated on the rating plate. A conversion kit is available for this appliance. This appliance is not convertible for use with other gases, unless a certified kit is used. Sections of the venting system have not been installed. WARNING: Do not operate the appliance until all sections have been assembled and installed in accordance with the manufacturers instructions.

FOYER AU GAZ A EVACUATION - NE PAS EMPLOYER AVEC DES COMBUSTIBLES SOLIDES. Cet appareil peut être installé dans une chambre à coucher ou un studio. Cet appareil doit être branché correctement à un système de conduits. Uniquement pour l'échappement direct sans raccord de conduit.Cet appareil doit être installé selon les directives d'installation du manufacturier et selon les codes locaux, s'il y a lieu. Autrement, employez le code d'installation en vigueur au Canada CAN/CGA B149. Ne pas utilliser de filtre a air avec ce foyer au gaz a evacuation. POUR L'USAGE AVEC LES DEVANTS CERTIFIES AVEC CET APPAREIL SEULEMENT - PAS POUR L'USAGE AVEC PORTES VITREES. Cet apperareil doit etre utilise uniquement avec le type de gaz indique sur la plaque. Cet appareil ne peut etre converti a d'autres gaz sauf si une trouse de conversion certifee est utilisee. ADVERTISSEMENT: Ne pas utiliser l'appareil tant que toutes les sections n'ont pas ete assemblees et installees selon les instructions du fabricant.

MOBILE HOME: May be installed in an aftermarket, permanently located, manufactured home (USA only) or mobile home, where not prohibited by local codes. See owner's manual for details. This appliance must be installed in accordance with the current Standard for Mobile Homes, CAN/CSA Z240, or the Manufactured Home Construction and Safety Standard, Title 24 CFR, Part 3280, or when such standard is not applicable, the current Standard for Fire Safety Criteria for Manufactured Home Installations, sites, and Communitties, ANSI/NFPA 501A.

LA MAISON MOBILE : Peut être installé dans une maison mobile. Cet appareil doit être installé conformement aux Normes actuelles pour Maisons Mobiles, le BOITE/CSA Z240, ou les Normes de Construction et de Sureté des Maisons Pré-fabriquées (Titre 24 CFR, la Partie 3280). Quand ces Normes ne sont pas en vigueur, il faut suivre les criteres pour la sureté (contre les increndies) et pour la construction des Maisons Pré-fabriquées, leurs sites, ANSI/NFPA 501A, et des communautées aux Instructions du manufacturier.

MANUFACTURED BY (FABRIQUE PAR) : SHERWOOD INDUSTRIES LTD. 6782 OLDFIELD RD. SAANICHTON, BC,

DUE TO HIGH SURFACE TEMPERATURES KEEP CHILDREN, CLOTHING, AND FURNITURE AWAY
DUES AUX TEMPERATURES ELEVEES, GARDEZ LES ENFANTS, LES VETEMENT ET LES MEUBLES ELOIGNES

DATE OF MANUFACTURE: DATE DE FABRICATION:

J F M A M J J A S O N D 2009 2010 2011 2012

Figure 3. Rating Label.

SAMPLE

Planning Your Installation

Introduction:

This section of the owner's manual is for the use of qualified technicians only. Fireplace placement, hearths, facings, mantles, and venting terminations will be covered, as well as the gas and electric systems. There are several installation safety guidelines that must be adhered to. Please carefully read the safety precautions at the front of this manual.

Warning: Clearances must be sufficient to allow access for maintenance and service.

Non-Combustible Material Zone:

This installation guide will show you many options for installing your new DV48. Some options include external chases, internal chases, rock facing and corner installations. No matter what direction your installation takes, this illustrations shows an area where no combustible building products may go. This illustration applies to any and all installations for the DV48 and should be used as the first reference before any others. Failure to comply with this requirement can lead to elevated operating temperatures, degradation of materials or even result in fire. If you are un-clear about any details contained here, consult with your retailer prior to installation.

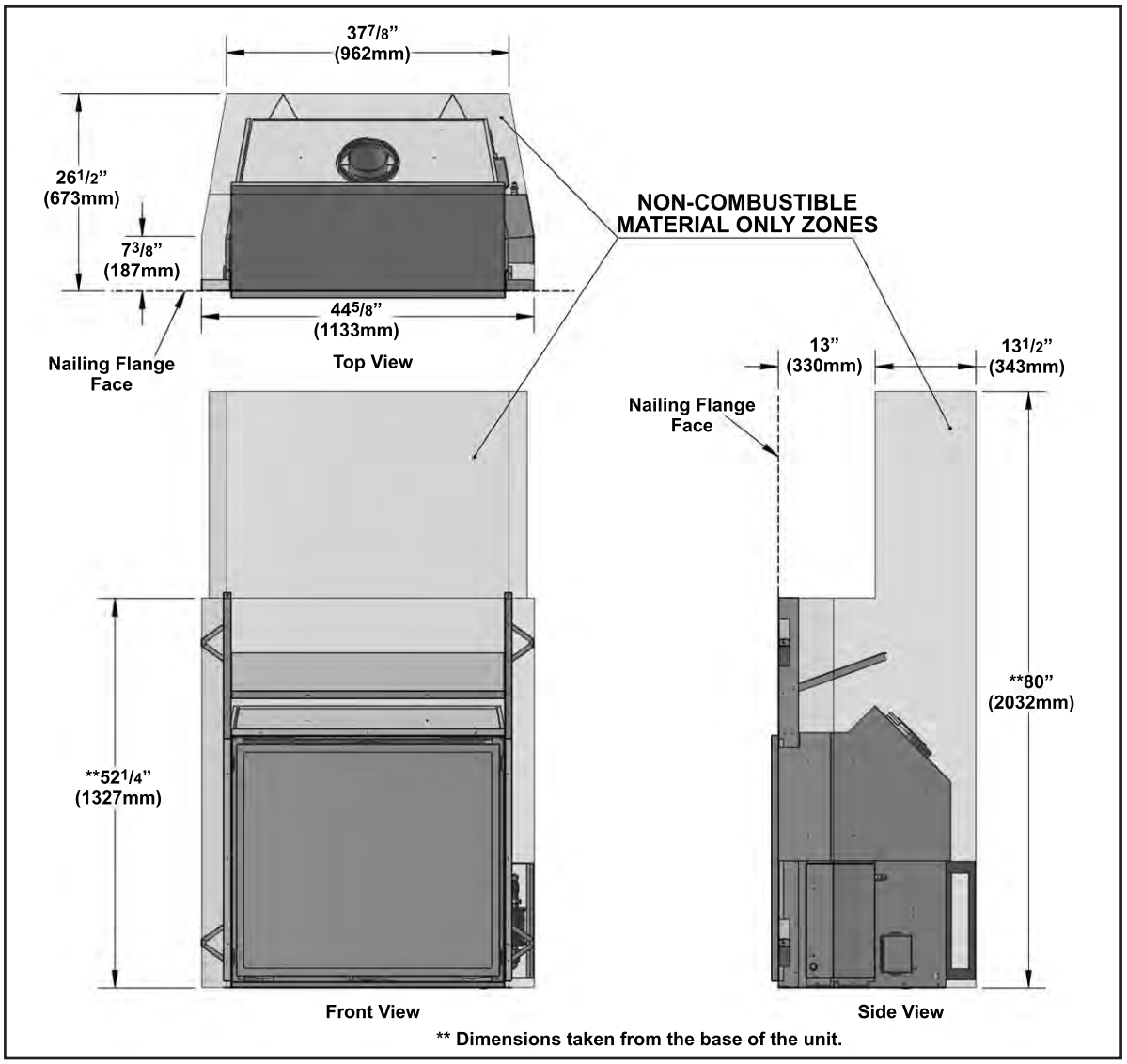

Figure 4. Non-Combustible Material Zone.

TYPICAL FRAMING - INTERNAL CHASE:

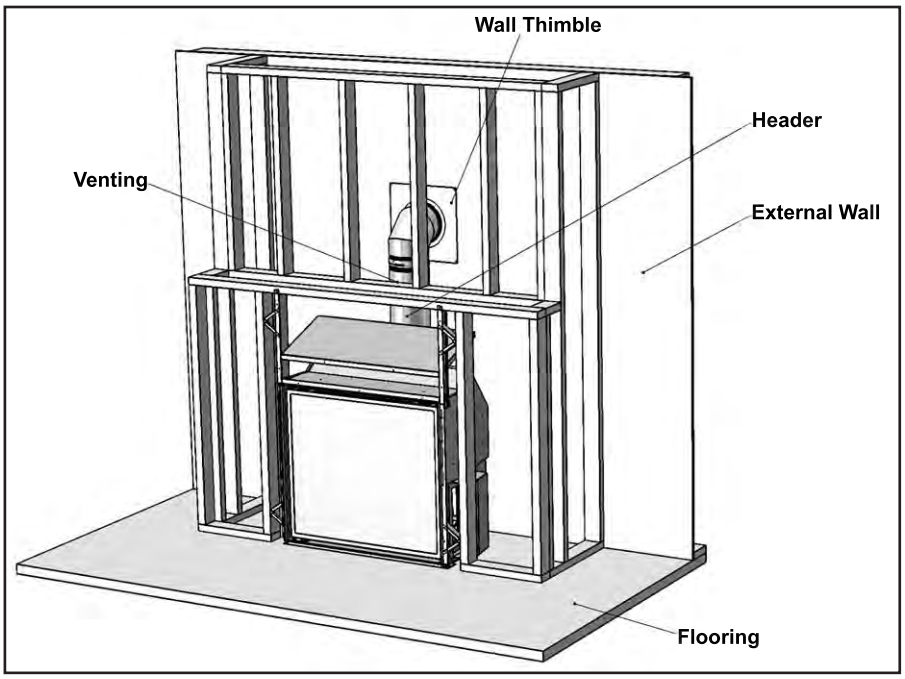

Figure 5. Typical Framing for Internal Chase - General.

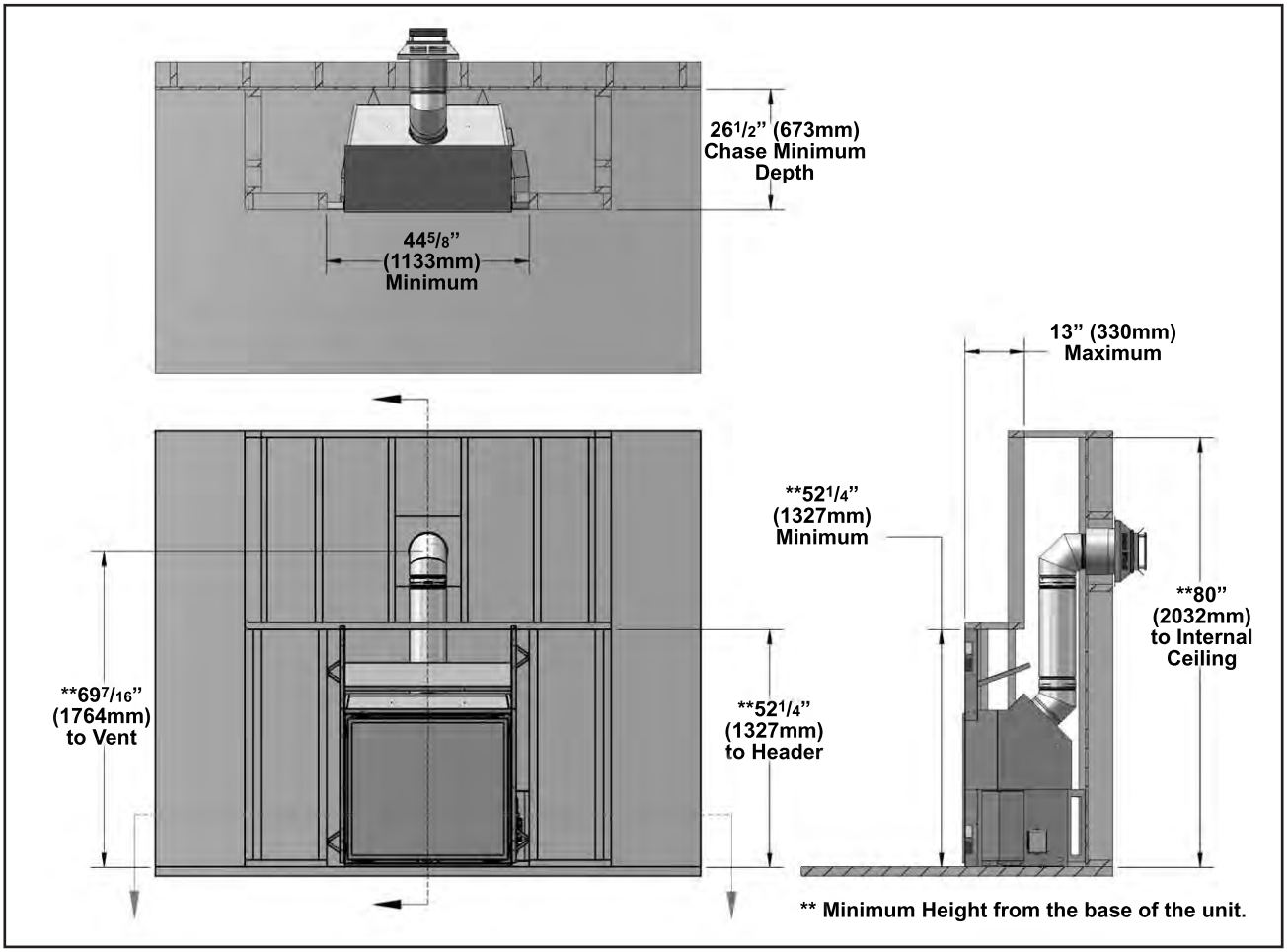

Figure 6. Typical Framing for Internal Chase - Detailed.

TYPICAL FRAMING - EXTERNAL CHASE:

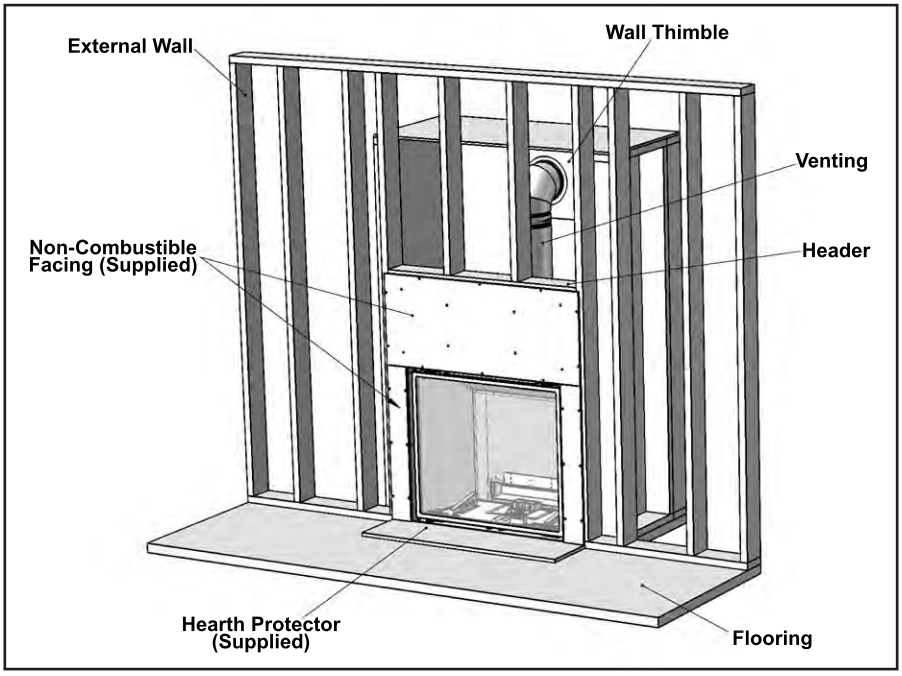

Figure 7. Typical Framing for External Chase - General.

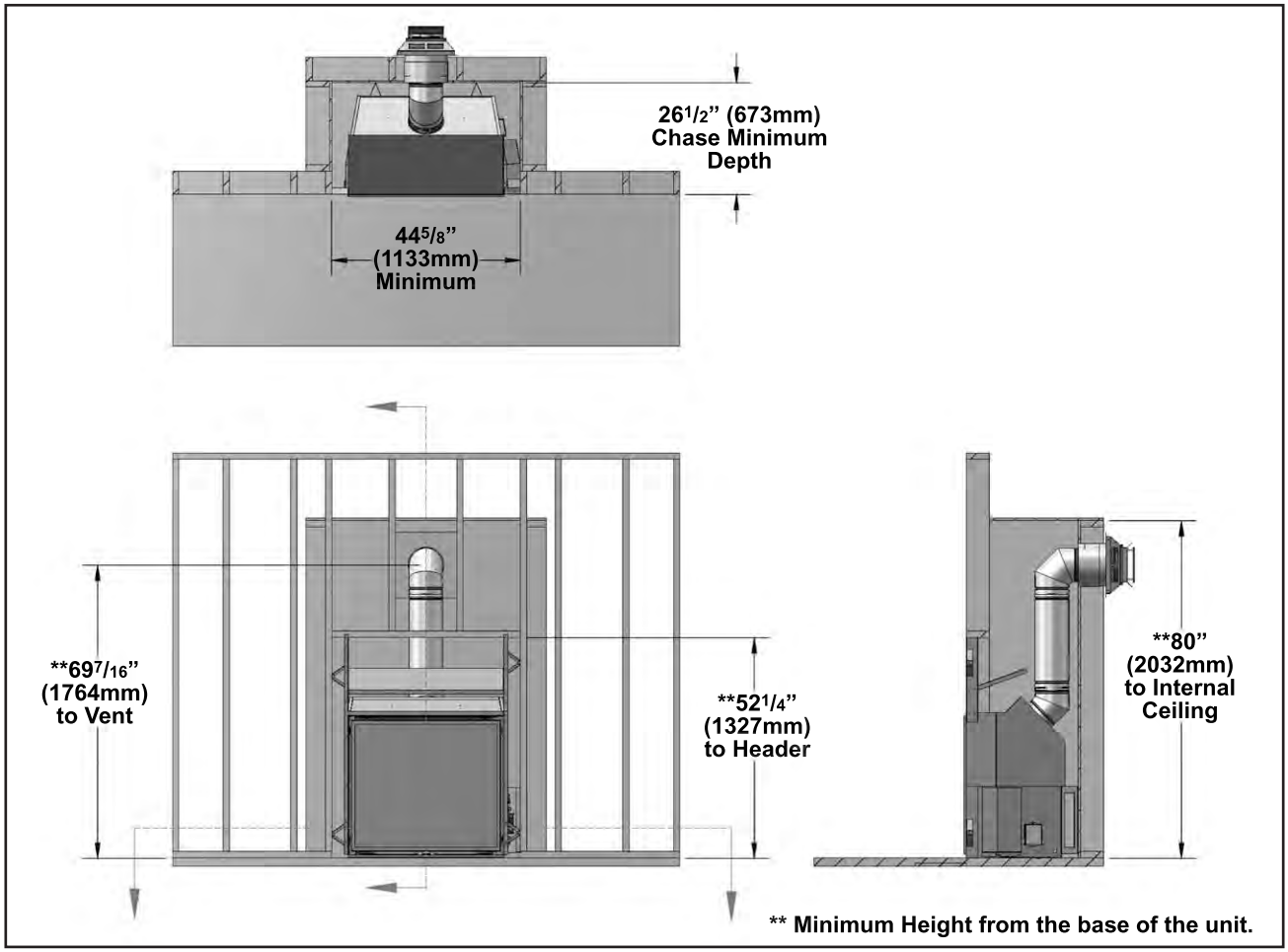

Figure 8. Typical Framing for External Chase - Detailed.

TYPICAL FRAMING - CORNER:

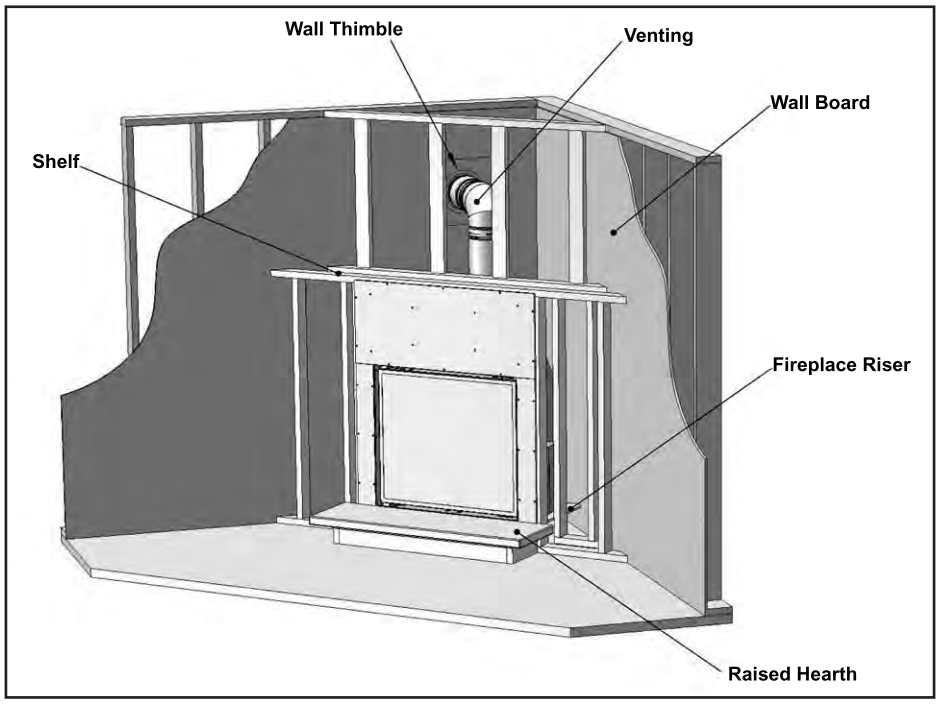

Figure 9. Typical Framing for Corner - General.

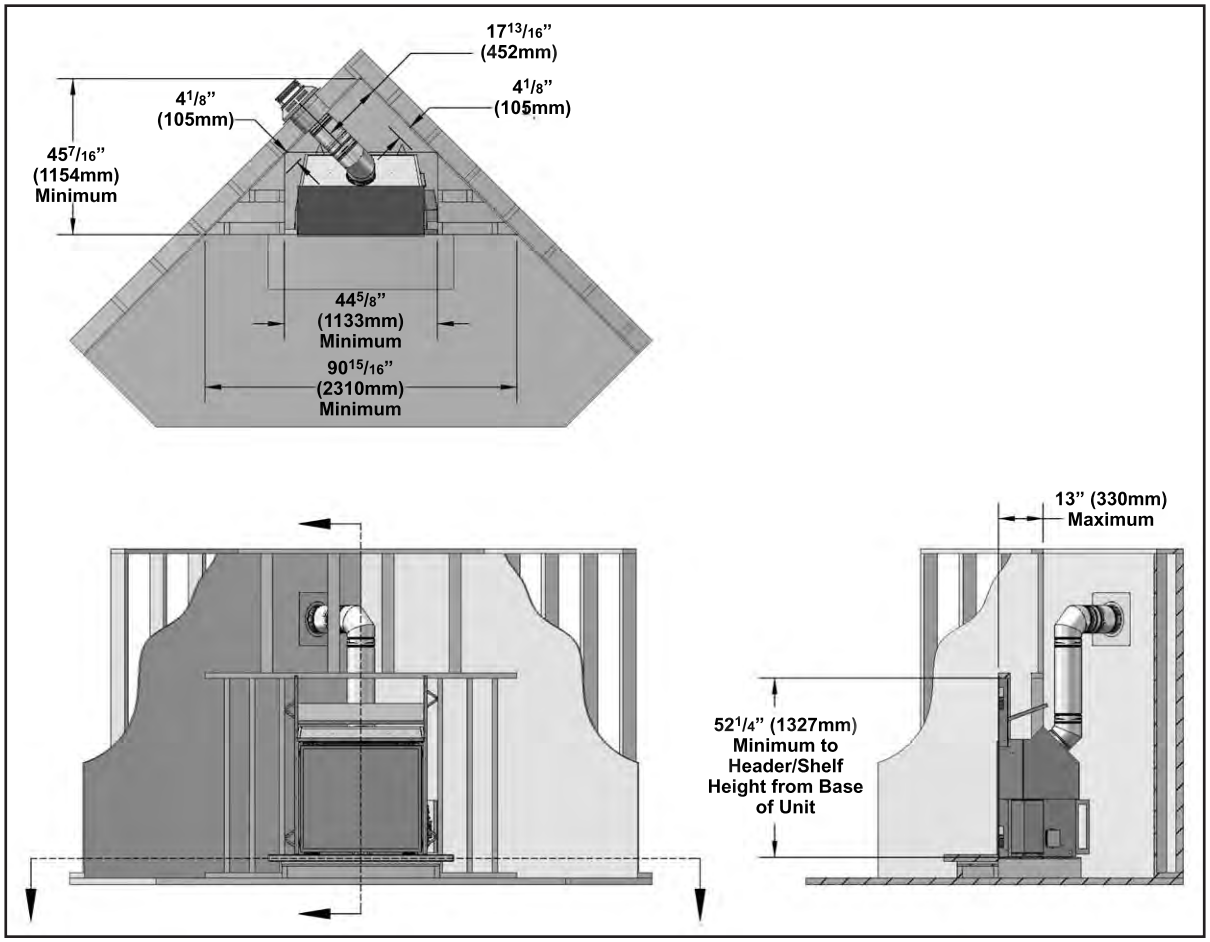

Figure 10. Typical Framing for Corner - Detailed.

TYPICAL FRAMING - SIDEWALL AND MANTEL:

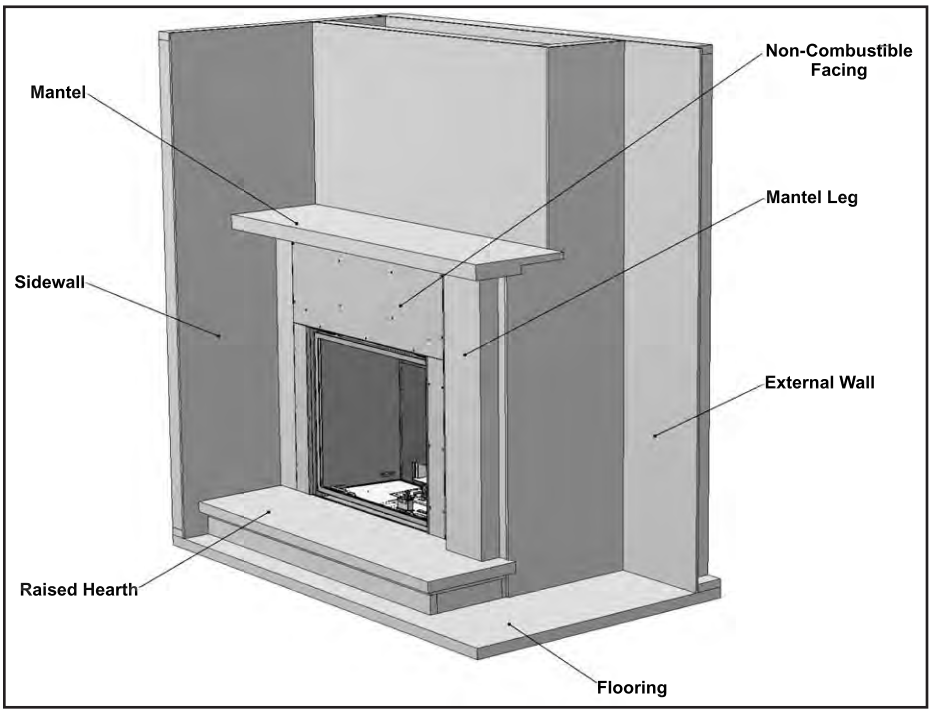

Figure 11. Typical Framing for Sidewalls & Mantel - General.

The mantel's maximum overhang is 10" (254mm) at the minimum height of 52¼" (1327mm) measured from the base of the fireplace.

The mantel can extend 1" (25.4mm) further for every 1" (25.4mm) of height it is installed over the minimum height, as shown in Figure 12.

Non-combustible mantels and mantel legs are not limited to these dimensions.

Mantel temperatures are monitored during testing and can reach 117°F (47°C) above room temperatures. Make sure the finish on your mantel is suitable for temperatures of this range.

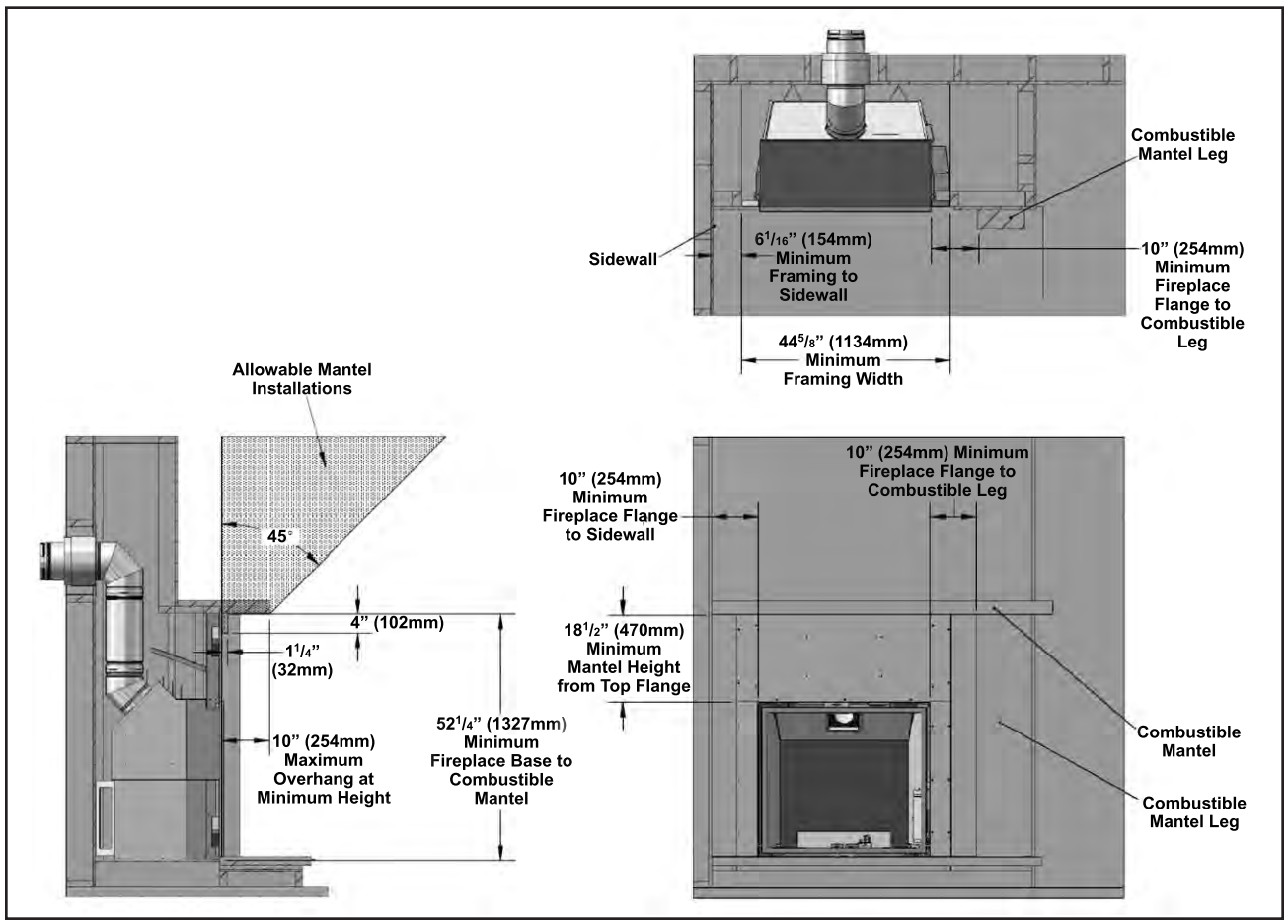

Figure 12. Typical Framing for Sidewalls & Mantel - Detailed.

TYPICAL FRAMING - RAISED HEARTH:

Warning: Failure to follow these guidelines may result in elevate operating temperatures, an inability to remove or install the door, or install the optional fronts that are available for this unit.

A non-combustible Hearth Insulation Board is required (supplied) to be installed between any non-combustible hearth covering and any combustible flooring beneath.

The design of the unit is such the fireplace must be raised by the same distance as any additional hearth covering or riser that are added in front of the fireplace.

Figure 14 shows a raised hearth made of a wooden construction hearth riser (B), covered with the insulation board provided and then covered with non-combustible slate (A). The thickness of the riser (B) is 4" (102mm). The thickness of the slate (A) is 2" (52mm). A+B=C which is 6" (152mm). In summary, the fireplace must be raised by the same thickness of any material added in front of the fireplace, with exception of the ½" (13mm) Hearth Insulation Board that was provided with the unit.

If the raised hearth is deeper and widerthan the Insulation Board provided with the unit, addition non-combustible building materials such as Backer Board (cement board) can be used to build up to the same thickness around the Insulation Board.

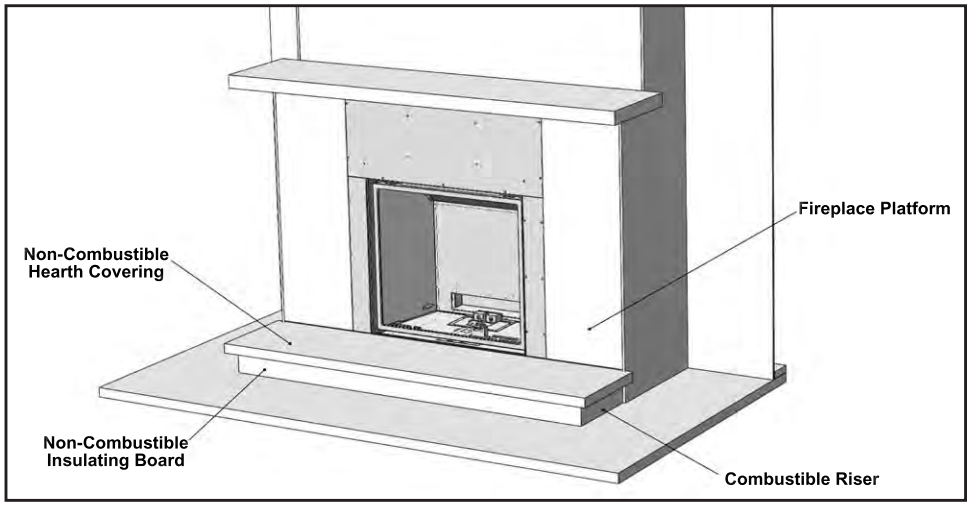

Figure 13. Typical Framing for a Raised Hearth - General.

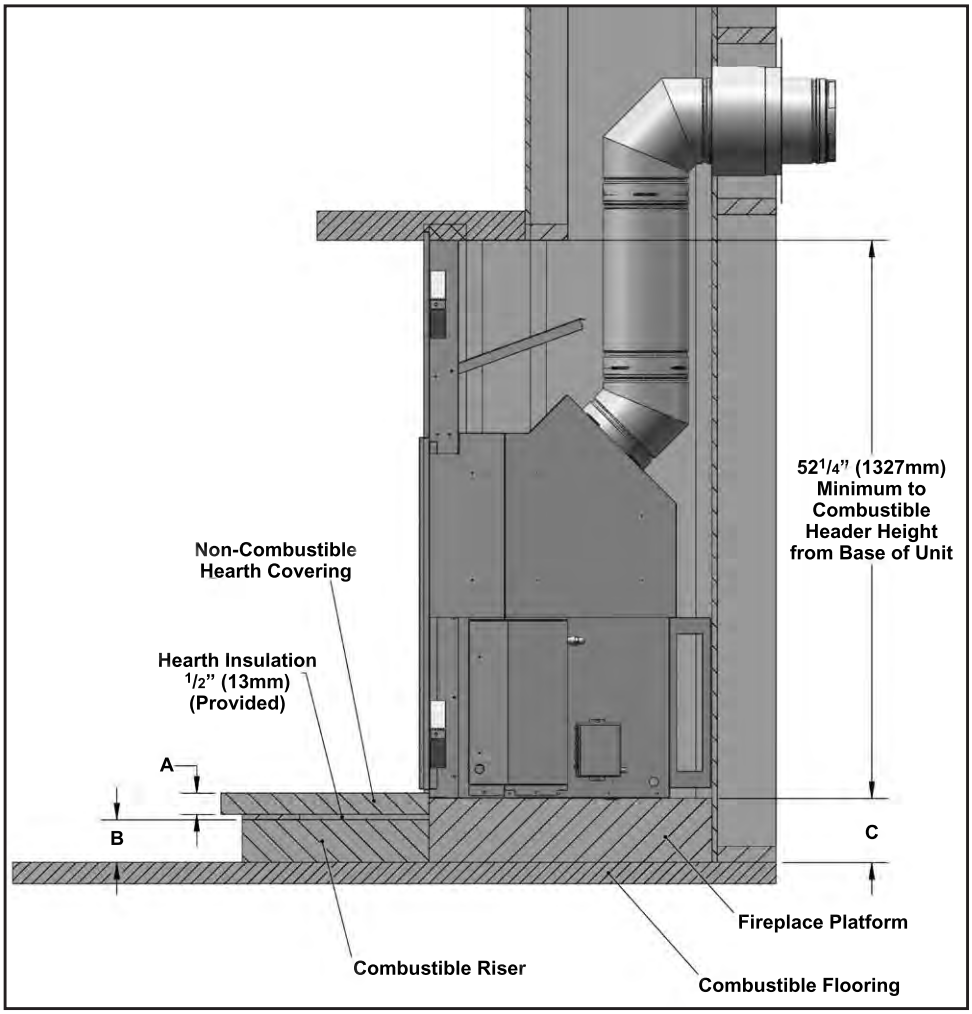

Figure 14. Typical Framing for a Raised Hearth - Detailed.

All header, ceiling or shelf dimensions are measured from the floor that the fireplace sits on. Failure to maintain minimum installation dimensions can lead to elevated temperatures, fire or personal injury.

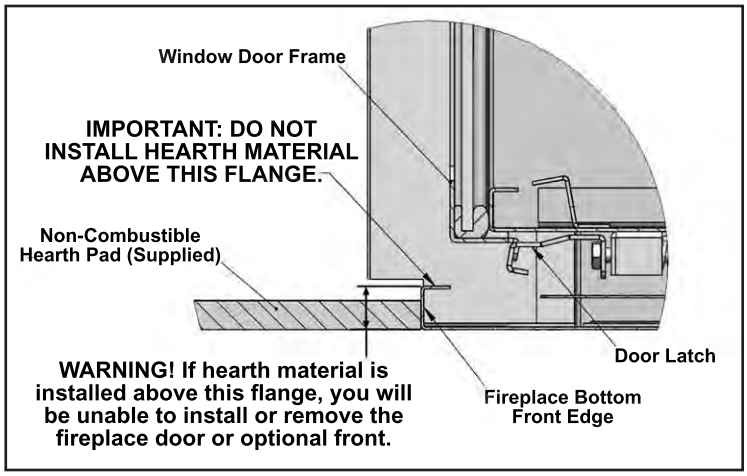

Figure 15. Fireplace Section for a Raised Hearth - WARNING.

INSTALLATION OF FIREPLACE FACING:

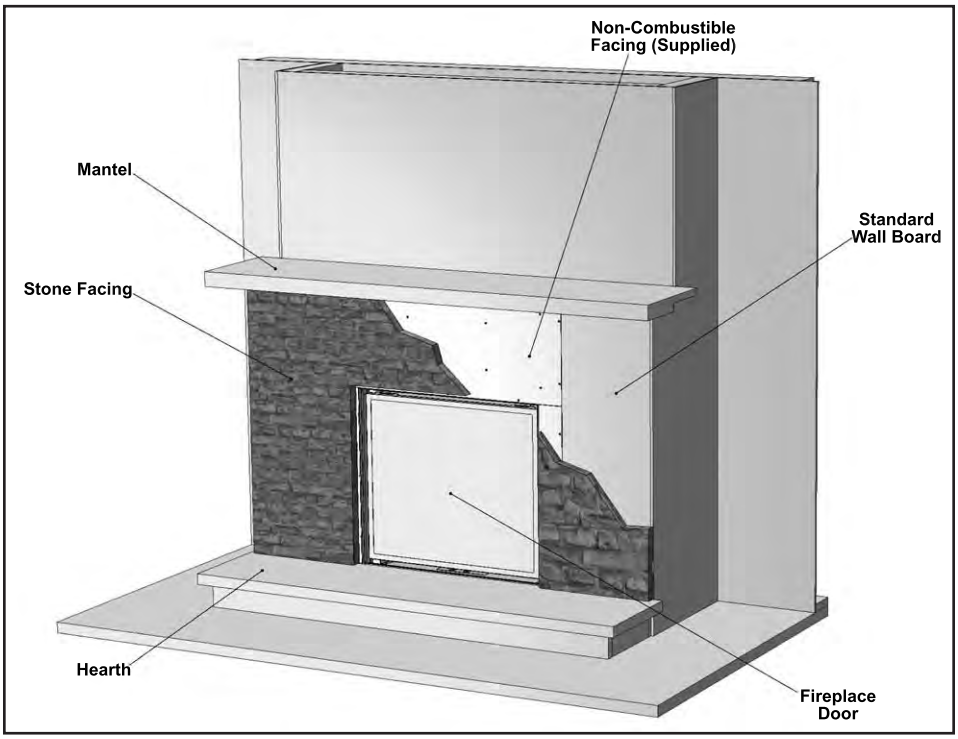

Figure 16. Typical Facing for the Fireplace - General.

There are a number of optional fronts available for use with the DV48. These fronts lift on and off of the fireplace, providing access to the fireplace for regular maintenance and service.

You have 3 possible scenarios when installing facing to your fireplace installation. Care must be taken to ensure proper clearances are maintained. Clearances are required between optional fronts and any stone work applied to your fireplace installation. Failure to maintain this clearance will lead to elevated operating temperatures and possible discoloration of materials and or fronts.

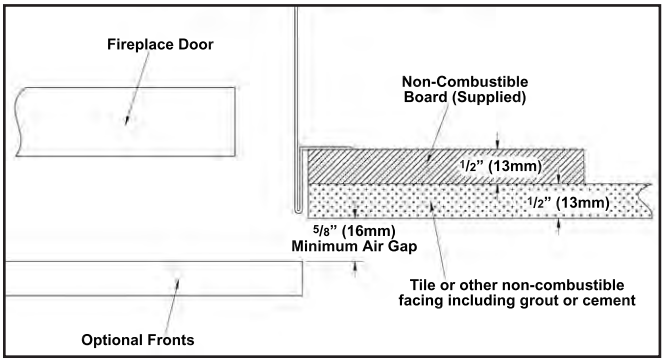

Figure 17. Option 1 - Fireplace Facing Less Than 1" (25.4mm) Thick With Optional Front Installed.

Three (3) possible installations include:

1) For fireplace facing less than 1" thick (total facing and non-combustible board combined) with an optional front installed.
2) For fireplace facing greater than 1" thick with an optional front installed.
3) For any fireplace facing without an optional front installed.

Figures 17 to 19 highlight the relationships between the fireplace, optional front, and facing installed.

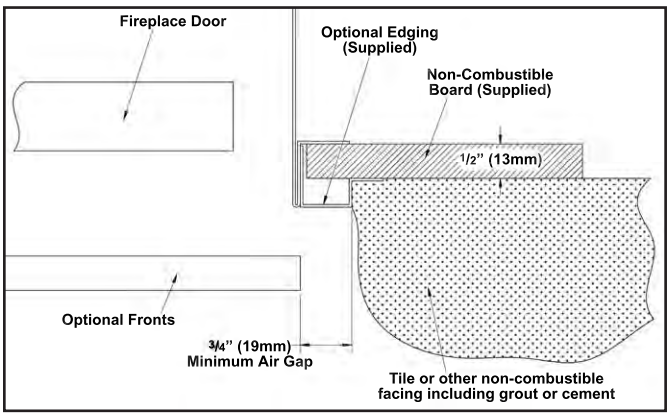

Figure 18. Option 2 - Fireplace Facing More Than 1" (25.4mm) Thick With Optional Fronts Installed.

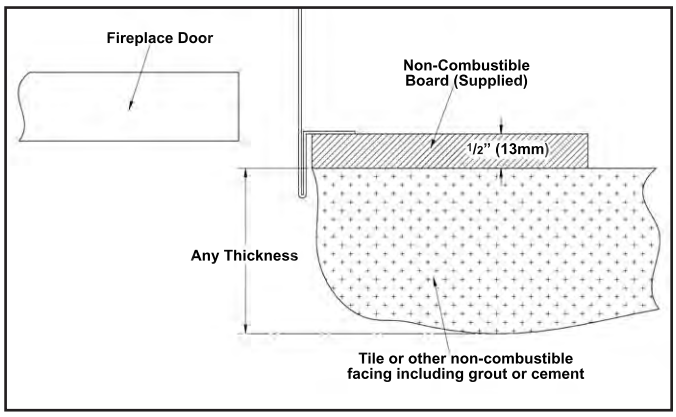

Figure 19. Option 3 - Any Fireplace Facing Without Optional Front Installed.

INSTALLATION OF OPTIONAL FACING TRIM:

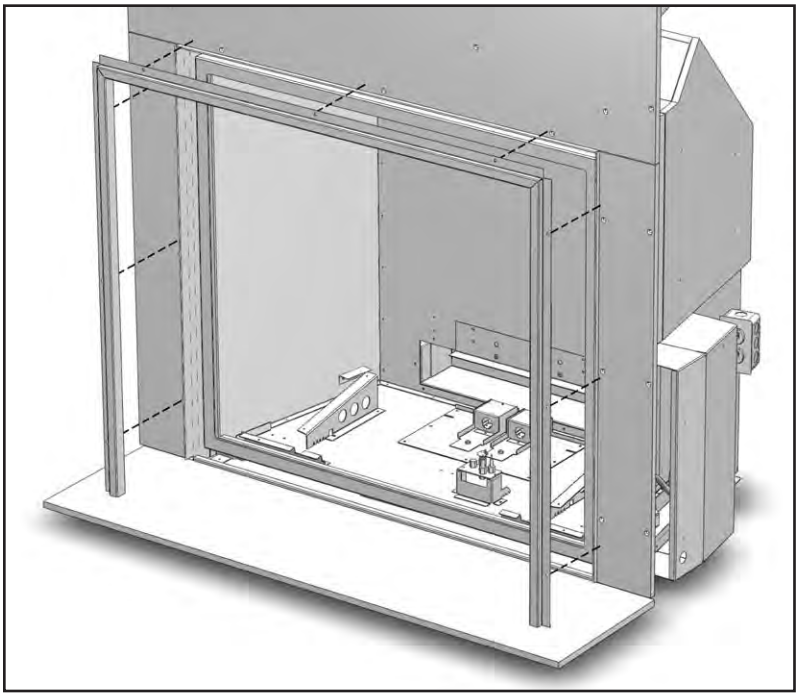

Figure 20. Optional Facing Trim Installation - General.

The Optional Facing Trim supplied with your fireplace is designed to fit between the supplied non-combustible board and the fireplace drywall flange.

IMPORTANT: When installing the wall board, leave a small gap between it and the fireplace drywall flange.

Insert the long side of the Right Trim into this gap and secure with drywall screws where holes are prvided. Complete it at the top and left edges. Other fireplace facing can then be installed over the exposed flange

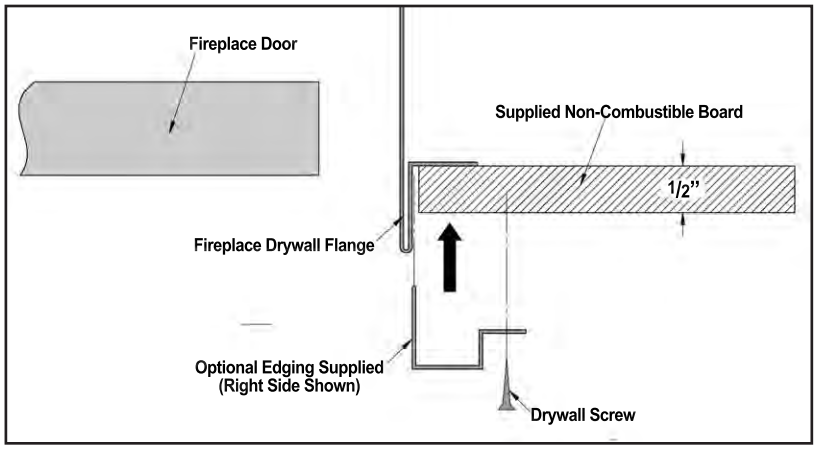

Figure 21. Optional Facing Trim Installation - Right Detail.

Planning Your Installation

Installation of Receiver:

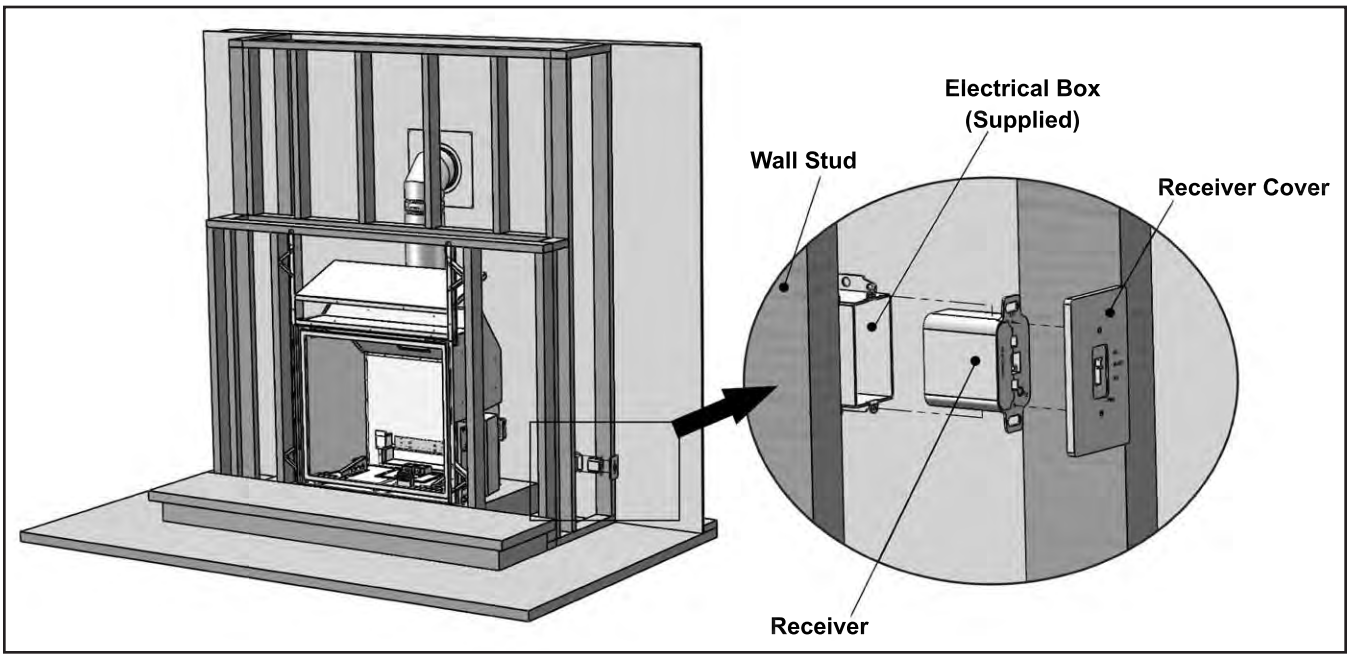

Figure 22. Receiver Installation.

The Receiver is the heart of the remote control system. You need to access this receiver after installation to change the batteries (for operation during a power failure), to program a new remote / receiver combination and to operate a manual override should you lose your remote control or the batteries in the remote control lose their power.

The Receiver is connected to the fireplace with a wire harness that has a maximum length of 8 ft (3m). The connection point on the fireplace is on the right side of the unit, where the gas valve and electronic ignition module is located. Because of the 8 ft (3m) limitation in the wiring harness, the receiver needs to be mounted to the right side of the fireplace. An electrical box is provided for the receiver. Mount this electrical box as you would any electrical outlet or switch box. Thread the cable and connector through the back of the electrical box and connect it to the rear of the receiver. Secure the receiver into the electrical box. Once the facing of the fireplace installation is complete, install the receiver cover, supplied with the unit as shown. The receiver cover also functions as a switch plate and has a provision for access the program button, critical for remote control operation.

Review the section in this manual regarding the remote control operations for more information on the functions of the receiver.

Allowable Vent Configurations:

The vent chart, in Figure 23, illustrates the vent configurations that have been tested and approved for use with this appliance. 45° elbows are acceptable for this installation and may be used instead of 90° elbows. You may use two (2) 45° elbows for every 90° elbow shown in this chart.

This appliance is also approved for use with 5" x 8" flex venting. Only use flexible venting that is approved for fireplace applications. Flex vent runs must comply with the same limitations as the rigid vent chart shown here. Flexible vent runs greater than 8' total are not recommended. Mixed vent runs of both Flexible and rigid venting are allowed providing all the proper connectors are utilized. See your vent providers' catalogue for flex to rigid or rigid to flex adaptor numbers.

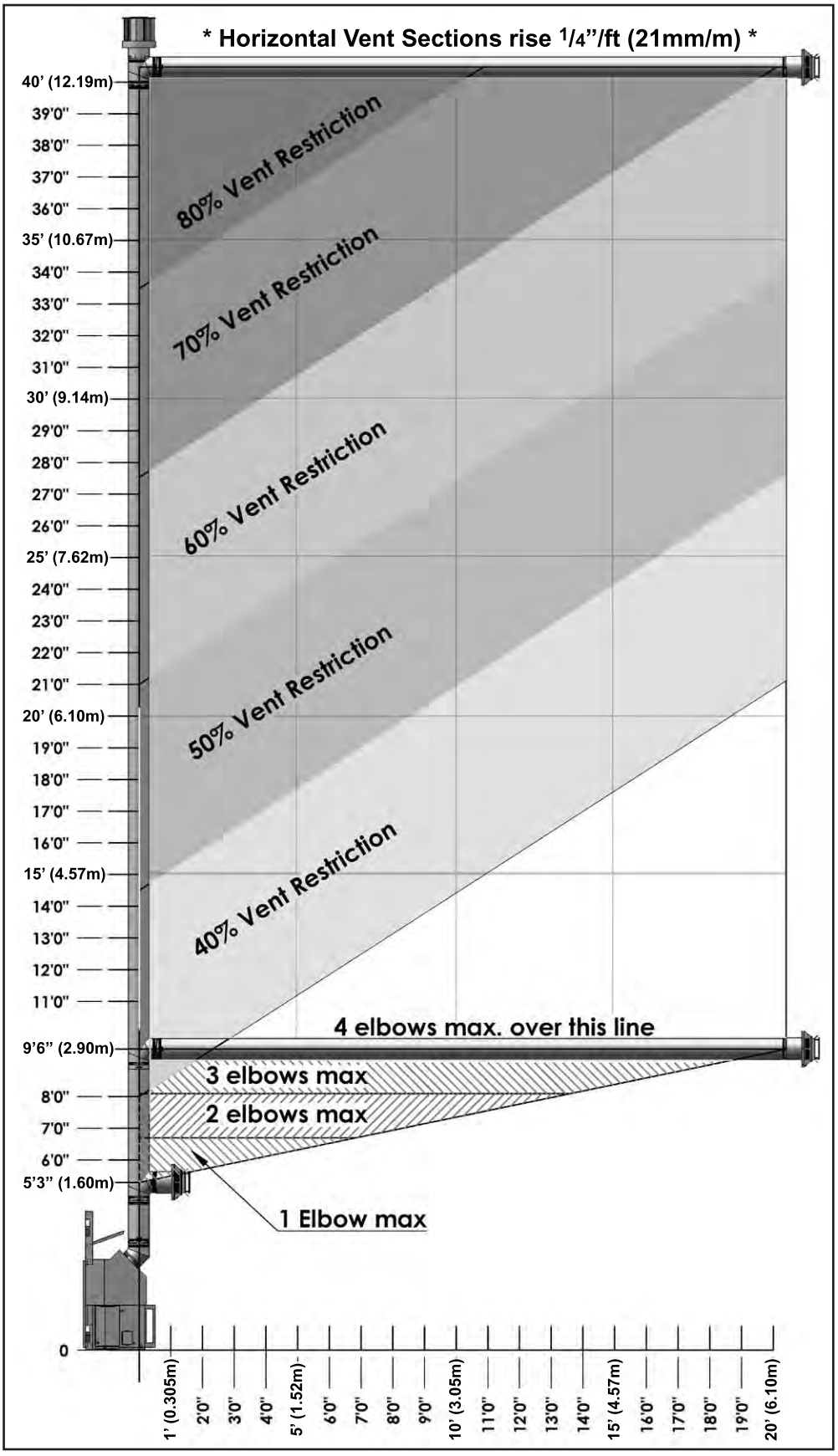

Figure 23. Allowable Vent Configurations Chart.

The restrictor settings shown in Figure 23, are recommended. Installation factors such as altitude, prevailing weather conditions such as temperature or wind, or the number of elbows used may affect your final restrictor settings. To little restriction may cause pilot outages or reduced efficiencies. Too much restriction may lead to elevated operating temperatures, poor flame appearances, sooting or carbon deposits building on burner effects or window glass.

Only use the restrictors supplied with this appliance.

VENT TERMINATION RESTRICTIONS:

QUALIFIED INSTALLERS ONLY

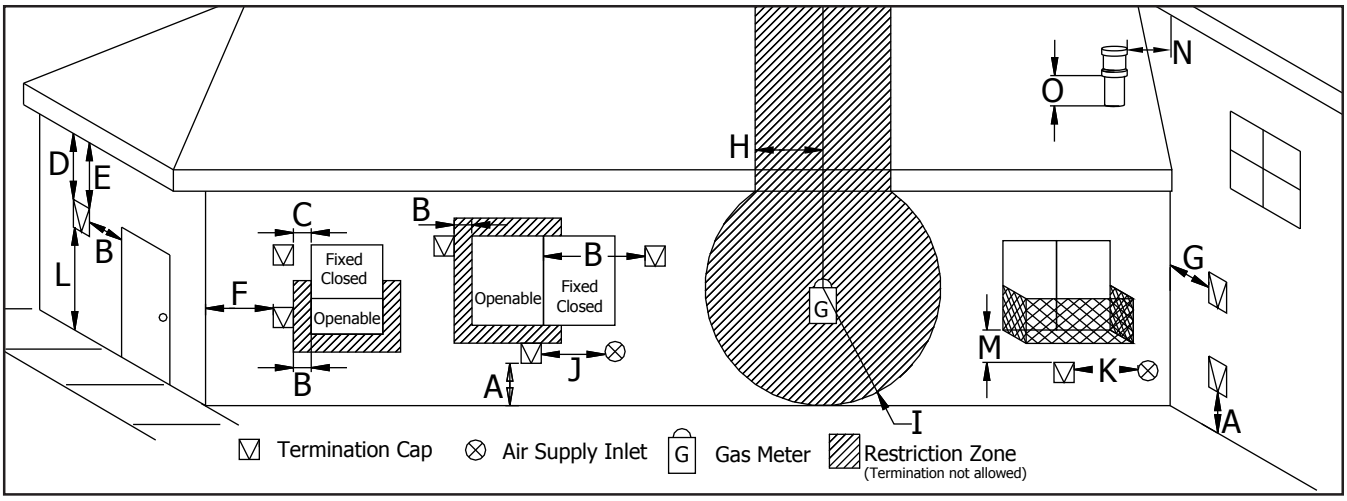

Figure 24. Vent Termination Restrictions, refer to Table 1.

Table 1: Vent termination clearances, refer to Figure 24.

Letter	Canadian Installation [1]	US Installation[2]	Description
A	12 in (30 cm)		Clearance above grade, verandah, porch, deck, or balcony.
B	12 in (30 cm)	9 in (23 cm)	Clearance from window or door that may be opened.
C	12 in (30 cm)*		Clearance from permanently closed window (to prevent condensation).
D	19¼ in (49 cm)		Vertical clearance to ventilated soffit located above the terminal, within a horizontal distance of 2 ft (60 cm) from center line of terminal.
E	19¼ in (49 cm)		Clearance to unventilated soffit.
F	17¼ in (44 cm)*		Clearance to outside corner.
G	17¼ in (44 cm)		Clearance to inside corner.
H	3 ft (91 cm) within a height of 15 ft (4.5 m) above the meter/regulator assembly	3 ft (91 cm) within a height of 15 ft (4.5 m) above the meter/regulator assembly*	Clearance to each side of center line extended above meter/regulator assembly.
I	3 ft (91 cm)	3 ft (91 cm)*	Radial clearance around service regulator vent outlet.
J	12 in (30 cm)	9 in (23 cm)	Clearance to non-mechanical air supply inlet to building, or the combustion air inlet to any other appliance.
K	6 ft (1.83 m)	3 ft (91 cm) above if within 10 ft (3 m) horizontally	Clearance to mechanical air supply inlet.
L	7 ft (2.13 m)[t]	7 ft (2.13 m)*[t]	Clearance above paved sidewalk or paved driveway located on public property.
M	19¼ in (49 cm)[+]		Clearance under verandah, porch, deck, or balcony.
N	12 in (30 cm)*		Clearance horizontally to any surface (such as an exterior wall) for vertical terminations.
O	12 in (30 cm)		Clearance above roof line for vertical terminations.

[1] In accordance with the current CSA B149, Natural Gas and Propane Installation Code.
[2] In accordance with the current ANSI Z223.1 NFPA 54, National Fuel Gas Code.
* These numbers are only estimates. Clearance in accordance with installation codes and the requirements of the gas supplier.
[t] A vent shall not terminate directly above a side walk or paved driveway that is located between two single family dwellings and it serves both dwellings.
[+] Permitted only if verandah, porch, deck, or balcony is fully open on a minimum of two sides beneath the floor.

NOTE: Venting terminals shall not be recessed into walls or siding.

APPROVED VENT PARTS:

Table 2: Vent part numbers (Must state if galvanized or black wanted, PART NUMBERS).

Part Description	Simpson Duravent	Security Chim.	American Metal	Selkirk Int.	Metal-Fab	EXCELDirect
6" Pipe Length	58DVA-06	SV5L6	5D7	5DT-06	5D6	TC-5DL6
9" Pipe Length	58DVA-09			5DT-09		
12" Pipe Length	58DVA-12	SV5L12	5D12	5DT-12	5D12	TC-5DL1
24" Pipe Length	58DVA-24	SV5L24	5D2	5DT-24	5D24	TC-5DL2
36" Pipe Length	58DVA-36	SV5L36	5D3	5DT-36	5D36	
48" Pipe Length	58DVA-48	SV5L48	5D4	5DT-48	5D48	TC-5DL4
60" Pipe Length	58DVA-60					
8 ½" Pipe Extension	58DVA-08A	SV5LA12(12")	5D7A 5D12A	5DT-AJ12	5DAL	
16" Pipe Extension	58DVA-16A	SV5LA24(24")	5D16A 5D26A			
Flexible Length, 36"						TC-5DLF
12" Adjustable Length						TC-5DLT
45° Elbow	46DVA-E45	SV5E45	5D45L	5DT-EL45	5D45L	TE-5DE45
90° Elbow	46DVA-E90	SV5E90	5D90L	5DT-EL90	5D90L	TE-5DE90
Roof Flashing	58DVA-F6	SV5F / SV5FA / SV5FB	5DF12	5DT-AF6 5DT-AF12	5DF	XF-6EF / XF-6EFA /XF-6EFB
Storm Collar	58DVA-SC	SV5FC	5DSC	5DT-SC	5DSC	TM-SC
Ceiling Firestop	58DVA-FS	SV5BF	5DFSP	5DT-FS		TM-5CS
Wall Firestop	58DVA-WFS				5DFS	
Wall Thimble	58DVA-WT	SV5RMS	5DWT	5DT-WT	5DWT	TM-5WT
Horiz. Square Termination	58DVA-HC-*	SV5CHC	5DHCS	5DT-HC	5DHT	TM-5HT/TM-5DHT
Horiz. Round Termination	58DVA-HRCS		5DHC			
Horizontal Sconce Termination	58DVA-HSC-*					
Vert. Termination, High Wind	58DVA-VCH	SV5CGV	5DVC	5DT-VT	5DVT	TM-5VT
Vinyl Siding Standoff	58DVA-VSS	SV5VS	5DHVS	5DT-VS	5DVS	TM-VSS
Flex Venting 5" and 8"	Duraflex					

***Several color choices**

IMPORTANT: This chart covers the major components for each of these manufacturers only. Refer to the manufacturers' catalogue for further details on roof flashings and other installation items

The DV48 fireplace has been tested and certified for use with AMERICAN METAL PRODUCTS "AMERIVENT DIRECT", SIMPSON DURAVENT TYPE GS PIPE FOR GAS STOVES. SECURITY CHIMNEY'S "SECURE VENT DIRECT VENT SYSTEM" and SELKIRK "DIRECT-TEMP VENT SYSTEM" kits are available for horizontal and vertical venting. When using Simpson Duravent, it is recommended that, before installation, a bead of RTV High Temperature Silicone should be applied to each outer vent joint, and Mil-Pac to each inner joint. When planning an installation, it will be necessary to select the proper length of vent pipe for the particular requirements.

WARNING: Do not mix parts from different vent manufacturers' systems.

Planning Your Installation

EXCEPTION TO WARNING: This product has been evaluated by Intertek for using a Direct Vent GS starting collar in conjunction with Secure Vent, Direct-Temp, and Ameri Vent Direct venting systems. Use of these systems with the Direct Vent GS starting collar is deemed acceptable and does not affect the Intertek WH listing of the appliance.

Table 3: Approved Vent Manufacturers

Manufacturer	Trade Name	Nominal Sizes
American Metal Products	AmeriVent Direct	5" x 8"
Security Chimneys International LTD	Secure Vent	5" x 8"
Selkirk Metalbestos	Direct-Temp	5" x 8"
Simpson Dura-Vent	Direct Vent GS	5" x 8" Co-axial Vent
EXCELDirect	ICC	5" x 8"

Installation of Flue Restrictor:

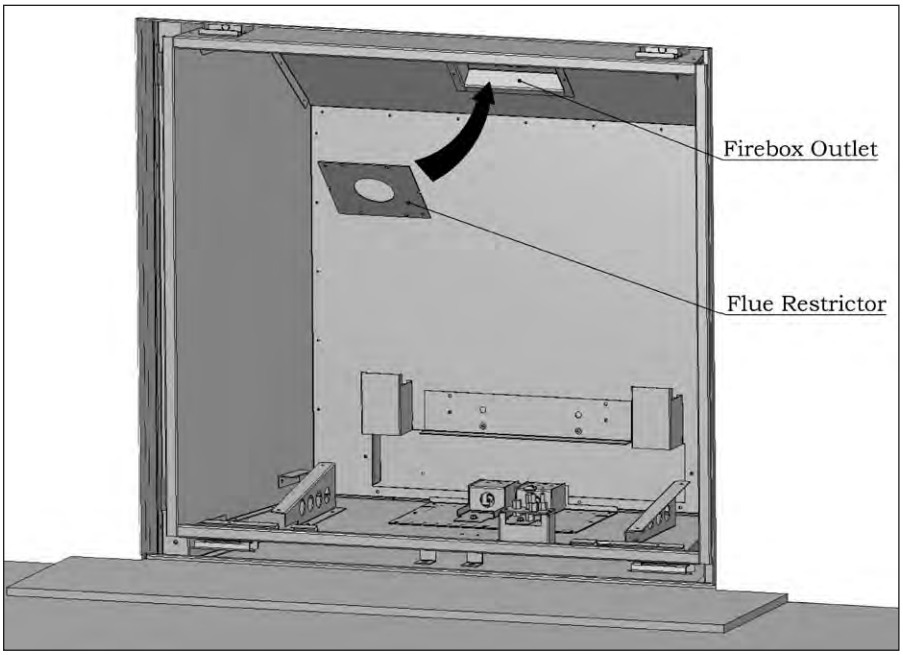

Figre 25: Installation of Flue Restrictor.

Flue Restrictors are necessary to keep the fireplace running at its intended efficiency. They are also required to counteract the effect that taller vertical vent runs may have on the appliance. The additional venting action that tall vertical vent systems may have can result in poor pilot and/or burner operations and possibly nuisance shut downs. Generally, the vent restriction may be less than what is shown in the vent chart, but not greater. The vent restrictor size is shown in percentages, meaning that a 40% restrictor restricts the vent 40% from its fully un-restricted vent size.

1) Remove the Glass Door; refer to Door Removal and Installation.
2) Remove the Burner and/or Log Set; refer to Burner Removal and Installation.
3) Remove the firebox liners; refer to Firebox Liner Installation.
4) Refer to the Vent Chart (Figure 23) for selection of the appropriate Restrictor.
5) Using the two (2) sheet metal screws provided with the restrictor, fasten the Restrictor into the Flue Outlet as shown in Figures 25 & 26. Make sure the diagonal holes line up with the diagonal holes located in the Flue Outlet Box Use a powered driver to drive the screw in as they have to pass through one thin gauge steel plate to complete the installation. Be careful not to over-torque the screw and strip the threads.

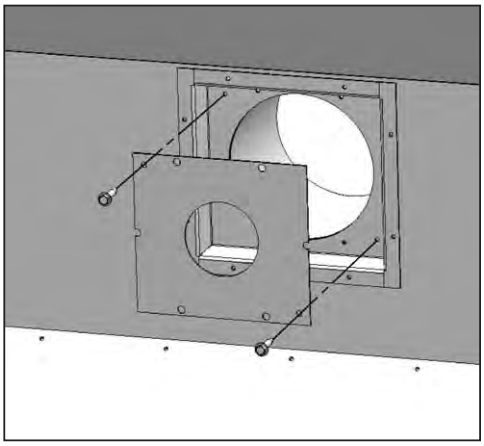

Figre 26: Installation of Flue Restrictor - Close-Up.

6) Re-install the Firebox Liners, Burners and log sets and the Glass Door.

7) Run the unit for ½ hour to check for proper operations and flame appearance.

TV INSTALLATION ABOVE UNIT:

During the development of the DV48, we took into consideration that in some installations TV's or flat panel monitors may be located above the mantel. Although we can not anticipate every possible installation variable, we took time to evaluate the suitability of the installation of a TV or Plasma display above the mantel. We carried out testing to evaluate what possible operating temperatures that may be experienced when the appliance was installed in an internal chase. A mantel was installed with the maximum overhang at the minimum allowable installation height, with a full 13" (330mm) shelf installed over the unit (see section NON-COMBUSTIBLE MATERIAL ZONE). The area above the mantel, within 4 inches (102mm) of the wall was measured under maximum operating conditions and found to not exceed 120°F (49°C). Variations of mantel overhangs, shelf depths or ceiling heights will affect this temperature. Please refer the TV owner's manual for information on acceptable operating conditions. Care must be taken to evaluate your specific installation and operating conditions when deciding to install electronic equipment above or near this appliance when it is in operation. Always consult your TVs owner's manual to ensure that this application is an approved installation.

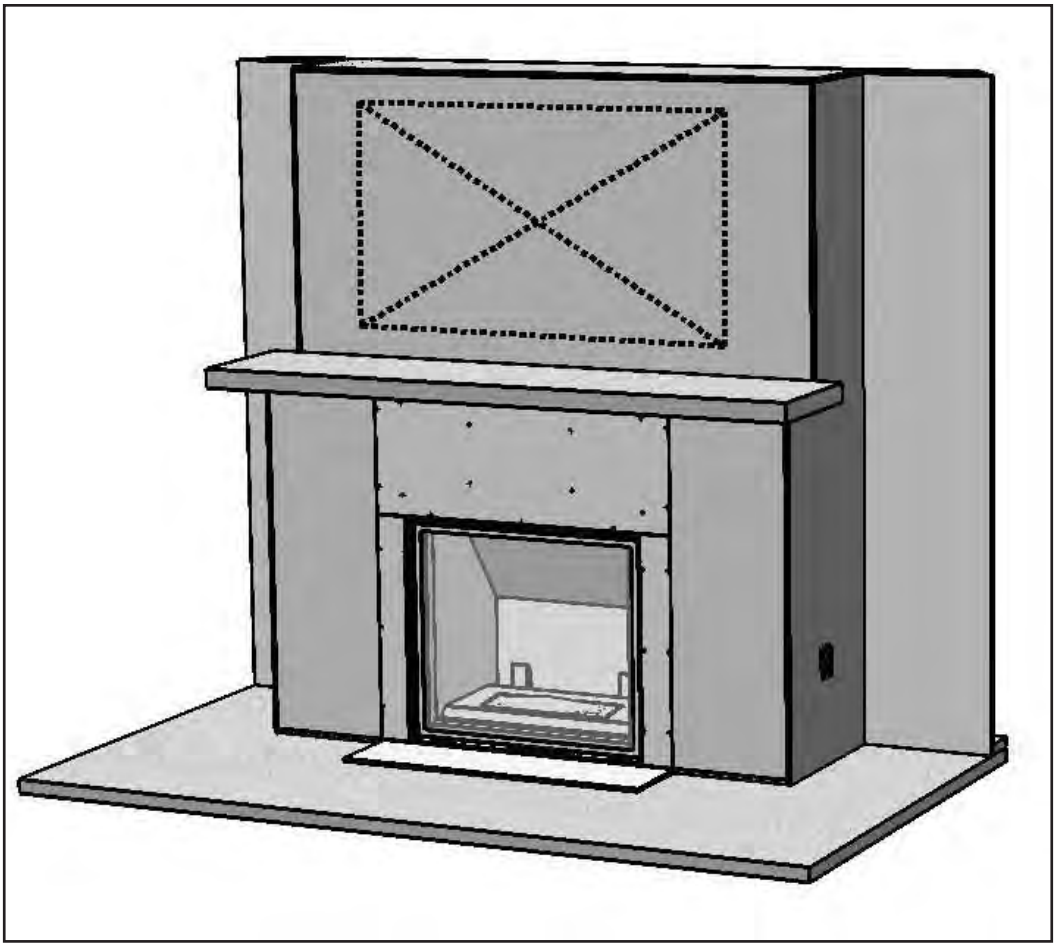

Figre 27: Installation of TV Above the Unit.

Installation Set-Up

QUALIFIED INSTALLERS ONLY

Planning Your Installation:

Prior to starting your venting installation, refer to the section on Allowable Vent Configurations to make sure your plans fall into the allowable limits of horizontal and vertical installations.

When planning your installation, it will be necessary to select the proper length of vent pipe for your particular requirements. For horizontal installations, refer to the section on Clearances to Combustibles to determine the minimum clearance from the rear of the appliance to the wall. It is also important to note the wall thickness. Select the amount of vertical rise desired for "vertical-to- horizontal" type installations. To determine the length of vent pipe required for vertical installations, measure the distance from the appliance flue outlet to the ceiling, the ceiling thickness, the vertical rise in an attic or second story, and allow for sufficient vent height above the roofline. For two-story applications, firestops are required at each floor level. If an offset is needed in the attic, additional pipe and elbows will be required.

Assembly of the Unit:

Using eight (8) T-20 screws provided, install the drywall supports right and left as well as the heat shield in the middle.

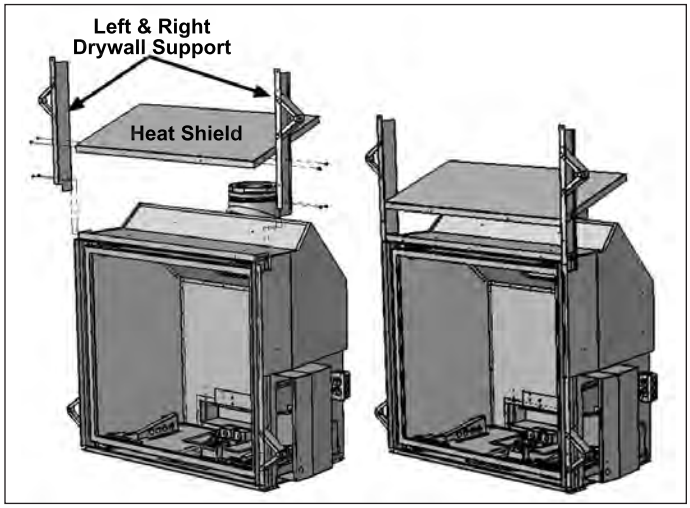

Figre 28: Installation of Supports & Heat shield.

Securing unit into Position:

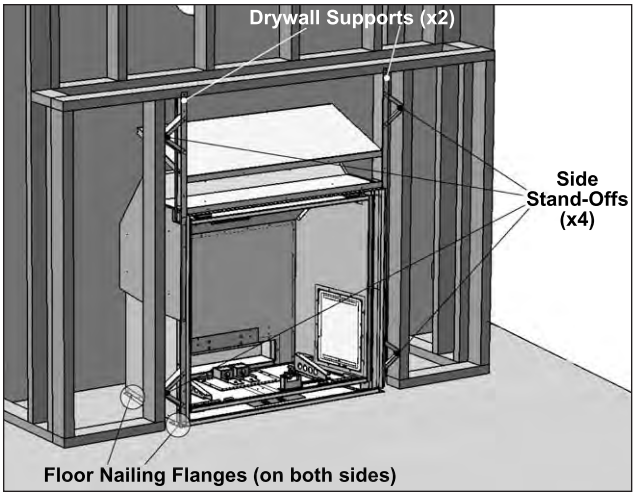

Figre 29: Securing the Unit.

Once the unit is in its final position, confirm that you have access to power, gas supply, that your non-combustible zone requirements are met, that you meet all the minimum vent requirements, and that you're planned vent terminal location will meet all of the vent termination clearances. Secure the unit to the floor, with at least four (4) wood screws, two (2) on either side of the unit's bottom nailing flange. Secure the side stand-offs to the framing members using four (4) wood screws, one (1) for each stand-off and to the header, one (1) wood screw for each drywall support.

Installation Set-Up

QUALIFIED INSTALLERS ONLY

Installation Of Non-combustible Wall And Hearth Board:

Install the non-combustible wall board and hearth protector provided with the unit. The side boards are interchangeable and are secured with drywall screws (¾" screws provided), three (3) to each side of the unit and three (3) to each side frame member. The top board is secured with three (3) drywall screws along the top frame (header), three (3) along the top nailing flange of the unit and two (2) on each vertical frame member. Also secure the top wall board to the heat shield behind it with two (2) screws and each drywall support upright with two (2) screws. See the section on hearth installation for installing the hearth protector, required with the installation of this unit. All the screws required to attach the wall board sides and top to the unit have corresponding holes already located on the units nailing flanges, drywall supports and heat shield.

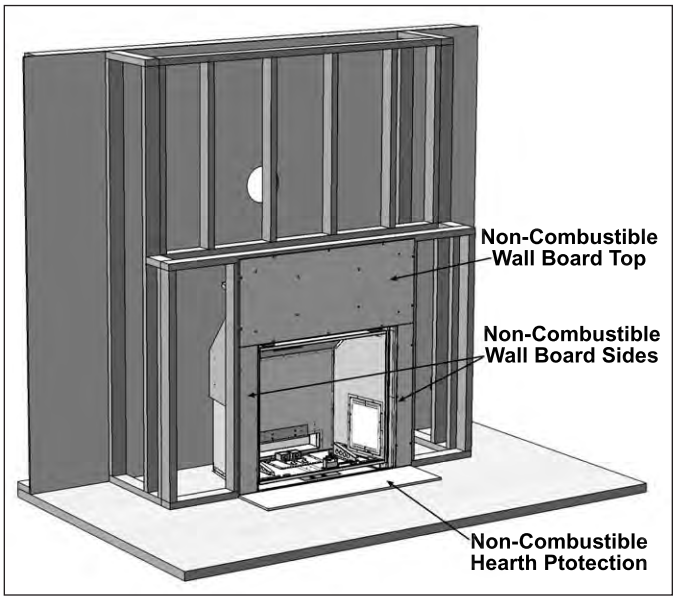

Figre 30: Installation of Wall & Hearth Board.

Installation Of Venting And Terminations:

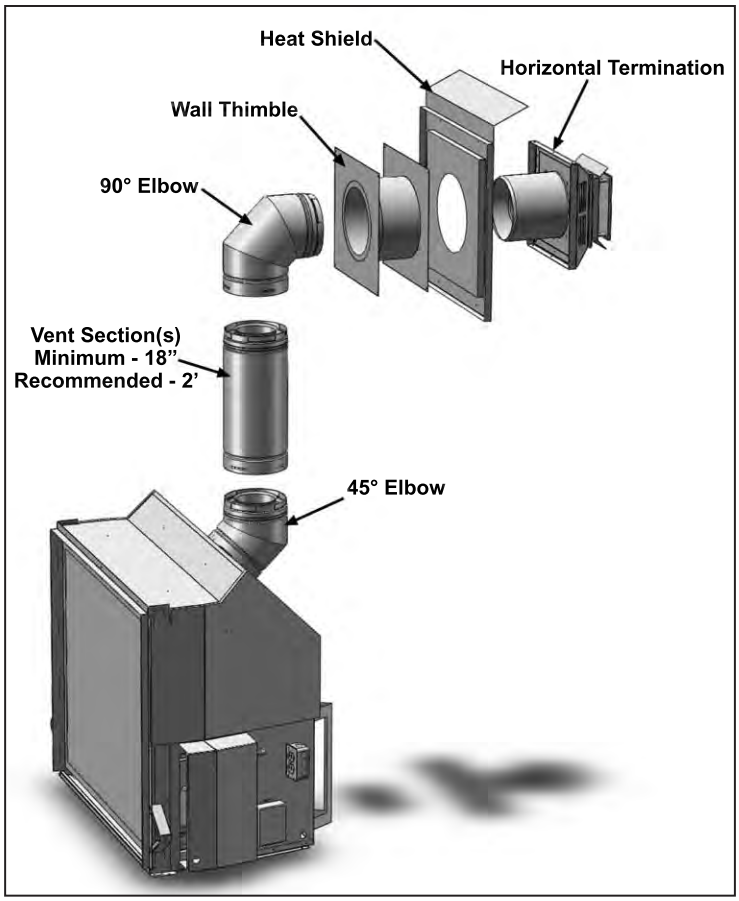

Figre 31: Typical Minimum Vent Configurations - Horizontal Terminated.

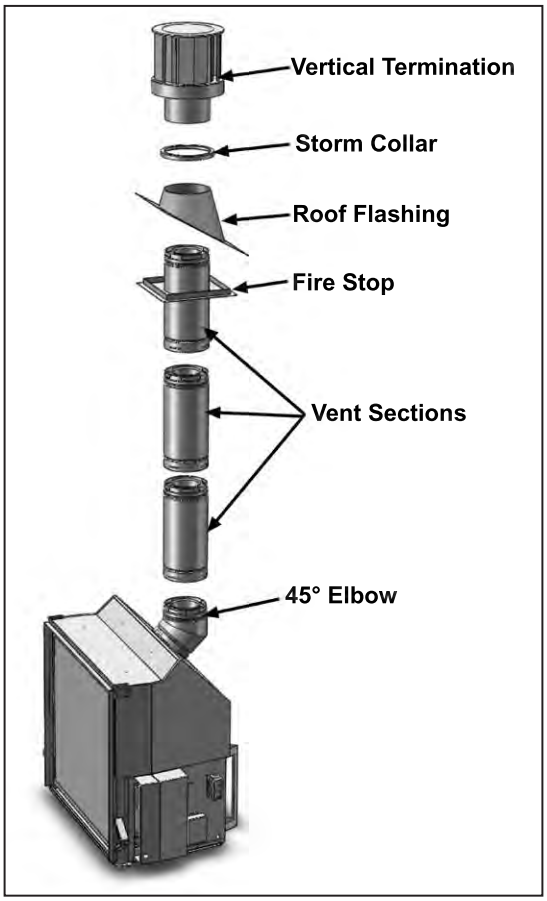

Figre 32: Typical Vent Configurations - Vertical Terminated.

Installation Set-Up

Read all instructions carefully before starting the installation. Failure to follow these instructions may create a fire or other safety hazard, and will void the warranty.

INSTALLATION PRECAUTIONS:

- Do not install any damaged venting or vent components.
- Do not modify any vent or termination component.
- Do not install any vent component that is not an approved vent component for this appliance.
- Do not use any instruction other that those included in this manual or those included by the vent component manufacturer with the venting. When there are discrepancies between the two, this manual will be considered the final authority.

Consult your local building codes before beginning the installation.

WARNING

- **Always maintain required clearances (air spaces) to nearby combustibles to prevent a fire hazard. Do not fill air spaces with insulation. Unless stated otherwise, clearances on horizontal vent sections are 2" (51mm) to combustible materials. Clearances to vertical vent sections are 1" (25mm) to combustible clearances.**
- **The fireplace and vent system must be vented directly to the outside of the building. Each direct vent fireplace must use its own separate vent system. Common vent systems are prohibited.**

Horizontal Installation:

Step 1. Set the fireplace in its desired location. Check to determine if wall studs or roof rafters are in the way when the venting system is attached. If this is the case, you may want to adjust the location of the appliance.

Step 2. Direct Vent pipe and fittings are designed with special twist-lock connections. Assemble the desired combination of pipe and elbows to the appliance. See the sections on Typical Framing - Internal Chase, External Chase or Corner Installation for some of the possible vent pathway options. All installations must fall within the Allowable Vent Configurations shown in Figure 20.

Notes:

(1) Twist-lock procedure: Four (4) indentations, located on the female ends of pipes and fittings, are designed to slide straight onto the male ends of adjacent pipes and fittings, by orienting the four pipe indentations so they match and slide into the four (4) entry slots on the male ends. Push the pipe sections completely together, then twist-lock one section clockwise approximately one-quarter turn, until the two sections are fully locked.

(2) Horizontal runs of vent must be supported every 3 feet (915mm). Wall Straps are available for this purpose.

(3) Sealant is only necessary on the outer tube of the GS Pipe. Run a ⅛ inch (3mm) wide bead of sealant around the male end of the outer sleeve, as shown in Figure 33, and twist-lock the pipes or fittings together.

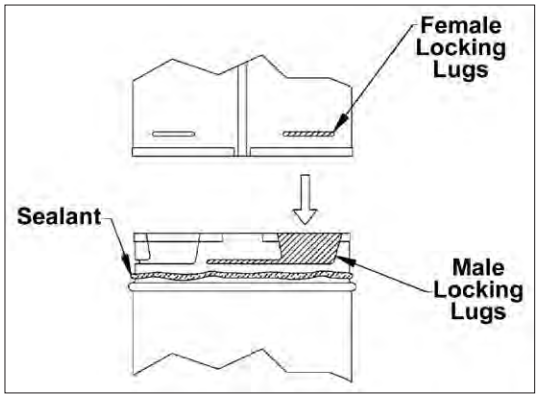

Figre 33: Twist-Lock Connection.

Step 3. With the adaptor and pipe attached to the fireplace, slide the fireplace into its correct location, and mark the wall for a square hole of the appropriate size. Use 11"x11" (280x280mm) square hole for 8" x 5" pipe. The center of the square hole should line up with the centerline of the

horizontal pipe, as shown in Figure 34. Cut and frame the square hole in the exterior wall where the vent will be terminated. If the wall being penetrated is constructed of non-combustible material, i.e. masonry block or concrete, a hole with zero clearance to the pipe is acceptable.

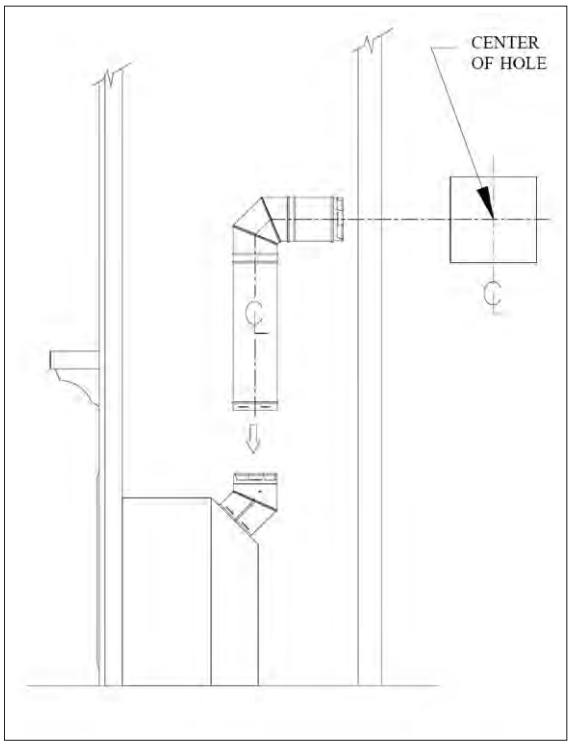

Figre 34: Horizontal Venting and Cut Away.

Notes:

(1) Any horizontal run of vent must have a ¼ inch (6mm) rise for every 1 foot (305mm) of run towards the termination. Never allow the vent to run downward. This could cause high temperatures and may present the possibility of a fire.

(2) The location of the horizontal vent termination on an exterior wall must meet all local and national building codes, and must not be easily blocked or obstructed. Termination clearances must comply with VENT TERMINATION RESTRICTIONS section.

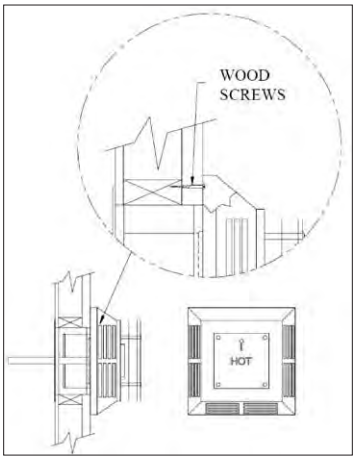

Figre 35: Fastening Horizontal Termination Cap in Place.

Step 4. For a Square Horizontal Vent Termination, place the vent cap in the center of the square hole and attach to the exterior wall with the four wood screws provided (refer to Figure 35). Before attaching the Vent termination to the exterior wall, run a bead of non-hardening sealant around its outside edges, so as to make a seal between it and the wall. If you are using a Round Horizontal Vent Termination, place an exterior Wall Firestop over the square hole. Run a bead of non-hardening sealant around the edges of the Wall Firestop, and attach the Wall Firestop to the wall with the four wood screws provided. The arrow on the vent cap should be pointing up. Ensure that proper clearances to combustible materials are maintained.

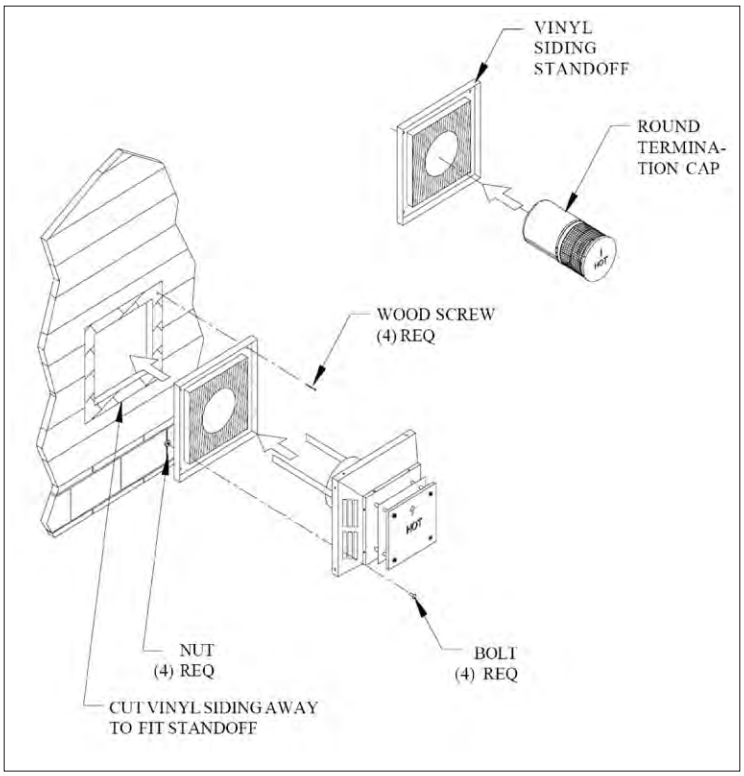

Figre 36: Installation of Vinyl Siding Standoff.

Notes:

(1) The four (4) wood screws provided should be replaced with appropriate fasteners for stucco, brick, concrete, or other types of sidings.

(2) For buildings with vinyl siding, a Vinyl Siding Standoff should be installed between the vent cap and the wall (see Figure 36). Attach the Vinyl Siding Standoff to the Horizontal Vent Termination. The Vinyl Siding Standoff prevents excessive heat from possibly melting the vinyl siding material. Note that the Square Horizontal Vent Termination bolts onto the flat portion of the Vinyl Siding Standoff, (Shaded area shown in Figure 36), so that an air space will exist between the wall and the Vent Termination.

Step 5. Before connecting the horizontal run of vent pipe to the vent termination, slide the Wall Firestop over the vent pipe on the interior side of the wall.

Step 6. Slide the appliance and vent assembly towards the wall, carefully inserting the vent pipe into the vent cap assembly. It is important that the vent pipe extend into the vent cap sufficient distance so as to result in a minimum pipe overlap of 1¼ inches (32mm). Secure the connection between the vent pipe and the vent cap. For square caps, attach the two sheet metal strips extending from the vent cap assembly into the outer wall of the vent pipe. Use the two sheet metal screws provided to connect the sheet metal strips to the pipe section. For round caps, use three sheet metal screws and attach cap to pipe section (see Figure 34).

Step 7. Slide the Wall Firestop up to the wall surface and attach with screws provided (see Figure 38).

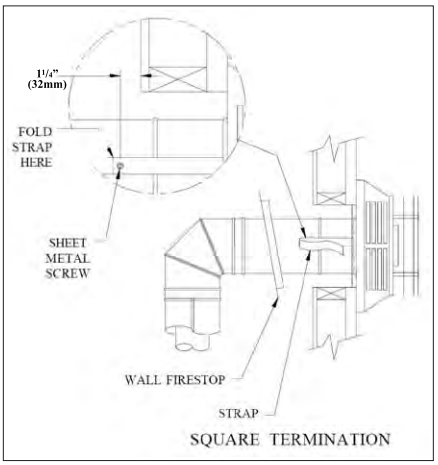

Figre 37: Installation of Vent Pipe to Termination.

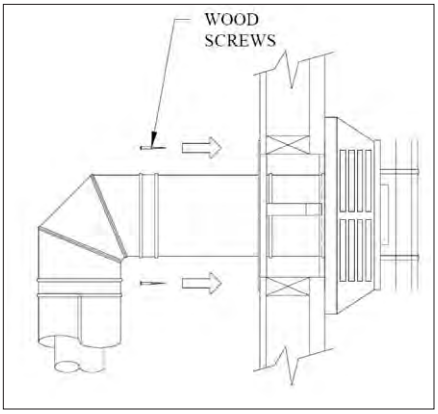

Figre 38: Installation of Wall Firestop.

VERTICAL TERMINATION INSTALLATION:

Step 1. Maintain clearances between venting and combustible building materials as stated earlier in this section. Do not pack air spaces with insulation. Check with the Allowable Vent Configurations page when planning your installation to ensure the vertical and horizontal elements of your installation are within these limits.

Step 2. Set the fireplace in its desired location. Drop a plum bob down from the ceiling to the position of the appliance flue exit, and mark the location where the vent will penetrate the ceiling. Drill a small hole at this point. Next, drop a plumb bob from the roof to the hole previously drilled in the ceiling, and mark the spot where the vent will penetrate the roof. Determine if ceiling joists, roof rafters, or other framing will obstruct the venting system. You may wish to relocate the appliance, or to offset, to avoid cutting load bearing members.

Step 3. To install the Ceiling Firestop in a flat ceiling, cut a square hole in the ceiling 11"x11" (280x280mm) square for 8" x 5" pipe, centered on the hole drilled in Step 2. Frame the hole as shown in Figure 39 .

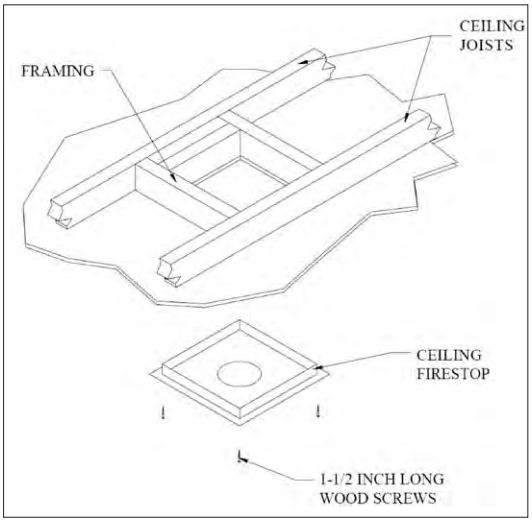

Figre 39: Installation of Ceiling Firestop.

Step 4. Assemble the desired lengths of galvanized Pipe and Elbows necessary to reach from the Appliance Adaptor up through the Ceiling Firestop. Ensure that all Pipe and Elbow connections are in their fully twist-locked position.

Step 5. Cut a hole in the roof centered on the small drill hole placed in the roof in Step 2. The hole should be of sufficient size to meet the minimum requirements for clearance to combustibles, as specified earlier. Continue to assemble lengths of Pipe and Elbows necessary to reach from the Ceiling Firestop up through the roof line.

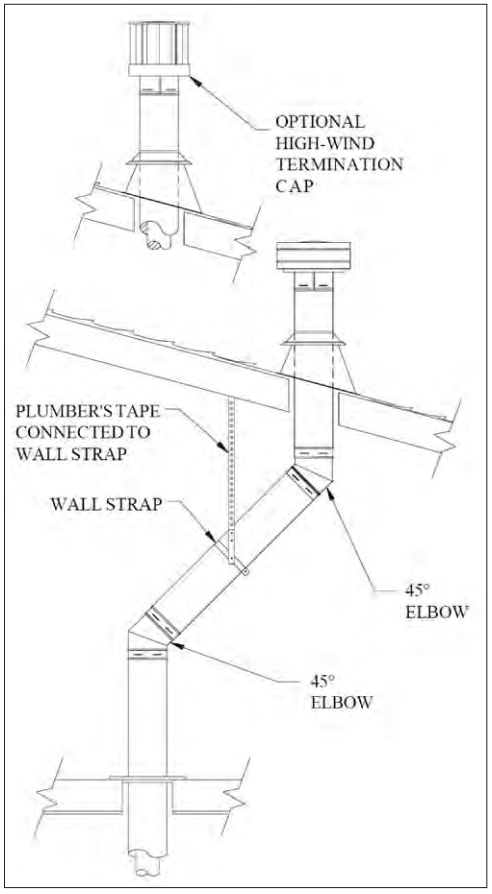

Figre 40: Vertical Installation using.

Notes:

(1) If an offset is necessary in the attic to avoid obstructions, it is important to support the vent pipe every 3 feet, to avoid excessive stress on the Elbows, and possible separation. Wall Straps are available for this purpose (see Figure 40).

(2) Whenever possible, use 45° Elbows, instead of 90° Elbows. The 45° Elbow offers less restriction to the flow of flue gases and intake air.

Step 6. Slip the flashing over the Pipe Section(s) protruding through the roof. Use a non-hardening sealant between the Flashing and the roof to prevent water leakage. Secure the base of the Flashing to the roof with roofing nails. Ensure the roofing material overlaps the top edge of the Flashing as shown in Figure 41. Verify that you have at least the minimum clearance to combustibles at the roofline.

Step 7. Continue to add Pipe Sections until the height of the Vent Cap meets the minimum building code requirements described by your local codes. In the absence of local codes, make sure the terminal is 2 feet (610mm) above anything within 10 feet (3046mm) of the vent (refer to Figure 43 & Table 4 for clearances for different pitches). Note that for steep roof pitches, the vent height must be increased. In high wind conditions, nearby trees, adjoining rooflines, steep pitched roofs, and other similar factors can result in poor draft, or down-drafting. In these cases, increasing the vent height may solve this problem.

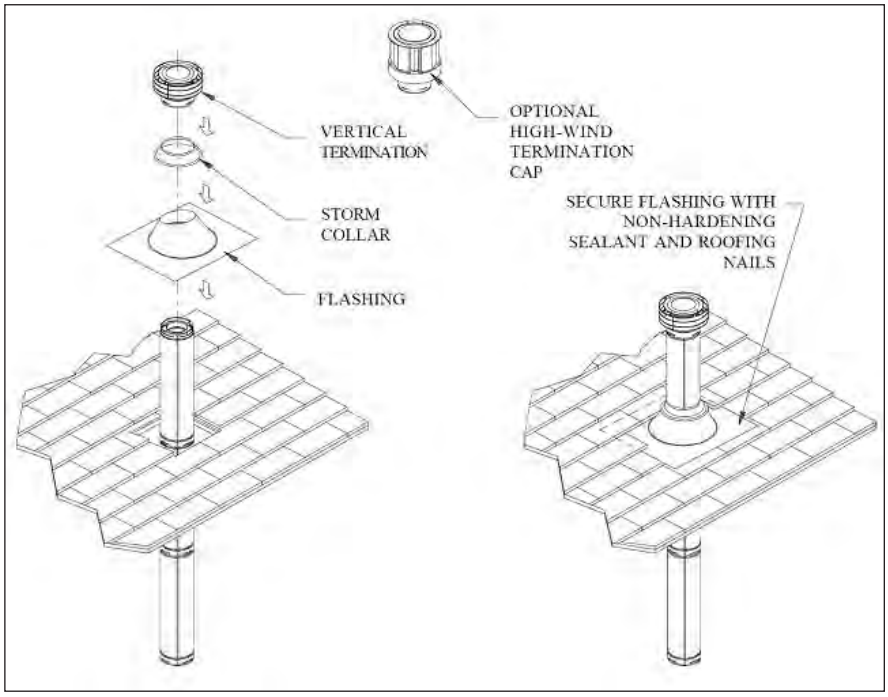

Figre 41: Installation of Flashing & Vertical Termination.

Step 8. Slip the Storm Collar over the Pipe, and push it down to the top of the Flashing, as shown in Figure 41. Use the non-hardening sealant above and below the joint between the Storm Collar and the Pipe.

Step 9. Twist lock the Vent Cap.

Notes:

(1) For multi-story vertical installations, a Ceiling Firestop is required at any subsequent floors (as shown in Figure 39). The opening should be cut and framed in the same manner as the opening in Step 3 (see Figure 39) .

(2) Any occupied areas above the first floor, including closets and storage spaces, which the vertical vent passes through, must be enclosed. The enclosure may be framed and sheet rocked with standard construction materials, however minimum allowable clearances between the outside of the vent pipe must be maintained. Do not fill any of the required air spaces with insulation.

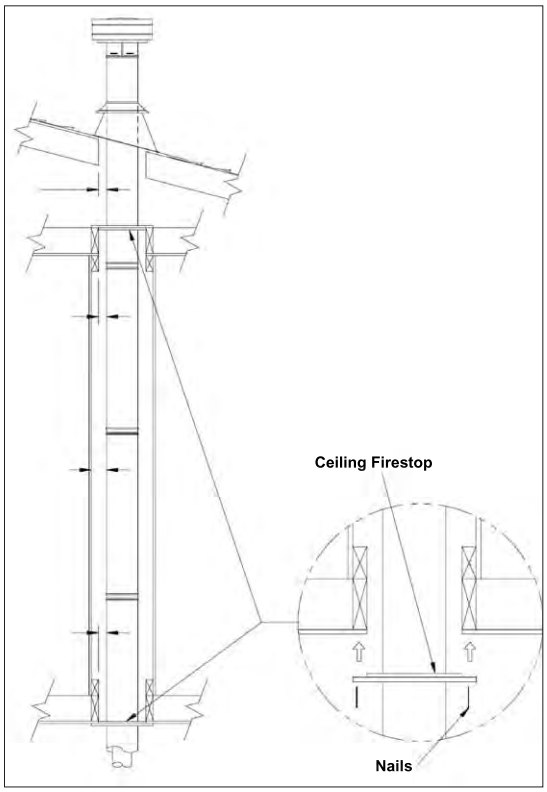

Figure 42: Installation of Ceiling Fire Stops.

Table 4: Minimum 'H' for Figure 43.

Roof Pitch	Minimum Height (H)	
	Feet	Meters
Flat to 7/12	1	0.3
Over 7/12 to 8/12	1.5	0.46
Over 8/12 to 9/12	2	0.61
Over 9/12 to 10/12	2.5	0.76
Over 10/12 to 11/12	3.25	0.99
Over 11/12 to 12/12	4	1.22
Over 12/12 to 14/12	5	1.52
Over 14/12 to 16/12	6	1.83
Over 16/12 to 18/12	7	2.13
Over 18/12 to 20/12	7.5	2.29
Over 20/12 to 21/12	8	2.44

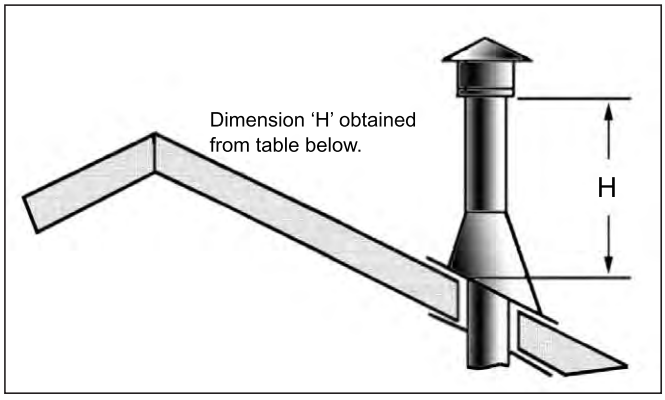

Figure 43: Height of Vertical Termination; Reference Table 4.

DOOR REMOVAL AND INSTALLATION:

1) The fireplace door is hung on two (2) hooks on the top of the firebox. The two (2) door latches at the bottom of the firebox hook over the tabs on the bottom of the door frame.

2) Lower the door latch tool underneath the door frame. Catch the lower door latch with the door latch tool (see Figure 44) and pull it out slightly, then down. Once the lower door latch clears the tab on the bottom of the door frame, release it inwards and then remove the door latch tool. Refer to Figures 46 & 47.

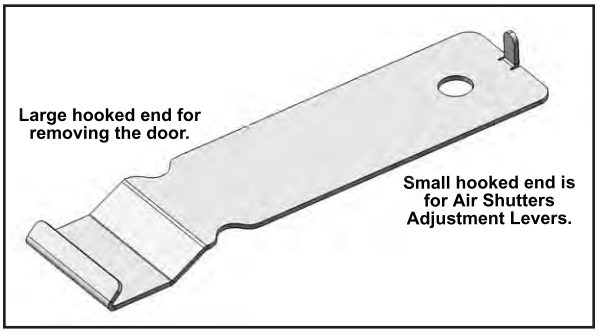

Figure 44: Door Latch /Air Adjustment Tool.

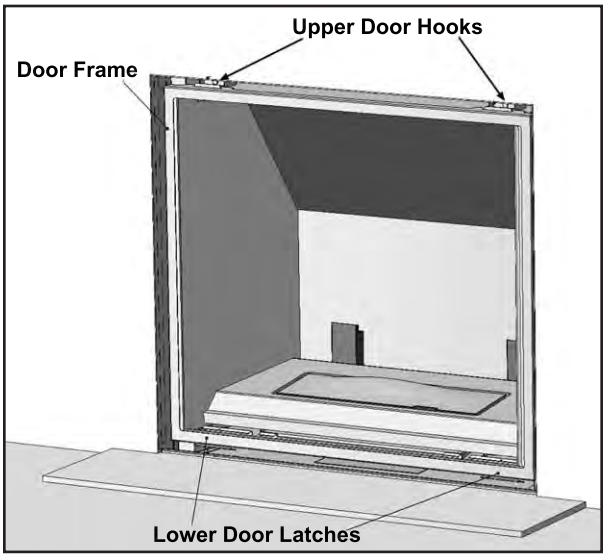

Figure 45: Door Latch Locations.

3) Pull the Door Frame at the bottom forward about 2" (5cm), then lift the Door Frame upwards to clear the Upper Door Hooks. Refer to Figures 47 & 48.

4) Lift the Door Frame away, being careful that the glass panel is secure within the Door Frame.

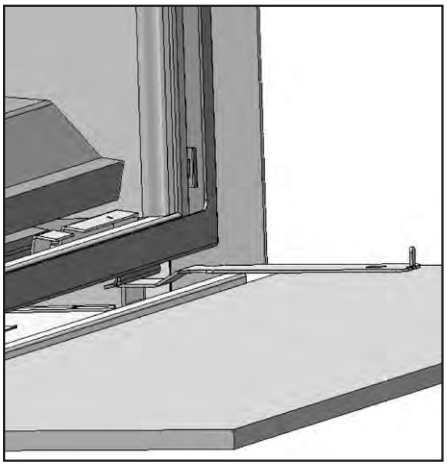

Figure 46: Door Latch Tool in Place.

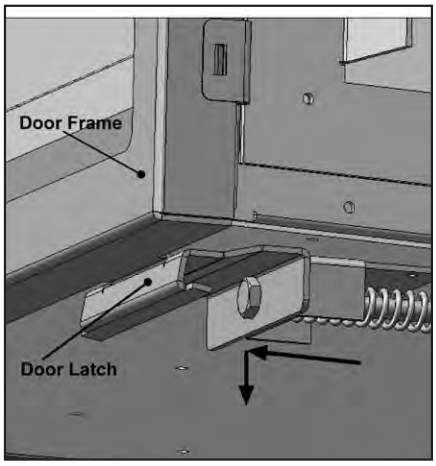

Figure 47: Door Latch Locations.

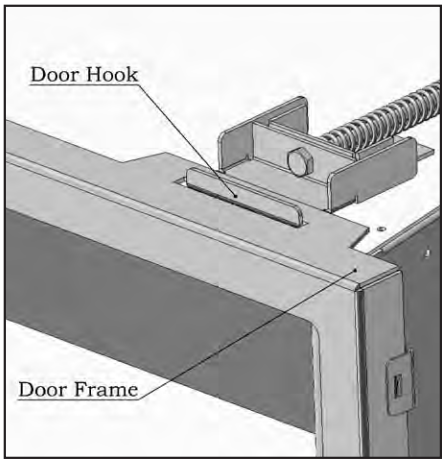

Figure 48: Top Door Hook.

ELECTRICAL HOOK-UP:

An electrical junction box is provided and fastened to the right side of the fireplace. Power needs to be brought to the electrical junction box. The power for the various control components are all provided from the fan control module. Install the provided electric outlet and cover and plug the the fan control module into it. See the Rating Label for the listed electrical requirements.

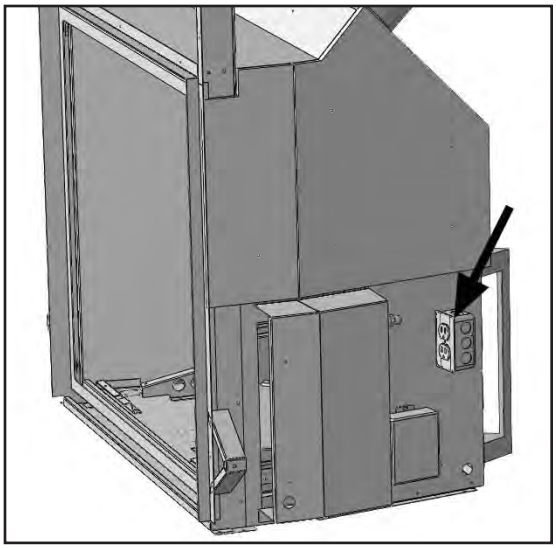

Figure 49: Location of Electrical Hook-Up.

Installation Set-Up

Gas Hook-Up:

The DV48 is equipped from factory with a ½" SAE 45° male gas fitting. This fitting will fit commonly used flexible gas supply lines.

If your local code requires you to use only rigid pipe for gas supply, remove the flare fitting provided. The gas line the flare fitting is fastened to is a ⅜" MPT.

You can then use a common union to provide the gas connection to the appliance.

The dimensions shown in Figure 50 are for your convenience if you have to hard pipe directly to the unit.

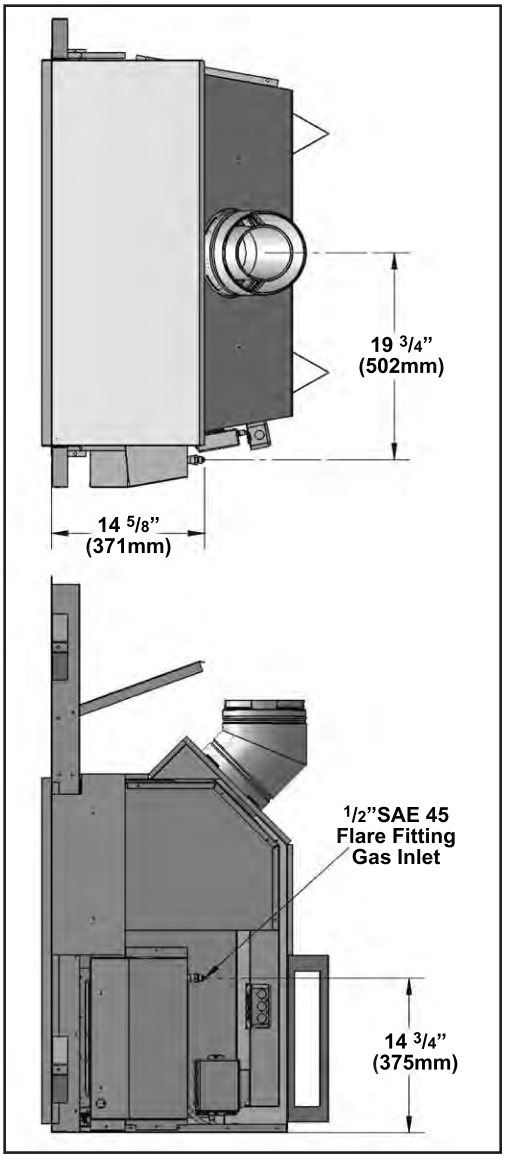

Figure 50: Location of Gas Hook-Up.

LP Gas Conversion:

1. If the unit has already been connected to a gas supply, shut off the gas supply to the unit.
2. If the unit has been run, shut off and allow cooling to room temperature.

- **Warning: Only a qualified gas service technician should install this LP or NG gas conversion kit.**
- **Warning: Only use a gas conversion kit supplied by the manufacturer for this appliance. Serious injury or death may result from improperly installed conversion kits.**



Figure 51: Removing the hood.

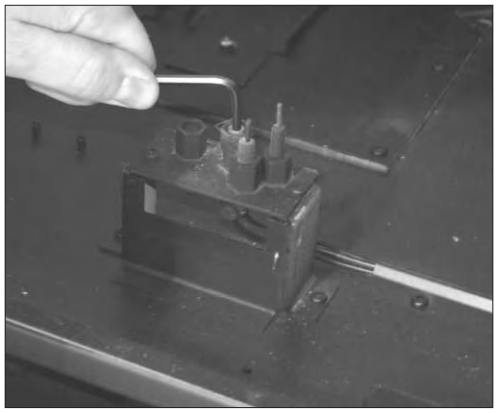

Figure 52: Removing the Pilot Orifice.

3. Remove the fireplace door. (see DOOR REMOVAL AND INSTALLATION).
4. Remove the burner, burner accents and firebox liners. (see each applicable section in this manual)
5. The pilot hood is held in with spring pressure. Remove the hood by pulling it directly up from the pilot assembly (Figure 51).

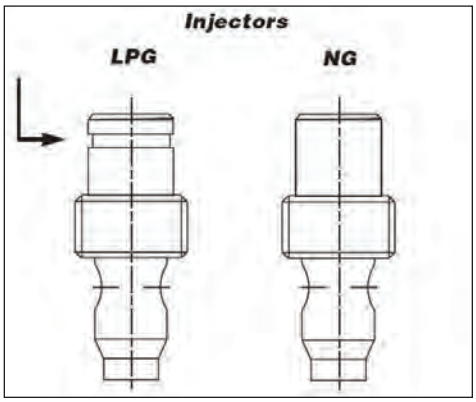

Figure 53: Identifing the Orifice.

6. Insert a 3/32" or 4mm Allen wrench into the top of the pilot orifice. Remove it by rotating it counter clock wise until it is free of the pilot assembly (Figure 52).
7. Ensure that the pilot orifice you are about to install is the correct orifice. LP orifices have a groove cut around the top of the orifice. See Figure 53 for help to identify these parts. The orifice size is stamped into the orifice. The correct orifice sizes for the DV48 are:

LPG	**35**
NG	**62**

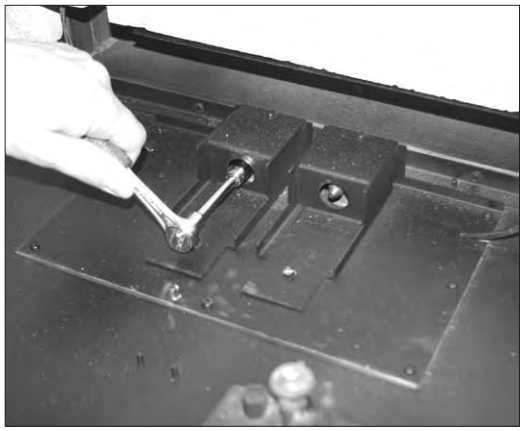

Figure 54: Removing the Gas Orifices.

8. Install the correct orifice and replace the pilot hood. The pilot hood has an indexing notch which must be align with the pilot base. Make sure the pilot hood is properly located and that the spring holding the pilot hood is properly engaged. Delayed ignition may be the result of an improperly installed pilot hood.
9. Using a 3/8" socket wrench, remove both gas orifices from the orifice mounting brackets at the rear floor of the firebox (Figure 54).
10. Use only the gas orifices that were included in the LP gas conversion kit supplied by the manufacturer. The correct orifice sizes for the DV48 are shown in Table 5.



Figure 55: Removing the Right Burner Support.

Table 5: Correct Orifice Sizes for the DV48

Burner	Left (front)	Right (rear)
Glass Tray NG	43	41
Glass Tray LP	55	55
Log Burner NG	43	41
Log Burner LP	55	53

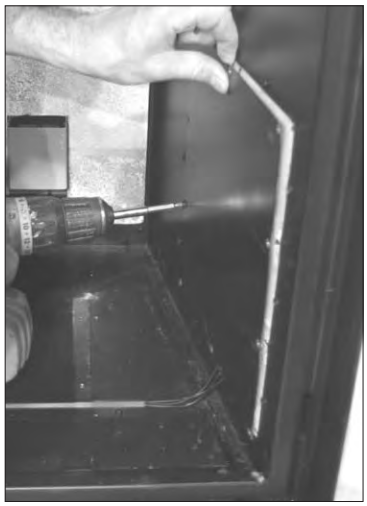

Figure 56: Removing Access Cover.

11. Using a T-20 driver, remove the Right Burner Support (Figure 55).
12. Remove the Valve Access Cover by removing all ten (10) T-20 screws (Figure 55).
13. Using a T-20 safety driver, remove the two (2) screws that hold the servo regulator from the gas valve (Figure 57).

14. Remove the rubber diaphragm that is situated between the servo regulator and the valve body.
15. Install the LP servo regulator included in the LP conversion kit, supplied by you dealer for the DV48.
16. If the fuel delivery pressure or the manifold pressure is to be verified, it can be done at this stage.
    a. Loosen the pressure tap screw.
    b. Place a ¼" silicone tube over either pressure port on the valve. Attach the tube to a monometer.
    c. Install a burner in the firebox (see burner installation section)
    d. Being careful to route the silicone tube away from the burner, test fire the unit for only long enough to establish the pressure reading.
    e. <u>Make sure to close the test pressure point taps after testing.</u>
17. Re-install the Valve Access Cover, making sure that the wire harness is carefully tucked back into the valve compartment and that the pilot tube, igniter lead and flame proving wire are routed through the provisions in the Valve Access Cover and the Firebox opening.
18. Re-install the Right Burner Support.
19. Re-connect the fuel supply to the unit.
20. Re-install the Fireplace Panel Set, Burner, Burner Trim Kit, Grate, Logs or Glass Burner and Front Door.
21. Fire the unit to ensure correct operation and flame picture. Ensure the Split Valve and Flame Modulation works as described in the operations section of this manual.

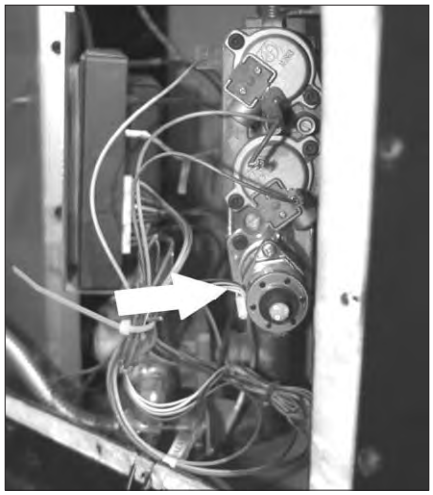

Figure 57: Servo Screws.

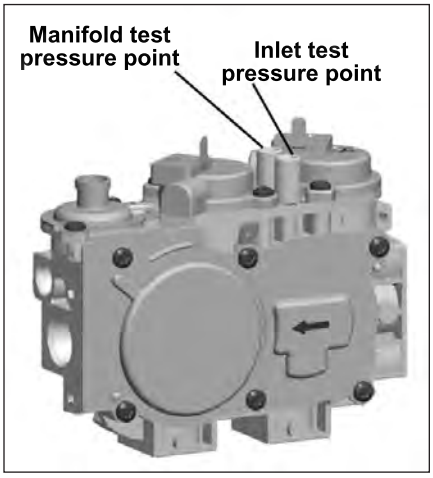

Figure 58: Pressure Test Points.

FIREBOX LINER INSTALLATION:

IMPORTANT: The paint on the panels may fade for the first 8-10 hours of burn time, but will come back to its color after the paint has curred. The paint is very delicate and handing them with care is nessesary not to mark or smuge the paint.

1. Prior to installing the firebox liners, you will need to ensure the Rear Brick Panel Support is in the correct position. The support is located at the back of the firebox (see Figure 59) and can be installed in two (2) positions. The upper position (using the lower screw holes) is for the October Panels. The lower position (using the upper screw holes) is for the Sandstone, Ledgestone, and Porcelain Panels. Remove the Support, if necessary, and move it to the appropriate placement.
2. Install the Rear Firebox Liner. This panel fits around the accent lights and rests on top of the Rear Brick Panel Support. It will stay in this location as you install the remaining panels. Refer to Figure 60.
3. Install the Left Firebox Liner Panel; it sits on the bottom front edge of the firebox (see Figure 61 & 62), a support

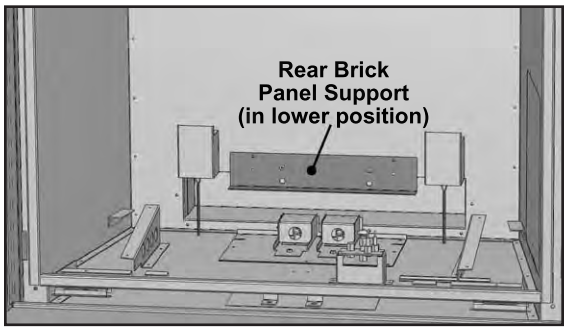

Figure 59: Rear Brick Panel Support.



Figure 60: Rear Firebox Liner Panel in Place.

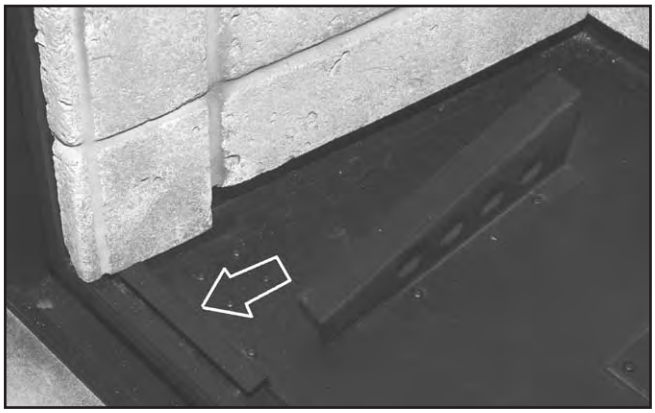

Figure 61: Left Firebox Liner Panel on Front Edge of Firebox.



Figure 62: Left Firebox Liner Panel in Place.

bracket at the lower rear of the firebox, and is held in by a retainer at the top of the firebox. Adjust the panel retainers as required.

4. Install the Top Panel by placing it on top of the Rear Panel and behind the Left Panel (see Figure 63). Hold it with one hand or have someone else hold it for you while you place the last panel. WARNING: If this panel falls from this location it will possibly break or the paint work will become chipped.

5. Place the Right Firebox Liner Panel in the same manner used for the Left Panel (see Figure 64). The vertical edges of the left and right panels should line up with the front edges of the firebox sides. The side panels rest up against the back panel and hold the top panel in position.



Figure 63: Top Firebox Liner Panel in Place.



Figure 64: Right Firebox Liner Panel in Place.

LOG BURNER / EMBER BED INSTALLATION:

1. Use the two (2) T-20 screws provided; install the rear burner shield onto the back of the burner. The mounting holes are just above the mixing tubes at the rear of the burner, refer to Figure 65.

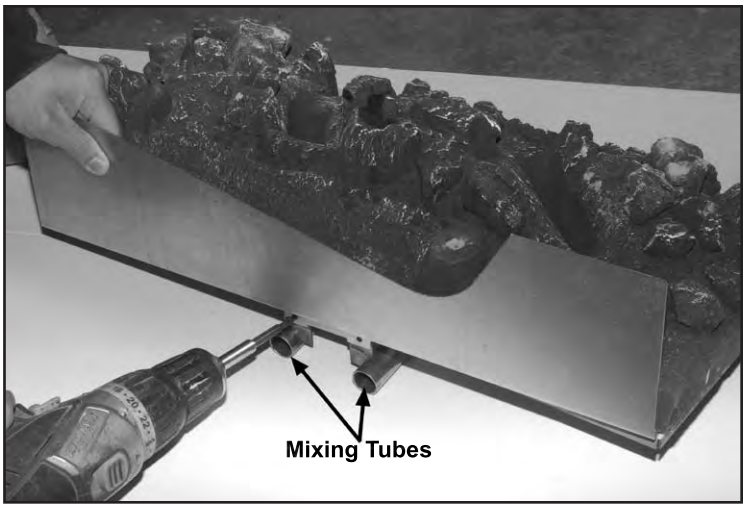

Figure 65: Installing Rear Burner Shield.

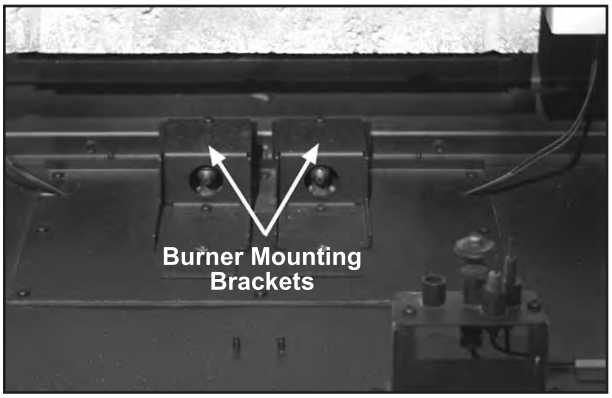

Figure 66: Burner Mounting Brackets.

2. In the bottom rear of the firebox there are two (2) gas orifices in a housing that facilitate the air shutter mechanisms and the Burner Mounting Brackets are above them (See Figure 66). There are two (2) mixing tubes underneath the back of the burner (see Figure 65). Lift the burner into the firebox with the back of the burner tilted the burner downward. Keep the burner high enough at the front to clear the pilot assembly. Line up the mixing tubes with the holes in the burner mounting brackets and slowly lower the front of the burner over the pilot assembly (see Figure 67).

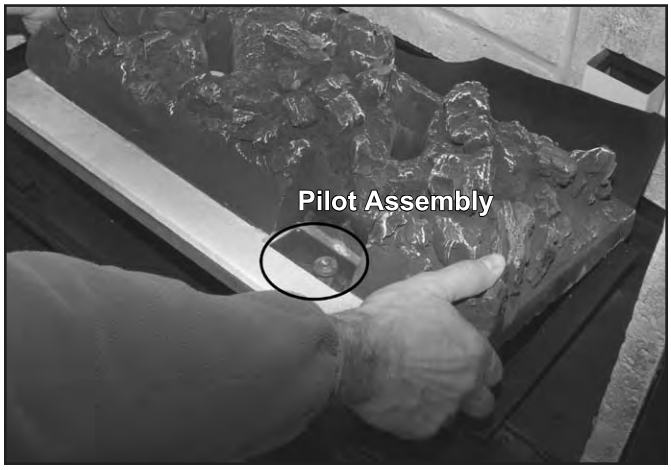

Figure 67: Log Burner Over Pilot Assembly.

3. Pull the burner forward up to the angular brackets near the front of the firebox (see Figure 68).

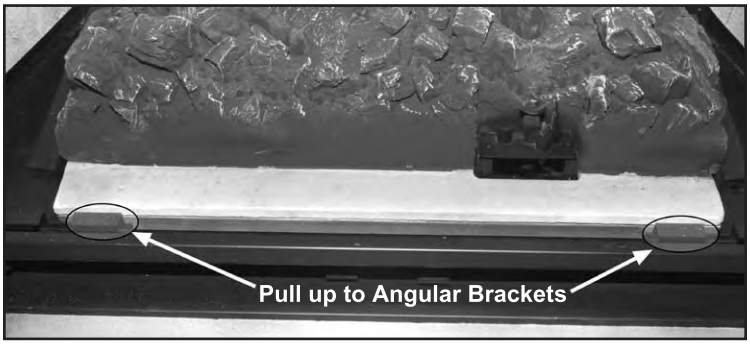

Figure 68: Log Burner in Place.



Figure 69: Burner Accents Pieces in Place.

IMPORTANT: If the burner is not far enough back to lower the burner behind these brackets, then the mixing tubes are not engaged in the air shutter. Failing to ensure the mixing tubes are located in the mixing tube support brackets may cause serious performance and or safety issues.

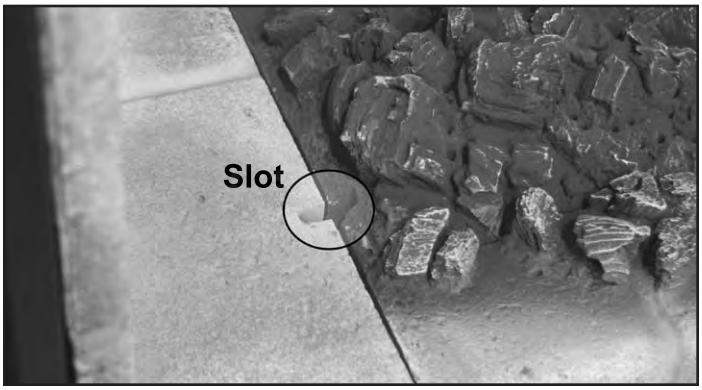

Figure 70: Slot for Firebox Grate.

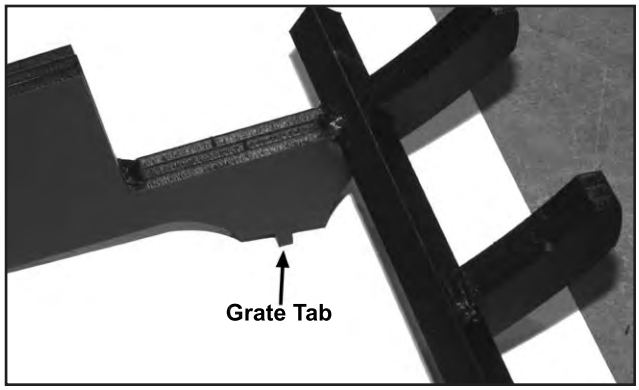

Figure 71: Tab on Firebox Grate.

4. Install the burner accent pieces as shown in Figure 69. There are a left, a right and a front ceramic trim. On each side of the burner and on the inside of each burner side accent pieces there is a slot, which should be aligned in order to position the log grate correctly (see Figure 70).
5. The firebox grate has two (2) tabs that run below the feet of the grate (see Figure 71), place the grate over the burner top and carefully inserting the grate tabs into the slots on the burner (see Figure 70 & 72). Once the grate is installed correctly, the burner, grate, and side burner accents will be all locked together.

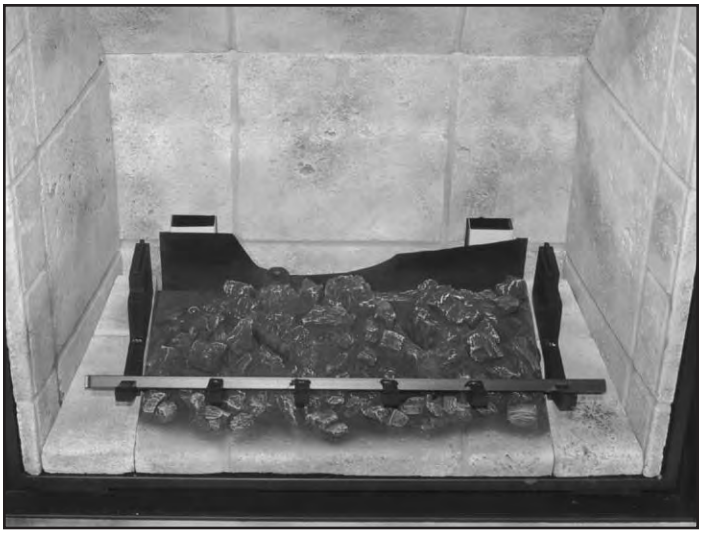

Figure 72: Firebox Grate in Place.

LOG SET INSTALLATION:

IMPORTANT: The paint on the logs may fade for the first 8-10 hours of burn time, but will come back to its color after the paint has curred. The paint is very delicate and handing them with care is nessesary not to mark or smuge the paint.

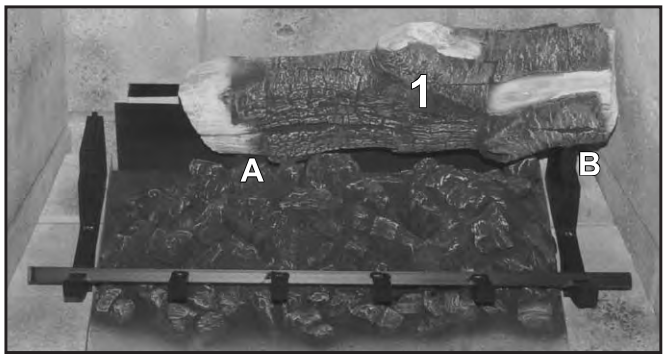

Figure 73: Log 1 in Place.

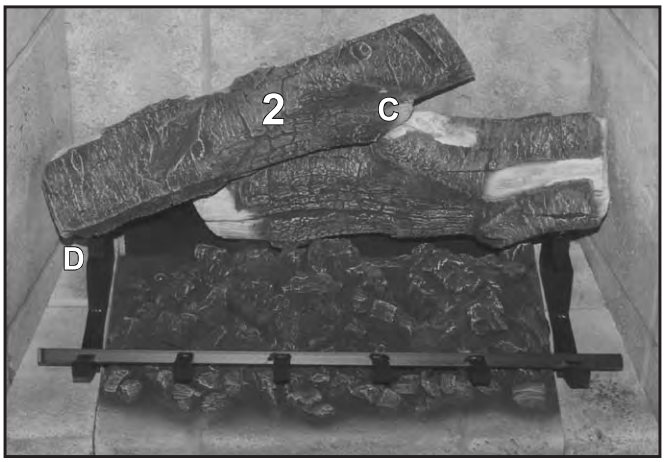

Figure 74: Log 2 in Place.

1. Install Right Rear Log. The right side sits on the grate with the groove on the bottom of the log fitting onto the top of the grate (see Figure 73). Insert the log pin into the top of the ember burner (see A in Figure 73). Align the log front edge with the front section of the grate (see B in Figure 73).

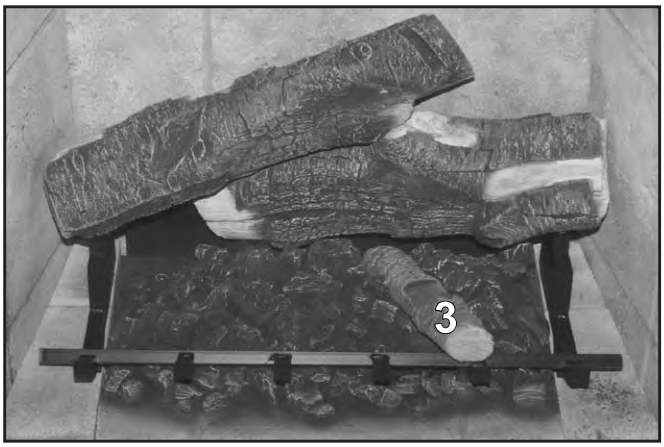

Figure 75: Log 3 in Place.

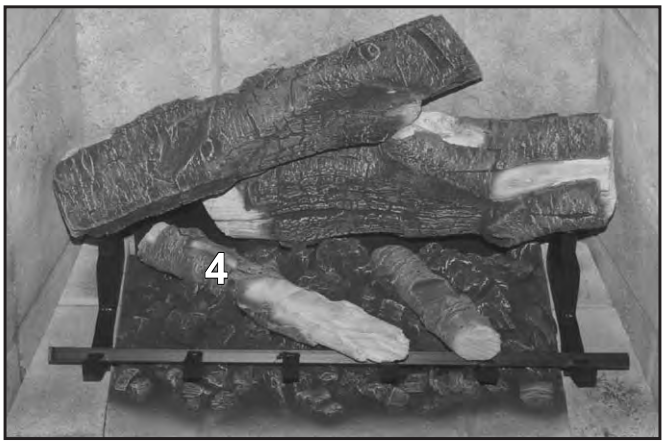

Figure 76: Log 4 in Place.

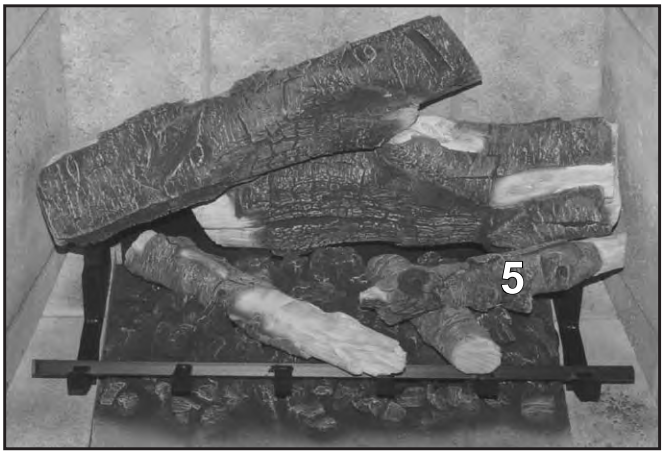

Figure 77: Log 5 in Place.

2. Install Left Rear log with the right side son the grate, using a groove on the bottom of the log to index itself to the grate (see Figure 74). The right side self locates on the first log. Alignment notches are provided for locating the centre area (see C in Figure 74). Align the front edge of the log with the upright section of the log grate (see D in Figure 74).
3. Insert Log 3 into the groove on the burner top. The groove has a stop at the rear to position the log properly from front to back. Refer to Figure 75.
4. Log 4 sits in a groove molded into the top of the burner top. See the details in Figure 76 showing the indexing key on this log.
5. Install Log 5 with the right side resting on the grate and the right side right up against the right hand firebox liner. The left side sits on a flat section in Log 3. Refer to Figure 77.

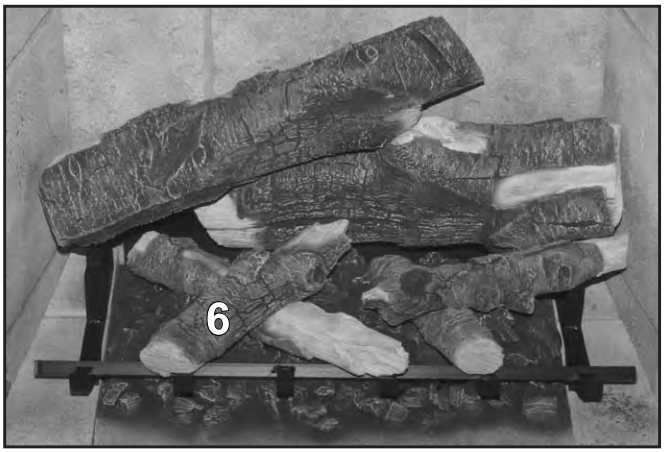

Figure 78: Log 6 in Place.

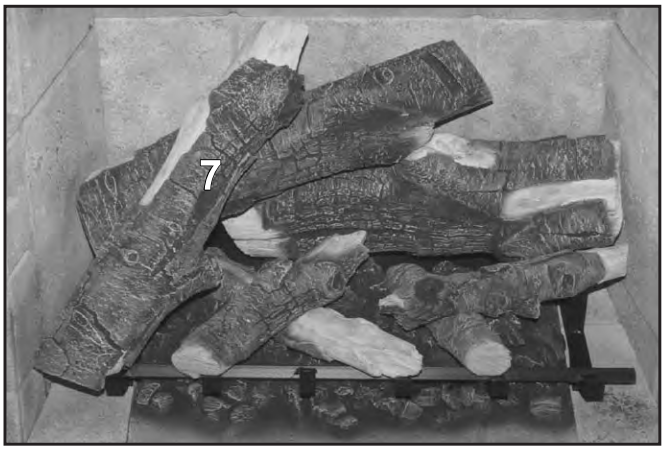

Figure 79: Log 7 in Place.

6. Install Log 6 by resting it across the flat section of Log 5 and locating the front edge across the grate finger as shown in Figure 78.
7. Log 7 sits in between the left panel and the left grate finger and cross the bar of the grate (see Figure 79). There is a notch across Log 2, which this log will locate into. The edge along the back of this log will index into the notch of Log 2.



Figure 80: Log 8 in Place.

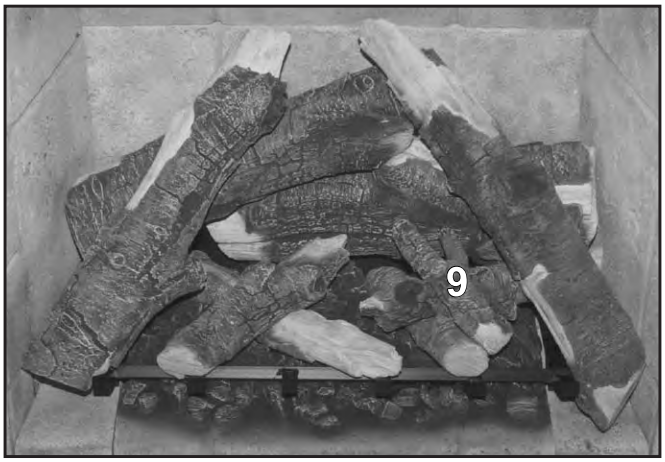

Figure 81: Log 9 in Place.

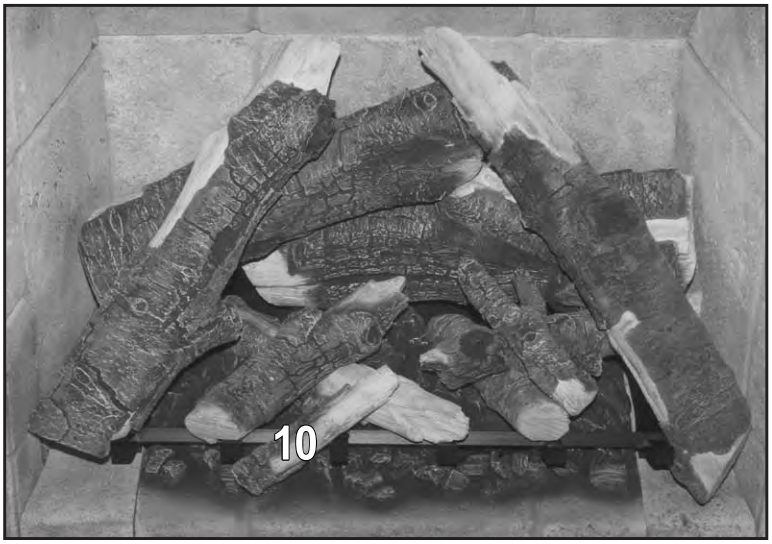

Figure 82: Accent Twig in Place.

8. Situate Log 8 between the right grate finger, the right firebox liner and the grate cross bar (see Figure 80). On the back of the log near the top end is a ceramic pin, this pin sits into a groove on the top of Log 2.
9. Sit the Y shaped Log 9 across Log 4 and 5 as shown in Figure 81.
10. The final little Accent Twig sits on the front ceramic burner accent and the grate finger as shown in Figure 82.

NOTE: Due to the variances in quality of gas and location of the logs, there may be some discoloration of the logset.

GLASS BURNER INSTALLATION:

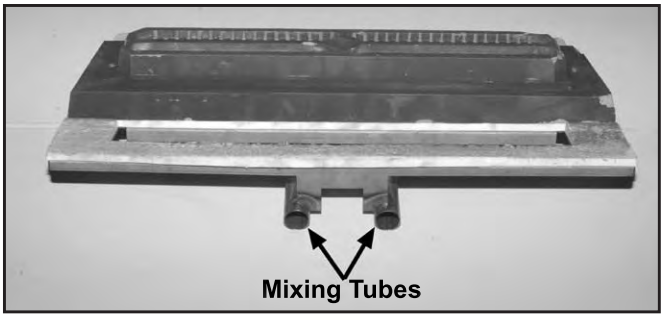

Figure 83: Mixing Tubes in Glass Burner.



Figure 84: Placing Glass Burner.

1. In the bottom rear of the firebox there are two (2) gas orifices in a housing that facilitate the air shutter mechanisms and the Burner Mounting Brackets are above them (See Figure 67). There are two (2) mixing tubes underneath the back of the burner (see Figure 83). Lift the burner into the firebox with the back of the burner tilted the burner downward. Keep the burner high enough at the front to clear the pilot assembly. Line up the mixing tubes with the holes in the burner mounting brackets and slowly lower the front of the burner over the pilot assembly (see Figure 84).

2. Pull the burner forward up to the angular brackets near the front of the firebox (see Figure 85). The burner rests on the floor of the firebox and is properly aligned against the two (2) front burner rests.

   IMPORTANT: If the burner is not far enough back to lower the burner behind these brackets, then the mixing tubes are not engaged in the air shutter. Failing to ensure the mixing tubes are located in the mixing tube support brackets may cause serious performance and or safety issues.

3. Place the glass tray over top of the burner top as shown in Figure 86. It simply rests over the top section of the burner.

4. In front of the pilot assembly, on the front edge of the burner is one burner port which helps in the lighting of the main burner (see Figure 85). The glass tray has one hole in the same position that allows the gas to flow to this location. Ensure the glass tray hole is properly positioned over the port in the burner.

5. The DV48 glass burner option is supplied with two (2) quantities of glass, black and white. There is enough of either to fill the burner, so you can decide whether to install all white, all black, or some type of mixture (example in Figure 87). Fill the glass burner tray to the top. Try to keep glass from falling in around the pilot assembly.

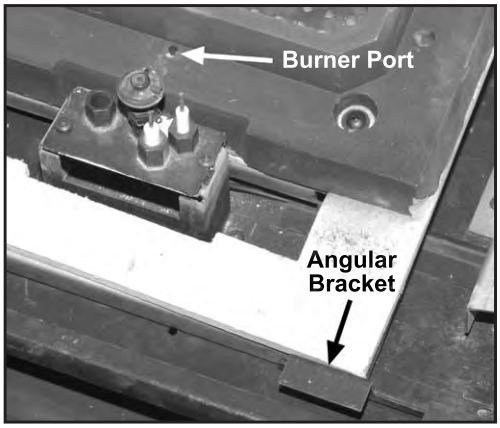

Figure 85: Glass Burner in Place.

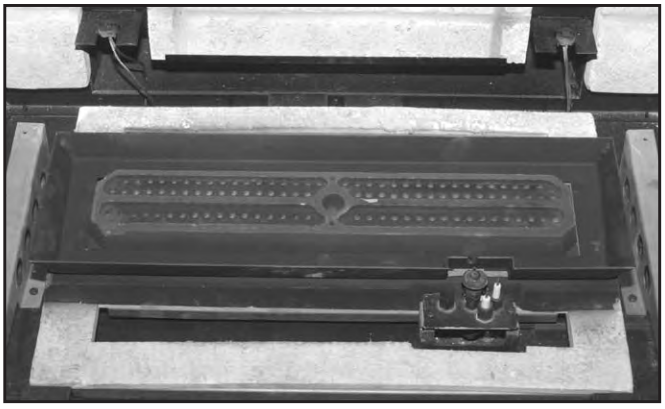

Figure 86: Glass Tray over Burner.

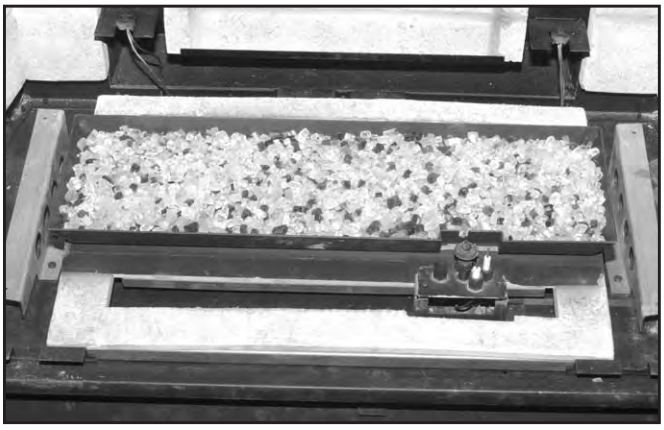

Figure 87: Glass Tray with Mixed Glass.



Figure 88: Burner Trim Being Placed.



Figure 89: Burner Trim in Correct Position.



Figure 90: Proper Gap Between The Glass Tray And The Burner Trim.

6. Gently place the burner trim piece around the burner (see Figure 88). It sits on various support brackets and fits around the burner tray and up against the firebox liner. Figure 89 shows the burner trim in the correct position. Ensure a minimum ⅜" (8mm) gap is maintained around the burner glass tray (see Figure 90).
7. If the optional rock accent kit was purchased for the DV48, you can place the rocks in a random pattern around the glass tray. A few can straddle the ⅜" (8mm) gap around the glass tray. Try to keep them looking randomly placed. Keep from placing them in large piles as they need to be evenly distributed. Examples are shown in Figure 91 & 92.

   It is important that rock accents are not placed in front or over the pilot assembly. This may prevent the burner from lighting in a timely fashion or overheat the pilot assembly. Keep an area of about 3" (75mm) in front of the pilot light free from obstruction and rock accents (see Figure 93).

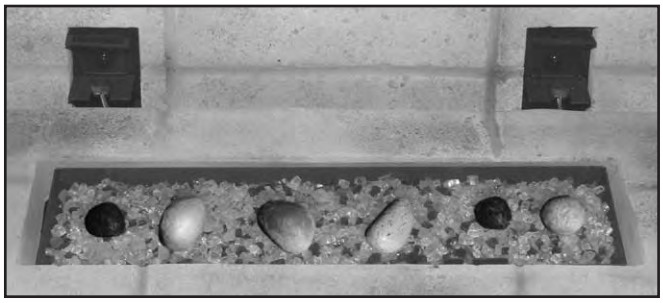

Figure 91: Example of Rock Placement - Single Kit.



Figure 92: Example of Rock Placement - Multiple Kits.

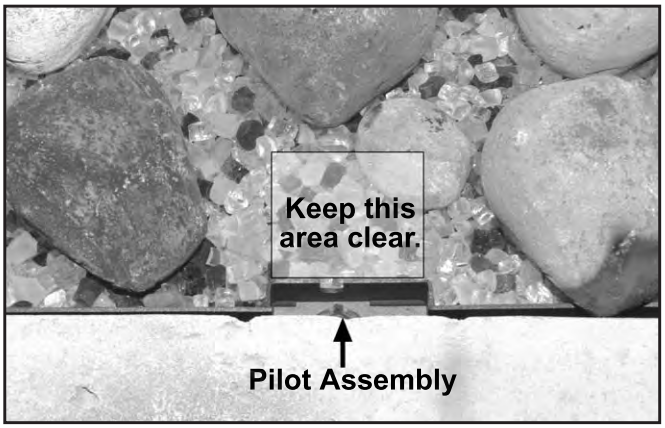

Figure 93: Keep Area in Front of Pilot Assembly Clear.

PORCELAIN PANEL KIT INSTALLATION:

1. Install the porcelain Light Covers over the Light Cover Base. The tabs on the back of the Light Cover slide down behind the Light Cover Base. Refer to Figures 94 & 95.
2. Ensure the Rear Brick Panel Support is in the lower position. The support is located at the back of the firebox (see Figure 59). Remove the Support, if necessary, and move it to the appropriate placement.
3. Install the Rear Firebox Liner. This panel rests on top of the accent lights and Rear Brick Panel Support. It will stay in this location as you install the remaining panels. Refer to Figure 96.

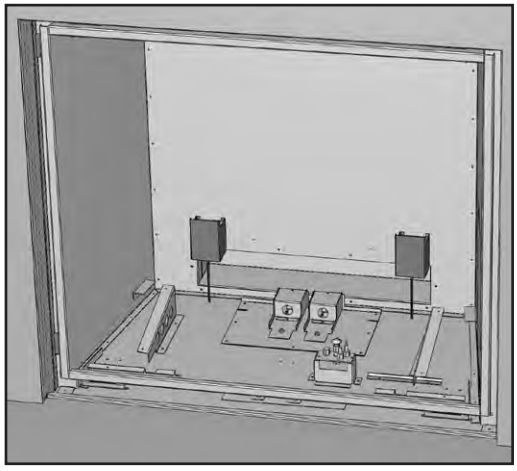

Figure 94: Porcelain Light Covers in Place.

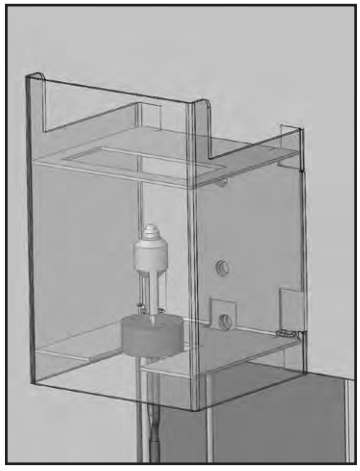

Figure 95: Porcelain Light Covers Close-up.

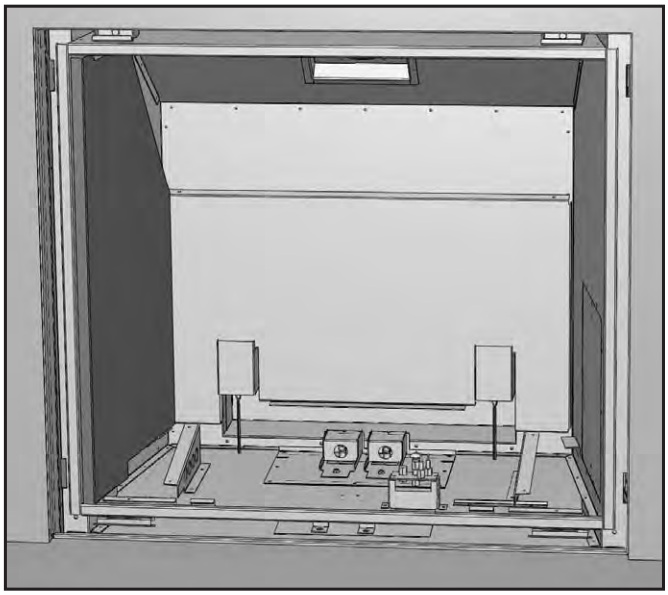

Figure 96: Rear & Left Porcelain Panels in Place.

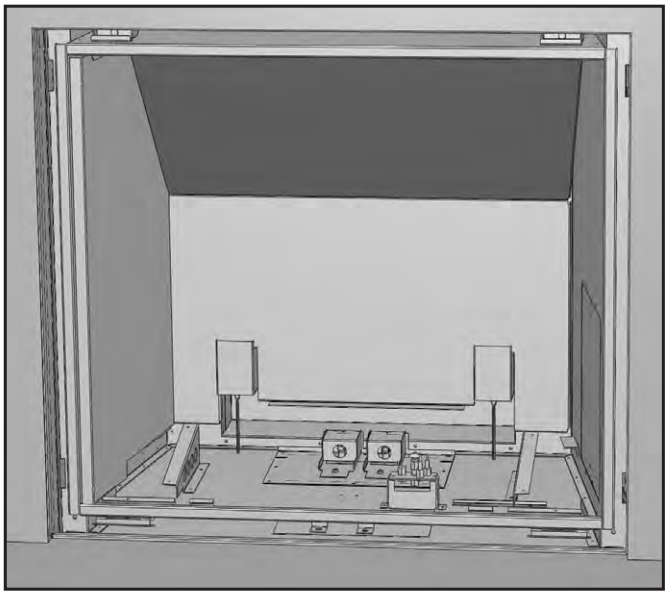

Figure 97: Top Porcelain Panel in Place.

4. Install the Left Firebox Liner Panel; it sits on the bottom front edge of the firebox (see Figure 96), a support bracket at the lower rear of the firebox, and is held in by a retainer at the top of the firebox. Adjust the panel retainers as required.
5. Install the Top Panel by placing it on top of the Rear Panel and behind the Left Panel (see Figure 97). Hold it with one hand or have someone else hold it for you while you place the last panel. WARNING: If this panel falls from this location it will possibly break or the paint work will become chipped.

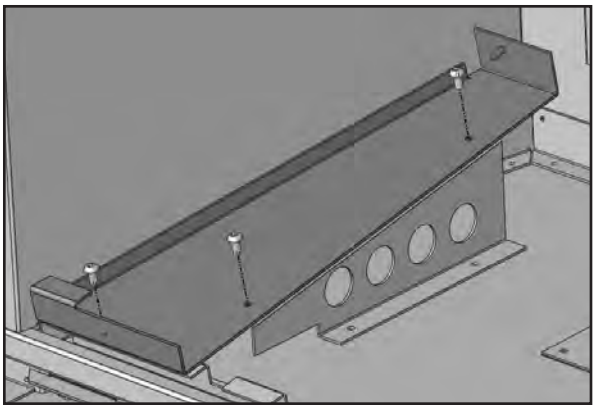

Figure 98: Installing Left Burner Cover Support.

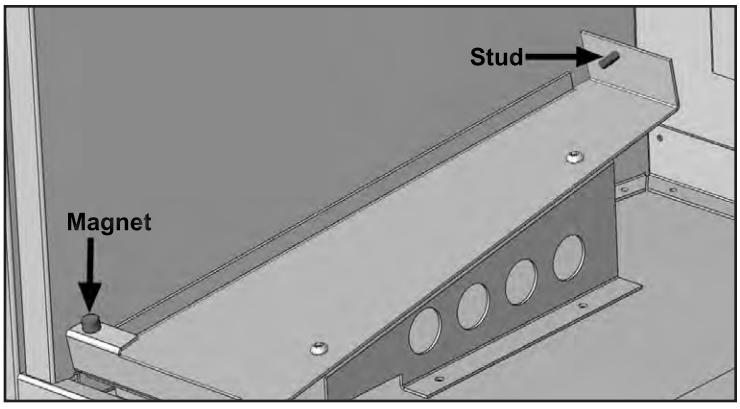

Figure 99: Permanent Magnet on Left Burner Cover Support.

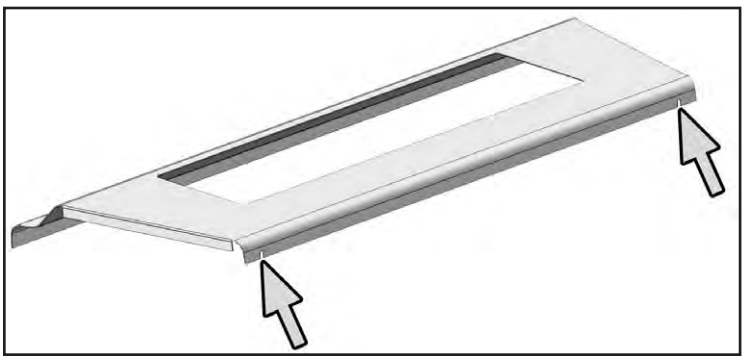

Figure 100: Slots in Back of Burner Cover.

6. Place the Right Firebox Liner Panel in the same manner used for the Left Panel. The vertical edges of the left and right panels should line up with the front edges of the firebox sides. The side panels rest up against the back panel and hold the top panel in position.
7. Install the Left Burner Cover Support as shown in Figure 98. This bracket is installed using three (3) T-20 Torx screws supplied. Install the Right Burner Cover Support Right as you've done on the left side.

8. Place one of the Permanent Magnets provided on the front edge of the Burner Cover Supports as shown in Figure 99.
9. Install the Burner Assembly; refer to Step 1 & 2 of GLASS BURNER INSTALLATION.
10. Place the Ceramic Burner Front on top of the Burner Cover Supports as shown in Figure 101. This part should be pulled forward until it contacts the metal brackets in the front.

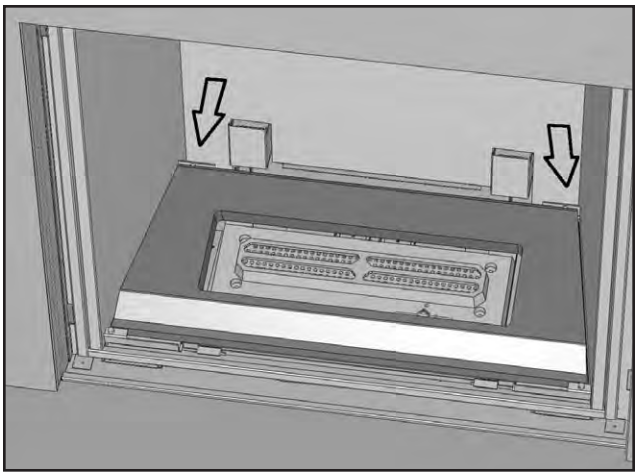

Figure 101 Installing Burner Cover.

11. The Burner Cover has two (2) slots, one the either side of the rear flange (refer to Figure 100). These slots fit over the two (2) studs in the firebox (refer to Figure 99) to keep it in place.

    The arrows in Figure 101 point at the studs that hold the Burner Cover in position. Place the Burner Cover over the pins and then once aligned with the holes, push the Burner Cover back towards the rear of the firebox. The front of the Burner Cover is held in place by the permanent magnets installed in step 8.

12. Install the Glass Tray and the Glass to complete the installation of the Porcelain Panel Kit, refer to Step 3, 4, 5, & 7 of GLASS BURNER INSTALLATION.

OPTIONAL FRONT INSTALLATION:

There are many different styles of optional fronts available for your fireplace. These fireplace fronts hang onto the front of your fireplace using four (4) hooks, one on each corner (refer to Figure 102). These hooks secure the front to the fireplace, providing for easy removal for service access to the fireplace and also to position the front the proper distance away from the glass door and the fireplace facing.

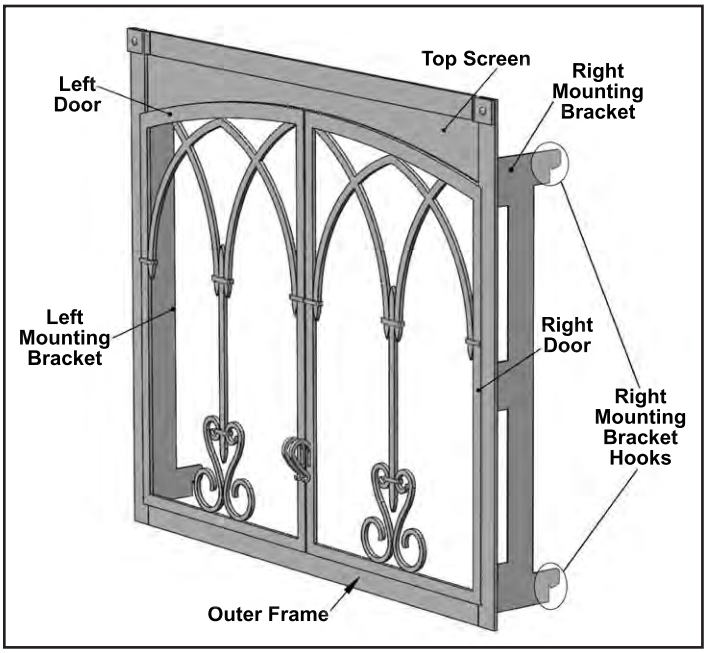

Figure 102: Optional Front Parts.

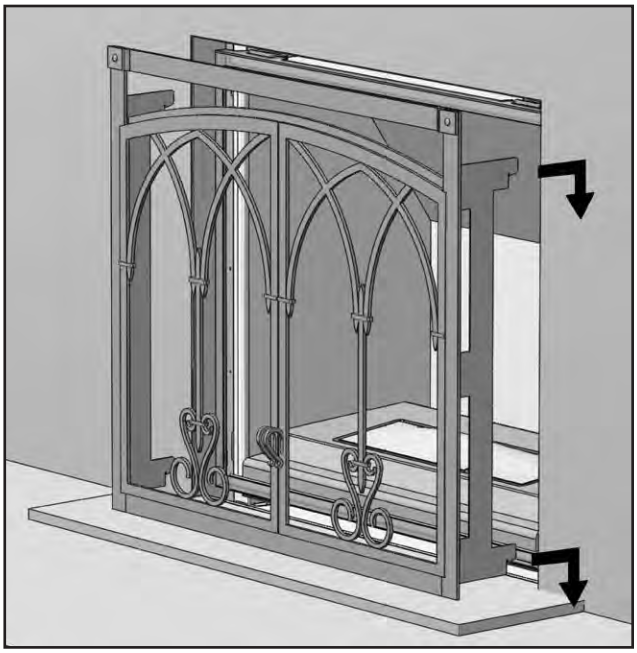

Figure 103: Optional Front Being Installed.

Install the front by lifting it parallel to the fireplace with the mounting bracket hooks pointing towards the fireplace. Slide the hooks all the way into the slots between the Glass Door Frame and the drywall flanges of the fireplace. Pull down on each corner to make sure the hook is engaged with the hanger. Refer to Figures 102 & 103.

IMPORTANT: Ensure that the minimum gap required between the Optional Front and wall of the unit is maintained (refer to Figure 104). Not maintaining the proper gap will cause the unit to run at elevated temperatures and result in an unsafe condition

The face should be cleaned before the fireplace is turned on for the first time.

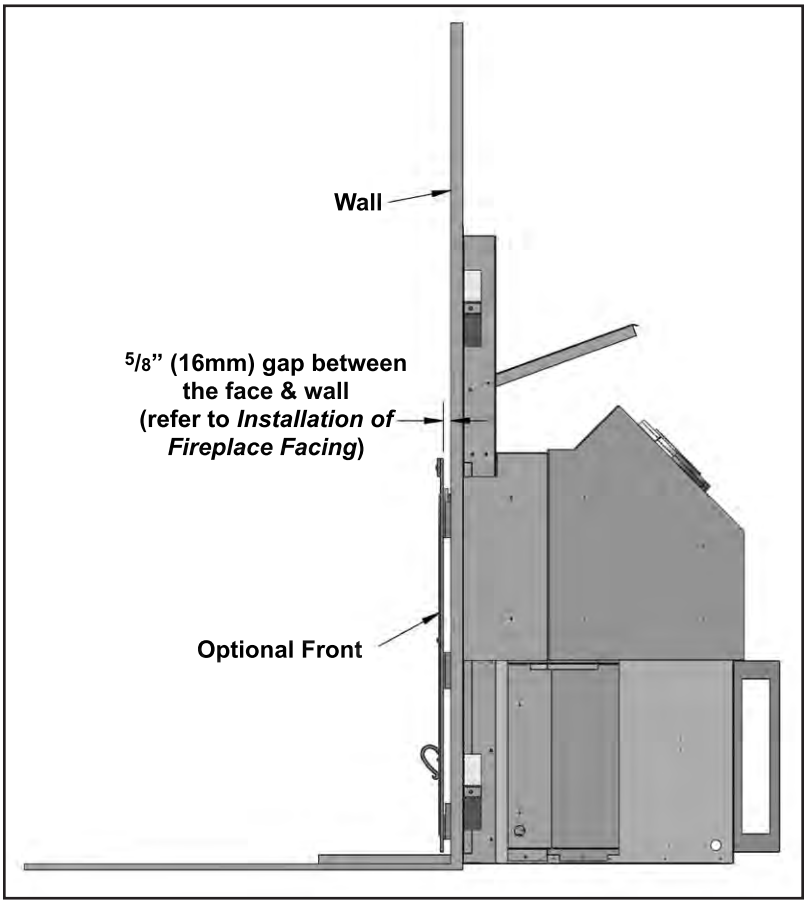

Figure 104: Optional Front Installed.

NORMAL SOUNDS DURING OPERATION:

Table 6: Normal Sounds

Component	Sound & Reason
DV48 & Fascia	Creaking when heating up or cooling down.
Burner	Light pop or poof when turned off; this is more common with LP units.
Pilot Flame	Quiet whisper while the pilot flame in on.
Gas Control Valve	Dull click when turning on or off, this is the valve opening and closing.

REMOTE CONTROL OPERATIONS:

The Proflame GTMF is a modular remote control system that directs the functions of the DV48. The Proflame GTMF is configured to control the on/off main burner operation, its flame levels and provides on/off and Smart thermostatic control of the appliance. The system controls a remotely actuated 120V/60Hz power outlet, fan speed through six (6) levels and has a constantly powered 120V/60Hz power outlet.

WARNING

THE TRANSMITTER AND RECEIVER ARE RADIO FREQUENCE DEVICES. PLACING THE RECEIVER IN OR NEAR METAL MAY SEVERELY REDUCE THE SIGNAL RANGE.

ATTENTION!

- **TURN "OFF" THE MAIN GAS SUPPLY OF THE APPLIANCE DURING INSTALLATION OR MAINTENANCE OF THE RECEIVER.**
- **PLACE THE RECEIVER'S 3 POSITION SLIDER SWITCH IN THE "OFF" POSITION DURING INSTALLATION OR MAINTENANCE.**
- **TURN "OFF" MAIN GAS SUPPLY TO THE APPLIANCE PRIOR TO REMOVING OR REINSERTING THE BATTERIES IN THE RECEIVER.**
- **DURING APPLIANCE INSTALLATION/MAINTENANCE OR IN CASE OF REMOTE CONTROL MALFUNCTION TURN OFF THE FAN CONTROL MODULE USING THE "ON/OFF" MAIN POWER SWITCH ON THE FRONT PANEL OF THE FCM.**

TECHNICAL DATA

Transmitter (Remote Control):
Supply voltage 4.5 V (three 1.5 V AAA batteries)
Ambient temperature ratings 0 - 50 °C (32 - 122 °F)

Receiver:
Supply voltage 6.0 V (four 1.5 V AA batteries)

Fan Control Module:
Supply voltage/frequency: 120 V / 60 Hz
Aux switched output: 120 V / 60 Hz / 2 A
Fan speed output: 120 V / 60 Hz / 1 A

Start-Up & Operation

System Description:

The Proflame Remote Control System consists of three (3) elements:
1. Proflame Transmitter.
2. Proflame Receiver and a wiring harness to connect the Receiver to the gas valve, stepper motor and Fan Control Module.
3. Proflame Fan Control Module (FCM)

TRANSMITTER (Remote Control with LCD Display)

The Proflame Transmitter uses a streamline design with a simple button layout and informative LCD display (Figure 105). The Transmitter is powered by three (3) AAA type batteries. A Mode Key is provided to Index between the features and a Thermostat Key is used to turn on/off or index through Thermostat functions (Figure 105 & 106).

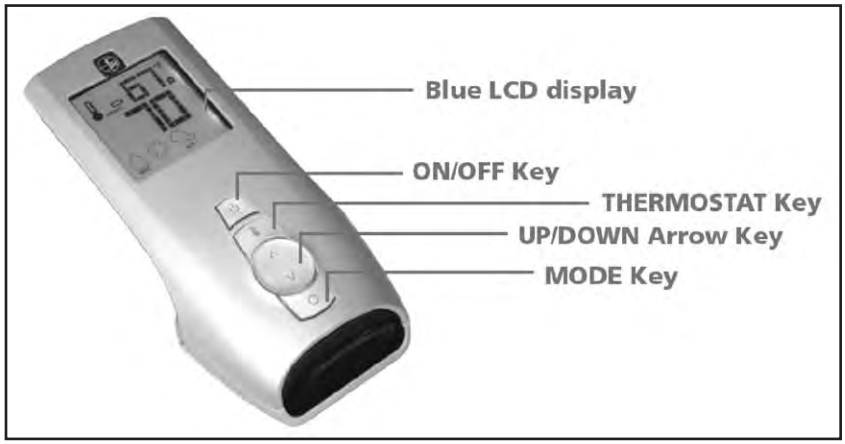

Figure 105: Proflame Transmitter.

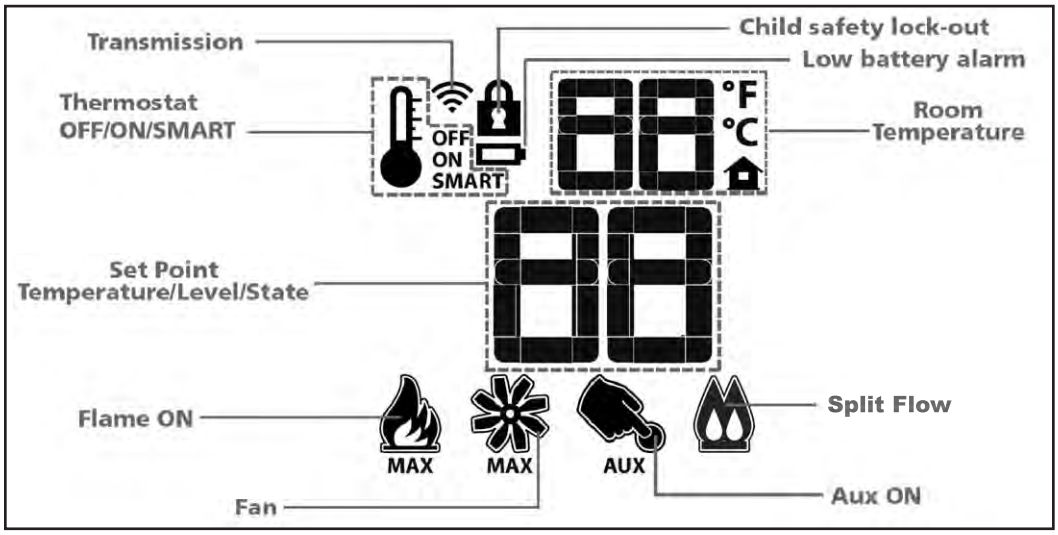

Figure 106: Proflame Transmitter LCD Screen.

RECEIVER

The Proflame Receiver (Figure 107) connects directly to the gas valve, stepper motor, DFC, and Fan Control Module with a wiring harness. The Receiver is powered by four (4) AA type batteries. The Receiver accepts commands via radio frequency from the Transmitter to operate the appliance in accordance with the particular Proflame system configuration. The Receiver three (3) position slider switch can be set to one of three positions: ON (Manual Override), Remote (Remote control), or Off.

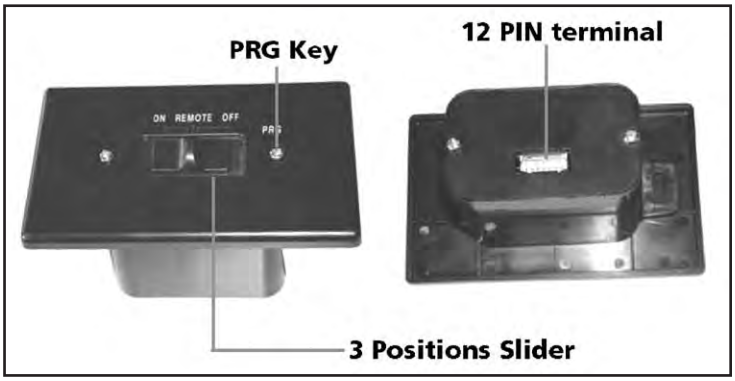

Figure 107: Proflame Receiver.

FAN CONTROL MODULE

Fan Control Module (FCM) offers the added ability to control the fan speed through six (6) speeds, a remotely actuated 120V outlet and a constantly powered 120V outlet. The FCM provides DC power to the Receiver allowing the batteries to be used only when line power is interrupted or lost (see Figure 108).

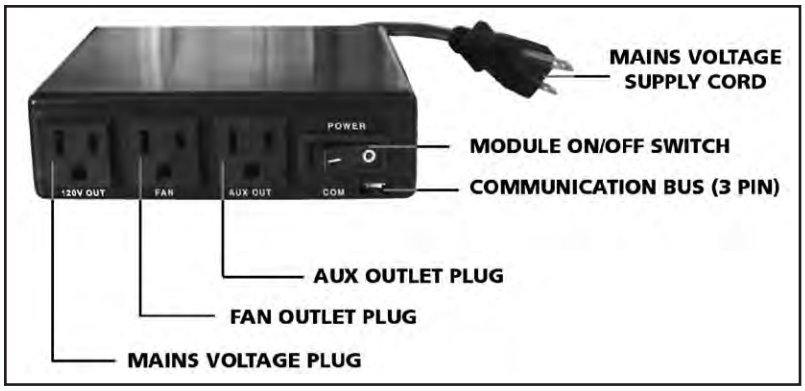

Figure 108: Proflame Fan Control Module.

WALL MOUNTING THE RECEIVER:

The receiver can be placed inside a standard Junction type wall box either by itself or in combination with a light dimmer control. This installation can take place up to 8'ft (2.4m) from the appliance control valve.

1. Connect the wiring harness to the back of the Receiver.

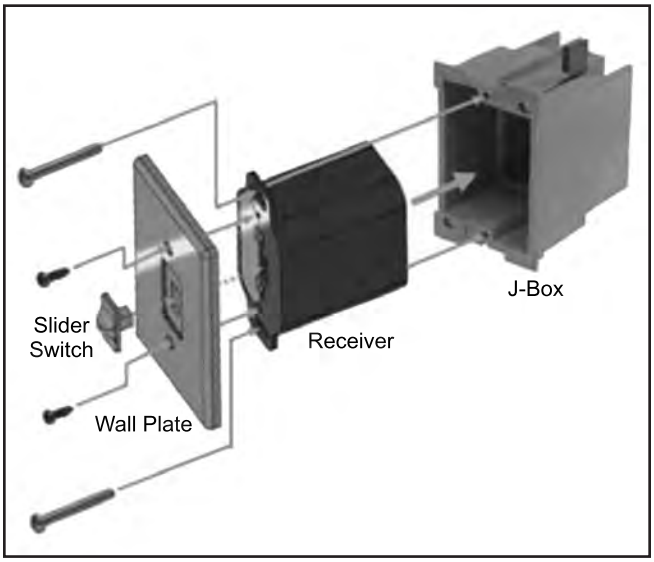

Figure 109: Wall Mounting the Receiver.

2. Install the Receiver in the Junction box using the existing J box screws (Figure 109).
3. Insert the four (4) AA type batteries in the battery compartment with the correct polarity.
4. Place the slider into the cover plate.
5. Put the Receiver switch in the "OFF" position.
6. Make sure the Receiver and cover plate words "ON" and "UP" are on the same side.
7. Align the slider with the switch on the Receiver and couple the switch into the slider.
8. Align the screw holes.
9. Using the two (2) screws provided secure the cover plate to the Receiver.

OPERATING PROCEDURE:

Initializing The System For The First Time

Install the four (4) AA batteries into the receiver battery bay. Note the polarity of the battery and insert into the battery bay as indicated on the Battery cover (+/-). Place the 3-position slider switch in the "Remote" position (see Figure 103). Using the end of a paper clip, or other similar object, insert the end of the paper clip into the hole marked "PRG" on the Receiver front cover (see Figure 107).

The Receiver will "beep" three (3) times to indicate that it is ready to synchronize with a Transmitter. Install the three (3) AAA type batteries in the Transmitter battery bay, located on the base of the Transmitter. With the batteries already installed in the Transmitter, push the 'ON' button. The Receiver will "beep" four (4) times to indicate the Transmitter's command is accepted and sets to the particular code of that Transmitter. The system is now initialized.

Temperature Indication Display

With the system in the "OFF" position, press the Thermostat Key and the Mode Key at the same time. Look at the LCD screen on the transmitter to verify that a °C or °F is visible to the right of the Room Temperature display (see Figure 110).

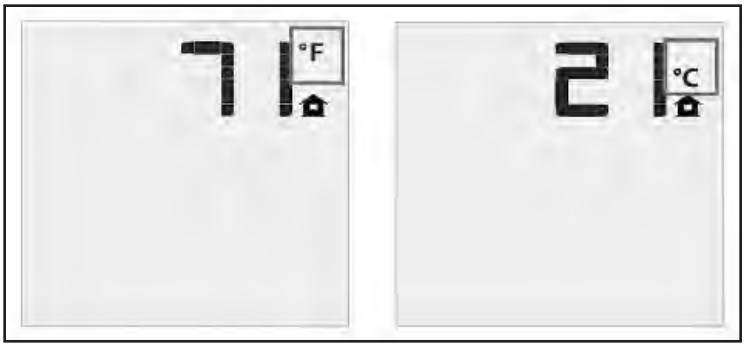

Figure 110: Remote Control Display in Farenheit and Celcius.

Turn on the Appliance

Press the ON/OFF Key on the Transmitter. The Transmitter display will show all active Icons on the screen. A single "beep" from the Receiver will confirm reception of the command and will commence to first ignite the pilot light, followed by the main burner. This should take about 10 seconds to complete.

Turn off the Appliance

Press the ON/OFF Key on the Transmitter. The Transmitter LCD display will only show the room temperature and Icon (see Figure 111). A single "beep" from the Receiver confirms reception of the command and both the pilot light (if the unit is not set to continuous pilot) and main burner will turn off.

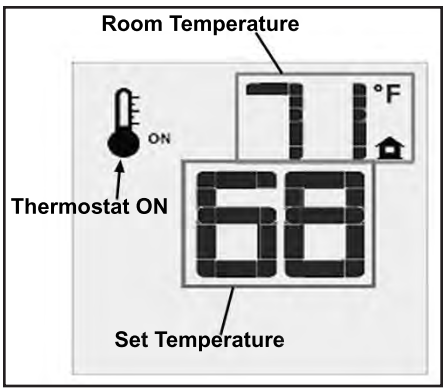

Figure 111: Remote Control Displays Set Temperature.

Room Thermostat (Transmitter Operation)

The Remote Control can operate as a room thermostat. The thermostat can be set to a desired temperature to control the comfort level in a room. To activate this function, press the Thermostat Key (see Figure 105). The LCD display on the Transmitter will change to show that the room thermostat is "ON" and the set temperature is now displayed (see Figure 111). To adjust the set temperature, press the Up or Down Arrow Keys until the desired set temperature is displayed on the LCD screen of the Transmitter.

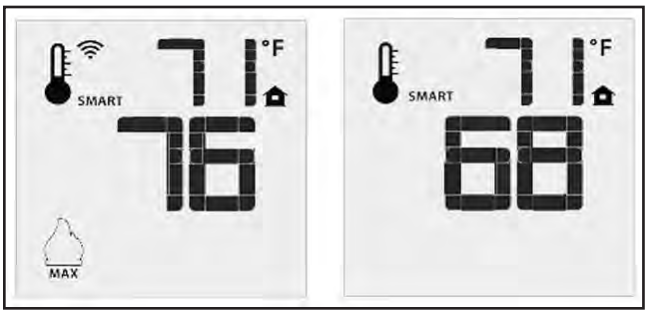

Figure 112: Remote Control's Smart Flame Function.

Smart Thermostat (Transmitter Operation)

The Smart Thermostat function adjusts the flame height in accordance to the difference between the set point temperature and the actual room temperatures. As the room temperature gets closer to the set point the Smart Function will modulate the flame down. To activate this function, press the Thermostat Key (Figure 105) until the word "SMART" appears to the right of the temperature bulb graphic (Figure 112). To adjust

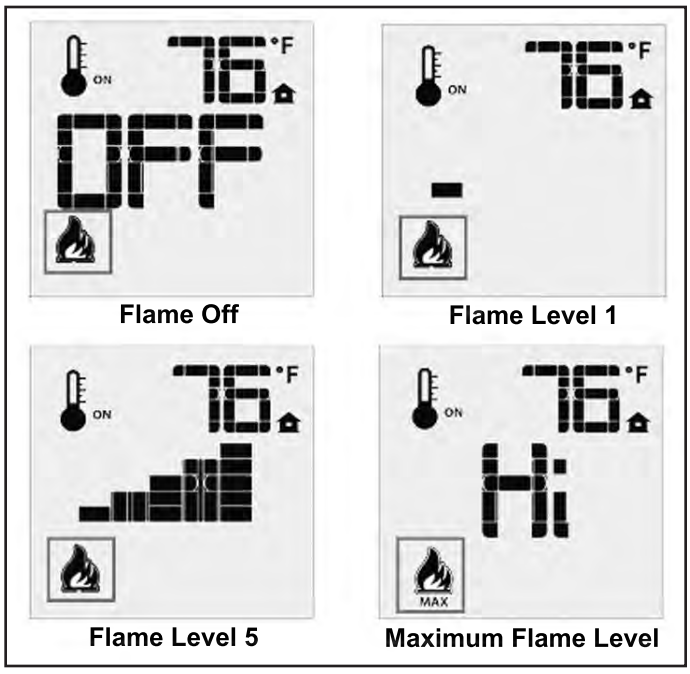

Figure 113: Remote Control's Flame Levels.

the set temperature, press the Up or Down Arrow Keys until the desired set temperature is displayed on the LCD screen of the Transmitter.

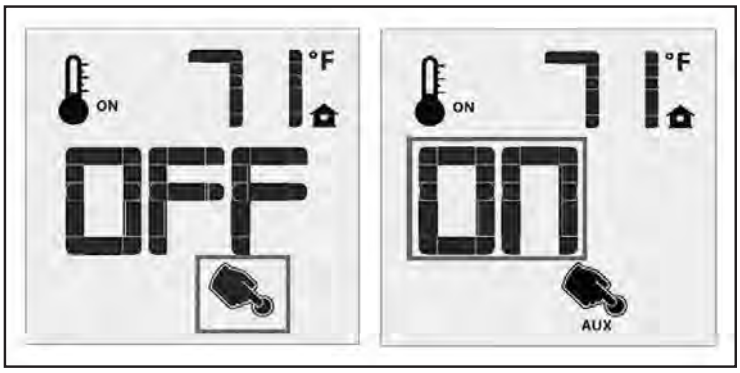

Figure 114: Remote Control with Aux for Accent Lights.

Remote Flame Control

The Proflame GTMF has six (6) flame levels. With the system on, and the flame level at the maximum in the appliance, pressing the Down Arrow Key once will reduce the flame height by one step until the flame is turned off. The Up Arrow Key will increase the flame height each time it is pressed. If the Up Arrow Key is pressed while the system is on but the flame is off, the flame will come on in the high position (refer to Figure 113). A single "beep" will confirm reception of the command.



Figure 115: Remote Control Locked.

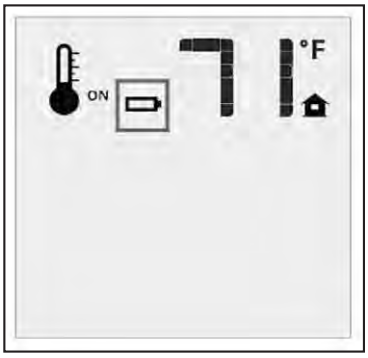

Figure 116: Low Battery Indicator.

Remote Actuated Accent Lights

The DV46 is shipped with two (2) firebox accent lights. They are connected to the auxiliary power outlet of the Proflame Fan Control Module. The lights can be turned on or off using the Auxiliary function on your remote control. Press the Mode Key on the remote control until the Auxiliary Function icon is highlighted. Pressing the Up or Down arrow keys will turn the accent lights on or off. See Figure 114 for the AUX icon details. A single "beep" will confirm the reception of the command.

Key lock

This function will lock the keys to avoid unsupervised operation. To activate this function, press the MODE and UP keys at the same time and the a lock will appear (see Figure 115). To de-activate this function, press the MODE and UP Keys at the same time.

Low Battery Power Detection

Transmitter: The life span of the remote control batteries depends on various factors: quality of the batteries used, the number of ignitions of the appliance, the number of changes to the room thermostat set point, etc. When the Transmitter batteries are low, a Battery Icon will appear on the LCD display of the Transmitter (see Figure 116) before all battery power is lost. When the batteries are replaced this Icon will disappear.

Receiver: The life span of the Receiver batteries depends on various factors: quality of the batteries used, the number of ignitions of the appliance, the number of changes to the room thermostat set point, etc. When the Receiver batteries are low, No "beep" will be emitted from the Receiver when it receives an On/Off command from the Transmitter. This is an alert for a low battery condition for the Receiver. When the batteries are replaced the "beep" will be emitted from the Receiver when the ON/OFF Key is pressed (See *Initializing The System For The First Time*).

Manual Bypass Of The Remote System

If the batteries of the Receiver or Transmitter are low or depleted, the appliance can be turned on manually by sliding the three position slider switch on the Receiver to the ON position. This will bypass the remote control feature of the system and the appliance main burner will come on.

Split Valve Operation

The split flow operation on the DV48 turns off the rear section of the burner, greatly reducing the heat output of the unit. If you'd like to have the fireplace on but would not like to have as much heat in the room, you can turn off this function. Press the bottom key of your remote repeatedly until the double flame icon is lit up (refer to Figure 117). By pressing the up or down key, turn the rear split valve to "on" or "off". The rear flame on the burner will turn on and off. This does not affect the flame setting of the remaining flame. Turning off the rear section of this burner may result in an extinguishing "pop", particularly if your fireplace is operating on propane gas

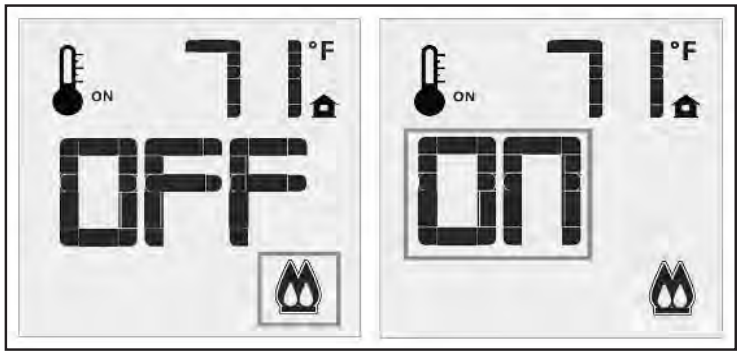

Figure 117: Split Valve Indicator.

WARNING: Fire Hazard. Can cause severe injury or death The Receiver causes ignition of the appliance. The appliance can turn on suddenly. Keep away from the appliance burner when operating the remote system or activating manual by pass of the remote system.

WARNING: Shock Hazard. Can cause severe injury or death. This device is powered by line voltage. Do not try to repair this device. In no way is the enclosure to be tampered with or opened. Disconnect from line voltage before performing any maintenance.

WARNING: Devices rated more than 5A shall not connected to the OUT receptacle. Devices rated more than 1A shall not connected to the FAN receptacle. Devices rated more than 2A shall not connected to the AUX receptacle.

CAUTION: Property Damage Hazard. Excessive heat can cause property damage. The appliance can stay lit for many hours. Turn off the appliance if it is not going to be attended for any length of time. Always place the Transmitter where children cannot reach it.

AIR SHUTTER ADJUSTMENT:

The DV48 is setup to work with two (2) gas orifices. The orifice on the left (looking from the front) feeds the front of the burners while the right feeds the rear of the burners, which can also be switched off using the remote control.

Each orifice has its own Air Shutter. The Air Shutter is connected to an Adjustment Lever that is accessible from the front and bottom of the firebox. These Air Shutters can be adjusted during the operation of the fireplace.

This Figure 118 shows the fireplace with the door and the burners removed. This is to

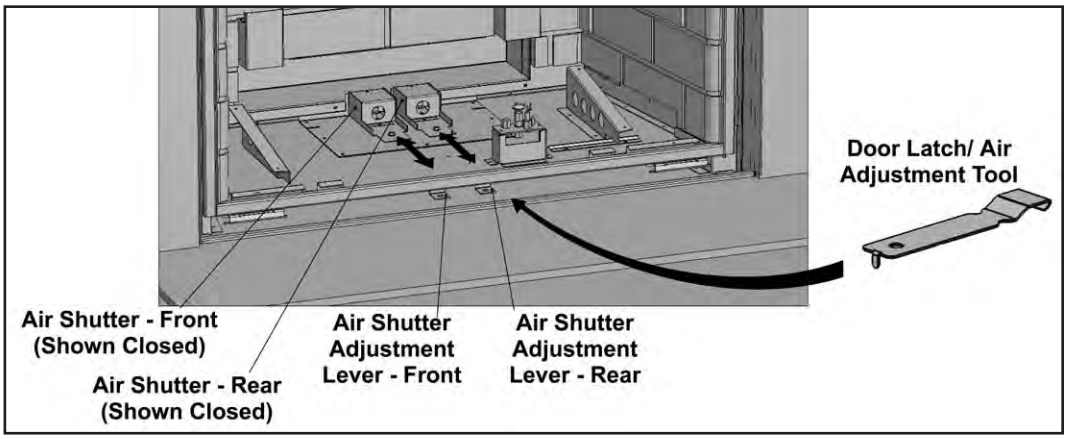

Figure 118: Air Shutter Adjustment.

better show the Air Shutters and the Adjustment Levers. The Door/Air Shutter Tool (see Figure 41) has a small hook on one end. This hook can be used by placing it into the hole at the end of each Adjustment Lever and moving the Adjustment Lever forward or rearward. Moving the Lever towards you opens the Air Shutter, while moving it rearward, closes the Air Shutter.

Air shutters should be adjusted so that the gas flame burns with a blue base and a bright yellow upper section. Air shutters set to closed will lead to a dirty flame which may lead to soot gathering on the logs and/or glass panel. Properly set Air Shutters will result in a very blue flame for the first 15 minutes of operations with the flame becoming more yellow as the unit comes up to operating temperature.

Table 7: Air Shutter Settings.

		Left	Right
Glass / Media Burner	LP	Open	Open
	NG	Open	Open
Log Set/ Ember Bed Burner	LP	Open	⅛" (3mm) Open
	NG	Open	1/16" (2mm) Open

CHECK FOR PROPER BURNER FLAME

Once your new DV48 has run through the "first fire", (see section on first firing) check for proper flame appearance. A gas appliance's performance is dependent on several factors. Vent configuration, fuel type, altitude and restrictor setting are all factors in how the final flame appears in the firebox. The fireplace must be operated for a minimum of 30 minutes or the flame will not normalize. Once this is done, the flame should look similar to Figures 118 & 119. The flame should be lit at all ports, and be burning directly from the burner surface. The base should show some blue with a bright yellow appearance above. The flame should be lively without being disturbed by excessive air turnulence. If your flame does not resemble these images below, ask you service technician to review this installation to determine in some adjustments may be required.



Figure 119: Proper Burner Flame for Ember Bed/ Log Burner.



Figure 120: Proper Burner Flame for Glass / Media Burner.

LIGHTING INSTRUCTION LABEL:

CAUTION: Hot while operating. Do not touch. Severe burns may result. Keep children, clothing, furniture, gasoline or other flammable vapors away.

CAUTION: Do not operate this fireplace with the glass removed, cracked or broken. Replacement of the panel(s) should be done by a licensed or qualified person! This appliance needs fresh air for safe operation and must be installed with provisions for combustion and ventilation air. See installation and operating instructions manual. Keep burner and control compartment clean.

WARNING: Improper installation, adjustment, alteration, service or maintenance can cause injury or property damage, or loss of life. Refer to owner's manual provided with this appliance. See installation and operating instructions accompanying appliance. Installation and service must be performed by a qualified installer, service agency, or the gas supplier.

FOR YOUR SAFETY READ BEFORE OPERATING

WARNING: IF YOU DO NOT FOLLOW THESE INSTRUCTIONS EXACTLY, A FIRE OR EXPLOSION MAY RESULT CAUSING PROPERTY DAMAGE, PERSONAL INJURY OR LOSS OF LIFE.

A) This appliance is equipped with an ignition device which automatically lights the pilot. Do not try to light the pilot by hand.

B) BEFORE LIGHTING smell all around the appliance area for gas and next to the floor because some gas is heavier than air and will settle on the floor.

WHAT TO DO IF YOU SMELL GAS:
Do not try to light any appliance. Do not touch any electrical switch: do not use any phone in your building. Immediately call your gas supplier from a neighbors' phone. Follow the gas suppliers instructions. If you cannot reach your gas supplier, call the fire department.

C) If any portion of this appliance does not operate as the instructions indicate, don't try to repair it, call a qualified service technician. Do not use tools. Force or attempted repair may result in a fire or explosion.

D) Do not use this appliance if any part has been under water. Immediately call a qualified service technician to inspect the appliance and to replace any part of the control system and any gas control which has been under water.

OPERATING INSTRUCTIONS

1. STOP! Read the safety information above on this label.
2. Read the owner's manual including the section on "Remote Control" operation.
3. Do not attempt to light the pilot by hand.
4. If you smell gas, STOP! Follow "B" in the safety information above on this label. If you don't smell gas, go to the next step.
5. Using the remote control, set thermostat to desired setting, or switch press the ON/OFF key on the remote. "ON" will be indicated on the display of the remote and an audible "beep" will be heard at the unit to idicate the command has been received.
6. This appliance is equipped with a completely automatic ignition and lighting control. The control will attempt to light the pilot several timesif necessary. If it is unsuccessful, it will discontinue operations. If the appliance does not operate, follow the instructions "To Turn Off Gas To Appliance" and call your service technician or gas supplier.

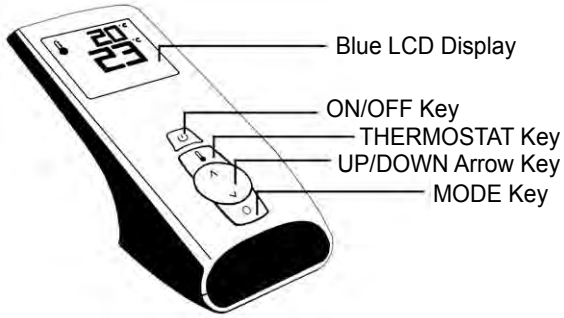

TO TURN OFF GAS TO APPLIANCE

1. Set thermostat to lowest setting, or press the ON/OFF Key. "OFF" will be indicated on the display and an audible "Beep" will be heard at the unit to indicate the command has been received.

C-11800

Figure 116. Lighting Label.

Service / Maintenance

Light Bulb Replacement

The DV48 comes with 2 accent lights in the rear of the fireplace. These are halogen lights that will need replacing from time to time, depending on use. They can be purchased from most hardware stores or specialty lighting stores. The bulb specifications are:

Halogen bulb 120V 50W GY6.36 (lower wattages may be used)

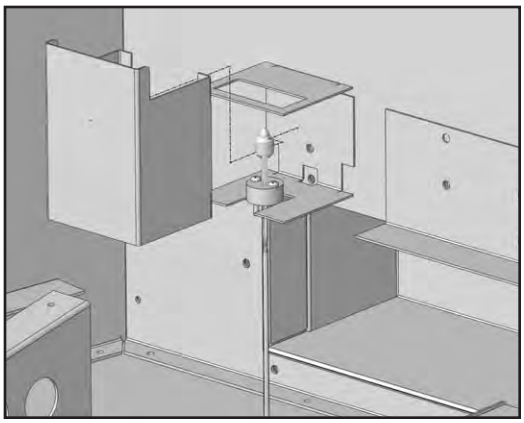

Figure 117. Replacing Light Bulb.

Before replacing the light bulbs, let the unit cool completely to room temperature. In order to replace this bulb, you need to remove the fireplace door, logs, burners and firebox liners. See each specific section in this manual for instructions on how to remove these components. The light is situated in a light cover that is located on the back wall of the firebox. To remove the light cover, lift the cover about ½" and pull towards you. Lift the old bulb from the socket and replace it with the new bulb. It's best not to contact the bulb with your hands. Oils from your skin will diminish the bulbs life. Use paper or the wrapper that the bulb comes in to keep from touching the bulb. If you prefer, the bulb can be replaced with a lower wattage if you'd like to reduce the bulbs effects in the firebox. Re-assemble the various components in the reverse order.

Cleaning / Annual Service:

The DV48 will require maintenance, which can usually be planned on an annual basis. Service should include cleaning, battery replacement, light replacement, venting inspection and inspection of the burner, log sets and firebox liners.

Cleaning The Glass:

When the fireplace has cooled, remove the face of the fireplace along with the glass. See Maintenance And Service - Glass Door Removal. Check the gasket material on the back of the glass, making sure that it is attached and intact.

During a cold start up, condensation will sometimes form on the glass. This is a normal condition with all fireplaces. However, this condensation can allow dust and lint to cling to the glass surface. Initial paint curing of the appliance can leave a slight film behind the glass, a temporary problem. The glass will need cleaning about two weeks after installation. **Use a mild glass cleaner and a soft cloth**; **abrasive cleaners will damage the glass and plated surfaces.** Depending on the amount of use, the glass should require cleaning no more than two or three times a season. **Do not clean the glass when it is hot.**

Replacing Glass:

The glass in the fireplace is a high temperature ceramic. If the glass is damaged in any way, a factory replacement is required (see Parts List - Components). Wear gloves when handling damaged glass door assembly to prevent personal injury. When the glass door assembly is being transported, it must be wrapped in newsprint and tape and/or a strong plastic bag. Do not operate with the glass front removed, cracked or broken. Removal and replacement of the glass from the door **must** be done by a licensed or qualified service person. **The glass must be purchased from an authorized Westgate dealer. No substitute materials are allowed.**

Wiring Harness

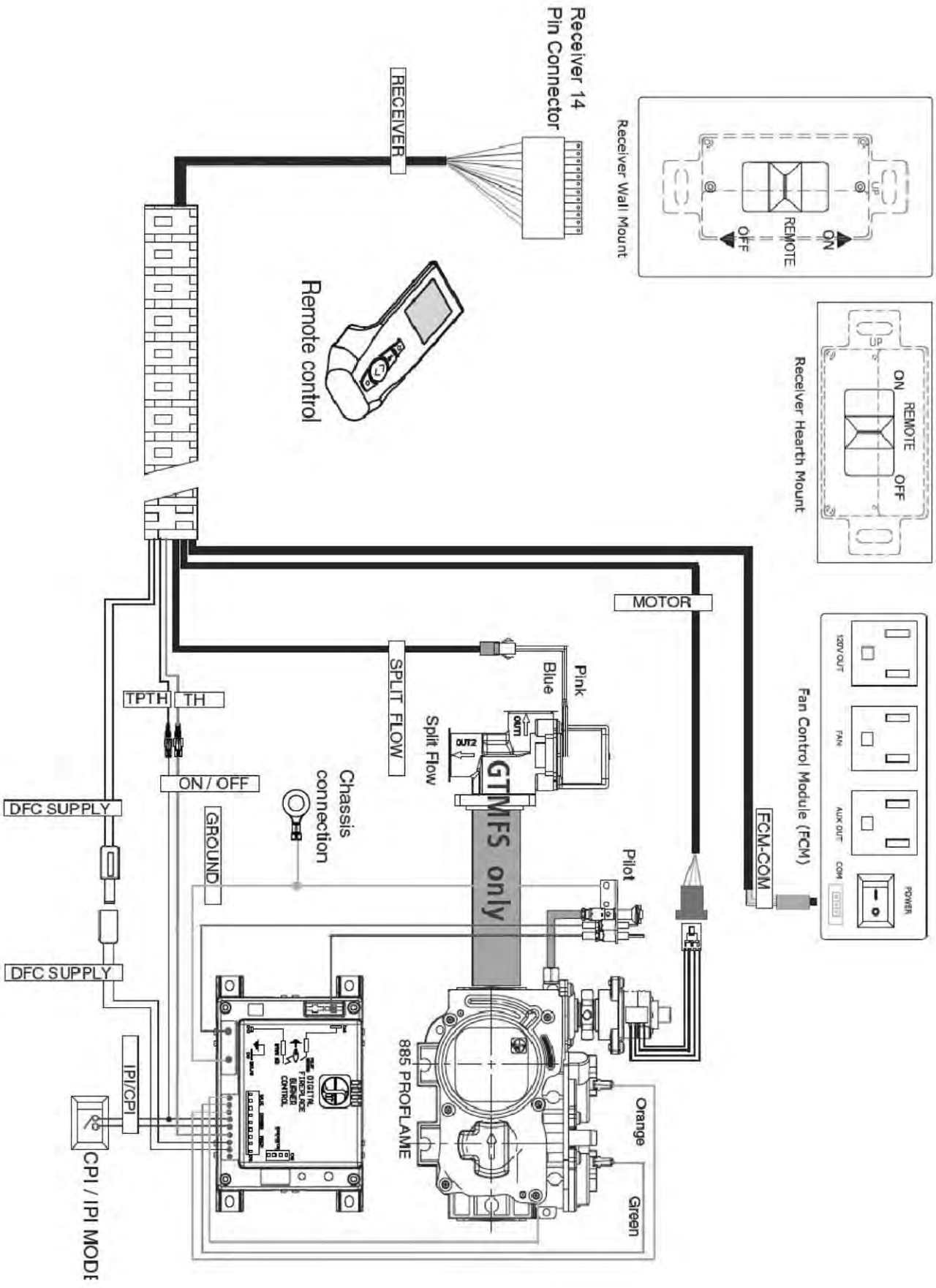

TROUBLESHOOTING

Problem	Possible Cause	Solution
Thermostat does not work	The pilot flame has gone out	· Turn it ON
	The On/Off switch is turn to OFF	
	The thermostat is set too high	· Set the thermostat to a lower temperature
No spark generation	Spark developes near the pilot assembly or could occur onboard	· Check pilot assembly wiring
		· Check for broken or poor connection from the sparker to the electrode
		· Check for the spark shorting or arcing at other locations
		· Check for defective sparker and spark electrode
No pilot flame ignition	No spark from the igniter	· See "no spark generation"
	Air in the gas line	· It takes a while for all the air to purge out of the pilot before gas can reach the pilot and ignite
	Pilot gas pressure dropout upon main burner gas valve opening	· Check gas mains supply and pressure
	No gas flow out of the pilot burner	· Check gas valve wirings and connections to the board
		· Check the pilot burner for obstruction
		· Check the wirings and connections between the pilot assembly and the board
		· Check the correct gas type settings on the valve and pilot burner assembly orifice
Pilot will not remain lit	Problem with Flame Sensor circuit	· Check for proper connection of the Flame Sensor to the DFC board
		· Check pilot for full flame impingement around Flame Sensor
		· If flame is too small, check gas pressure, adjust pilot rate screw, check pilot head for damage
		· Ensure the ground wire is properly attached to the pilot mounting bracket and that it is makes a good electrical connection.
	Restrictor setting	· Use the correct restrictor setting for the venting configuration
Remote control does not work	The pilot light has gone out	· See "Pilot will not remain lit"
	The remote is too far away from the heater	· Use the remote closer to the heater
	The remote control receiver is turned "OFF"	· Check the remote control instructions
	One of the two remote control batteries is dead	· Replace the batteries
No reaction to command	Receiver or transmitter batteries are low	· Replace the batteries
	A maximum number of failed ignitions or flame restorations have been reached.	· Remove any possible blocking conditions. See "locking conditions"
		· See how to reset the board from Lockout
	No communication between the remote control and the receiver	· Reprogram the transmitter to the receiver.
		· Follow the initializing system for the first time

Troubleshooting

Problem	Possible Cause	Solution
Locking conditions	Reset the Proflame DFC board	· Turn the system off by pressing the ON/OFF button on the transmitter
		· After approximately 2 seconds press the ON/OFF button on the transmitter again.
		· In the manual flame control mode, use the down arrow button to reduce the flame to off, indicated by the word OFF displayed on the transmitter LCD screen.
		· Wait approximately 2 seconds and press the up arrow button, the ignition sequence will start.
		· With the transmitter off, move the slider switch on the receiver to the OFF position.
		· Wait approximately 2 seconds and move the receiver slider switch to the ON position.
Main burners will not start	The pilot flame has gone out	· See "Pilot will not remain lit"
	The remote control is not working correctly	· Replace the batteries
	The thermostat is disconnected or set too high	· Set the thermostat to a lower temperature
	Problem with thermopile circuit	· Check gas line pressure
		· Check wiring to thermostat for breaks
		· Check for flame impingement on thermopile
Flame lifting	Leak in vent pipe	· Check for leaks in vent connections
	Improper vent configuration	· Check vent configuration with manual
	Terminal may be re-circulating flue gases	· Check to see if terminal is on correctly
		· May need to install high wind termination cap.
		· Contact dealer
Blue Flames	The heater has just been started	· Normal during start up: flame will yellow as the fireplace heats up
	Improper air shutter adjustment	· Adjust air shutter – contact your dealer
Glass fogs up	Normal condition: after the appliance warms up the glass will be clear.	**Due to additives in gas, glass may get hazy during operation** Clean as needed.
Flames are burning "dirty" or sooting	The logs or glasses are placed incorrectly	· Check log positioning
		· Check level of glasses layout
	Improper air shutter adjustment	· Increase primary air by opening the air shutter and/or by opening the vent restrictor
		· Check for proper venting and blockage of the vent termination
		· See also "Burners will not remain lit"
	Incorrect rating input	· Check manifold pressure and clock input rating for over-firing

Parts List

Item#	Number	Items
1	50-2002	Glass Door Assembly
2	50-2001	Door Tool
3	50-1957	Panel Set - Porcelain
4	50-1944	Panel Set - October
5	50-1945	Panel Set - Sandstone
6	50-1946	Panel Set - Ledgestone
7	50-1938	Burner - Glass media
8	50-1975	Burner - Log / Ember Bed
9	50-1977	Log Set
10	50-1980	Crushed Glass - White
11	50-1981	Crushed Glass - Black
12	50-1978	Refractory Burner Trim Black
	50-1973	Ledgestone Glass Burner Accent
	50-1958	Sandstone Glass Burner Accent
13	50-2004	Valve Assembly
14	50-1572	Fan Controller Module
15	50-2005	IPI Burner Controller
16	50-2007	Remote Receiver
17	50-2006	Transmitter
18	50-2008	Wire Harness - Receiver
19	50-2009	Wire Harness - IPI
20	50-2010	Pilot Assembly
	50-1936	LP Conversion Kit
21	50-1941	Burner Accent Kit - October
21	50-1943	Burner Accent kit - Sand Stone
21	50-1942	Burner Accent Kit - Ledgestone
22	50-2011	Vent Restrictor Set
26	50-2012	Fireplace Facing Kit
24	50-1939	Rock Accents
	50-2003	Owner's Manual

Parts Diagram

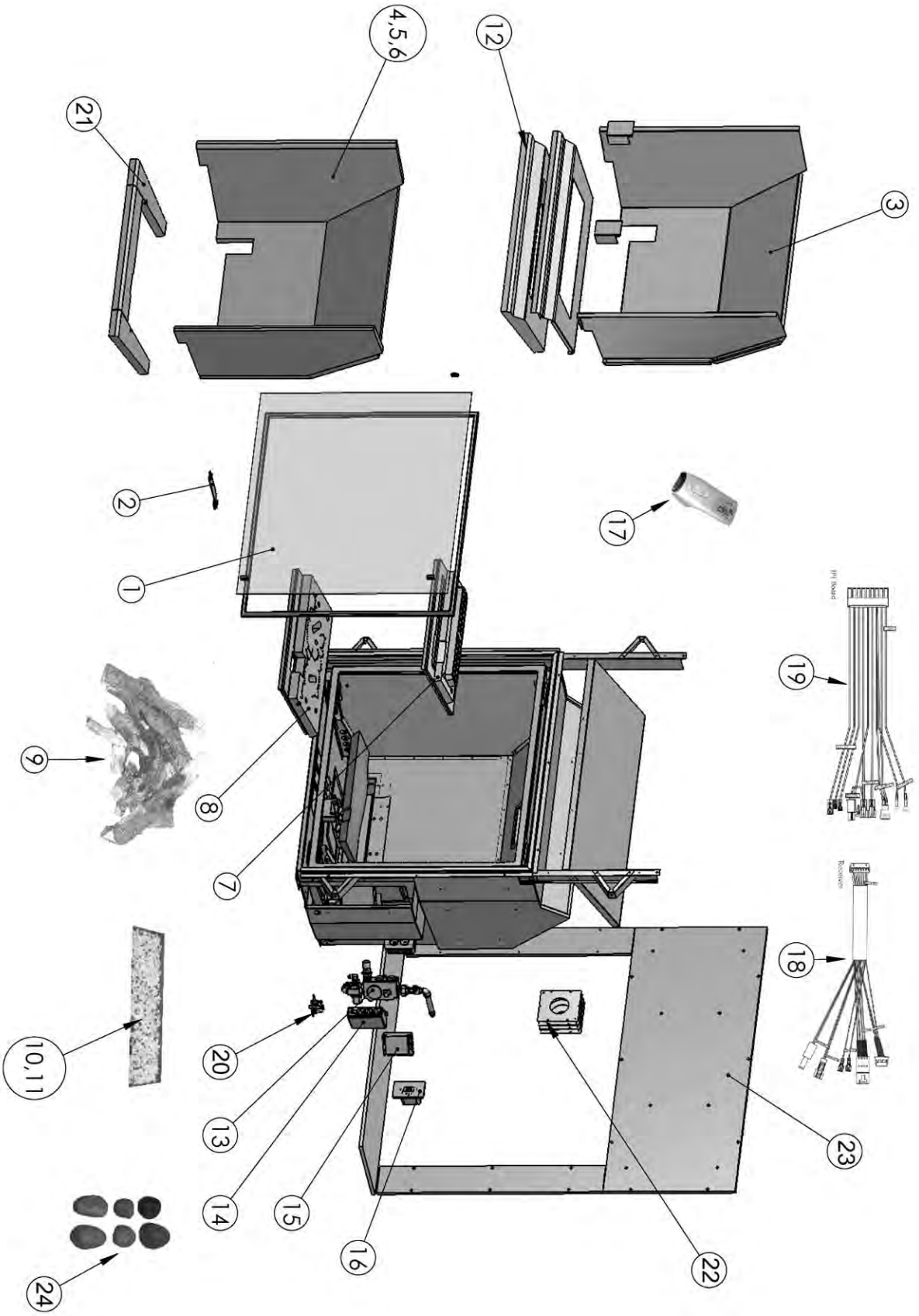

Warranty

Sherwood Industries Ltd. is the manufacturer of the Westgate line of heating products. At Sherwood Industries, our commitment to the highest level of quality and customer service is the most important thing we do. Each Westgate stove is built on a tradition of using only the finest materials and is backed by our Exclusive Lifetime Limited Warranty to the original purchaser. With Westgate, you're not just buying a fireplace or stove, you're buying a company with years of unequalled performance and quality.

Limited Lifetime Warranty:
Under this warranty, Sherwood Industries Ltd. covers the fireplace or stove body and accessories against defects in materials and workmanship, for part repair or replacement for the first seven (7) years and limited labour for the first two (2) years to the original purchaser. This Warranty covers: Firebox, Heat Exchanger, Steel Firebox Panels, Ceramic Logs & Panels, Burner, Ceramic Glass, Pedestals, Panels and Legs. Please see the exclusions and limitation section below as certain restrictions and exclusions apply to this warranty.

Limited Two (2) Year Warranty:
Under this warranty, Sherwood Industries Ltd. covers: Gas Assembly, Blower, Blower control, Temperature Sensors and Wire Harness against defects in materials and workmanship, for part repair or replacement for the first two (2) years and limited labour for the first two (2) years to the original purchaser. Please see the exclusions and limitation section below as certain restrictions and exclusions apply to this warranty.

Limited One (1) Year Warranty:
Under this warranty, Sherwood Industries Ltd. covers all exterior surface finishes against defects in materials and workmanship, for part repair or replacement and limited labour for the first (1) year to the original purchaser. Please see the exclusions and limitations section below as certain restrictions and exclusions apply to this warranty.
Here is how our Warranty works
If you have any concerns with your Westgate product, please contact the dealer where you purchased the fireplace or stove. Your dealer shall make all claims under this warranty in writing.

To the Dealer
When filling out a warranty claim, please complete the following information on an official warranty claim form:
Customer information: Name, address and telephone number of purchaser and date of purchase.
Dealer information: Date of installation, name of installer and dealer, serial number of the appliance, nature of complaint, defects or malfunction, description and part numbers of any parts replaced.

To the Distributor
Sign and verify that work and information are correct.

Exclusions and Limitations:
1. This Warranty does not cover tarnish, discoloration or wear on the plating or paint.
2. This Warranty excludes wear and tear or breakage caused by cleaning, moving or service on log set and panels.
3. A qualified installer must install this stove or fireplace. This Limited Warranty covers defects in materials and workmanship only if the product has been installed in accordance with local building and fire codes; in their absence, refer to the owner's manual. If the product is damaged or broken as a result of any alteration, willful abuse, mishandling, accident, neglect, or misuse of the product, the Limited Warranty does not apply.
4. The stove must be operated and maintained at all times in accordance with the instructions in the Owner's Manual. If the unit shows signs of neglect or misuse, it is not covered under the terms of this Warranty policy. Performance problems due to operator error will not be covered by the Limited Warranty policy.
5. As this is a heating appliance, some changes in colour of surface finishes may occur. This is not a flaw and as such is not covered under this warranty.
6. Some minor expansion, contraction, or movement of certain parts and resulting noise, is normal and not a defect and, therefore, is not covered under this Limited Warranty.
7. Misuse includes over-firing. Over-firing this appliance can cause serious damage and will nullify the Limited Warranty.
8. The Limited Warranty will cover glass thermal breakage only and will not cover misuse of the stove glass, including but not limited to glass that is struck, has surface contaminates or has had harsh or abrasive cleaners used on it.
9. This warranty does not cover products made or provided by other manufacturers and used in conjunction with the operation of this stove without prior authorization from Sherwood Industries Ltd. The use of such products may nullify the Limited Warranty on this stove. If unsure as to the extent of this Limited Warranty, contact your authorized Westgate dealer before installation.
10. Sherwood Industries Ltd. will not be responsible for inadequate performance caused by environmental conditions.
11. The Limited Warranty does not cover installation and operational related problems such as use of downdrafts or spillage caused by environmental conditions. Environmental conditions include but are not limited to nearby trees, buildings, roof tops, wind, hills, mountains, inadequate venting or ventilation, excessive offsets, negative air pressures or other influences caused by mechanical systems such as furnaces, fans, clothes dryers etc.

Warranty

12. The Limited Warranty is void if:
    a) The stove has been operated in atmospheres contaminated by chlorine, fluorine or other damaging chemicals.
    b) The stove is subject to submersion in water or prolonged periods of dampness or condensation.
    c) Any damage to the unit, combustion chamber or other components due to water, or weather damage which is the result of, but not limited to, improper chimney/venting installation.
    c) Salt air in coastal areas or high humidity can be corrosive to the finish; these environments can cause rusting. Damage caused by salt air or high humidity is not covered by the Limited Warranty.
13. Exclusions to the Limited Warranty include: injury, loss of use, damage, failure to function due to accident, negligence, misuse, improper installation, alteration or adjustment of the manufacturer's settings of components, lack of proper and regular maintenance, alteration, or act of God.
14. The Limited Warranty does not cover damage caused to the fireplace or stove while in transit. If this occurs, do not operate the stove and contact your courier and/or dealer.
15. Limited Warranty does not extend to or include firebox paint, door or glass gaskets with damage caused by normal wear and tear, or exterior paint discoloration or chipping, worn gaskets, etc.
16. The Limited Warranty does not include damage to the unit caused by abuse, improper installation, or modification of the unit.
17. Damage to plated surfaces caused by fingerprints, scratches, melted items, or other external scores and residues left on the plated surfaces from the use of abrasive cleaners or polishes is not covered in this warranty.
18. The Limited Warranty does not cover tarnish, discoloration or wear on the plated surfaces.
19. The paint on the Metal Brick Liner may peel. This is due to the extreme conditions applied to the paint during normal usage. It is not a flaw and is not covered under warranty.
20. Sherwood Industries Ltd. is free of liability for any damages caused by the fireplace or stove, as well as inconvenience expenses and materials. The Limited Warranty does not cover incidental or consequential damages.
21. The Limited Warranty does not cover any loss or damage incurred by the use or removal of any component or apparatus to or from the Westgate fireplace or stove without the express written permission of Sherwood Industries Ltd. and bearing a Sherwood Industries Ltd. label of approval.
22. Any statement or representation of Westgate products and their performance contained in Westgate advertising, packaging literature, or printed material is not part of the Limited Warranty.
23. The Limited Warranty is automatically voided if the fireplace or stove's serial number has been removed or altered in any way. If the stove is used for commercial purposes, it is excluded from the Limited Warranty.
24. No dealer, distributor, or similar person has the authority to represent or warrant Westgate products beyond the terms contained within the Limited Warranty. Sherwood Industries Ltd. assumes no liability for such warranties or representations.
25. Sherwood Industries Ltd. will not cover the cost of the removal or re-installation of the stove, hearth, facing, mantels, venting or other components.
26. Labour to replace or repair items under this Limited Warranty will be covered per our warranty service fee reimbursement schedule. Labour rates are set per component and as such total labour costs may not be covered.
27. Sherwood Industries Ltd. is not liable for freight or labour on any stove replaced in-field and is not liable for travel costs for service work. In the event of in-home repair work, the customer will pay any in-home travel fees or service charges required by the Authorized Dealer.
28. At no time will Sherwood Industries Ltd. be liable for any consequential damages which exceed the purchase price of the unit. Sherwood Industries Ltd. has no obligation to enhance or modify any stove once manufactured (example: as a stove evolves, field modifications or upgrades will not be performed).
29. This Limited Warranty is applicable only to the original purchaser and it is non-transferable.
30. This warranty only covers Westgate products that are purchased through an authorized Westgate dealer.
31. If for any reason any section of the Limited Warranty is declared invalid, the balance of the warranty remains in effect and all other clauses shall remain in effect.
32. The Limited Warranty is the only warranty supplied by Sherwood Industries Ltd., the manufacturer of the stove. All other warranties, whether express or implied, are hereby expressly disclaimed and purchaser's recourse is expressly limited to the Limited Warranty.
33. Sherwood Industries Ltd. and its employees or representatives will not assume any damages, either directly or indirectly, caused by improper usage, operation, installation, servicing or maintenance of this stove.
34. Sherwood Industries Ltd. reserves the right to make changes without notice. Please complete and mail the warranty registration card and have the installer fill in the installation data sheet in the back of the manual for warranty and future reference.
35. Sherwood Industries Ltd. is responsible for stocking parts for a maximum of seven (7) years after discontinuing the manufacture or incorporation of the item into its products. An exception to this would be if an OEM supplier is not able to supply a part.

Notes

Installation Data Sheet

The following information must be recorded by the installer for warranty purposes and future reference.

NAME OF OWNER:

_____

ADDRESS:

_____

_____

_____

PHONE:_____

NAME OF DEALER:

_____

ADDRESS:

_____

_____

_____

PHONE:_____

MODEL:_____

SERIAL NUMBER:_____

DATE OF PURCHASE: _____ (dd/mm/yyyy)

DATE OF INSTALLATION:_____(dd/mm/yyyy)

☐ NATURAL GAS (NAT) ☐ PROPANE(LPG)

INLET GAS PRESSURE:_____in wc

MAIN BURNER ORIFICE:_____# DMS

PILOT ORIFICE #_____OR_____in diam.

INSTALLER'S SIGNATURE:

_____

NAME OF INSTALLER:

_____

ADDRESS:

_____

_____

_____

PHONE:_____

MANUFACTURED BY:
SHERWOOD INDUSTRIES LTD.
6782 OLDFIELD RD. SAANICHTON, BC, CANADA V8M 2A3
May 12, 2009
www.westgatefireplaces.com
C-11799