SHERWOOD INDUSTRIES IS AN ENVIRONMENTALLY RESPONSIBLE COMPANY. THIS MANUAL IS PRINTED ON RECYCLED PAPER.

PLEASE KEEP THESE INSTRUCTIONS FOR FUTURE REFERENCE

Enviro

Venice
Wood Stove

BY: SHERWOOD INDUSTRIES LTD

OWNER'S MANUAL

Models: 1200-V & 1700-V Insert



INSTALLER:
Leave this manual with the wood stove.

CONSUMER:
Retain this manual for future reference.

Contact your local building or fire officials, or the authority having jurisdiction about restrictions and installation inspection requirements in your area.

PLEASE READ THIS ENTIRE MANUAL BEFORE INSTALLATION AND USE OF THIS WOOD BURNING ROOM HEATER. FAILURE TO FOLLOW THESE INSTRUCTIONS COULD RESULT IN PROPERTY DAMAGE, BODILY INJURY OR EVEN DEATH.

Tested & Listed By O-T-L C Beaverton Oregon USA
OMNI-Test Laboratories, Inc.

This heater meets the U. S. Environmental Protection Agencies emission limits for wood heaters sold after July 1st, 1990. Under specific conditions this heater has been shown to deliver heat at rates ranging from 11,479 to 34,196 BTU per hour for the 1200-V and from 9,425 to 31,780 BTU per hour for the 1700.

50-2034

Table of Contents

Safety Precautions.....3
Operating Instructions.....4
Building Your Fire.....5
How It Works.....9
Specifications.....10
Air Control.....10
Specifications.....10
Clearances To Combustibles - 1200-V Insert.....11
Clearances To Combustibles - 1700-V Insert.....12
Dimensions - 1200-V Insert.....13
Dimensions - 1700-V Insert.....14
Installation.....15
Removal From Pallet.....15
Modifications For Installation with $19^{1}/_{16}$" (484mm) High Lintel.....15
Masonry Fireplace Installation.....16
Installation Using A Block-Off Plate For USA Only.....19
Model 1200-V Brick Placement & Tube Locations.....21
Model 1700-V Brick Placement & Tube Locations.....22
C-Cast Ceramic Baffle Installation.....23
Fan Wiring Diagrams.....23
Fan Removal.....24
Removal Of Face.....25
Installation Of The Surround Panel.....25
Rating Label.....26
Parts List.....27
Parts Diagram.....28
Warranty.....29
Installation Data Sheet.....32

Safety Precautions

FOR SAFE INSTALLATION AND OPERATION OF YOUR "ENVIRO" WOOD STOVE, PLEASE CAREFULLY READ THE FOLLOWING INFORMATION:

- **Please read this entire manual before you install and use your new woodstove. Failure to follow instructions may result in property damage, bodily injury or even death. Be aware that local Codes and Regulations may override some items in this manual. Check with your local inspector.**
- If this appliance is not properly installed, operated and maintained, a serious house fire could result. Do not use any makeshift materials during installation, maintenance, or replacement.
- Never place wood, paper, furniture, drapes or other combustible materials near the stove. Do not let children or pets touch it when it is hot.
- Operate only with the door tightly closed and burn wood directly on the stove hearth. Do not operate if the door glass is broken or a gasket is missing or damaged. Do not alter the combustion air control valves. Dangerous overfiring could occur which could ignite creosote in the chimney or cause a house fire.
- At least 12 square inches (77.4 cm^2) of fresh outside air should be admitted into the room or directly to the stove through a 4 inch (10.16 cm) diameter pipe. For the stove to operate combustion-air must be supplied through either the bottom or the back of the pedestal.
- Do not burn coal or charcoal as there is danger of carbon monoxide being produced. Do not use chemical fluids to start or re-fresh the fire. Do not burn garbage or flammable fluids such as gasoline, grease, naphtha or engine oil. Never let the stove become hot enough to get any part red or glowing red.
- Burning wet, unseasoned wood could cause excessive creosote accumulation in the flue pipe. When ignited, it could cause a chimney fire that could result in a serious house fire.
- Do not use grates, andirons or any other methods to support or raise the fire up off the hearth of the appliance.
- This appliance is tested to ULC-S627 Standard for Space Heaters for Use with Solid Fuel, ULC-S628 Standard for Fireplace Inserts, & UL 1482 Standard for Safety for Solid-Fuel Type Room Heaters.
- Both the 1200-V & 1700-V Fireplace Inserts are approved for installed into a zero-clearance fireplaces in the U.S. In Canada refer to local building or fire officials for restrictions and installation inspection
- In Canada the existing chimney must be lined to the termination for all masonry installs.

IMPORTANT: The following must be done to ensure proper operation. Failure to do so will cause extreme overheating and possible personal injury or property damage:

- If an outside air supply has not been added to this appliance, please ensure that the 4" inch fresh air outlet on the back of the pedestal is removed.

NATIONAL FIREPLACE INSTITUTE NFI CERTIFIED www.nficertified.org

We recommend that our woodburning hearth products be installed and serviced by professionals who are certified in the U.S. by the National Fireplace Institute® (NFI) as NFI Woodburning Specialists or who are certified in Canada by Wood Energy Technical Training (WETT).

Wood Energy Technical Training www.wettinc.ca

Operating Instructions

FIRST START

When first installed, the chimney, firebricks and steel are cold and it usually takes several hours on a fairly high burn for them to become hot and dry enough for the stove to function well. We recommend during the unit's first burn that a door and window are opened to vent the smoke and fumes created from the unit's paint curing. The paint will smell a little for the first burn or two as it cures.

DISPOSAL OF ASHES:

If you let the ashes accumulate two or three inches on the floor they tend to burn themselves up.

The fireplace insert models do not have and ash drawer so the ashes will need to be scooped into a metal container with a tightly fitting lid. Place the closed container on a non-combustible floor, well away from combustible materials.

If the ashes are to be buried in soil or otherwise locally dispersed, keep them in a closed container until all cinders have cooled. Small amounts of cold wood ash can be used in the garden or compost.

FAN OPERATION:

All models have been approved for operation with the fans supplied by the manufacturer. On medium or high burns, using a fan will increase the heat transfer slightly. Route the power supply cord along the floor behind the stove where it will remain cool.

1. Plug the fan assembly into a standard three (3) prong grounded electrical receptacle.
2. An auto/off/manual rocker switch allows the fan to be turned on manually, or automatically. When this switch is up, it will be set to manual operation; the center position is off, and when pushed down, it will be set to automatic.
3. In automatic mode set the rotary switch to the desired setting, once operating temperature is reached, the fan temperature sensor will turn the fan on. When the unit cools down, the fan temperature sensor will shut the fan off automatically.
4. In manual mode the fan can be turned on and off any time using the rotary switch.

REPLACING THE GLASS:

Never strike or slam the door, hit the glass or let burning wood rest against it. If the glass cracks when the fire is burning, do not open the door until the fire is out and do not operate the stove again until the glass has been replaced. If the glass is damaged in any way, a factory replacement is required (see "Parts List"). To replace the glass, remove the steel retaining clips and all loose glass. Replace only with Neoceram 5 mm glass 16.61" (422 mm) x 10.63" (270 mm) and wrap the edges with 0.125" (3.2 mm) x 0.5" (13 mm) self-adhesive fiberglass gasket.

Wear gloves when handling damaged glass door assembly to prevent personal injury. When the glass door assembly is being transported, it must be wrapped in newsprint and tape and/or a strong plastic bag. **The glass must be purchased from an ENVIRO dealer. No substitute materials are allowed.**

FIRE EXTINGUISHER AND SMOKE DETECTION:

All homes with a solid fuel burning stove should have at least one fire extinguisher in a central location known to all in the household and a smoke detection devise in the room containing the stove. If it sounds the alarm, correct the cause but do not deactivate. You may choose to relocate the smoke detection devise within the room; DO NOT REMOVE THE SMOKE DETECTOR FROM THE ROOM.

Operating Instructions

CREOSOTE - ITS FORMATION AND REMOVAL:

When wood is burned slowly, it may produce tar and other vapors that, combined with moisture, form creosote. These vapors condense in the relatively cooler chimney flue of a slow burning fire and, if ignited, make an extremely hot fire. Therefore, the smoke pipe and chimney should be inspected bi-weekly during the heating season to determine if a build-up has occurred. If creosote has accumulated it should be removed to reduce the risk of a chimney fire.

MAINTENANCE:

At the end of each heating season clean the chimney and the smoke pipe. If soot has accumulated above the top baffle bricks, remove, clean, and then replace them. If the secondary air tube is badly eroded, replace it. Replace worn door gaskets and broken bricks as needed.

FAILURE TO INSPECT AND CLEAN YOUR CHIMNEY SYSTEM REGULARLY CAN RESULT IN A CHIMNEY FIRE, WHICH COULD DAMAGE THE CHIMNEY OR CAUSE A HOUSE FIRE.

CHIMNEY OR RUN AWAY FIRE:

1. Call local fire department (or dial 911)
2. Close the draft fully
3. Examine the flue pipes, chimney, attic, and roof of the house, to see if any part has become hot enough to catch fire. If necessary, spray with fire extinguisher or water from the garden hose.
4. Do not operate the stove again until you are certain the chimney and its lining have not been damaged.

Building Your Fire:

Proper operation of your stove will help to ensure safe, efficient heating. Please take a few moments to review these simple operating procedures.

IMPORTANT: Please be aware when loading your stove that the air tubes in the rear are lower.

1. Fuel Selection:

This stove is designed to burn natural wood only. Higher efficiencies and lower emissions generally result when burning air-dried seasoned hardwoods, as compared to softwoods or to green or freshly cut hardwoods. DO NOT BURN the following: treated wood, coal, garbage, solvents, colored papers, or trash. Burning these may result in the release of toxic fumes and may poison or render the catalytic ineffective. Burning coal, cardboard, or loose paper can produce soot, or large flakes of char or fly ash that can coat the combustor, causing smoke spillage into the room, and rendering the combustor ineffective.

2. Building/Maintaining a Fire:

a) Open the primary air slide by pulling it all the way to the right.

b) Place a base of crumpled uncolored newspaper in the bottom of the stove. Lay pieces of kindling on top of the newspaper and light it.

CAUTION: "Never use gasoline, gasoline-type lantern fuel, kerosene, charcoal lighter fluid, or similar liquids to start or "freshen up" a fire in this heater. Keep all such liquids well away from heater while it is in use.

c) As the kindling begins to burn, add several larger pieces of wood until the fire is burning well. At this point, regular size logs may be added.

NOTE: Until the fire is burning well, leave the air controls fully open.

d) Regulate the heat output of the stove by adjusting the air controls to allow a larger fire and vice versa. A short period of experimentation with the control settings will allow you to regulate the heat output to keep your home comfortable.

Do not use a grate or elevate the fire. Build wood fire on the stove firebox hearth floor.

3. Refueling the Stove:

Use a long pair of gloves (barbecue gloves) when feeding the fire because these stoves burn at the front. They are clean and efficient but they are also very hot and gloves are useful. Keep a small steel shovel and whisk nearby for moving a log or lifting a fallen ember and for keeping the hearth clean.

a) Before attempting to add fuel to the stove, OPEN the damper control fully by pulling it all the way out. This allows the chimney to carry away the additional smoke, which occurs when the door is open.

b) **DO NOT OVERLOAD THE STOVE.** Normally, three or four logs will provide heat for several hours. Never operate this stove where portions glow red hot.

c) **DO NOT OVERFIRE**. If the heater or chimney connector glows, you are overfiring.

d) **CAUTION:** DO NOT PLACE FUEL WITHIN SPACE HEATER INSTALLATION CLEARANCES OR WITHIN THE SPACE REQUIRED FOR CHARGING AND ASH REMOVAL.

4. For Maximum Efficiency:

When the stove is hot, load it fully to the top of the door opening and burn at medium low settings. When the fuel is mostly consumed, leaving a bed of red coals, repeat the process. Maximum heat for minimum fuel occurs when the stove top temperature is between 250°F (120°C) and 550°F (290°C). The most likely causes of dirty glass are: not enough fuel to get the stove thoroughly hot, burning green or wet wood, closing the draft until there is insufficient air for complete combustion, or a weak chimney draw. Indeed, the cleanness of the glass is a good indicator of the stove operating efficiently.

Helpful Hints Worth Repeating

1. Helpful advice on the correct way to start your fire.

a) You will need small pieces of dry wood, called kindling, and paper. Use only newspaper or paper that has not been coated or had other materials glued or applied to it. Never use coated (typically advertising flyers) or coloured paper.

b) Always open the door of the wood stove slowly to prevent suction and drawing smoke into the room.

c) Crumple several pieces of paper and place them in the center of the firebox and directly onto the firebricks of the wood stove. Never use a grate to elevate the fire.

d) Place small pieces of dry wood (kindling) over the paper in a "teepee" manner. This allows for good air circulation, which is critical for good combustion.

e) Light the crumpled paper in 2 or 3 locations. Note: It is important to heat the air in the stovepipe for draft to start.

f) Fully open the air controls of the wood stove and close the door until it is slightly open, allowing for much needed air to be introduced into the firebox. Never leave the door fully open, as sparks from the kindling may fly out of the stove, causing damage or injury. As the fire begins to burn the kindling, some additional kindling may be needed to sustain the fire. DO NOT add more paper after the fire has started.

g) Once the kindling has started to burn, add some smaller pieces of seasoned, dry firewood. Note: Adding large pieces at the early stages will only serve to smother the fire. Continue adding small pieces of seasoned dry firewood, keeping the door slightly open until each piece starts to ignite. Remember to always open the door slowly between placing wood into the fire.

h) Once the wood has started to ignite and the smoke has reduced, close the wood stove door fully. The reduction of smoke is a good indication that the draft in the chimney has started and good combustion is now possible. Larger pieces of seasoned, dry firewood can now be added when there is sufficient space in the firebox. Adjust the air control setting to desired setting. Note: The lower the air control setting, the longer the burn time of your firewood.

2. What type of wood is best to use as firewood?

Both hardwood and softwood burn well in this stove. Both woods contain about 8,000 BTU/lb (18,570 KJ/Kg), but hardwood is generally more dense, will weigh more per cord, and burns a little slower and longer. Cutting firewood so that it will fit horizontally, front to back, makes it easier loading and less likely for the fuel to roll on the glass. Except for a cold start, there is no need to crisis-cross the logs. Ideal length for the logs used in the 1200-V would be about 16" (381 mm) but it can burn pieces up to 18" long. Ideal length for the logs used in the 1700-V would be about 18" (381 mm) but it can burn pieces up to 20" long logs. Burn only dry, seasoned wood. It produces more heat and less soot or creosote. Freshly cut wood has about 50% moisture. A 10 pound (4.5 Kg) log contains 5 pounds (2.3 Kg) of water. To season firewood, split and stack it so that air can get to all parts of the wood. Burn beach wood only if its salt content has been washed away in a season of rain and then the wood dried. To prevent smoke spillage when refueling, open the door slowly.

3. What does dry, seasoned wood mean?

Wood that has been dried for a period of one year in a well-ventilated and sheltered area would be considered dry, seasoned wood. Wood from slow-growing trees is generally considered better than wood from fast-growing trees. To season firewood, split and stack it so that air can get to all parts of the wood.

4. Will following the above-listed steps for starting a fire mean perfect results every time?

The quick answer is 'most of the time'. There are many variables that may affect your success when starting a fire. Most of those variables and how to deal with them will be learned through experience. Your ability to start a good fire will significantly increase with time and patience. Some of the reasons for poor stove performance will be covered in the next section of these instructions.

5. Why can't I get the fire lit?

Damp or wet wood and poor drafts are the main reasons for poor results in starting a fire. Always use dry, seasoned wood for your fire. Even wood dried for two years will be difficult to ignite if it has become wet.

6. Is it normal for soot to cover the glass at the beginning of a fire?

Your stove has been built with an air-wash system that will help keep the glass clear when the firebox has reached a good operating temperature and has a good draft. Normally a hot stove will keep the glass clean, but if you must clean the glass, use a soft cloth with no abrasive and clean only when cold. Cold firebox temperature and poor draft cause sooting of the glass. Once the firebox temperature and the draft increase, the soot will burn off.

7. What is draft?

Draft is the ability of the chimney to exhaust or draw smoke produced during the normal combustion process. Too much draft may cause excessive temperatures in the appliance and may damage the appliance. Inadequate draft may cause backpuffing or "plugging" of the chimney. There is a certain amount of draft that is required to allow for your stove to function at its' highest efficiency. A water column gauge can be used to reference this amount.

8. What can cause a poor draft?

The most common factors for poor draft are:

a) Air supply
b) Environmental conditions
c) Cold chimney temperature
d) Poor chimney installation and maintenance
e) Atmospheric pressure

a) Air supply – Inside the home, normal household appliances such as clothes dryers and forced-air furnaces compete for air, resulting in air starvation to the fire. This creates a condition in the house known as negative pressure. When a house experiences negative pressure, the combustion gases can be drawn from the chimney and into the house. This condition is commonly referred to as down-drafting. Increased amounts of insulation, vinyl windows, extra caulking in various places and door seals can all keep heat in but may also make a home too airtight. An easy way to stop negative pressure in a home is to crack a window in the room containing the stove.

b) Environmental Conditions - High trees, low-lying house location such as in a valley, tall buildings or structures surrounding your house and windy conditions can cause poor draft or down-drafting.

c) Cold Chimney Temperature - Avoid cold chimney temperatures by burning a hot fire for the first fifteen to forty minutes, being careful not to over-fire the stove. If any part of the chimney or parts of the stove start to glow, you are over-firing the stove. Where possible, install a temperature gauge on the chimney so temperature drops can be seen.

d) Chimney Installation and Maintenance - Avoid using too many elbows or long horizontal runs. Too short a chimney can cause difficult start-up, dirty glass, back smoking when door is open, and even reduced heat output. Too tall a chimney may prompt excessive draft, which can result in very short burn times and excessive heat output. If in doubt, contact a chimney expert and/or chimney manufacturer for help. Clean chimney, rain caps and especially the spark arrestor regularly, to prevent creosote build-up, which will significantly reduce chimney draw and possibly a chimney fire.

Note: These instructions are intended as an aid and do not supercede any local, provincial or state requirements. Check with officials or authorities having jurisdiction in your area.

Operating Instructions

How It Works:

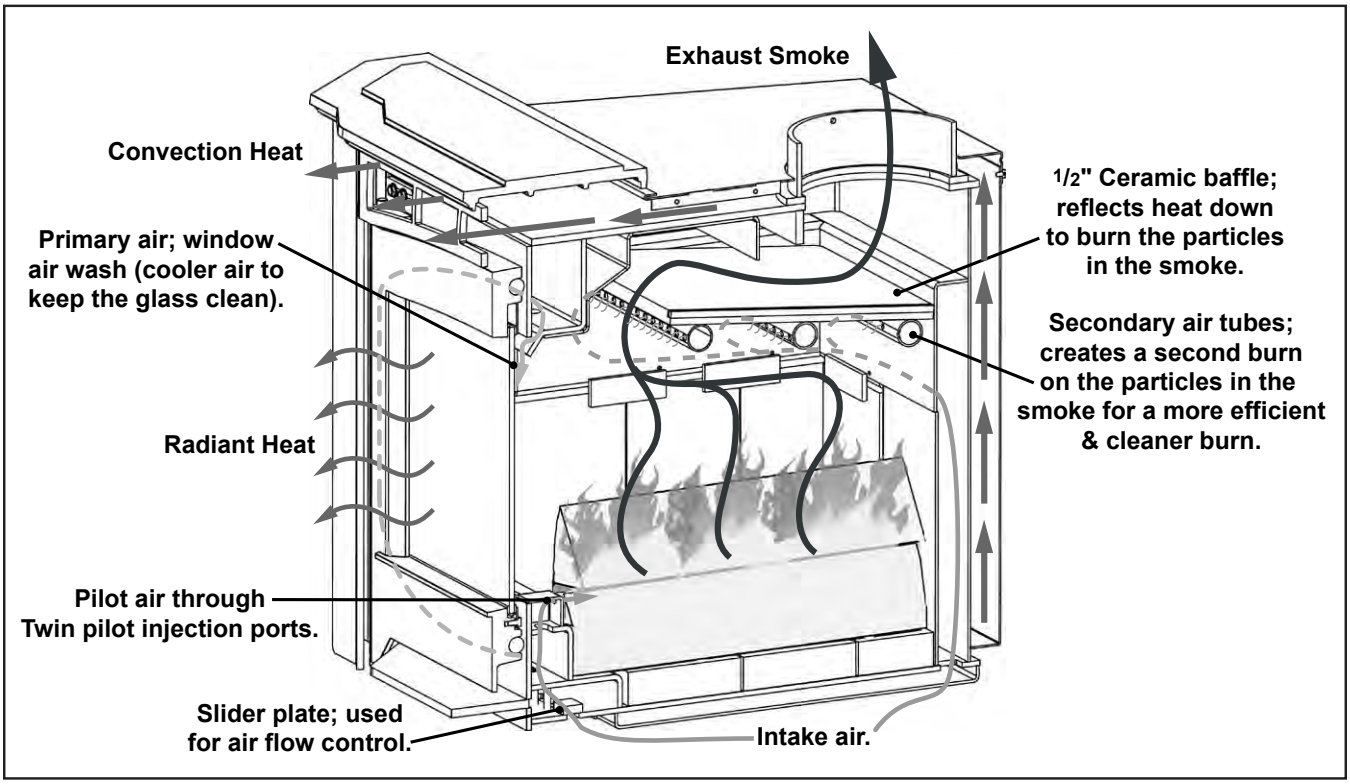

Figure 1: 1200-V Air Flow Path.

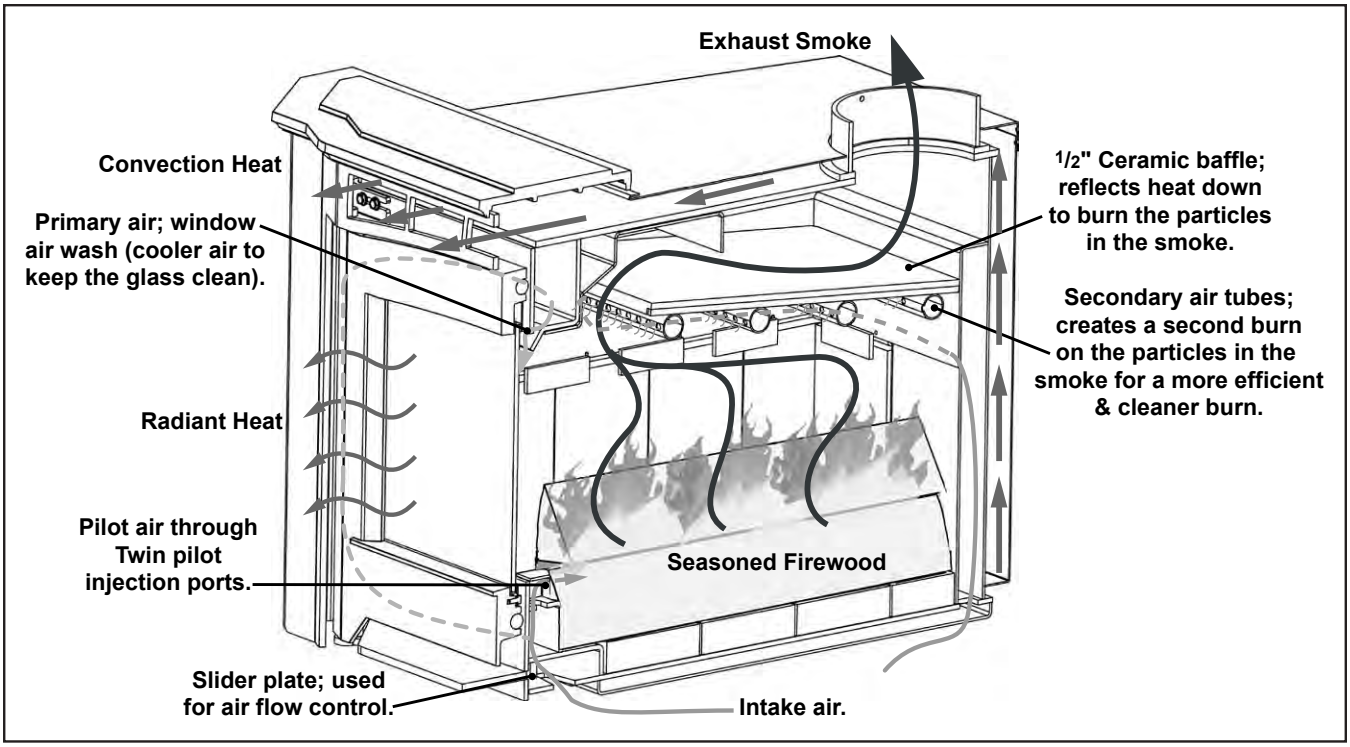

Figure 2: 1700-V Air Flow Path.

Specifications

Air Control:

The air wash and pilot air (control the amount of air to the fire) are controlled by the rod located on the right side of the unit. To increase your air, pull the rod out and to decrease, push the rod in. All the units have a secondary air that flows through the tubes at the top of the firebox, just below the baffles.

Pull this control all the way out when first starting the stove. Once the fire has been established you may adjust this control to set the burn rate of the fire. If this damper is closed at first start-up, the fire will burn very slowly and could soot the appliance.

When shutting down the stove, fully open the air control. This allows the chimney temperatures to remain as high as possible for as long as possible. Cold chimney temperatures create creosote.

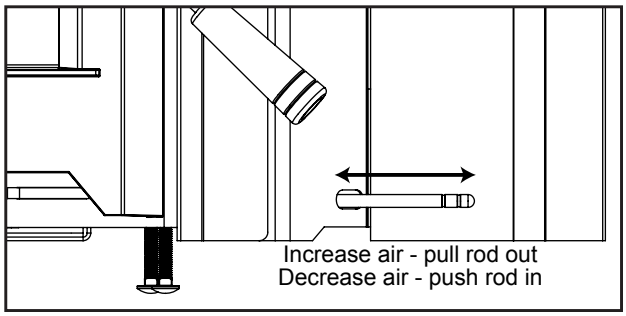

Figure 3: Air Control Rod.

Specifications:

Table 1: 1200-V & 1700-V General Information.

Model	1200 Insert	1700 Insert
Width x Depth	27¾" x 21½" (705 mm x 546 mm)	27¾" x 26" (705 mm x 660 mm)
Height of body	$19^{1}/_{16}$" (484 mm) or $19^{9}/_{16}$" (497 mm)	
Fire box size (depth x width x height)	16.1" x 18.25" x 11.15" (409 mm x 464 mm x 283 mm)	20.65" x 18.25" x 11.95" (525 mm x 464 mm x 304 mm)
Capacity	1.85 $feet^3$ ($0.0526\ meter^3$)	2.5 $feet^3$ ($0.0708\ meter^3$)
* Approximate heating area	800 - 1,500 $feet^2$ ($74.3 - 139.4\ meter^2$)	1,000 - 2,200 $feet^2$ ($92.9 - 205.4\ meter^2$)
**E.P.A. output rating	11,479 to 34,196 BTU/hour (3,361 to 10,013 watt)	9,425 to 31,780 BTU/hour (2,760 to 9,306 watt)
*Duration on low burn	6 -10 hours	8 - 12 hours
Weight with packaging	335 lb (151.95 Kg)	390 lb (176.90 Kg)
E.P.A. Emissions	3.3 grams/hour (0.116 oz/hour)	4.48 grams/hour (0.158 oz/hour)
Surround Panels		
Standard (width x height)	46⅛" x 28" (1171 mm x 711 mm)	
Oversized (width x height)	46⅛" x 33⅛" (1171 mm x 843 mm)	
Rating Label Location	Side of Unit; Behind Right Shroud	

Specifications

Clearances To Combustibles - 1200-V Insert:

Table 2: 1200-V Insert Clearance to Combustibles.

A	Minimum clearance to an unshielded side wall	10″ (254 mm)
B	Minimum clearance to an unshielded 8″ (203 mm) mantel	21″ (533 mm)
C	Minimum top facing (protruding ¾″ [19 mm]) clearance	17½″ (445 mm)
D	Minimum side facing (protruding ¾″ [19 mm]) clearance	1″ (25 mm)
E	† From front of door opening to edge of floor protection	USA 16″ (406 mm) CND 18″ (450 mm)
F	† From side/back of unit to edge of floor protection	USA 6″ (152 mm) CND 8″ (200 mm)

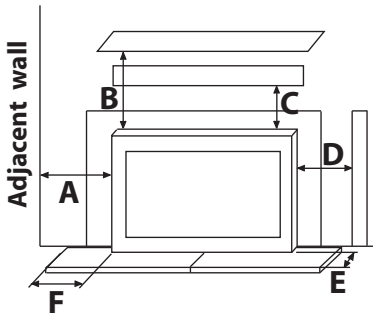

† **FLOOR PROTECTION:**
If unit is raised 0″ - 2″ (0mm-51mm); 1″ (25mm) non-combustible material with k value = 0.84 or equivalent.
If unit is raised 2″ - 8″ (51mm-203mm); ½″ (13mm) non-combustible material with k value = 0.84 or equivalent.
If unit is raised greater than 8″ (203 mm) or more; any non-combustible material can be used.

Table 3: Reduction in (B) Minimum Clearance from 1200-V to 8″ (203 mm) Mantel.

Type of protection	Modified Clearance
A minimum of .013″ (0.33mm) sheet metal spaced out 1″ (25mm) by non-combustible spacers.	10½″ (267 mm)
Ceramic tiles, or eqivalent non-combustible material on non-combustible supports and spaced out 1″ (25mm) by non-combustible spacers.	14″ (357 mm)
Ceramic tiles, or eqivalent non-combustible material on non-combustible supports with a minimum of .013″ (0.33mm) sheet metal spaced out 1″ (25mm) by non-combustible spacers.	10½″ (267 mm)

NOTES:
(1) Mantel protection must have at least 3″ (75mm) edge clearance on all sides, except as provided in Note 4.
(2) If an adhesive is used to support non-combustible material, it shall not lose adhesive qualities at temperatures likely to be encountered and shall not contribute a significant combustible load.
(3) Heat shield mounting hardware attached to combustible materials must be placed at the lateral extremities of the shield.
(4) Minimum clearance to unprotected walls and ceilings must be maintained.

Table 4: 1200-V Insert Minimum Fireplace Size.

	Masonry	Zero Clearance
Minimum Depth	13½″ (343 mm)	14″ (279 mm)
Minimum Width at back of fireplace	22⅜″ (568 mm)	23″ (584 mm)
Minimum Width at front of fireplace	27″ (686 mm)	27¼″ (692 mm)
Minimum Width at front of fireplace to include shroud	33¾″ (857 mm)	34″ (864 mm)
Minimum Height	19¼″ (489 mm)** or 19¾″ (502 mm)	20″ (508 mm)

** If the masonry lintel height is only 19¼″ (489 mm) to 19¾″ (502 mm) refer to Installation - Modifications For Installation with 19¼″ (489 mm) High Lintel - Insert

Specifications

Clearances To Combustibles - 1700-V Insert:

Table 5: 1700-V Insert Clearance to Combustibles.

A	Minimum clearance to an unshielded side wall	10″ (254 mm)
B	Minimum clearance to an unshielded 8″ (203 mm) mantel	24″ (610 mm)
C	Minimum top facing (protruding ¾″ [19 mm]) clearance	19½″ (495 mm)
D	Minimum side facing (protruding ¾″ [19 mm]) clearance	1″ (25 mm)
E	† From front of door opening to edge of floor protection	USA 16″ (406 mm) CND 18″ (450 mm)
F	† From side/back of unit to edge of floor protection	USA 6″ (152 mm) CND 8″ (200 mm)

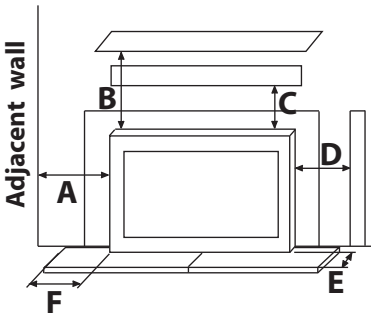

† **FLOOR PROTECTION:**
If unit is raised 0″ - 2″ (0mm-51mm); 1″ (25mm) non-combustible material with k value = 0.84 or equivalent.
If unit is raised 2″ - 8″ (51mm-203mm); ½″ (13mm) non-combustible material with k value = 0.84 or equivalent.
If unit is raised greater than 8″ (203 mm) or more; any non-combustible material can be used.

Table 6: Reduction in (B) Minimum Clearance from 1700-V to 8″ (203 mm) Mantel.

Type of protection	Modified Clearance
A minimum of .013″ (0.33mm) sheet metal spaced out 1″ (25mm) by non-combustible spacers.	12″ (305 mm)
Ceramic tiles, or eqivalent non-combustible material on non-combustible supports and spaced out 1″ (25mm) by non-combustible spacers.	16⅛″ (408 mm)
Ceramic tiles, or eqivalent non-combustible material on non-combustible supports with a minimum of .013″ (0.33mm) sheet metal spaced out 1″ (25mm) by non-combustible spacers.	12″ (305 mm)

NOTES:
(1) Mantel protection must have at least 3″ (75mm) edge clearance on all sides, except as provided in Note 4.
(2) If an adhesive is used to support non-combustible material, it shall not lose adhesive qualities at temperatures likely to be encountered and shall not contribute a significant combustible load.
(3) Heat shield mounting hardware attached to combustible materials must be placed at the lateral extremities of the shield.
(4) Minimum clearance to unprotected walls and ceilings must be maintained.

Table 7: 1700-V Insert Minimum Fireplace Size.

	Masonry	Zero Clearance
Minimum Depth	18″ (457 mm)	18½″ (470 mm)
Minimum Width at back of fireplace	22⅜″ (568 mm)	23″ (584 mm)
Minimum Width at front of fireplace	27″ (686 mm)	27¼″ (692 mm)
Minimum Width at front of fireplace to include shroud	33¾″ (857 mm)	34″ (864 mm)
Minimum Height	19¼″ (489 mm)** or 19¾″ (502 mm)	20″ (508 mm)

** If the masonry lintel height is only 19¼″ (489 mm) to 19¾″ (502 mm) refer to Installation - Modifications For Installation with 19¼″ (489 mm) High Lintel - Insert

Specifications

Dimensions - 1200-V Insert:

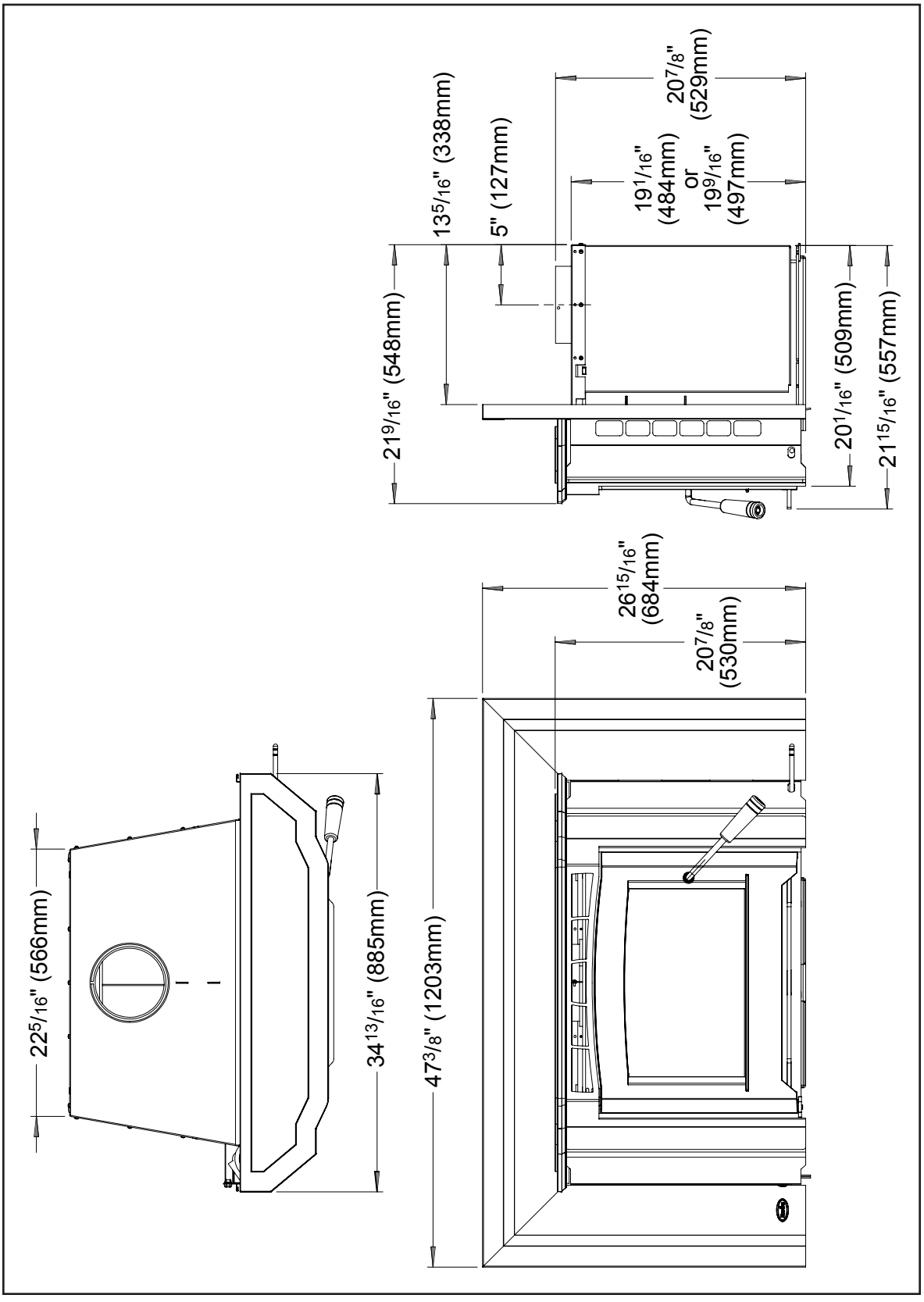

Figure 4: 1200-V Insert Dimensions.

Specifications

Dimensions - 1700-V Insert:

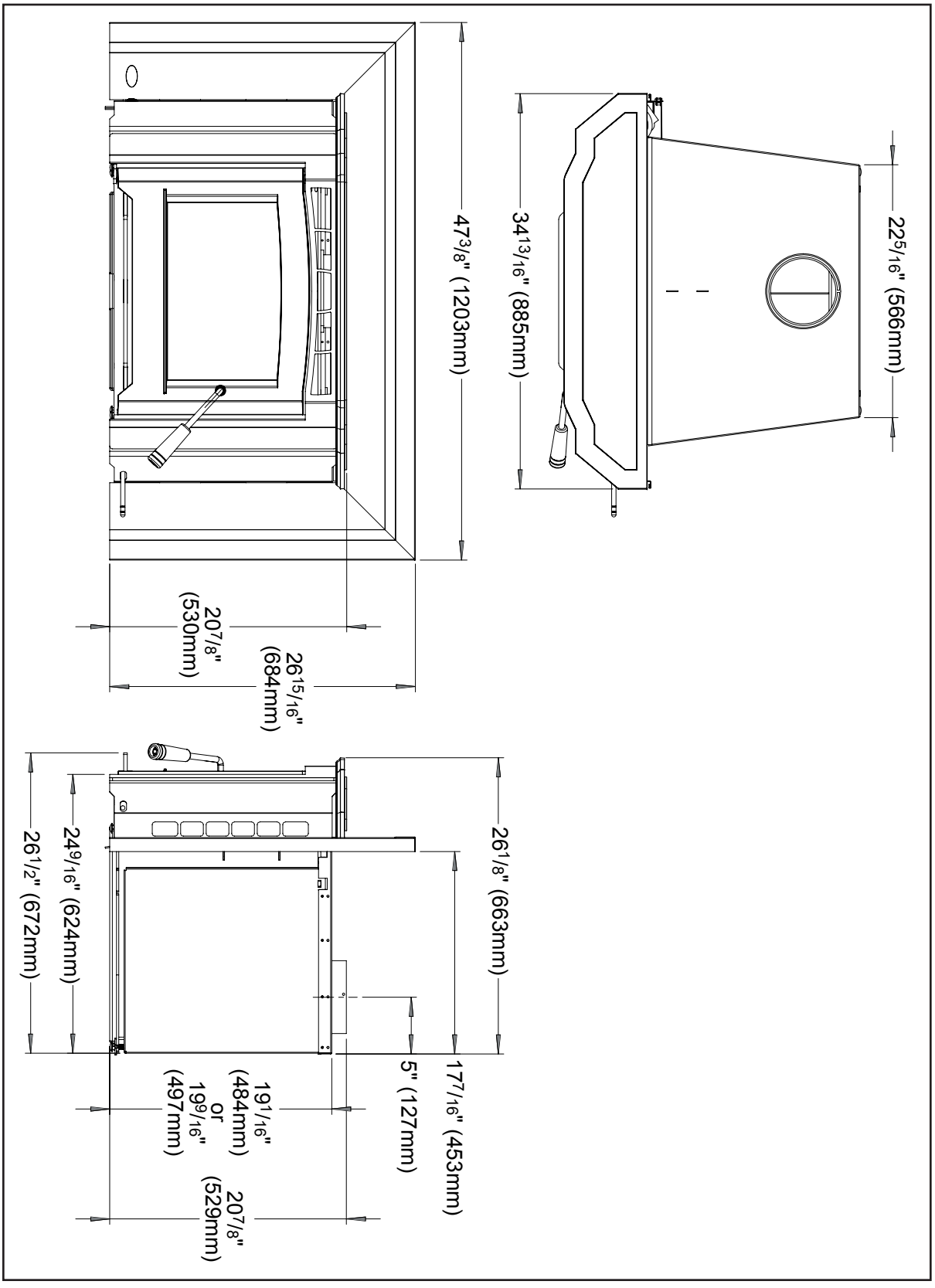

Figure 5: 1700-V Insert Dimensions.

Installation

Please read and understand these instructions before installing pedestal or ash pan and leg option. Failure to follow these instructions carefully could cause personal injury or property damage. All screws are pre-installed on the base of the unit.

Removal From Pallet:

- Remove the bricks from the unit before starting.
- Remove the two (2) lag bolts (shown in Figure 6) that secure the unit to the pallet from inside the firebox.

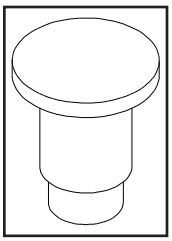

Figure 7: Rivet.

Note: Before the bricks are installed, rivets (Figure 2) must be placed in the two (2) holes (shown in Figure 7) in the firebox that lag bolts came out of. This is done to make unit burn more efficiently.

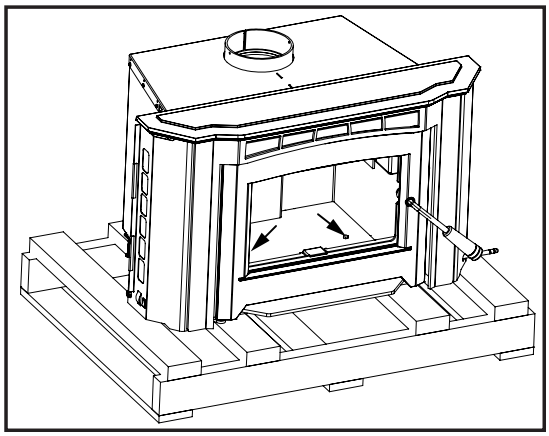

Figure 6: Bolts to remove.

Modifications For Installation with 19 1/16" (484mm) High Lintel:

The Venice has a factory height of 19 9/16" (497mm) and it can be reduced to 19 1/16" (484mm) by modifying the unit and the surround panel.

Insert Unit:

1. Remove the thirteen T-20 screws holding the cabinet top in place (refer to Figure 8).
2. Remove the cabinet top and flip it onto its top.
3. Remove the Air Deflector (shown in Figure 9) by removing the two (2) T-20 screws.
4. Re-install the cabinet top onto the unit. The screw holes along the top of the unit should now line up with the top set of holes on the cabinet top.

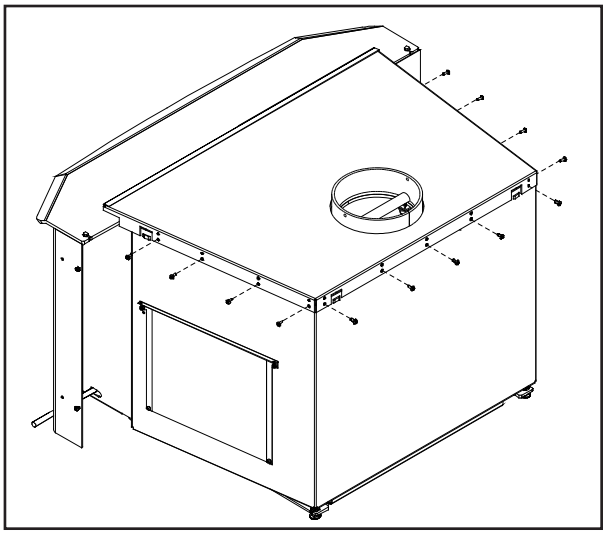

Figure 8: Removing Cabinet Top from Unit.

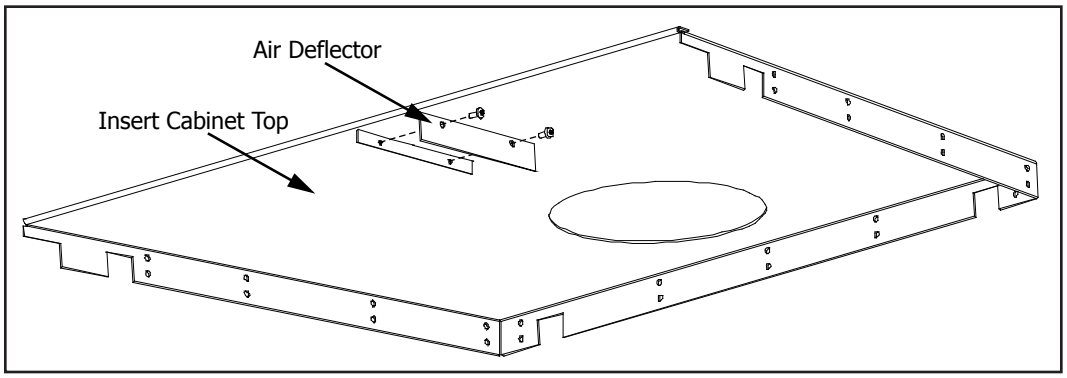

Figure 9: Removing Air Deflector onto Cabinet Top.

Installation

Masonry Fireplace Installation:

Unless you are experienced, we recommend installation by your dealer or a professional installer.

Install only in a masonry fireplace with a good-condition chimney at least 15 ft (4.6 m) high, both of which have been constructed in accordance with the building code. Refer to Tables 4 and 7 for minimum masonry fireplace dimensions. Be sure the fireplace and chimney are clean and sound without any cracks or loose mortar. Do not remove any bricks or mortar from the fireplace.

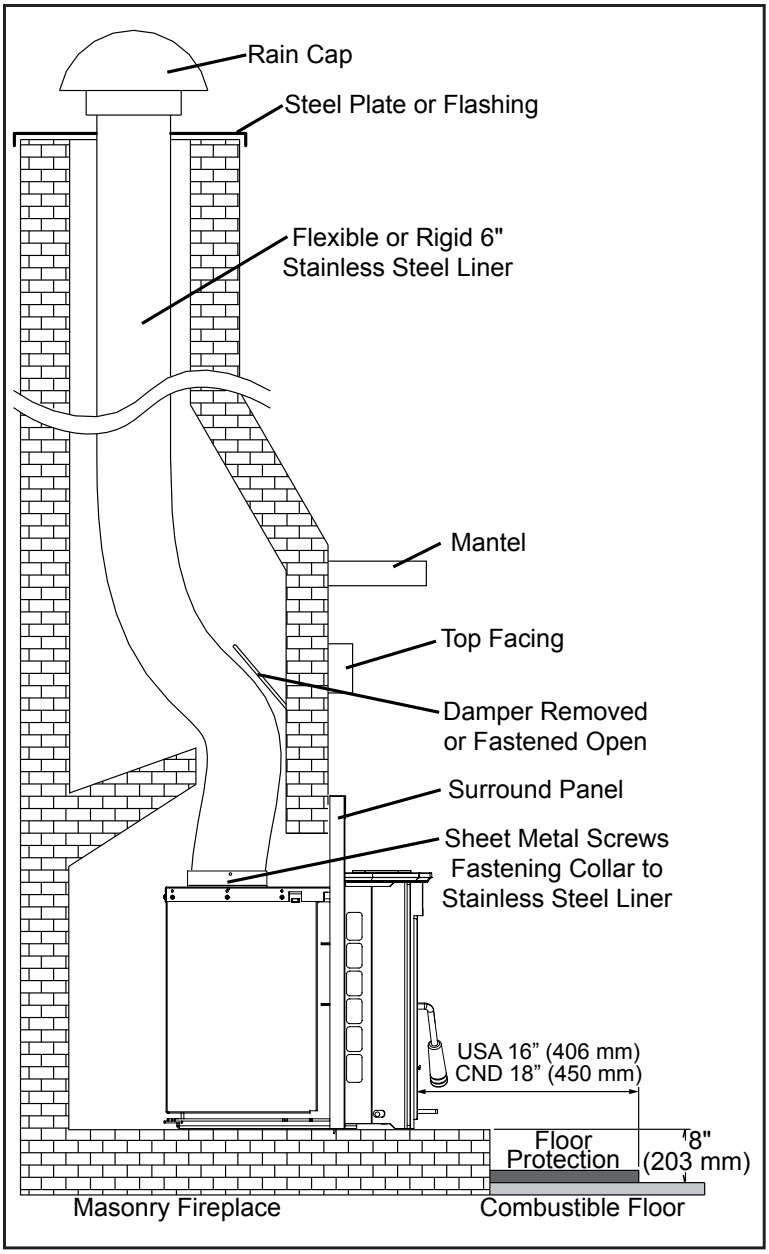

Figure 10: Insert Installation into existing fireplace with hearth.

If there is a combustible floor in front of the masonry fireplace, the fireplace insert must be 8" (203 mm) above the combustible floor, and floor protection must be provided 18" (457 mm) in front of the fireplace insert and 8" (203 mm) to each side of the unit. Refer also to Specifications - Clearances To Combustibles - 1200-V Insert and Specifications - Clearances To Combustibles - 1700-V Insert.

1. Remove any fireplace damper or fasten in a permanent open position.

2. (IN CANADA) The stove is vented with a 6" stainless steel liner that goes directly to the top of the chimney and is covered with a rain cap. The chimney top is sealed with a flashing or steel plate that supports the weight of the chimney liner. The installation must conform to the liner's manufacturer's instructions.

This fireplace must be installed with a continuous liner of 6" diameter (CANADA ONLY) extending from the fireplace insert to the top of the chimney. The chimney liner must conform to the class 3 requirements of ULC-S635 Standard for Lining Systems for Existing Masonry or Factory-Built Chimneys and Vents, or ULC-S640 Standard for Lining Systems for New Masonry Chimneys.

(IN U.S.A.) The appliance when installed, must follow local building codes, in the absence of local building codes, with the current NFPA 211 Standard for Chimneys, Fireplaces, Vents, and Solid Fuel-Burning Appliances.

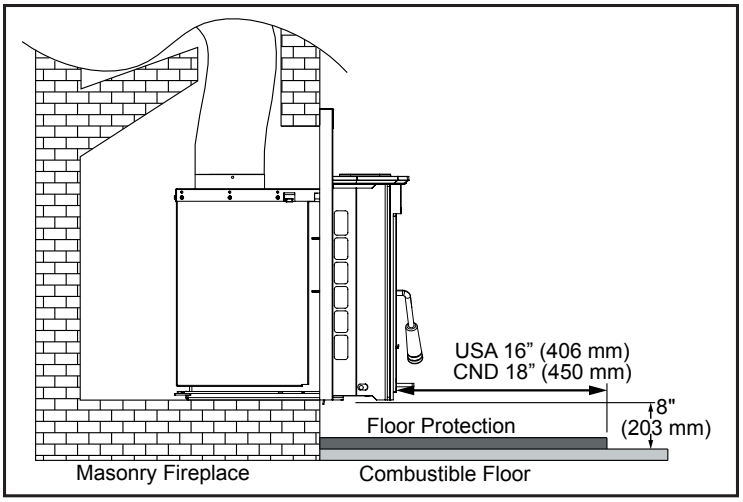

Figure 11: Insert Installation into existing fireplace without hearth.

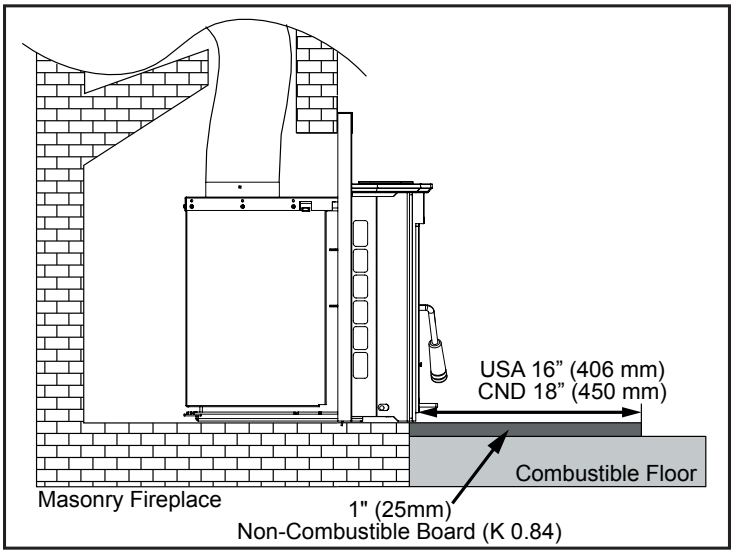

Figure 12: Insert Installation into existing floor level masonry fireplace.

f) Place the Collar Puller, over the two bolts of the Flue Collar and pull it into place (see Figure 14). Ensure that the bolts are to the left and right of the hole. If they are not, the front secondary air tube will need to be removed in order to install or remove the C-Cast Ceramic Baffles.

g) Slide the Flue Collar Clamps and washers over the bolts, and screw the nuts back onto the bolts.

h) Re-install C-Cast Ceramic Baffles and the rear two (2) secondary air tube (see C-Cast Ceramic Baffle Installation).

3. There are four (4) leveling legs (shown in Figure 15), two (2) on each side, one at the back and one at the front of the unit. Adjust the legs using a ⅜" wrench to ensure the unit is stable.

The flue collar is removable for installations into fireplaces with low openings**.**

a) Remove the rear two (2) secondary air tube and C-Cast Ceramic Baffles, if installed (see C-Cast Ceramic Baffle Installation). Remove the secondary air tubes by placing a screwdriver (any style except flat head) into one of the air holes and tapping it with a hammer/mallet to the left.

b) Unscrew the two (2) nuts on top of the inside of the firebox, using a 9/16" wrench or socket (see Figure 13). The Flue Collar Clamps will slide off the bolts.

c) Pull the removable flue collar off the top of the unit.

d) Attach the flue collar to the venting pipe using sheet metal screws.

e) Push the unit into place while trying to keep the collar attached to venting close to the opening on the top of the unit.

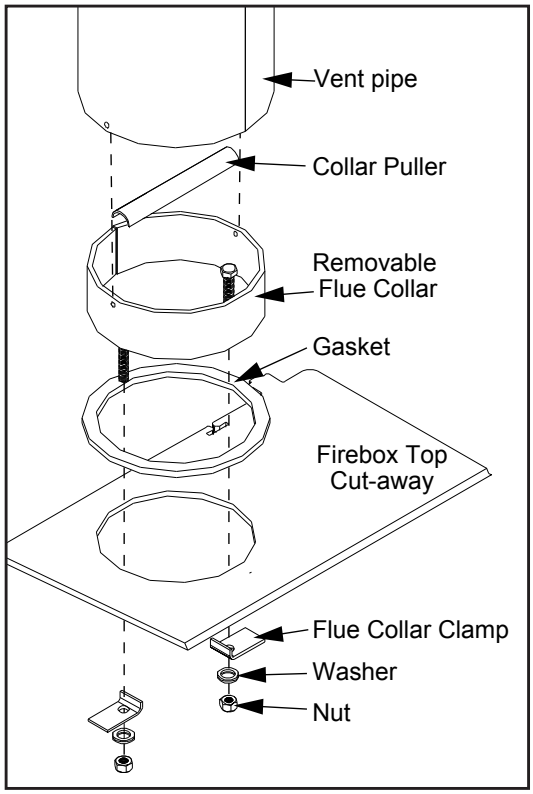

Figure 13: Attaching removable flue collar.

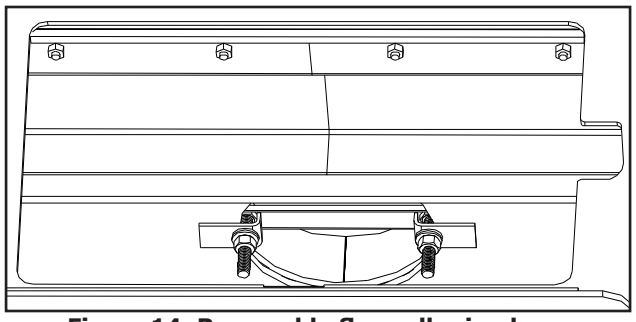

Figure 14: Removable flue collar in place.

4. Screw or nail the provided metal plate with the wording "THIS FIREPLACE HAS BEEN ALTERED TO ACCOMMODATE A FIREPLACE INSERT AND SHOULD BE INSPECTED BY A QUALIFIED PERSON PRIOR TO THE RE-USE AS A CONVENTIONAL FIREPLACE." to the inside of the fireplace.

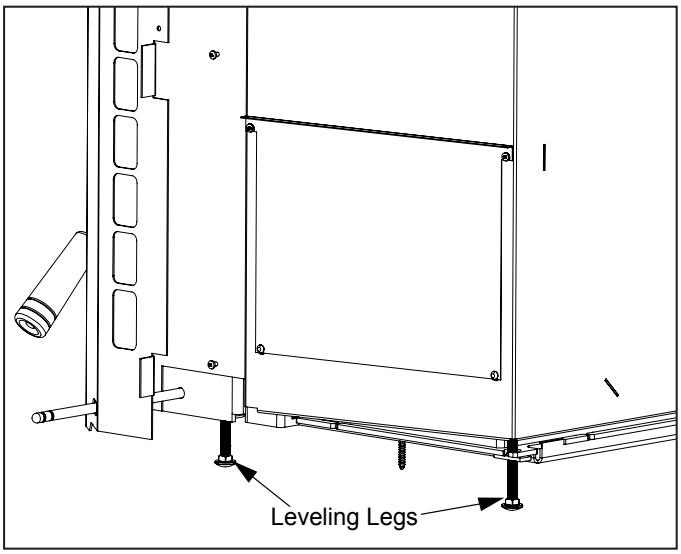

Figure 15: Leveling legs.

Surround Panel Sealed Installation For USA Only:

Note: Though this is an allowable installation, we do not recommend it because of the possibility of poor draft, and therefore poor stove performance.

Before starting this type of installation refer to Installation - Masonry Fireplace Installation - Insert for additional information. For clearances refer to Specifications - Clearances To Combustibles - 1200-V Insert and Specifications - Clearances To Combustibles - 1700-V Insert.

1. Before the face plate is installed onto the unit, glue a 6" (150mm) wide R20 fiberglass insulation strip around the perimeter of the back of the panels using RTV silicon or stove gasket cement. When the face plate is installed onto the unit the insulation must overlaps the fireplace opening to form a seal between the masonry fireplace and the unit's face plate. Let the silicon or cement dry.
2. To make the installation of the surround panel onto the unit easy have the unit 6" (150mm) out from the fireplace,
3. Push the insert into the fireplace, allowing the insulation to form a seal between the panels and the fireplace. Tuck any exposed insulation behind the face plate.

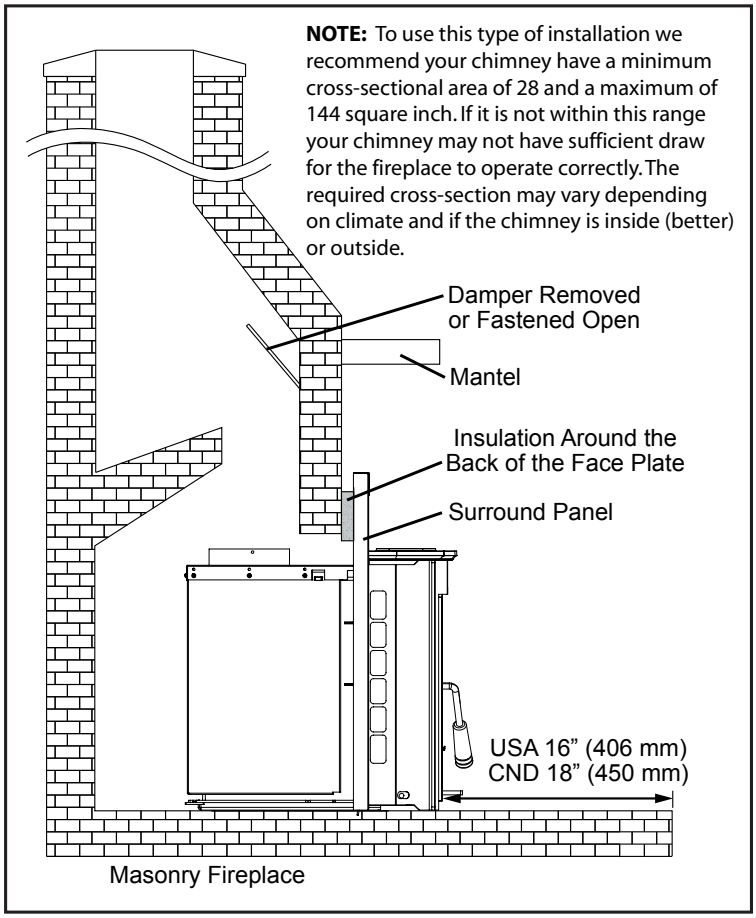

Figure 16: Installation with Surround Sealed.

Installation Using A Block-Off Plate For USA Only:

If this unit is to be installed into a masonry fireplace or a zero-clearance fireplace with a direct connection you must install a non-combustible seal-off device such as a block-off plate or damper adapter. By installing a block-off plate you seal the chimney, ensuring that no smoke enters the home and sealing the chimney to encourage draft. To construct a block-off plate follow the below steps.

1. Determine where the block-off plate will be installed; above the top of the firebox (it must be high enough to easily install the connection pipe) but below the damper area. Look for a location that is level and in an area where the plate can be mounted easily.

   The measurement that will be needed are as followed (refer to Figure 17 and 18):

   A - The width at the front of the firebox at the height where the block-off plate will be installed.

   B - The width at the back of the firebox at the height where the block-off plate will be installed.

   C - Then depth of the block-off needed (the distance between A and B).

   D - The distance of the center of the flue to the front of the fireplace opening. Refer to Step 3.

   NOTE: In general masonry fireplaces have square fireboxes while zero-clearance (metal) fireplaces have domed firebox tops. Therefore zero-clearance block-off plates may be more difficult to install. Insulation may be used around the edges to simplify sealing the plate.

2. Create a cardboard template of the dimensions with 2" (51 cm) wide flanges on each side. These flanges will be used to mount the block-off plate to the inside of the firebox. Bend the flanges downwards on the template and place it inside the fireplace. Continue on if the template fits correctly in its planned location. If the template does not fit, make a new template with the required corrections until it does fit correctly.

3. With the template in place, mark the location for the center of the flue pipe when the unit is in place. If installing a 1200-V the distance will be approximately 8¼" or 9 $^{15}/_{16}$" back from the fireplace opening. If installing a 1700-V the distance will be approximately 12¾" or 14 $^{7}/_{16}$" back from the fireplace opening. Remove the template and cut a 6¼" diameter hole centered on this mark.

4. Using the template make the block-off plate of 24 gauge or thicker steel. Drill two (2) holes in each flange for mounting the plate.

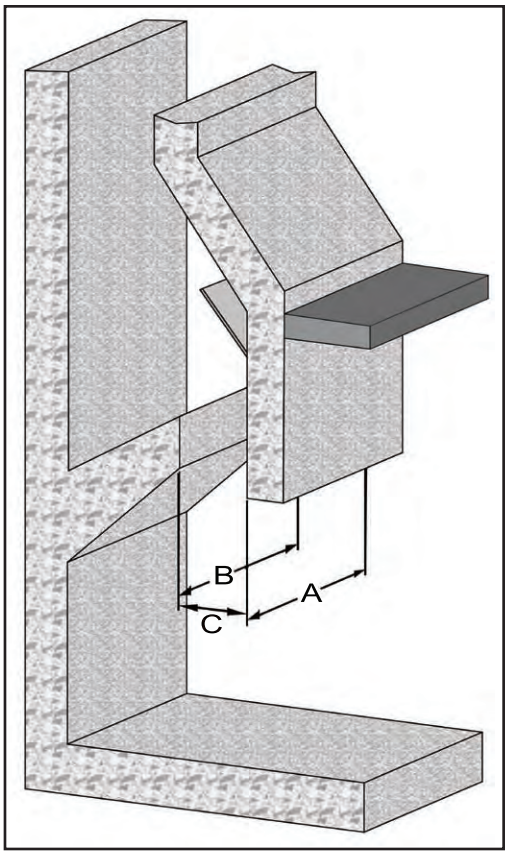

Figure 17: 3D of Dimensions needed from the Fireplace.

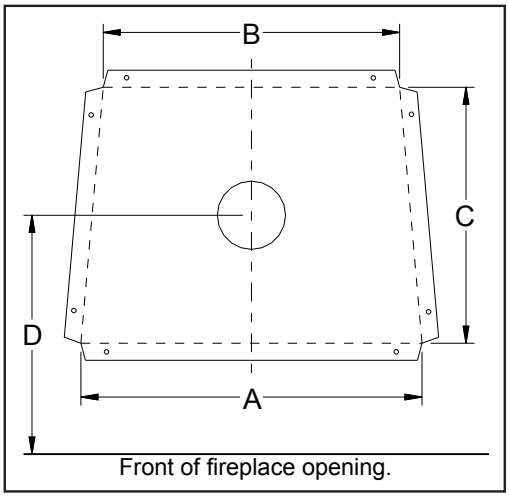

Figure 18: Layout of the Block-Off Plate.

5. Mount the block-off plate using masonry screws in a masonry fireplace and sheet metal screws on a zero-clearance fireplace (screws need only be long enough to penetrate the first layer of metal).
6. Insulate the block-off plate using high - temperature fiberglass insulation and furnace cement.

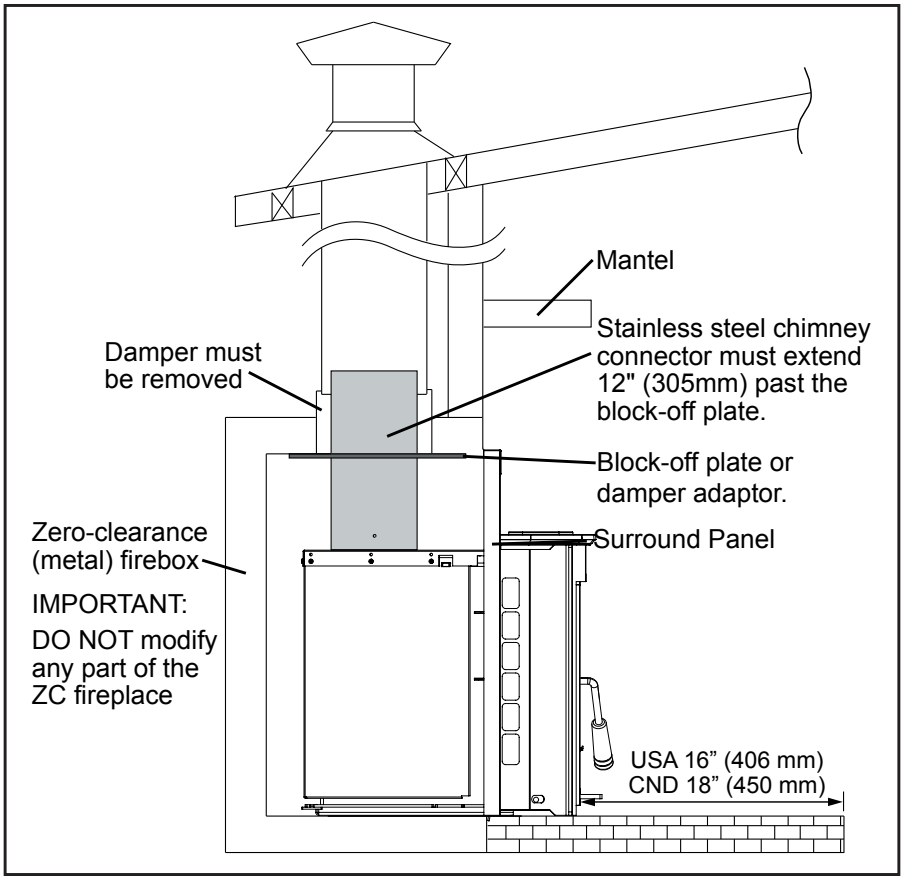

Figure 19: Insert Install into a Zero-Clearance Fireplace.

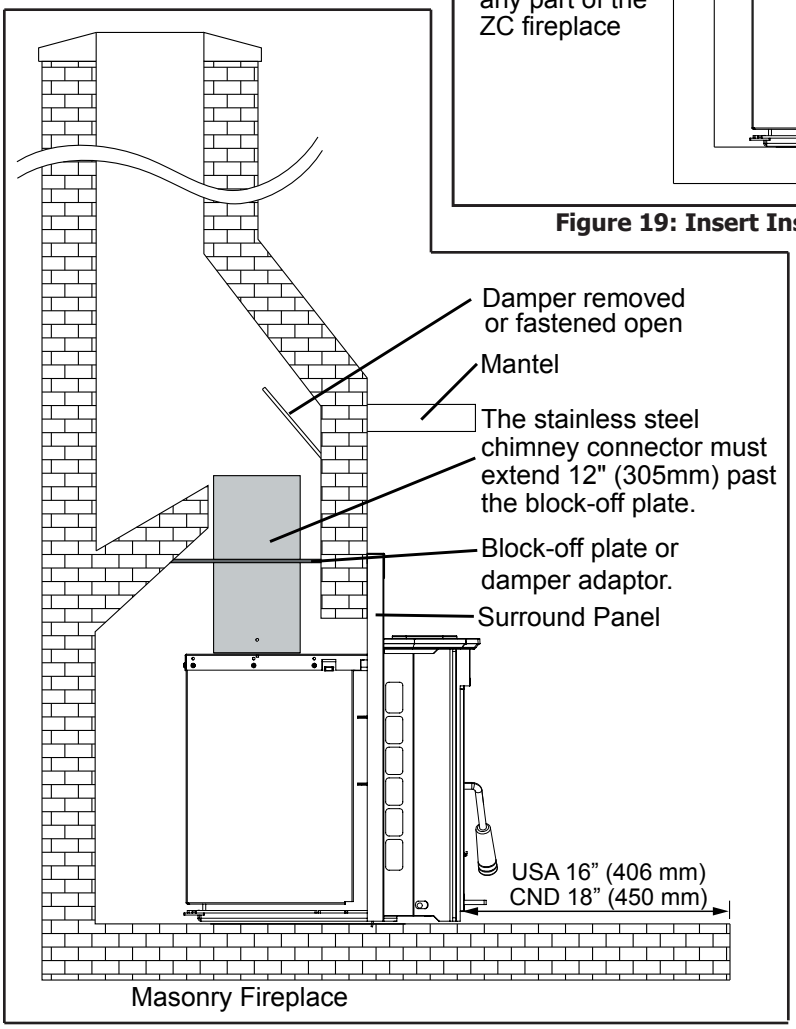

Figure 20: Masonry Fireplace Direct Connection Insert Install.

7. After installing the unit into place and the pipe through the block-off plate, use high - temperature fiberglass insulation and furnace cement to seal any gaps between the pipe and block-off plate (allow the cement to dry for at least 24 hours before burning).

Before starting this type of installation refer to Installation - Masonry Fireplace Installation - Insert for additional information. For clearances refer to Specifications - Clearances To Combustibles - 1200-V Insert and Specifications - Clearances To Combustibles - 1700-V Insert. See Figure 19 and 20 for examples of a masonry fireplace and a zero-clearance fireplace with a direct connection

Model 1200-V Brick Placement & Tube Locations:

COMPLETE THE STOVE AND SMOKE PIPE INSTALLATION BEFORE PLACING THESE BRICKS.

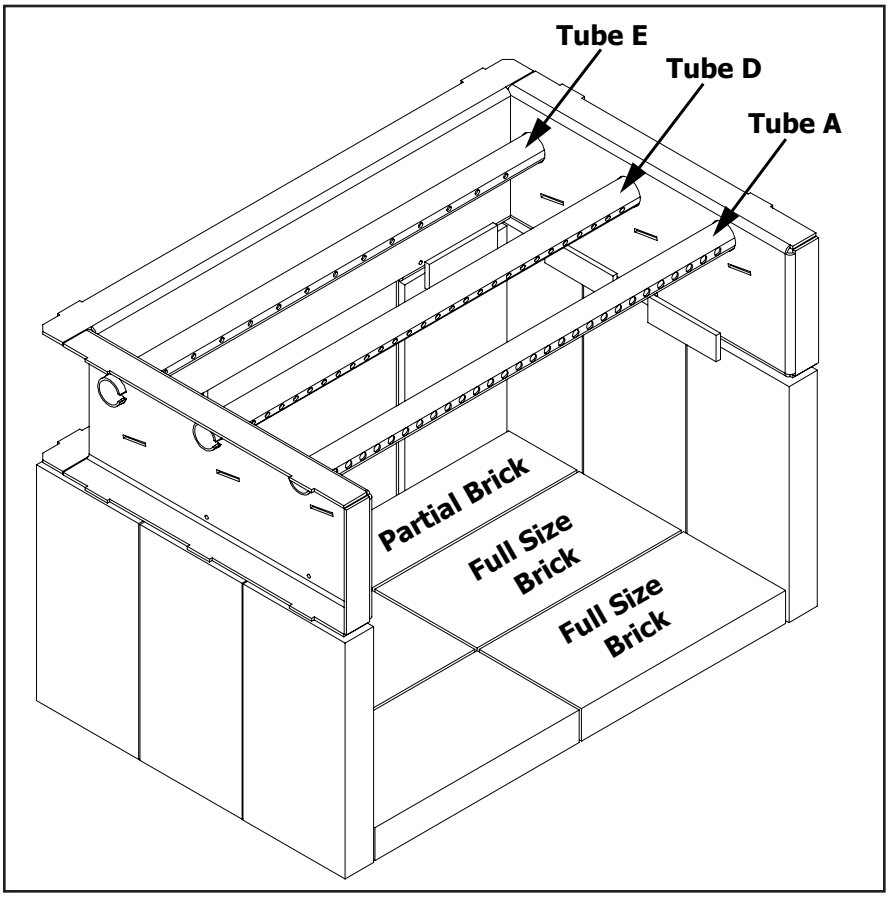

Figure 21: Brick Placement for 1200-V shown with Secondary Air Channel and Tubes.

1. Place the three (3) full size bricks along each side of the firebox and one (1) full size brick on either side of the back of the firebox.
2. To place the floor bricks, lay the two (2) partial bricks along the back of the floor. Then on the left, lay two (2) full size bricks and on the right, lay a full size brick in the center and the half brick in the front (for the ash dump). The spaces between the bricks will soon fill with ashes.

When replacing bricks, use only pumas type fire bricks.

TOTAL BRICKS:

12 - Full size bricks	9” long x 4.5” wide x 1.25” thick (22.9 cm long x 11.4 cm wide x 3.2 cm thick)
2 - Partial bricks	9” long x 3” wide x 1.25” thick (22.9 cm long x 7.6 cm wide 3.2 cm thick)

Removing Air Tube: If a secondary air tube needs to be removed, place a screwdriver (any style except flat head) into one of the air holes and tap it with a hammer/mallet to the left until the right end of the tube is freed. To installation a secondary air tube reverse the above instructions.

IMPORTANT: All secondary air tubes must be in place for proper operation.

Model 1700-V Brick Placement & Tube Locations:

COMPLETE THE STOVE AND SMOKE PIPE INSTALLATION BEFORE PLACING THESE BRICKS.

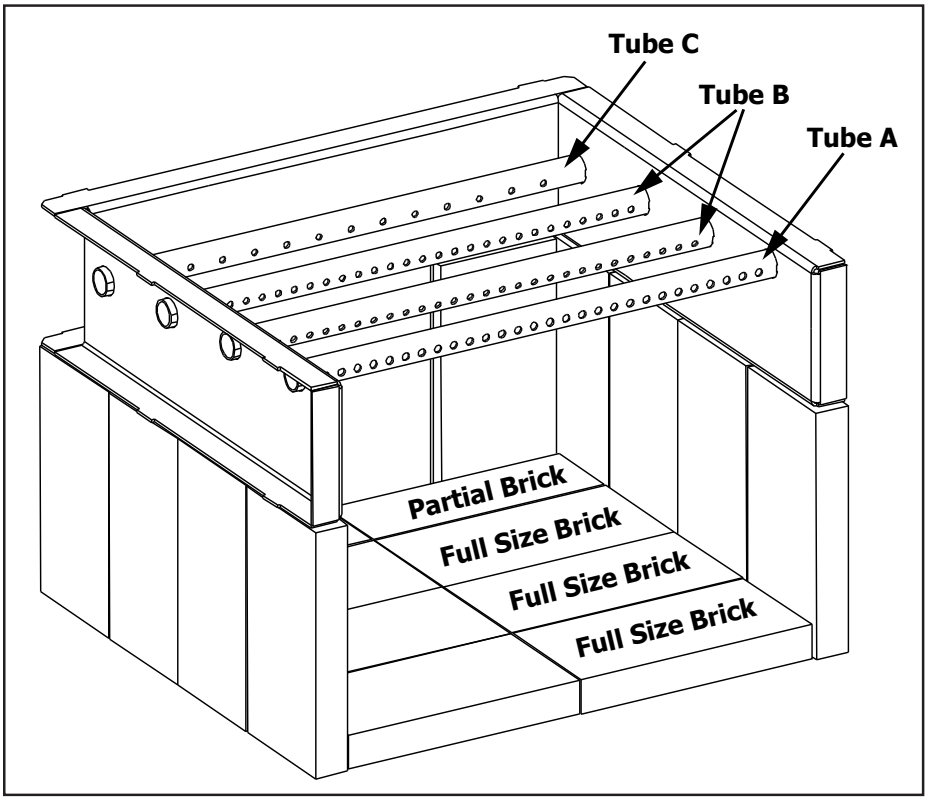

Figure 22: Brick Placement for 1700-V shown with Secondary Air Channel and Tubes.

1. Place the four (4) full size bricks along each side of the firebox and one (1) full size brick on either side of the back of the firebox.
2. To place the floor bricks, lay the two (2) partial bricks along the back of the floor. Then on the left, lay three (3) full size bricks and on the right, lay two (2) full size bricks in the center and the half brick in the front (for the ash dump). The spaces between the bricks will soon fill with ashes.

When replacing bricks, use only pumas type fire bricks.

TOTAL BRICKS:

16 - Full size bricks	9” long x 4.5” wide x 1.25” thick (22.9 cm long x 11.4 cm wide x 3.2 cm thick)
2 - Partial bricks	9” long x 3” wide x 1.25” thick (22.9 cm long x 7.6 cm wide 3.2 cm thick)

Removing Air Tube: If a secondary air tube needs to be removed, place a screwdriver (any style except flat head) into one of the air holes and tap it with a hammer/mallet to the left until the right end of the tube is freed. To installation a secondary air tube reverse the above instructions.

IMPORTANT: All secondary air tubes must be in place for proper operation.

C-Cast Ceramic Baffle Installation:

1. Slide the right C-Cast Ceramic Baffle in over the secondary air tubes at the top of the firebox. The tab must be on the top and pointing towards the center and the smooth side is to face down.
2. Hook the outside edge of the baffle over the top of the secondary air chamber. This will make room to for the installation of the left C-Cast Ceramic Baffle.
3. Slide the left C-Cast Ceramic Baffle in over the secondary air tubes. The tab must be on the bottom and pointing towards the center and the smooth side is to face down.
4. Pull the baffles together in the middle so the right tab rests on top of the left tab. Ensure the baffles are flush with the back and both sides of the firebox.

Note for insert models only: If the bolts on the flue collar are not to the left and right of the hole, the front secondary air tube will need to be removed in order to install or remove the C-Cast Ceramic Baffles. To remove the front secondary air tube place a screwdriver (any style except flat head) into one of the air holes and tapping it with a hammer/mallet to the left.

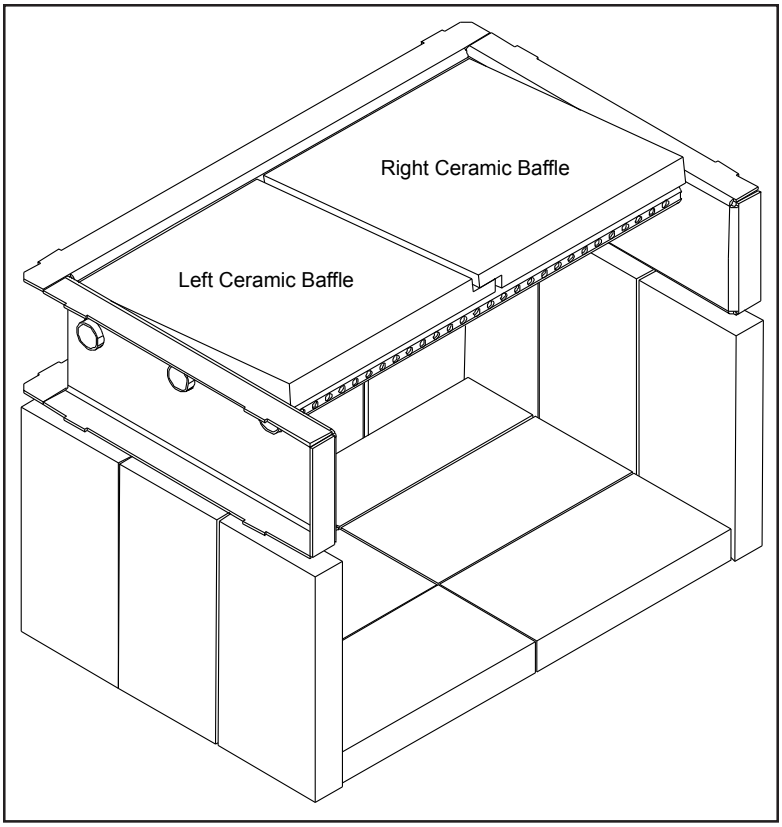

Figure 23: Installation of C-Cast Ceramic Baffle.

Fan Wiring Diagrams:

This appliance, when installed, must be electrically connected and grounded in accordance with local codes or in the absence of local codes, with the current CSA C22.1 CANADIAN ELECTRICAL CODE. Part 1, SAFETY STANDARDS FOR ELECTRICAL INSTALLATIONS, or THE NATIONAL ELECTRICAL CODE ANSI / NFPA 70 in the USA.

CAUTION Label all wires prior to disconnection when servicing controls. Wiring errors can cause improper and dangerous operation. Verify proper operation after servicing.

DO oil the fan bearings regularly.
DO NOT cut or remove the grounding prong from the plug.
DO NOT route the power cord beneath the heater.

WARNING: This appliance is equipped with a three-prong (grounding) plug for your protection against shock hazard and should be plugged into a properly grounded three-prong receptacle.

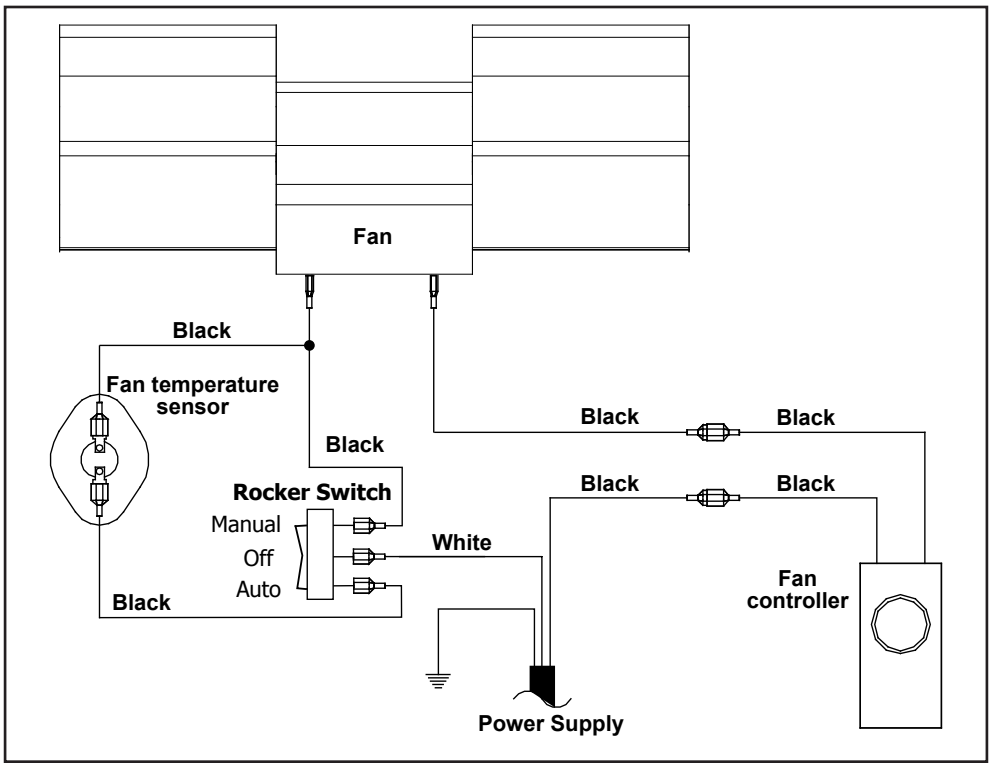

Figure 24: Fireplace Insert Fan Kit Wiring Diagram.

Fan Removal:

The Insert comes with the fan assembled installed in the left shroud.

1) Disconnect all electrical connections for the fan kit.
2) Remove the four (4) ½" hex head screws that hold the fan mounting plate to the shroud. If doing a fan only replacement, remove the four (4) T-20 screws holding the fan to the fan mounting plate.
3) Remove the fan control knob and nut from the front of the shroud and pull the controls out the back.
4) Install the fan kit into the new shroud by following reversing steps 1 to 3. Refer to Fan Wiring Diagram to ensure the fan is reconnected properly.

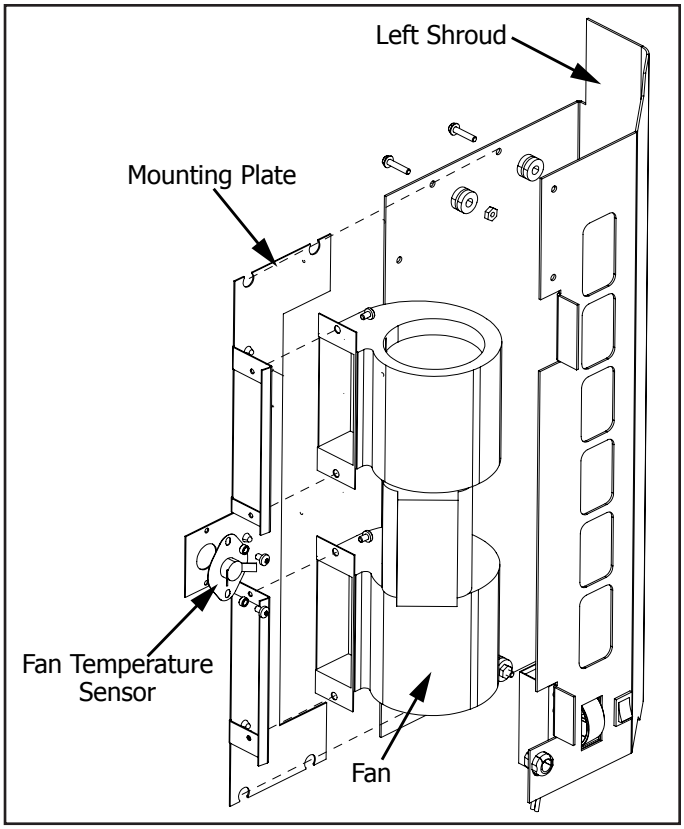

Figure 25: Insert Unit with Fan.

Installation

Removal Of Face:

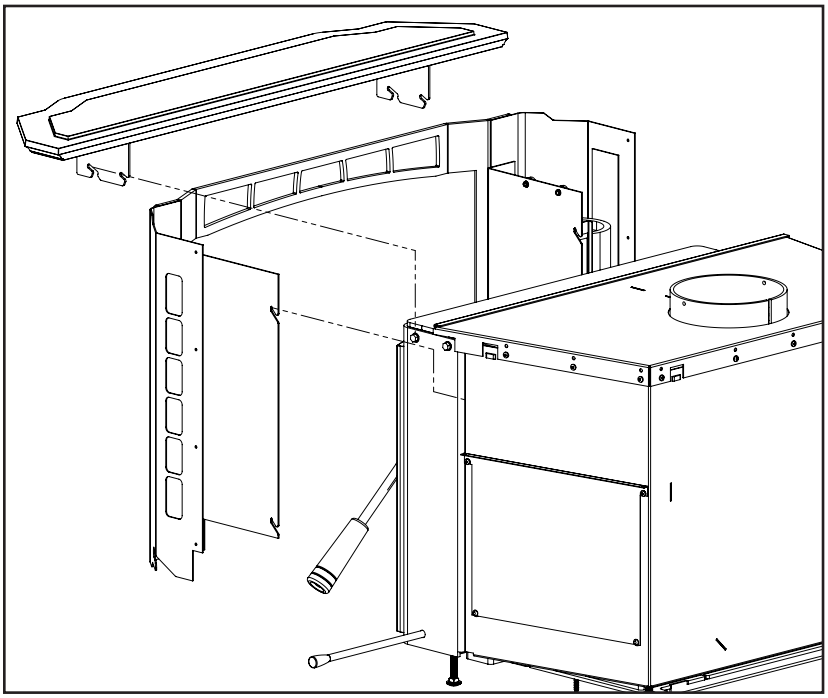

Figure 26: Removal of Face.

1. Remove the cast top from the unit (lift up and forward)
2. Lift up and forward on the unit face, the entire face and surround panel will come away from the unit.

Installation Of The Surround Panel:

1. Loosen (but do not remove) the four (4) ¼" screws holding the cast top.
2. List the cast top off the unit and place to the side.
3. Loosen the four (4) torx T-20 screws holding the face on the unit.
4. Lift the face up and forward to remove from the unit.
5. Attach the surround panel to the face using the eight (8) torx T-20 screws provided (four per side).
6. Replace the face on the unit and tighten the four torx T-20 screws.
7. Replace the cast top on the unit. The four (4) ¼" screws can be left loose.

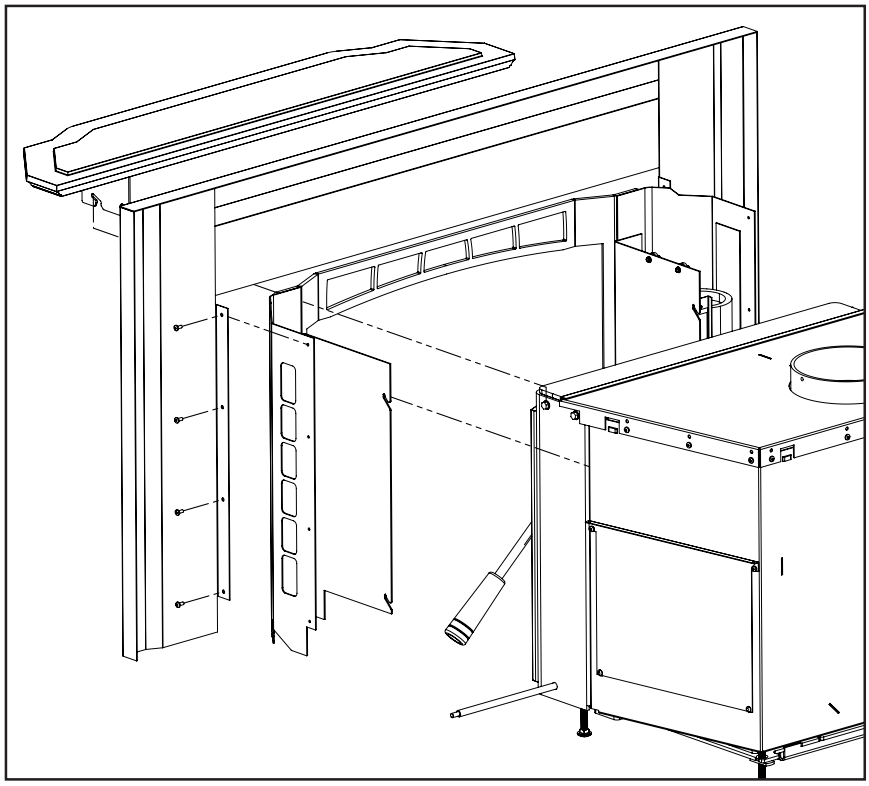

Figure 27: Installation of Panel.

Rating Label

Tested & Listed By O-TL C US Beaverton Oregon USA

OMNI-Test Laboratories, Inc,

Certified for use in Canada & USA /
Certifié pour installation au Canada et aux Etats-Unis.

DO NOT REMOVE THIS LABEL / NE PAS ENLEVER CETTE ÉTIQUETTE

LISTED SOLID FUEL SPACE HEATER / IDENTIFIE COMME UN FOYER A COMBUSTIBLE SOLIDE

Serial No. / No. De Serié:

Model / Modèle:
Report/Rapport no.

- ☐ Kodiak 1200 FS 268-S-04-2
- ☐ Kodiak 1200 Insert 268-S-05-2
- ☐ Kodiak 1700 FS 268-S-01-2
- ☐ Kodiak 1700 Insert 268-S-06-2
- ☐ Venice 1200 Insert 268-S-05-2
- ☐ Venice 1700 Insert 268-S-06-2

Models 1200 and 1700 Freestanding units suitable for use in mobile homes.
Tested to ULC-S627-00, ULC-S628-93, & UL-1482.
US Environmental Protection Agency, certified to comply July 1, 1990, particulate emission standards.

Install and use only in accordance with the manufacturers installation and operating instructions. Contact local building or fire officials about restrictions and installation inspection in your area. Use 6" (150 mm) diameter minimum 24 MSG black or 25 MSG blued steel connector listed factory-built chimney suitable for use with solid fuels or masonry chimney. See local building code and manufacturer's instructions for precautions required for passing a chimney through a combustible wall or ceiling. Do not pass chimney connector through a combustible wall or ceiling. Minimum clearances from horizontal connector and ceiling 18" (455 mm) do not connect this unit to a chimney flue servicing another appliance U.S.A. Only.

Modèles 1200 et 1700 items indépendants utilisables dans les maisons mobiles.
Testé selon ULC-S627-00, ULC-S628-93, & UL-1482.
États-Unis Environnemental Protection Agence, a certifié pour conformer au Juillet 1, 1990, les normes de particules d'émission.

Ce dispositif doit entre installé et opéré conformément aux instructions d'installation et d'opération du manufacturier contactez le service local de l'inspection des bâtiments ou l'officier pompier concernant les restrictions et l'inspection d'installation dans votre localité. Utiliser des connecteurs répertoriés 24 MSG noir ou 25 MSG en acier bronzée de 6" (150 mm) minimum, et une cheminée de fabrication industrielle, appropriée pour utilisation avec des combustibles solides ou avec une cheminée de maçonnerie. Vérifiez les précautions a prendre exigées parle code local et les instructions du manufacturier concernant les conditions pour passer la cheminée a travers un mur ou un plafond combustible. Net pas installer le connecteur de la cheminée a travers un mur ou un plafond combustible. Espaces libres minimum d'un connecteur horizontal et plafond sont 18" (455 mm) ne pas connecter ce dispositif a un conduit de cheminée qui sert déjà un autre dispositif États-Unis seulement.

	Minimum Clearances to Combustible Materials / Espaces Libres Aux Materiax Combustibles.	Single wall pipe / Seul connecteur de mur		**Double wall pipe / Double connecteur de mur		Double wall pipe with efficiency shield (Flat top model only) / Double connecteur de mur avec la protection d'efficacité (Le modèle plat seulement		Top vent out back wall with min. 24" (610mm) vertical rise; double wall pipe / Donné vent hors de la paroi arrière avec le min. 24" (610 mm) l'ascension verticale; double connecteur de mur	
	Model / Modèle	1200	1700	1200	1700	1200	1700	1200	1700
A	Sidewall to unit / De la paroi latérale au dispositif	13" (330 mm)	20" (508 mm)	13" (330 mm)	13" (330 mm)	13" (330 mm)	13" (330 mm)	14" (356 mm)	11" (279 mm)
B	Backwall to unit / De la paroi arrière au dispositif	11" (279 mm)	12" (305 mm)	10" (254 mm)	10" (254 mm)	8" (203 mm)	7" (178 mm)	12" (305 mm)	13" (330 mm)
C	Adjacent wall to corner of unit / De la paroi adjacent au cion de dispositif	9" (229 mm)	10" (254 mm)	8" (203 mm)	8½" (216 mm)	6½" (165 mm)	6" (152 mm)		
D	Sidewall to connector / De la paroi latérale au connecteur	22" (559 mm)	29" (737 mm)	22" (559 mm)	22" (559 mm)	22" (559 mm)	22" (559 mm)	23" (584 mm)	16" (381 mm)
E	Backwall to connector / De la paroi arrière au connecteur	14" (356 mm)	15" (381 mm)	13" (330 mm)	13" (330 mm)	11" (279 mm)	10" (254 mm)	15" (381 mm)	15" (406 mm)
F	Adjacent wall to corner of unit / De la paroi adjacent au cion de connecteur	17½" (445 mm)	18½" (470 mm)	16½" (419 mm)	17" (432 mm)	15" (381 mm)	14½" (368 mm)		
G	† Front of door opening to edge of hearth / Le devant d'ouverture de porte au bord de coussin de coeur	USA 16" (406 mm) CND 18" (450 mm)							
H	† Side/back of unit to edge of hearth / Le latérale/arrière de dispositif au bord de coussin de coeur	USA 6" (152 mm) CND 8" (200 mm)							

CAUTION: An uninsulated smoke pipe must not pass through an attic, roof space, closet or similar concealed space, or through a floor, ceiling, wall, or partition, or any combustible construction.
† FLOOR PROTECTION: If a stove is installed on a combustible floor, it must have a pedestal attached and be on a NON COMBUSTIBLE hearth pad
* ALL CLEARANCES CAN BE REDUCED WITH SHIELDING ACCEPTABLE TO THE LOCAL AUTHORITY.
SINGLE WALL:
IN CANADA: Any ULC-S629 listed chimney system with the accompanying listed single wall vent connector.
IN U.S.A.: Any UL 103 HT listed chimney system with the accompanying listed single wall vent connector.
**DOUBLE WALL :
IN CANADA: Any ULC-S629 listed chimney system with the accompanying listed double wall vent connector.
IN U.S.A.: Any UL 103 HT listed chimney system with the accompanying listed double wall vent connector.
DOUBLEWALL IS REQUIRED FOR MOBILE HOME INSTALLATIONS.

MISE EN GARDE: Un uninsulated tuyau de fumée ne doit pas passer par un grenier, un espace de toit, le placard ou l'espace dissimulé similaire, ou par un plancher, un plafond, un mur, ou une cloison, ou une construction combustible.
† PROTÉGER LE PLANCHER: Si une cuisinière est installée sur un sol combustible, il doit avoir un piédestal attache et être sur un coussinet non- combustible.
TOUS "ESPACES LIBRES AUX MATERIAX COMBUSTIBLES" PEUVENT ÊTRE RÉDUITS AVEC PROTÉGEANT ACCEPTABLE À L'AUTORITÉ LOCALE.
Seul Connecteur de Mur:
Au Canada: Certifiée seul connecteur de mur avec toute systèmes de cheminée listée sous ULC-S629.
Aux États-Unis: Certifiée seul connecteur de mur avec toute systèmes de cheminée listée sous UL 103 HT.
**Double Connecteur de Mur:
Au Canada: Certifiée double connecteur de mur avec toute systèmes de cheminée listée sous ULC-S629.
Aux États-Unis: Certifiée double connecteur de mur avec toute systèmes de cheminée listée sous UL 103 HT.

	**Alcove (Use double wall pipe) / Alcôve (Utilisant le double connecteur de mur)	Model/Modèle 1200	Model/Modèle 1700
I	Total width / Largeur totale	55" (1397 mm)	51" (1295 mm)
J	Total height / Hauteur totale	78" (1981 mm)	72" (1829 mm)
K	Top of stove to ceiling / Le sommet de poêle au plafond	49" (1245 mm)	44" (1118 mm)
L	Sidewall to unit / De la paroi latérale au dispositif	15" (381 mm)	13" (330 mm)
M	Sidewall to connector / De la paroi latérale au connecteur	24" (610 mm)	22" (559 mm)
N	Backwall to unit / De la paroi arrière au dispositif	12" (305 mm)	8" (203 mm)
O	Backwall to connector / De la paroi arrière au connecteur	15" (381 mm)	11" (279 mm)
P	Maximum Depth / Profondeur maximum	48" (1220 mm)	48" (1220 mm)

DOUBLE CONNECTEUR DE MUR NÉCESSAIRES POUR INSTALLATION DANS LES MAISONS MOBILE.

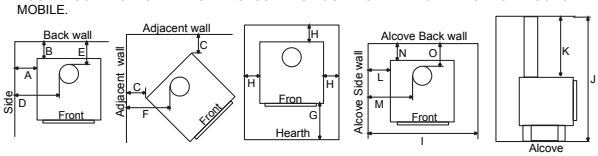

Models 1200 and 1700 inserts may be installed as an insert in a masonry fireplace. / On peut encastrer le modèles 1200 et 1700 dans un foyer de maçonnerie.

	Model / Modèle	1200 FPI	1700 FPI
A	To unshielded side wall	10" (254 mm)	10" (254 mm)
B	To an unshielded 8" (203 mm) mantle	21" (533 mm)	24" (610 mm)
C	To top facing (protruding ¾" [19 mm]) clearance	17½" (445 mm)	19½" (495 mm)
D	To side facing (protruding ¾" [19 mm]) clearance	1" (25 mm)	1" (25 mm)
E	† From door opening of unit to edge of floor protection	USA 16" (406mm) / CND 18" (450mm)	
F	† From side of unit to edge of floor protection	USA 6" (152 mm) / CND 8" (200 mm)	

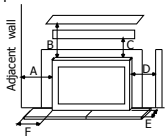

† FLOOR PROTECTION / PROTÉGER LE PLANCHER:
If unit is raised / Si l'appareil est soulevé:
0" - 2" (0mm - 51mm); 1" (25mm) non-combustible material with k value = 0.84 or equivalent / 1" (25mm) le matériel incombustible avec la valeur de k = 0.84 ou équivalent.
2" - 8" (51mm - 203mm); ½" (13mm) non-combustible material with k value = 0.84 or equivalent / ½" (13mm) le matériel incombustible avec la valeur de k = 0,84 ou équivalent.
Greater than/Plus grand que 8" (203 mm) any non-combustible material / n'importe quel type de matériel incombustible.

Operate only with the door and ash pan closed. Only open door to feed fire. For use with solid wood fuels only. Do not use grate or elevate-fire build wood fire directly on hearth. Do not overfire, do not obstruct combustion air openings. If heater or chimney connector glows, you are overfiring. Inspect and clean chimney frequently-under certain conditions of use, creosote buildup may occur rapidly. Keep furnishing and other combustibles well away from heater. Replace glass only with 5 mm thick ceramic glass. Optional component for FS: fan, electrical rating 115V, 60 Hz 1 Amp (Part # EFW-261). **Danger:** Risk of electrical shock. Disconnect power before servicing unit. Route cord away from heater.

L'opération du poêle doit se faire avec la porte et le cendrier fermé. N'ouvrir la porte que pour alimenter le feu. N'utilisez que des combustibles solides. N'employez pas de grille de foyer ou ne surélevez pas le feu. Mettez le bois à brûler directement sur l'âtre. Pour éviter la surchauffeur, ne mettez pas trop de bois. N'obstruez pas les ouvertures d'air comburant. Si le poêle ou le connecteur commencent à luire, vous surchauffez le poêle. Inspectez et nettoyez la cheminée souvent. Dans certaines conditions, le créosoté peut s'accumuler rapidement. Tenez loin les meubles et d'autres produits combustibles. Ne remplacez le verre qu'avec du verre céramique, 5mm épais. Équipement en option pour un FS: ventilateur caractéristiques assignées 115V, 60 Hz, 1 Amp (pièce # EFW-261) tenez le câble électrique loin du poêle. **Danger:** Le risque de choc électrique. Débrancher le dispositif avant d'entretenir.

CAUTION: HOT WHILE IN OPERATION. DO NOT TOUCH. KEEP CHILDREN, CLOTHING AND FURNITURE AWAY. CONTACT MAY CAUSE SKIN BURN. READ NAMEPLATE AND INSTRUCTIONS.

MISE EN GARDE: TRÈS CHAUD QUAND ALLUMÉ. NE TOUCHEZ PAS. TENIR LOIS LES ENFANTS, LES VÊTEMENTS ET LES MEUBLES. LE CONTACT PEUT CAUSER DES BRÛLURES. LISEZ ATTENTIVEMENT L'ÉTIQUETTE ET LES INSTRUCTIONS.

MADE IN CANADA / FABRIQUE AU CANADA

MANUFACTURED BY / FABRIQUE PAR: SHERWOOD INDUSTRIES LTD. VICTORIA BC CANADA

Enviro

DATE OF MANUFACTURE / DATE DE FABRICATION:

J F M A M J J A S O N D 2009 2010 2011 2012 2013

C-11922

Parts List

Reference #	Description	Part #
1	120F (49C) Ceramic Fan Temperature Sensor	EC-001
2	Insert Burner Switch	EC-026
3	FPI Fan Controller 115V	EC-039
4	Domestic Power Cord 115V	EC-042
5	Heyco Strain Relief	EC-044
6	Wood Door Gasket	EF-168
7	Glass with Tape	10-000
8	Enviro Logo Gel Decal	50-322
9	1200 & 1700 Front Secondary Air Tube A	50-1099
10	1700 Rear Secondary Air Tube C	50-1100
11	1700 Middle Secondary Air Tube B	50-1101
12	1200 Secondary Air Tube Rear E	50-1102
13	1200 Secondary Air Tube Middle D	50-1103
14	Pumice Brick 3” x 9”	50-1104
15	Pumice Brick 4.5” x 9”	50-1105
16	Glass Retainer Kit (With Screws)	50-1122
17	1200 & 1700 Left Shield Assembly	50-1144
18	1200 & 1700 Right Shield Assembly	50-1145
19	1200 C-Cast Ceramic Baffle (1 Piece)	50-1146
20	1700 C-Cast Ceramic Baffle (1 Piece)	50-1147
21	1200 & 1700 Insert Flue Collar Assembly	50-1148
22	1200 & 1700 Cast Latch	50-1381
23	1200 & 1700 Ceramic Flue Gasket	50-1413
24	Kodiak/Venice FPI Angled Flue Collar	50-1565
25	1200 & 1700 Insert Replacement Fan	50-1711
26	Woodstove Poker	50-1816
27	Fireplace Insert Surround Panel	50-1961
28	Fireplace Insert Base Shelf	50-1986
29	1200V & 1700V Cast Top	50-2000
30	1200V & 1700V Left Fan Shroud	50-2016
31	1200V & 1700V Right Fan Shroud	50-2017
32	Door Handle Complete	50-2018
33	Door Complete	50-2019
34	1200V & 1700V Left Fan Shroud Complete	50-2020
	Venice Owner’s Manual	50-2034

Parts Diagram

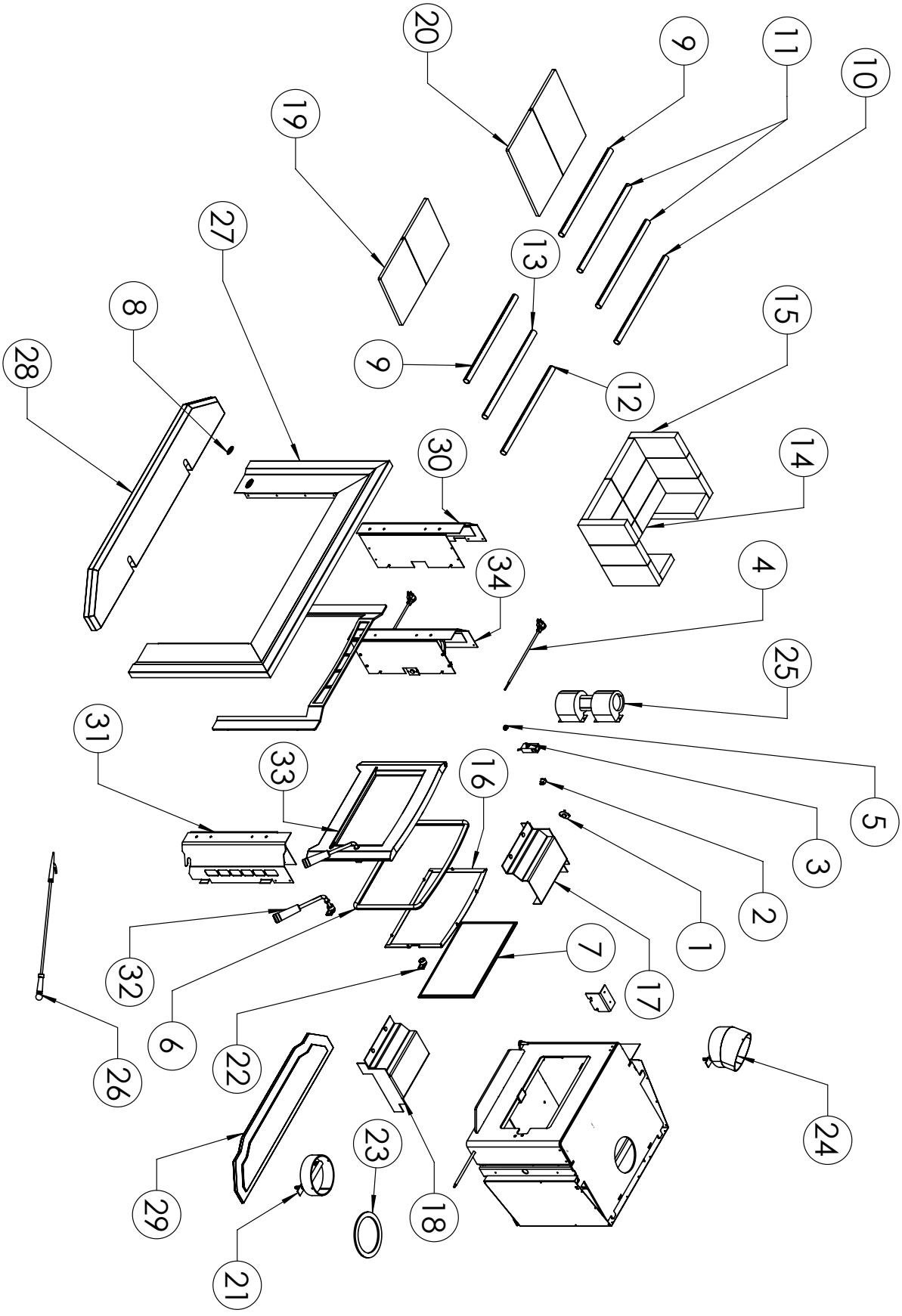

Warranty

Sherwood Industries Ltd. is the manufacturer of the Enviro line of heating products. At Sherwood Industries, our commitment to the highest level of quality and customer service is the most important thing we do. Each Enviro stove is built on a tradition of using only the finest materials and is backed by our Exclusive Lifetime Limited Warranty to the original purchaser. With Enviro, you're not just buying a stove, you're buying a company with years of unequalled performance and quality.

Limited Lifetime Warranty:
Under this warranty, Sherwood Industries Ltd. covers the stove body and accessories against defects in materials and workmanship, for part repair or replacement for the first seven (7) years and limited labour for the first two (2) years to the original purchaser. This Warranty covers: Firebox, Stainless Steel Secondary Air Tubes, Cabinet Sides, C-Cast Ceramic Baffle Baffle, Surround Panels, Pedestals, Legs, Ceramic Glass, Slider Control and Cast Iron Door Assembly against defects. Please see the exclusions and limitation section below as certain restrictions and exclusions apply to this warranty.

Limited Two (2) Year Warranty:
Under this warranty, Sherwood Industries Ltd. covers all electrical components against defects in materials and workmanship, for part repair or replacement for the first two (2) years and limited labour for the first two (2) years to the original purchaser. Please see the exclusions and limitation section below as certain restrictions and exclusions apply to this warranty.

Limited One (1) Year Warranty:
Under this warranty, Sherwood Industries Ltd. covers all exterior surface finishes against defects in materials and workmanship, for part repair or replacement and limited labour for the first year to the original purchaser. Please see the exclusions and limitation section below as certain restrictions and exclusions apply to this warranty.

How the Warranty Works

1. All warranties by the manufacturer are set herein and no claim shall be made against the manufacturer on any oral warranty or representation. All claims under this Limited Warranty must be made in writing by your dealer.
2. Any stove or part thereof that is repaired or replaced during the Limited Warranty period will be warranted under the terms of the Limited Warranty for a period not exceeding the remaining term of the original Limited Warranty or six (6) months, whichever is longer.
3. For any part or parts of this stove, which in our judgment show evidence of defects, Sherwood Industries Ltd. reserves the option to repair or to replace the defective product through an accredited distributor or agent, provided the defective part is returned to the distributor or agent, transportation prepaid, if requested. Sherwood Industries Ltd. may chose to buy back the item at the cost the dealer was invoiced.
4. If you discover a problem that you think may be covered by the Limited Warranty, you MUST REPORT it to your Enviro dealer WITHIN 30 DAYS, giving them proof of purchase and the date of purchase. The dealer will investigate the problem and work with Sherwood Industries Ltd. to determine whether the problem:
   a) Is covered by the Limited Warranty or
   b) Can be fixed in your home or does the product need to be returned to Sherwood Industries Ltd. for repair.
5. If Sherwood Industries Ltd. determines that the stove needs to be returned to Sherwood Industries Ltd. for repair, the customer has the responsibility and the expense of removing it from their home and shipping it to Sherwood Industries Ltd. If the problem is covered by the Warranty, Sherwood Industries Ltd. will replace the item at their discretion and the customer will be responsible for return shipping and re-installation in their home.

6. If the problem is not covered by the Limited Warranty, the customer will be responsible for all repair costs, as well as all storage, shipping and the cost of removing and re-installing the stove.

If you are not satisfied with the service provided by the Enviro dealer, write to Sherwood Industries Ltd. at the address listed on the last page of the Owner's Manual. Include the date you bought the product and a description of the problem.

Exclusions and Limitations:

1. This Warranty does not cover tarnish, discoloration or wear on the plating or paint.
2. This Warranty does not cover gasket material.
3. A qualified installer must install this stove. This Limited Warranty covers defects in materials and workmanship only if the product has been installed in accordance with local building and fire codes; in their absence refer to the owner's manual. If the product is damaged or broken as a result of any alteration, willful abuse, mishandling, accident, neglect, or misuse of the product, the Limited Warranty does not apply.
4. The stove must be operated and maintained at all times in accordance with the instructions in the Owner's Manual. If the unit shows signs of neglect or misuse, it is not covered under the terms of this Warranty policy. Performance problems due to operator error will not be covered by the Limited Warranty policy.
5. As this is a heating appliance, some changes in colour of surface finishes may occur. This is not a flaw and as such is not covered under this warranty.
6. Some minor expansion, contraction, or movement of certain parts and resulting noise, is normal and not a defect and, therefore, is not covered under this Limited Warranty.
7. Misuse includes over-firing. This will result if the stove is used in such a way that one or more of the plates glows red. Over-firing can be identified later by warped plates and paint pigment being burnt off. Over-firing this appliance can cause serious damage and will nullify the Limited Warranty.
8. The Limited Warranty will cover glass thermal breakage only and will not cover misuse of the stove glass, including but not limited to:

a) Glass that is struck, has surface contaminates or has had harsh or abrasive cleaners used on it.

b) If the door is slammed or is closed while wood in the firebox is protruding out the stove opening thus striking the glass.

9. This warranty does not cover products made or provided by other manufacturers and used in conjunction with the operation of this stove without prior authorization from Sherwood Industries Ltd. The use of such products may nullify the Limited Warranty on this stove. If unsure as to the extent of this Limited Warranty, contact your authorized Enviro dealer before installation.
10. Sherwood Industries Ltd. will not be responsible for inadequate performance caused by environmental conditions.
11. The Limited Warranty does not cover installation and operational related problems such as use of downdrafts or spillage caused by environmental conditions. Environmental conditions include but are not limited to nearby trees, buildings, roof tops, wind, hills, mountains, inadequate venting or ventilation, excessive offsets, negative air pressures or other influences caused by mechanical systems such as furnaces, fans, clothes dryers etc.
12. The Limited Warranty does not cover damage caused by burning salt-saturated wood, corrosive driftwood, chemically treated wood or any fuel not recommended in the Owner's Manual (use cord wood only).

    The Limited Warranty is void if:

    a) The stove has been operated in atmospheres contaminated by chlorine, fluorine or other damaging chemicals.

    b) The stove is subject to submersion in water or prolonged periods of dampness or condensation.

    c) Any damage to the unit, combustion chamber or other components due to water, or weather damage which is the result of, but not limited to, improper chimney/venting installation.

    d) Salt air in coastal areas or high humidity can be corrosive to the finish; these environments can cause rusting. Damage caused by salt air or high humidity is not covered by the Limited Warranty.
13. Exclusions to the Limited Warranty include: injury, loss of use, damage, failure to function due to accident,

negligence, misuse, improper installation, alteration or adjustment of the manufacturer's settings of components, lack of proper and regular maintenance, alteration, or act of God.

14. The Limited Warranty does not cover damage caused to the stove while in transit. If this occurs, do not operate the stove and contact your courier and/or dealer.
15. The Limited Warranty does not extend to or include paint, door or glass gaskets or firebricks damage caused by normal wear and tear, such as paint discoloration or chipping, worn or torn gaskets, chipped or cracked firebrick, etc.
16. The Limited Warranty does not include damage to the unit caused by abuse, improper installation, or modification of the unit.
17. Damage to plated surfaces caused by fingerprints, scratches, melted items, or other external scores and residues left on the plated surfaces from the use of abrasive cleaners or polishes is not covered in this warranty.
18. The Limited Warranty does not cover tarnish, discoloration or wear on the plated surfaces.
19. Sherwood Industries Ltd. is free of liability for any damages caused by the stove, as well as inconvenience expenses and materials. The Limited Warranty does not cover incidental or consequential damages.
20. The Limited Warranty does not cover any loss or damage incurred by the use or removal of any component or apparatus to or from the Enviro stove without the express written permission of Sherwood Industries Ltd. and bearing a Sherwood Industries Ltd. label of approval.
21. Any statement or representation of Enviro products and their performance contained in Enviro advertising, packaging literature, or printed material is not part of the Limited Warranty.
22. The Limited Warranty is automatically voided if the stove's serial number has been removed or altered in any way. If the stove is used for commercial purposes, it is excluded from the Limited Warranty.
23. No dealer, distributor, or similar person has the authority to represent or warrant Enviro products beyond the terms contained within the Limited Warranty. Sherwood Industries Ltd. assumes no liability for such warranties or representations.
24. Sherwood Industries Ltd. will not cover the cost of the removal or re-installation of the stove, hearth, facing, mantels, venting or other components.
25. Labour to replace or repair items under this Limited Warranty will be covered per our warranty service fee reimbursement schedule. Labour rates are set per component and as such total labour costs may not be covered.
26. Sherwood Industries Ltd. is not liable for freight or labour on any stove replaced in-field and is not liable for travel costs for service work. In the event of in-home repair work, the customer will pay any in-home travel fees or service charges required by the Authorized Dealer.
27. At no time will Sherwood Industries Ltd. be liable for any consequential damages which exceed the purchase price of the unit. Sherwood Industries Ltd. has no obligation to enhance or modify any stove once manufactured (example: as a stove evolves, field modifications or upgrades will not be performed).
28. This Limited Warranty is applicable only to the original purchaser and it is non-transferable.
29. This warranty only covers Enviro products that are purchased through an authorized Enviro dealer.
30. If for any reason any section of the Limited Warranty is declared invalid, the balance of the warranty remains in effect and all other clauses shall remain in effect.
31. The Limited Warranty is the only warranty supplied by Sherwood Industries Ltd., the manufacturer of the stove. All other warranties, whether express or implied, are hereby expressly disclaimed and the purchaser's recourse is expressly limited to the Limited Warranty.
32. Sherwood Industries Ltd. and its employees or representatives will not assume any damages, either directly or indirectly, caused by improper usage, operation, installation, servicing or maintenance of this stove.
33. Sherwood Industries Ltd. reserves the right to make changes without notice. Please complete and mail the warranty registration card and have the installer fill in the installation data sheet in the back of the manual for warranty and future reference.
34. Sherwood Industries Ltd is responsible for stocking parts for a maximum of seven (7) years after discontinuing the manufacture or incorporation of the item into its products. An exception to this would be if an OEM supplier is not able to supply a part.

Installation Data Sheet

The following information must be recorded by the installer for warranty purposes and future reference.

NAME OF OWNER:

_____

ADDRESS:

_____

_____

_____

PHONE:_____

NAME OF DEALER:

_____

ADDRESS:

_____

_____

_____

PHONE:_____

MODEL:_____

SERIAL NUMBER:_____

DATE OF PURCHASE: _____(dd/mm/yyyy)

DATE OF INSTALLATION:_____(dd/mm/yyyy)

INSTALLER'S SIGNATURE:

_____

NAME OF INSTALLER:

_____

ADDRESS:

_____

_____

_____

PHONE:_____

MANUFACTURED BY:
SHERWOOD INDUSTRIES LTD.
6782 OLDFIELD RD. SAANICHTON, BC, CANADA V8M 2A3
www.enviro.com
June 2, 2009
C-11981