SHERWOOD INDUSTRIES IS AN ENVIRONMENTALLY RESPONSIBLE COMPANY. THIS MANUAL IS PRINTED ON RECYCLED PAPER.

PLEASE KEEP THESE INSTRUCTIONS FOR FUTURE REFERENCE

Enviro

Sonnet

BY: SHERWOOD INDUSTRIES LTD

OWNER'S MANUAL

INSTALLER:
Leave this manual with the appliance.

CONSUMER:
Retain this manual for future reference.



WHAT TO DO IF YOU SMELL GAS

- **Open windows/extinguish any open flame.**
- **Do not try to light any appliance.**
- **Do not touch any electrical switch or use any phone in your building.**
- **Immediately call your gas supplier from a neighbour's phone. Follow the gas supplier's instructions.**
- **If you cannot reach your gas supplier, call the fire department.**

FOR YOUR SAFETY
Do not store or use gasoline or other flammable vapours and liquids in the vicinity of this or any other appliance.

This appliance is only for use with the type of gas indicated on the rating plate. This appliance is not convertible for use with other gases, unless a certified kit is used.

WARNING: If the information in this manual is not followed exactly, a fire or explosion may result causing property damage, personal injury or loss of life. Installation and service must be performed by a qualified installer, service agency or the gas supplier.

INTERTEK CM Warnock Hersey C US

Massachusetts installations (Warning): This product must be installed by a licensed plumber or gas fitter when installed within the Commonwealth of Massachusetts. Other Massachusetts code requirements: Flexible connector must not be longer than 36in., a shut off valve must be installed; only direct vent sealed combustion products are approved for bedrooms/bathrooms. A carbon monoxide detector is required in all rooms containing gas fired direct vent appliances. The fireplace damper must be removed or welded in the open position prior to installation of a fireplace insert.

Safety Precautions

FOR SAFE INSTALLATION AND OPERATION OF YOUR "ENVIRO" HEATER, PLEASE CAREFULLY READ THE FOLLOWING INFORMATION:

- All ENVIRO gas-fired appliances must be installed in accordance with their instructions. Carefully read all the instructions in this manual first. Consult the building authority having jurisdiction to determine the need for a permit prior to commencing the installation.
- **NOTE:** Failure to follow these instructions could cause a malfunction of the fireplace, which could result in death, serious bodily injury, and/or property damage.
- Failure to follow these instructions may also void your fire insurance and/or warranty.

GENERAL

- Installation and repair should be done by a qualified service person. The appliance should be inspected before the first use and, at least, annually by a qualified service person. More frequent cleaning may be required due to excessive lint from carpeting, bedding material, etc. It is imperative the control compartments, burners and circulating air passageways of the appliance be kept clean.
- Due to high temperatures, the appliance should be located out of high traffic areas and away from furniture and draperies.

Children and adults should be alerted to the hazards of high surface temperatures and should stay away to avoid burn or clothing ignition.

- Young children should be carefully supervised when in the same room as the appliance. Toddlers, young children and others may be susceptible to accidental contact burns. A physical barrier is recommended if there are at risk individuals in the house. To restrict access to a fireplace or stove install an adjustable safety gate to keep toddlers, young children and other at risk individuals out of the room and away from hot surfaces.
- Clothing or other flammable materials should not be placed on or near the appliance.

WARNING



HOT GLASS WILL CAUSE BURNS

DO NOT TOUCH GLASS UNTIL COOLED.

NEVER ALLOW CHILDREN TO TOUCH GLASS.

FOR YOUR SAFETY

- Installation and service must be performed by a qualified installer, service agency or gas supplier.
- This installation must conform to local codes or, in the absence of local codes, to the current CAN/CGA-B149 installation code (Canada) or National Fuel Gas Code ANSI Z223.1.2 (USA)
- To prevent injury, do not allow anyone who is unfamiliar with the stove to operate it.
- **To prevent injury, if the pilot or pilot and burners have gone out on their own, open the glass door and wait 5 minutes to air out before attempting to re-light the stove.**
- Always keep the area around these appliances clear of combustible material, gasoline and other flammable liquids and vapours.
- These appliances should not be used as a drying rack for clothing or for hanging Christmas stockings/decorations.
- Due to the paint curing on the stove, a faint odor and slight smoking will likely be noticed when the stove is first used. Open a window until the smoking stops.

Always connect this gas stove to a vent system and vent to the outside of the building envelope. Never vent to another room or inside the building. Make sure the specified vent pipe is used, properly sized and of adequate height to provide sufficient draft. Inspect the venting system annually for blockage and signs of deterioration.

WARNING: Failure to position the parts in accordance with the diagrams in this booklet, or failure to use only parts specifically approved with this appliance, may result in property damage or personal injury.

WARNING: Do not operate with the glass front removed, cracked or broken. Replacement of the glass should be done by a licensed or qualified service person.

- Never use solid fuels such as wood, paper, cardboard, coal, or any flammable liquids, etc., in this appliance.
- Do not use this heater if any part has been under water. Immediately call a qualified service technician to inspect the heater and to replace any part of the control or gas control systems that have been under water.
- Do not abuse the glass by striking it or slamming the door shut.
- If the Sonnet unit is pulled out of its installation, and the vent-air intake system is disconnected for any reason, ensure that the vent-air intake pipes are reconnected and re-sealed in accordance to the instructions noted in Initial Installation - Venting Fireplace Inserts.

Table of Contents

Safety Precautions....2
Table of Contents....3
Codes And Approvals....4
Specifications....5
- Rating Label Location....5
- Dimensions....5

Operating Instructions....7
- Lighting and Turning Off Instructions....7
- Remote Handset Controls....8

Control Panel....10
- Blower Speed....10
- Normal Sounds During Operation....10
- Adjusting Venturi Air Settings....10

Maintenance And Service....11
- Cleaning The Glass....11
- Cleaning The Firebox....11
- Replacing The Glass....11
- Check Pilot and Burner Flames....11
- Glass Door Removal....12
- Cleaning The Painted Surfaces....12
- Replacing The Batteries....12
- Changing Remote Handset Code & Resetting Receiver....13
- Removing Valve Cover....14
- Fuel Conversion....14

Initial Installation....17
- Clearances to Combustibles....17
- Minimum Fireplace Size....17
- Direct Vent Model....17
- B-Vent Model....18
- Automatic Flue Gas Spill Switch - B-Vent Model Only....18
- Preparing Your Sonnet For Installation....18
- Converting A Direct Vent Fireplace To A B-Vent Fireplace....19
- Venting Fireplace Inserts....21
- Direct Vent Vertical Vent Termination....23
- Electrical Requirements....25
- Optional Fan Kit....26
- Gas Line Connection....27
- Adjusting The Pilot Flame....29
- Remote Handset Wall Bracket Installation....29

Secondary Installation....30
- Optional Base Shelf & Riser....30
- Installation of Adjustable Surround And Trim....30
- Optional Cast Andiron & Grate....34
- Brick Panel Installation....34
- Log Set and Ember Installation....35

Trouble Shooting....38
Parts List....41
Parts Diagram - Components....43
Parts Diagram - Options....44
Warranty....45
Installation Data Sheet....48

Codes And Approvals

DIRECT VENT: This type is identified by the suffix DV. This appliance draws all of its air for combustion from outside the dwelling, through a specially designed vent pipe system.

This appliance has been tested and approved for installations from 0 feet to 4500 feet (1372 m) above sea level.

BV: This Vented appliance draws all of its combustion air from the dwelling and must be vented using listed B or L vent. May also be vented through a conventional chimney using a chimney liner kit.

This appliance has been tested and approved for installations from 0 feet to 4500 feet (1372 m) above sea level.

In the USA: The appliance may be installed at higher altitudes. Please refer to your American Gas Association guidelines which state: the sea level rated input of Gas Designed Appliances installed at elevations above 2000 (610 m) feet is to be reduced 4% for each 1000 feet (305 m) above sea level. Refer also to local authorities or codes which have jurisdiction in your area regarding the de-rate guidelines.

In Canada: When the appliance is installed at elevations above 4500 feet (1372 m), the certified high altitude rating shall be reduced at the rate of 4% for each additional 1000 feet (305 m).

- This appliance has been tested by INTERTEK (**Warnock Hersey**) and found to comply with the established VENTED GAS FIREPLACE HEATER standards in CANADA and the USA as follows:

VENTED GAS FIREPLACE HEATER (SONNET BV/DV; NG/LPG)

TESTED TO: ANSI Z21.88-2005/CSA 2.33-2005 VENTED GAS FIREPLACE HEATERS

CAN/CGA 2.17-M91 GAS FIRED APPLIANCES FOR HIGH ALTITUDES

CSA P.4.1-02 TESTING METHOD FOR MEASURING ANNUAL FIREPLACE EFFICIENCY

This ENVIRO Sonnet Fireplace:

- Has been certified for use with either natural or propane gases. (See rating label.)
- Is not for use with solid fuels.
- Is approved for bedroom or bed sitting room. (**IN CANADA**: must be installed with a permanent wall thermostat for bedroom installations is required. The remote handset included with this unit has a thermostat in its control system and a design feature that will turn the main burner off if there is a 'no communicate' condition caused by the handset being removed from the normal range of operation (up to 20-25ft (6.1-7.6m)) or a low battery condition in either the receiver or the hand set. Consult the authority having local jurisdiction in your area. **IN USA**: see current ANSI Z223.1 for installation instructions.)
- Must be installed in accordance with local codes. If none exist, use current installation code CAN/CGA B149 in Canada or ANSI Z223.1/NFPA 54 in the USA.
- Must be properly connected to an approved venting system and not connected to a chimney flue serving a separate solid-fuel burning appliance.
- Is not approved for closet or recessed installations.

IMPORTANT NOTICE (Regarding first fire up): When the unit is turned on for the first time, it should be turned onto high without the fan on for the first 4 hours. This will cure the paint, logs, gasket material and other products used in the manufacturing process. It is advisable to open a window or door, as the unit will start to smoke and can irritate some people. After the unit has gone through the first burn, turn the unit off, let the unit get cold then remove the glass door and clean it with a good gas fireplace glass cleaner, available at your local ENVIRO dealer. See "Door Removal" and "Cleaning The Glass" sections.

NATIONAL FIREPLACE INSTITUTE®

NFI

CERTIFIED

www.nficertified.org

We recommend that our gas hearth products be installed and serviced by professionals who are certified in the U.S. by the National Fireplace Institute® (NFI) as NFI Gas Specialists.

Specifications

Rating Label Location:

The rating label is located under the control panel and is attached to a rectangular metal sheet that is chained to the fireplace.

Dimensions:

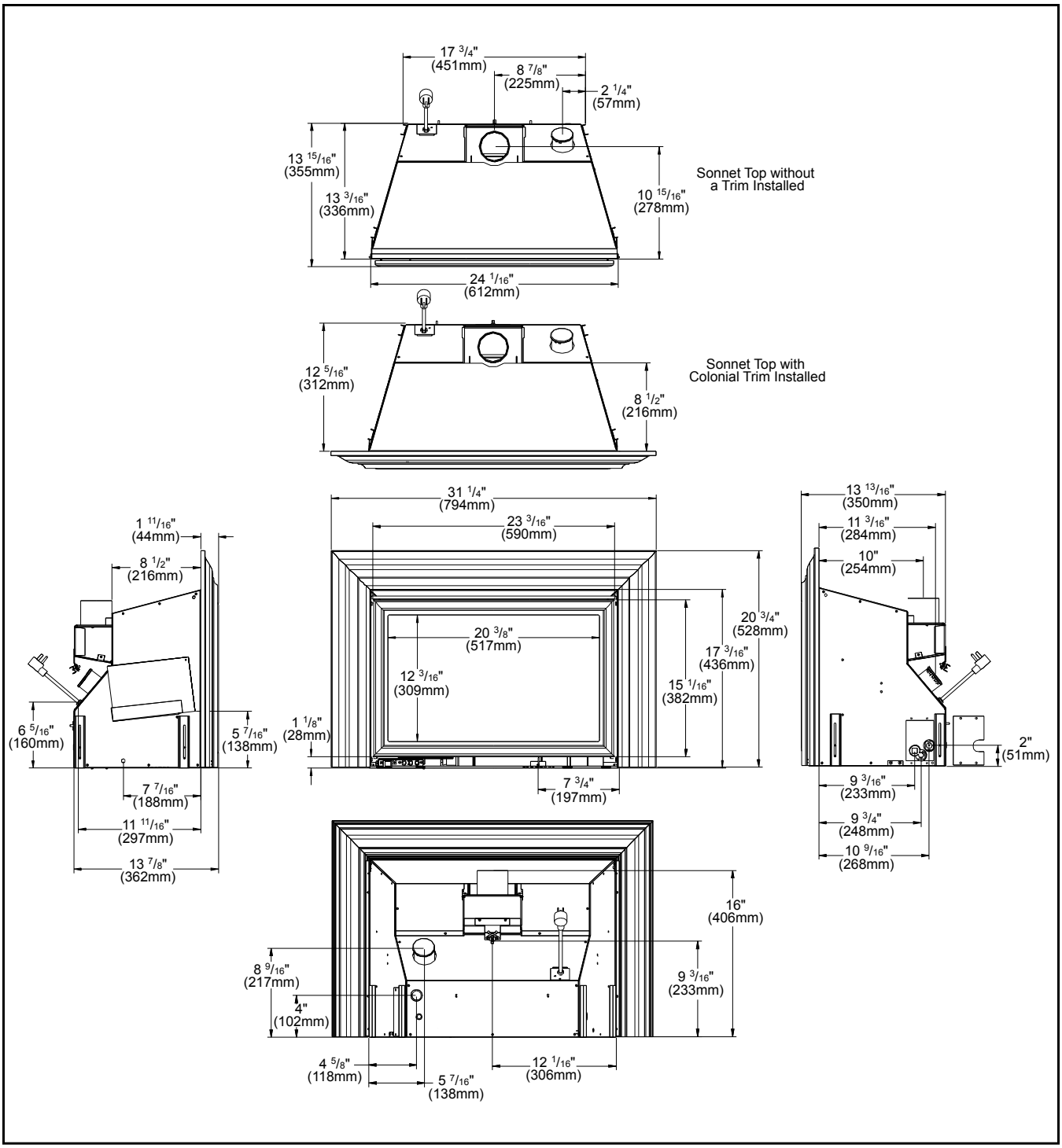

Figure 1: Sonnet Exterior Dimensions With Colonial.

Specifications

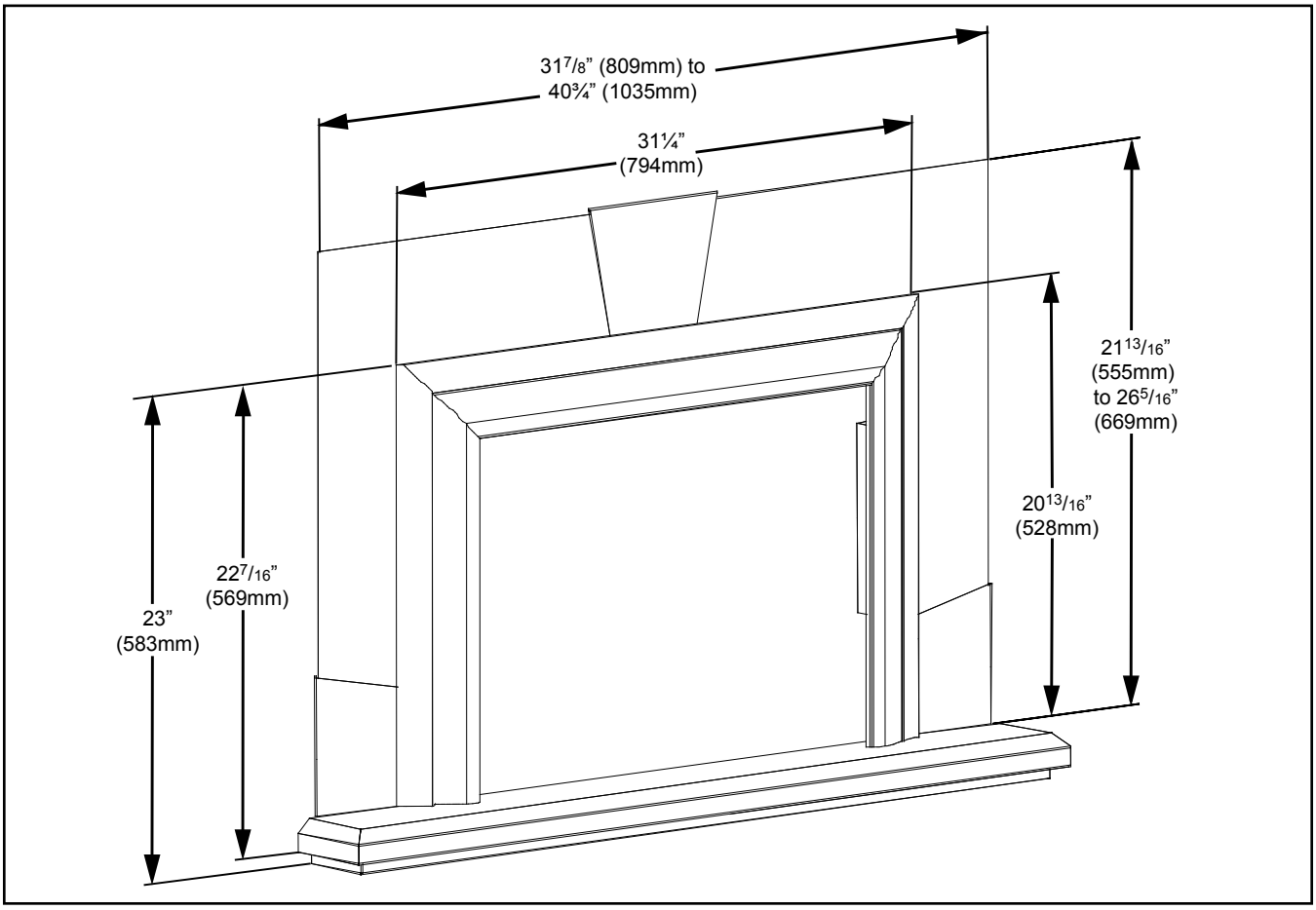

Figure 2: Sonnet Adjustable Surround, Classic, and Base Shelf with Riser.

Table 1: Sonnet Options Dimensions.

	Colonial - 3 Sided	**Colonial - 4 Sided**	**Classic - 3 Sided**	**Classic - 4 Sided**
Height	20 13/16" (528mm)	24 9/16" (624mm)	20 13/16" (528mm)	24 9/16" (624mm)
Width	31¼" (794mm)	31¼" (794mm)	31¼" (794mm)	31¼" (794mm)
	Adjustable Surround - Small Corners		**Adjustable Surround - Large Corners**	
Height	21¾" (552mm) to 24" (609mm) or max 24⅞" (631mm)		24" (609mm) to 26¼" (666mm) or max 27⅛" (689mm)	
Width	31⅞" (809mm) to 36 5/16" (922mm) or max 37¼" (947mm)		36¼" (921mm) to 40¾" (1035mm) or max 41¾" (1061mm)	
Trimmable Surround	Height		Width	
	27¾" (705mm)		41 13/16" (1062mm)	
	Base Shelf		**Base Shelf Riser**	
Height	1⅝" (41mm)		2⅛" (54mm)	
Width	43 7/16" (1103mm)		41⅞" (1063mm)	
Depth	Bottom 4⅞" (112mm); Top 3 13/16" (97mm)		3 11/16" (94mm)	

Operating Instructions

For Your Safety, Read Safety Precautions And Lighting Instructions Before Operating

WARNING: IF YOU DO NOT FOLLOW THESE INSTRUCTIONS EXACTLY A FIRE OR EXPLOSION MAY RESULT, CAUSING PROPERTY DAMAGE, PERSONAL INJURY OF LOSS OF LIFE.

Lighting and Turning Off Instructions:

CAUTION: Hot while operating. Do not touch, severe burns may result. Keep children, clothing, furniture, gasoline or other flammable vapors away.

CAUTION: Do not operate this fireplace with the glass removed, cracked or broken. Replacement of the panel should be done by a licensed or qualified person! This appliance needs fresh air for safe operation and must be installed so there are provisions for adequate combustion and ventilation air. Keep burner and control compartment clean. See installation and operating instructions accompanying appliance.
WARNING: Improper installation, adjustment, alteration, service or maintenance can cause injury or property damage, or loss of life. Refer to owner's information manual provided with this appliance. For assistance or additional information consult a qualified installer, service agency or the gas supplier. Installation and service must be performed by a qualified installer, service agency, or the gas supplier.

FOR YOUR SAFETY READ BEFORE OPERATING

WARNING: IF YOU DO NOT FOLLOW THESE INSTRUCTIONS EXACTLY, A FIRE OR EXPLOSION MAY RESULT CAUSING PROPERTY DAMAGE, PERSONAL INJURY OR LOSS OF LIFE.

A) This appliance has a pilot which must be lighted by hand. When lighting the pilot, following these instructions exactly.
B) BEFORE LIGHTING smell all around the appliance area for gas. Be sure to smell next to the floor because some gas is heavier than air and will settle on the floor.
WHAT TO DO IF YOU SMELL GAS: Do not try to light any appliance. Do not touch any electrical switch: do not use any phone in your building. Immediately call your gas supplier from a neighbor's phone. Follow the gas suppliers instructions. If you cannot reach your gas supplier, call the fire department.
C) Use only your hand to push in or turn the gas control knob; NEVER use tools. If the knob will not push in or turn by hand, do not try to repair it. Call a qualified service technician. Force or attempted repair may result in a fire or explosion.
D) Do not use this appliance if any part has been under water. Immediately call a qualified service technician to inspect the appliance and to replace any part of the control system and any gas control which has been under water.

LIGHTING INSTRUCTIONS

1. STOP! Read the safety information above on this label.
2. Set thermostat to its lowest setting.
3. Turn off all electrical power to this appliance.
4. Turn main valve OFF by pushing the on/off button on the remote handset or on the control panel or alternatively, by turning the knob clockwise ↷ .
5. Wait five (5) minutes to clear out any gas. If you smell gas STOP! Follow "B" in the above safety information. If you do not smell gas go to the next step.
6. Ignite the unit by:
   a. Simultaneously press and hold the star ✧ and up arrow ▲ buttons on the remote handset or just the ON/OFF ◉ button on the control panel until a short acoustic signal confirms the start sequence has begun; release button(s). Continuing signal confirms the ignition sequence is in process.

OR

   b. If igniting the unit manually, turn the main valve ON by turning the knob counter clockwise ↶ . Push in the solenoid and light the pilot. Flame height can be adjusted manually by turning the hi/low knob.

NOTE: Once pilot ignition is confirmed the main gas will flow. If the pilot will not stay lit after several tries, press OFF button on the remote handset or control panel, or turn the main gas valve knob) to OFF and call your service technician or gas supplier.

7. Turn on the electrical power to the appliance.
8. Set thermostat to desired setting or use the remote handset or control panel to adjust flame. Press up arrow to increase flame height, press down arrow to decrease flame height or set appliance to pilot flame. For fine adjustment tap the up/down arrows.

TO TURN OFF GAS TO APPLIANCE

1. Set the thermostat to lowest setting or press OFF button on remote or control panel.

NOTE: Turn off all electrical power to this appliance if service is to be performed. Follow appliance manufacturer's instructions for gaining accessibility to the gas control.

C-11102

Figure 3: Lighting instruction label.



Low / Off / High Fan Rocker Switch | Smaller Flame | On/Off | Larger Flame

Figure 4: Control panel.

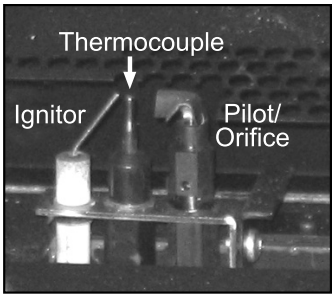

Figure 5: Ignition assembly.

The Sonnet can be controlled either with the control panel on the bottom left corner of the unit or with the handset remote control.

Operating Instructions

The Sonnet is designed to gradually lower or raise the flame as is needed in application. It normally does not just turn on and off. This is very dependant on the size of the room the unit is located in. During the first several operational cycles the electronics go through a learning process that establishes how the system will react to the environment it is in. It does so by determining the amount of time it takes for the temperature to rise 1°. It does this several times to maintain consistency. Once this has been learned it will respond the same way each time it is used. It is possible to relearn by removing the batteries from the receiver and re installing the batteries after several minutes have past. If there is no call for heat and the unit is in the lowest operation condition the valve will turn the burner to the off position. When there is a subsequent call for heat the burner will turn back on at the low setting. Should this not be adequate in application the valve will open more to allow more gas flow to the burner.

Remote Handset Controls:

The remote handset included with this unit has a thermostat in its control system and a design feature that will turn off the unit if there is a no communicate condition caused by the handset being removed from the normal range of operation (up to 20-25ft (6.1-7.6m)) or a low battery condition in either the receiver or the hand set. If one or more Sonnets are to be installed, confirm that the remote control signal codes are different for each unit, refer to Maintenance and Service - Changing Remote Handset Code.

Setting the Time

1. The display will flash after either: (a) Installing the battery or (b) Simultaneously pressing the ▲ (up arrow) and ▼ (down arrow).
2. Press ▲ (up arrow) to set the hour and the ▼ (down arrow) to set the minute.
3. Press OFF to return to manual mode or simply wait and it will automatically return to the manual mode.

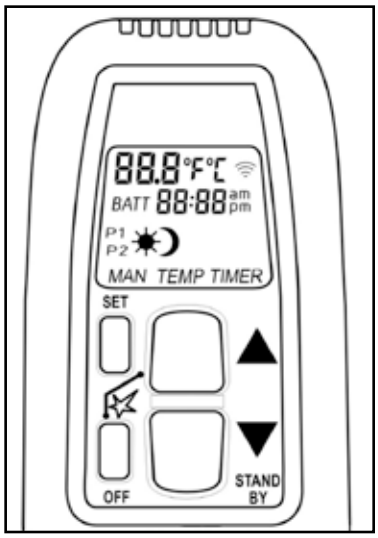

Figure 6: Remote Control.

Setting °C/24 hour or °F/12 hour Clock:

Press OFF and ▼ (down arrow) until display changes from Farenheit/12 hour clock to Celcius/24 hour clock and vice versa.

Automatic Pilot Mode:

If there is no transmission from the handset to the receiver within a six (6) hour period, the unit will go to standby (pilot) mode.

Adjustment of Flame Height:

In standby mode: Press ▲ (up arrow) to increase flame height. Press ▼ (down arrow) to decrease flame height or to set appliance at pilot flame. For fine adjustment tap the up/down arrows.

Mode Settings:



TEMP MODE – Daytime Temperature Mode (appliance must be in standby mode; pilot ignited): The room temperature is measured and compared to the set temperature. The flame height is then automatically adjusted to achieve the Daytime set temperature. This mode is manually turned on and off.



TEMP MODE – Nighttime Setback Temperature Mode (appliance must be in standby mode; pilot ignited): The room temperature is measured and compared to the Nighttime Setback temperature. The flame height is then automatically adjusted to achieve the Nighttime Setback temperature. This mode is manually turned on and off.

Operating Instructions

TIMER MODE – (appliance must be in standby mode; pilot ignited): The Timer mode is normally programmed to have two (2) ☀ TEMP Periods: P1 and P2. Between these two (2) periods, a lower operating temperature ☽ TEMP (or pilot only) can be set.
Note: that between those periods, if the thermostat is set to a certain minimum temp (example 58°F (14.5°C)), then the unit will modulate to maintain that temp.
For ☽ TEMP to operate as a thermostat, TEMP must be set at 40°F (4.5°C) or higher.
If the ☽ TEMP setting is decreased to --, the motor will turn the valve to the standby position in the moon times and await the next burner ☀ TEMP cycle.

NOTE: The display shows the set temperature every 30 seconds.

Changing the Mode of Operation

Briefly pressing the SET button changes the mode of operation in the following order:

MAN → ☀ TEMP → ☽ TEMP → TIMER → and back to MAN

NOTE: MAN mode can also be reached by pressing either the ▲ (up arrow) or the ▼ (down arrow).

"MAN" Mode - Manual Flame Height Adjustment

1. Press ▲ (up arrow) to turn on the main burner.
2. Press ▲ (up arrow) to increase the flame height.
3. Press ▼ (down arrow) to decrease the flame height or to go to pilot standby position.

NOTE: While pressing either button a symbol indicating transmission appears on the display. The receiver confirms transmission with an acoustic signal.

Setting the Temperature

1. Select either the ☀ TEMP MODE or the ☽ TEMP MODE by briefly pressing the SET button.
2. Hold the SET button until the TEMP display flashes.
3. Set the desired temperature with ▲ (up arrow) or ▼ (down arrow). NOTE: 4.5°C/40°F is the min. temperature setting.

NOTE: If you would like the Nighttime Setback temperature control to turn off, decrease the nighttime temperature until [---] appears on the display.

Setting the Timer

1. Select Timer mode by briefly pressing the SET button.
2. Press and hold the SET button until "TIMER" is displayed on the lower right hand side.
3. Press and hold the SET button until the P1 ☀ (sun symbol) and the time display flashes. Set the hour by pressing the ▲ (up arrow) and set the minutes by pressing the ▼ (down arrow).
4. Briefly press SET button for the next burner cycle time. Example: P1 ☽ (moon symbol) continue through P2 ☀ (sun symbol) and P2 ☽ (moon symbol).
5. Once all four (4) times are set, press OFF or simply wait to complete programming.

Operating Instructions

NOTE: The remote handset control instructions are on inside of remote's battery cover plate (see Figure 7).

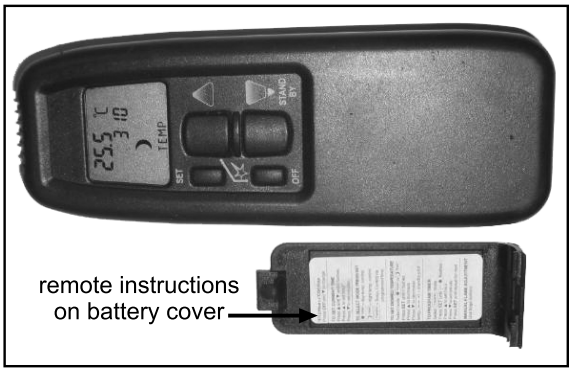

Figure 7. Remote Control Instruction.

Control Panel:

Press the larger flame to increase flame height. Press the smaller flame to decrease flame height. For fine adjustment tap the appropriate flame icon, refer to Figure 4. Can also be use to turn unit on or off.

Blower Speed:

The blower will come on only when the fireplace is up to temperature (approximately 20 minutes). Pressing the fan's three (3) position rocker switch on the unit's control panel will change the speed of the fan; it is Low/Off/High (refer to Figure 4). The fan can not be controlled with the handset.

Normal Sounds During Operation:

Table 2: Normal Sounds.

Component	Sound & Reason
Sonnet & Surrounds	Creaking when heating up or cooling down.
Burner	Light pop or poof when turned off; this is more common with LP units.
Temperature Sensor	Clicking when it senses to turn the blower on or off.
Blower / Fan	Air movement that increase and decreases with the speed of the blower. The blower is pushing the heat from the fireplace into the room.
Gas Control Valve	Dull click when turning on or off, this is the valve opening and closing.

Adjusting Venturi Air Settings:

There is one venturi adjustment. Use this venturi adjustment lever, shown in Figure 8, to achieve a proper and efficient flame. Pull the rod forward for more air or push it in for less air. Adjust lever until the flame pattern is similar to Figure 79.

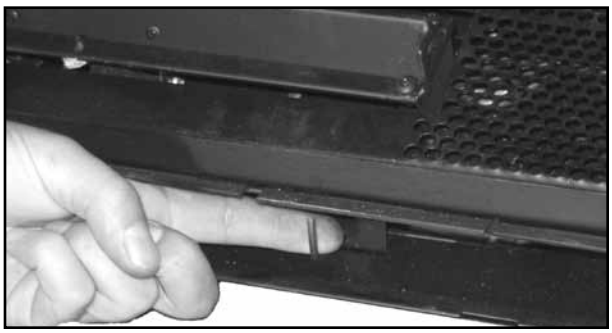

Figure 8: Adjusting the venturi air setting.

Maintenance And Service

Warning: Failure to position the parts in accordance with this manual, or failure to use only parts specifically approved with this appliance, may result in property damage or personal injury.

At least once a year, run through the following procedures to ensure the system is clean and working properly. Check the burner to see if all the ports are clear and clean. Check the pilot to make sure it is not blocked by anything. The pilot flame should be blue with little or no yellow on the tips.

The venting system must be periodically examined; it is recommended the examination is done by a qualified agency.

Cleaning The Glass:

When the fireplace is cool, remove the glass door. See Maintenance and Service - Glass Door Removal. Check the gasket material on the back of the glass, making sure that it is attached and intact.

During a cold start up, condensation will sometimes form on the glass. This is a normal condition with all fireplaces. However, this condensation can allow dust and lint to cling to the glass surface. Initial paint curing of the appliance can leave a slight film behind the glass, a temporary problem. The glass will need cleaning after the fireplace has cooled off from the first burn and about two weeks after first burn. **Use a mild glass cleaner and a soft cloth**. **Abrasive cleaners will damage the glass and plated surfaces.** Depending on the amount of use, the glass should require cleaning no more than two or three times a season. **Do not clean the glass when it is hot.**

Cleaning The Firebox:

Remove the logs carefully, as they are very fragile. Gently remove all the embers and rock wool and place on a paper towel. Vacuum the bottom of the firebox thoroughly. Carefully clean any dust off the logs and remove any lint from the burner and pilot. At this time, inspect the burner pan for cracking or severe warping. If a problem is suspected, contact the dealer. Check the logs for deterioration or large amounts of soot; a small amount on the bottom side of the logs is normal. Replace the logs and embers as in the Secondary Installation - Log Set and Ember Installation section. If new/more embers and rock wool are required, contact your nearest ENVIRO dealer.

Replacing The Glass:

The glass in the fireplace is a high temperature ceramic. If the glass is damaged in any way, a factory replacement is required (see Parts List). Wear gloves when handling damaged glass door assembly to prevent personal injury. When the glass door assembly is being transported, it must be wrapped in newsprint and tape and/or a strong plastic bag. Do not operate with the glass front removed, cracked or broken. Removal and replacement of the glass from the door **must** be done by a licensed or qualified service person. **The glass must be purchased from an ENVIRO dealer. No substitute materials are allowed.**

Check Pilot and Burner Flames:

Periodically do a visual check of the pilot flames. One flame should encompass the ignitor and thermocouple and the other should burn over the burner ports (see Figure 9). Also check that the burner is operating correctly, refer to Figure 77.

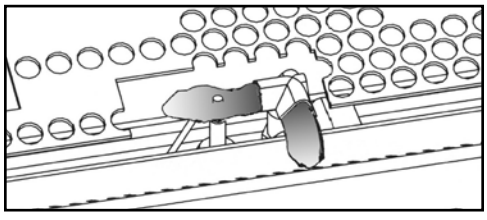

Figure 9: Pilot Flame.

Maintenance And Service

Glass Door Removal:

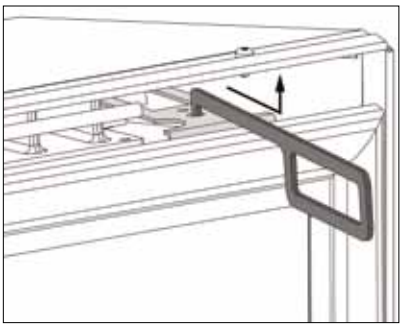

Figure 10: Door Release.

Remove the glass door by placing the hooked end of the door release tool in the hole on the door latch mechanism (see Figure 10) and pulling the latch out then up over the lip on the door. When the two (2) latches have been released, tilt the door forward and then lift up to unhook the bottom door tabs (see Figure 11).

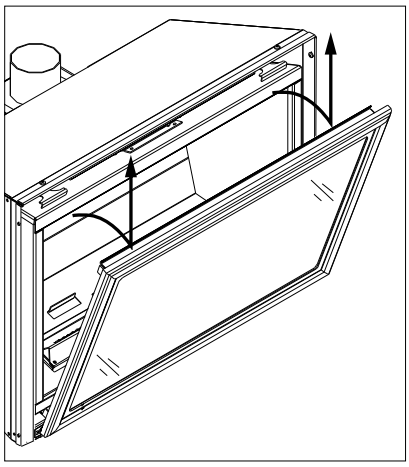

Figure 11: Door Removal.

Warning: Do not touch or attempt to remove the glass if the fireplace is not completely cold. **Never operate the fireplace with the glass removed.**

CAUTION GLASS MAY SEPARATE FROM DOOR.

Cleaning The Painted Surfaces:

Painted faces should be wiped with a damp cloth periodically.

Replacing The Batteries:

It is recommended that the batteries are replaced at the beginning of each heating season. Batteries must be changed when an acoustic error message is heard. Do not use metallic tooling to remove the batteries as it could cause a short that may render the receiver inoperable.

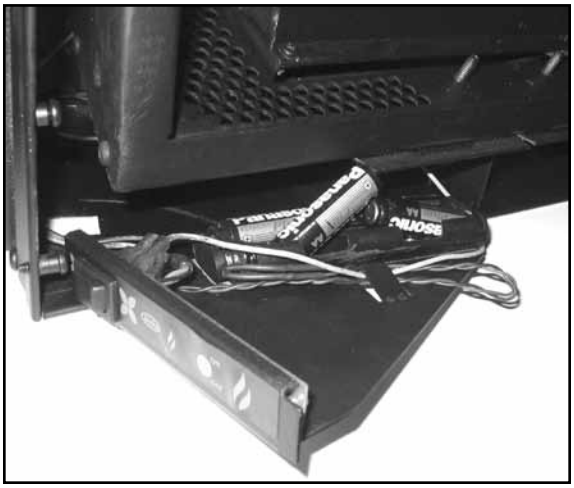

Figure 12: Control Panel & Battery Pack Bracket.

Table 3: Batteries Required for Sonnet.

	Quantity	Type of Battery
Receiver	4	1.5V "AA" (quality alkaline recommended)
Remote Handset	1	9V (quality alkaline recommended)

Remote Handset:
Remove handset backing, replace the 9V battery, and re-install handset backing (see Figure 13).

Receiver:
IMPORTANT: Do not put batteries directly in the receiver.

1. For fan units only - Unplug the power or turn off the electrical breaker for the unit.
2. Pull the right end of the control panel forward; it will pivot out (see Figure 12). The battery pack for the receiver is mounted to the same bracket as control panel
3. Replace the four (4) 1.5V "AA" batteries.
4. Push the control panel back into place.
5. Plug the unit in or turn on the electrical breaker for the unit.

Changing Remote Handset Code & Resetting Receiver:

A code is preset for the remote handset and receiver, but can be changed if required. If one or more Sonnets are to be installed, confirm that the remote control signal codes are different for each unit.To change the code, complete the following:

1. Change DIP switch position (shown at the top of Figure 13).
2. Press and hold the receiver's reset button (see Figure 14) until you hear two (2) acoustic signals. After the second longer acoustic signal, release the reset button and within the subsequent 20 seconds, press the (down arrow) on the remote handset until you hear an additional long acoustic signal confirming the new code is set.

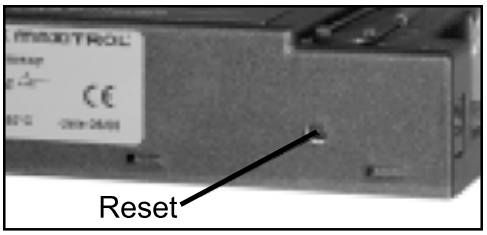

Figure 14: Receiver with Reset Button.



Figure 13: DIP Switch in Remote Handset Battery Compartment.



Figure 15: Resetting Receiver from Outside.

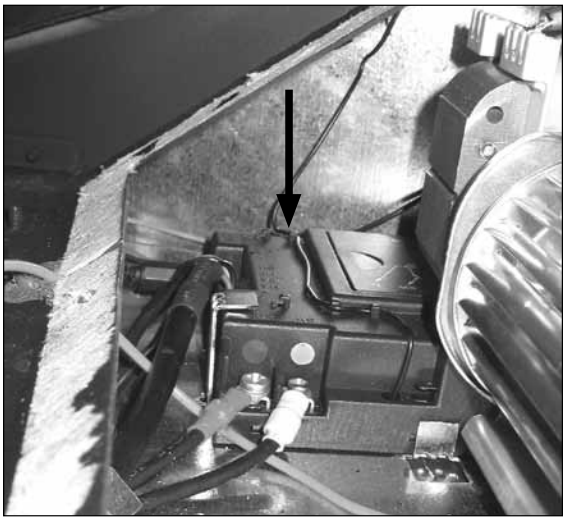

Figure 16: Resetting Receiver from Inside.

Methods for Resetting the Receiver:

Method 1 - From Outside the Cabinet.

The access hole for the reset button is located on the left side of the unit $8^{7}/_{16}$" (214mm) back from the front edge of the cabinet. Place a small screwdiver through the hole in the cabinet side (refer to Figure 15) and depress the reset button.

Method 2 - From Inside the Firebox.

Follow steps 1-4 in Removing Valve Cover - Maintenance And Service. Bend a paper clip to reach the reset button on the left side of the receiver (refer to Figure 16). Depress the reset button using the paper clip.

Removing Valve Cover:

The valve cover can be removed to access the gas valve, the fan, wiring harness, or other components.

1. Remove the glass door as shown in the Maintenance and Service - Glass Door Removal.
2. Carefully remove the log set, ember material, and brick panels, refer to Secondary Installation - Brick Panel Installation and Secondary Installation - Log Set and Ember Installation.
3. Using a T-20 screwdriver remove the two (2) screws that hold the burner tray in place (pointed out in Figure 17). Pick up the burner tray at the front (see Figure 18) then pull it out of the firebox.
4. Using a T-20 screwdriver remove the six (6) screws that hold the valve cover in place (pointed out in Figure 19). Pick the valve cover up then out of the firebox (see Figure 20).

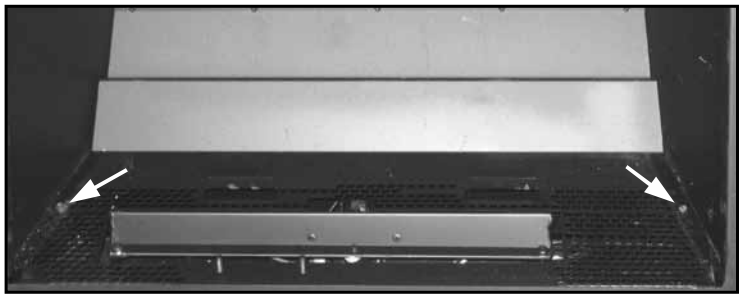

Figure 17: Screws Holding Burner Tray in Place.



Figure 18: Removing Burner Tray.

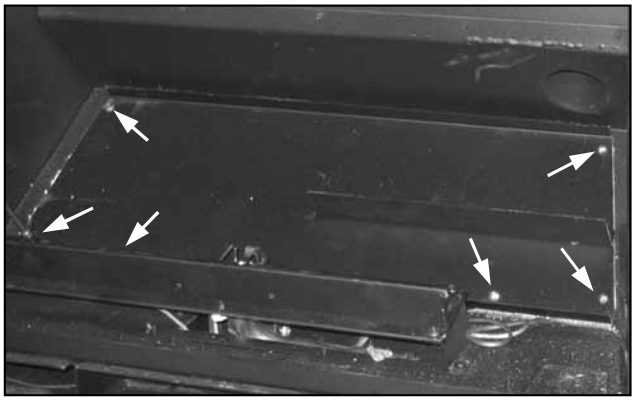

Figure 19: Screws Holding Valve Cover in Place.

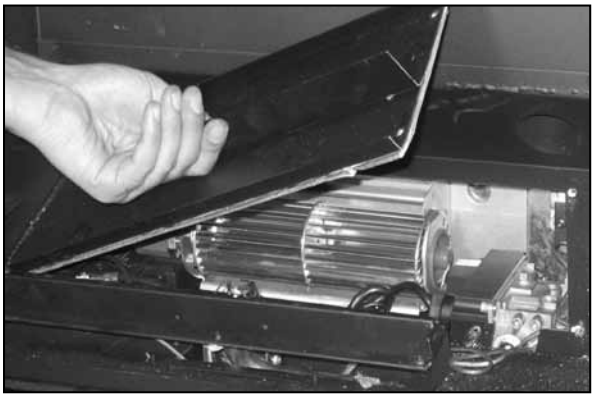

Figure 20: Removing Valve Cover.

Fuel Conversion:

TO BE INSTALLED BY A QUALIFIED SERVICE AGENCY ONLY

Please read and understand these instructions before installing.

Warning: This conversion kit shall be installed by a qualified service agency in accordance with the manufacturer's instructions and all applicable codes and requirements of the authority having jurisdiction. If the information in these instructions is not followed exactly, a fire, explosion or production of carbon monoxide may result causing property damage, personal injury or loss of life. The qualified service agency is responsible for the proper installation of this kit. The installation is not proper or complete until the operation of the converted appliance is checked as specified in the manufacturer's instructions supplied with the kit.

Maintenance And Service

Kit Parts List:

1 - Orifice (Natural Gas #42 DMS or Propane #54 DMS)
1 - Conversion label
1 - Installation instruction sheet

Carefully inspect the orifice supplied with this conversion kit. If it has been damaged or is missing, contact your dealer, distributor or courier company to have them replaced before starting this installation.

Conversion Kit Installation:

1. Shut the gas supply off at the shut-off valve upstream of the unit. CAUTION: The gas supply must be shut off prior to disconnecting the electrical power and before proceeding with the conversion. Allow the valve and unit to cool down to room temperature.
2. Remove the glass door as shown in the Maintenance and Service - Glass Door Removal.
3. Carefully remove the log set and ember material if they are installed.
4. Using a T-20 screwdriver, remove the four (4) screws that hold the burner in place (pointed out in Figure 21). Slide the burner to the left (see Figure 22), then up and out of the firebox.
5. Convert the burner orifice:
   a) Remove the main burner orifice with a ½ inch deep socket (see Figure 23).
   b) Put a bead of pipe-thread sealant or approved Teflon tape on the orifice threads before installing into the brass elbow.
   c) Install the new orifice from the kit into the brass elbow (see Figure 24).
6. Convert the pilot:
   a) Open the front of the pilot shield.
   b) Using a $^{7}/_{16}$" wrench, turn the pilot head a ¼ turn counter-clockwise (shown in Figure 25).
   c) Push the slider, with your finger or flat head screwdriver, to the left if it is to be set for natural gas or to the right for propane, red on the slider will be visible (see Figure 26).

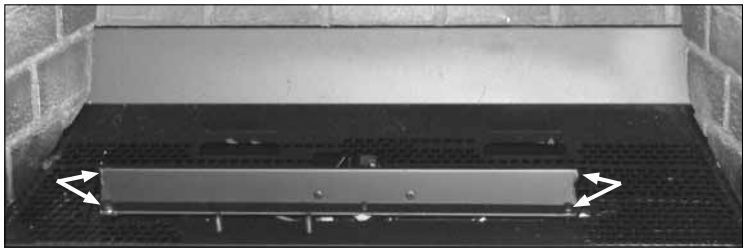

Figure 21: Unfastening Burner.

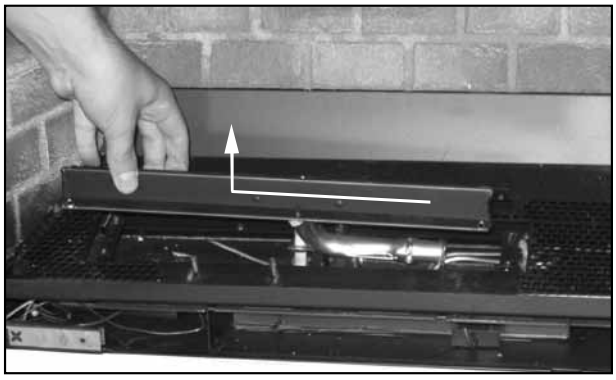

Figure 22: Burner Removal.

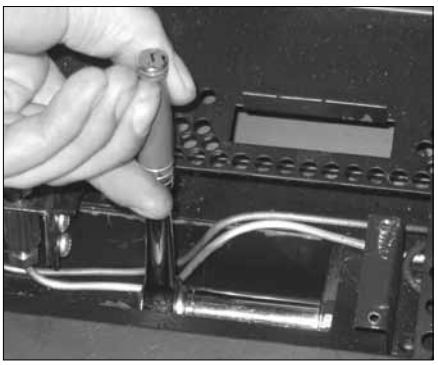

Figure 23: Orifice Removal.



Figure 24: Orifice Replacement.

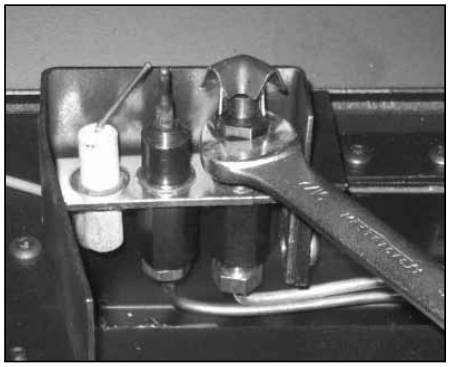

Figure 25: Turn Pilot Head.

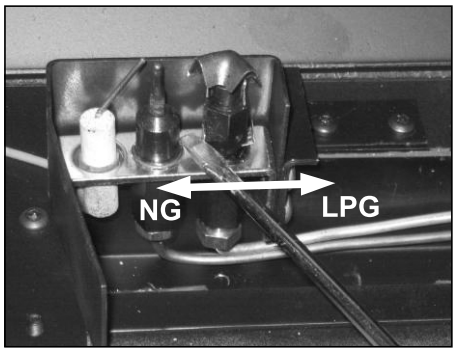

Figure 26: Setting Regulator gas type to LP.

d) Turn the pilot head a ¼ turn clockwise; back to its original position.
e) Close the front of the pilot shield.

7. Convert the gas regulator:
   a) If unit is installed, pull the Sonnet out from the fireplace. Ensure you do not damage any of the venting or the unit itself.
   b) Using a $^{7}/_{8}$" wrench, remove the brass nut at the back left of the unit (shown in Figure 27). A small black spring depressor is clipped into the back of the brass nut.



Figure 27: Remove Brass Cap.



Figure 28: Set Gas Type for Valve.

   c) Set the black spring depressor according to the gas used. The black spring depressor has two (2) teeth at each end that fit in to the brass nut but only one end has a larger disc. If the disc sits inside the cap then the valve is set for natural gas and if the disc is pointing out then the valve is set for propane (see Figure 28).
   d) Reinstall the spring depressor and brass nut onto the unit.
   e) Install the unit back into the fireplace. Check the venting and the unit itself are correctly installed.
8. Reinstall the burner (reversing the procedure in step 4), log set & embers (refer to Secondary Installation - Installing Log Set and Embers), and glass door. Note: When installing the burner, the venturi shutter rod should slip into the venturi shutter adjustment hole.
   Warning: Never run the unit without the glass door installed.
9. Open the shut-off valve at the gas line to the unit.
10. Use a small brush to apply a warm soapy water solution to all gas connections (use half dish soap and half warm water). If a gas leak is present, bubbling will occur. Gas leaks can be repaired by using an approved pipe thread sealant or approved Teflon tape. NEVER USE AN OPEN FLAME WHEN TESTING FOR LEAKS. Check the gas pressure of the appliance, refer to Initial Installation - Gas Line Connection and Table 6.
11. Reconnect the electrical power to the unit.
12. Light the pilot and check for proper flames (see Figure 9). Light the burner in both the "HI" and "LO" positions to verify proper burner ignition and operation and proper flame appearance. The amount of air to the venturi may need to be adjusted using the rod under the firebox. Pull the rod forward for more air or push it in for less air (see Figure 8). Also refer to Figure 79 for a flame appearance picture.
13. MAKE SURE that the conversion label is installed on or close to the rating label to signify that the unit has been converted to a different fuel type.

Initial Installation

WARNING: Operation of this heater when not connected to a properly installed and maintained venting system can result in carbon monoxide (CO) poisoning and possible death.

Clearances to Combustibles:

Maintain sufficient clearances for operation, service and maintenance.

- A clearance of 7½" (191 mm) minimum is required from the side of the unit to the sidewalls.
- A clearance of 4½" (114 mm) minimum is required from the side of the unit to a 6" (152 mm) deep post/column.
- Minimum clearance for any ¾" combustible facing is 37½" (953mm) from the bottom of the unit.
- A 3 ½" (89 mm) wide mantel can be mounted at a minimum height of 37½" (953 mm) from the bottom of unit.
- A 10" (254 mm) wide mantel can be mounted at a minimum height of 38 ¼" (972 mm) from the bottom of unit.
- A 12" (305 mm) wide mantel can be mounted at a minimum height of 39 ¾" (1010 mm) from the bottom of unit.
- A non-combustible material must be installed under the unit.
- If installed at floor level, a minimum 13" (330 mm) non-combustible material must be installed in front of the unit.

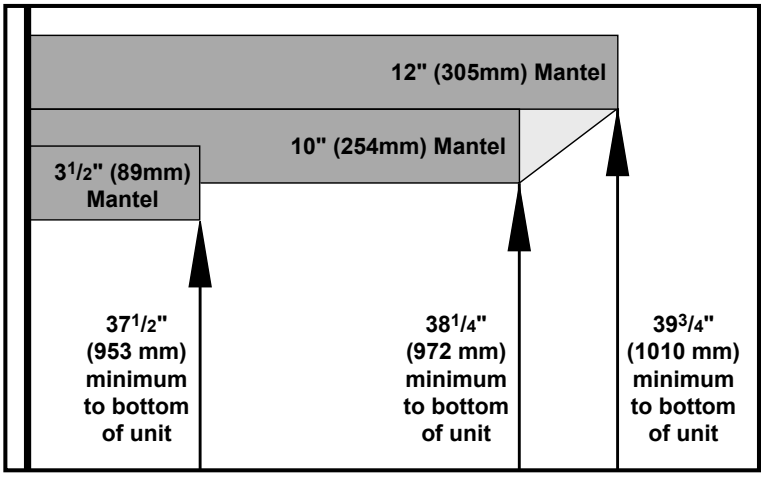

Figure 29: Mantle width and height.

Minimum Fireplace Size:

Table 4: Minimum dimensions of fireplace for Sonnet to be installed into.

	Width At Front	Width At Back	Height	Depth
Fireplace Dimensions	24 ¼" (616 mm)	18 ⅛" (460 mm)	17 3/16" (436 mm)	14" (355 mm)

Direct Vent Model:

WARNING: This appliance has been designed to draw room air for proper heat circulation from the sides and bottom of the unit, and out the top front. Blocking or modifying these openings in any way can create hazardous situations.

The vent height for the Sonnet must be between 10ft (3.05) and 35ft (10.67m).

This model is vented with a 2" intake and a 3" exhaust aluminum or stainless steel flex vent leading into a co-linear to co-axial vent adaptor and using a vertical termination cap. The flue collars of this model will fit inside of a standard 2" or 3" vent and may be fastened directly to the vent. The exhaust vent is on the top of the flue connector. The air intake is on the angled back of the vent collar plate. The air intake can be increased to a standard 3" size using Adaptor (50-1499 - 2" to 3" Air Intake) included with this unit.

Check periodically that the vents are unrestricted. Also ensure that all direct vent pipes have been properly sealed and installed after routine inspection or cleaning. The air intake and exhaust pipes must be installed in the correct locations on the back of the Sonnet.

Initial Installation

QUALIFIED INSTALLERS ONLY

B-Vent Model:

WARNING: This appliance has been designed to operate by drawing combustion air and dilution air from the room. It is also designed to draw room air for proper heat circulation from the sides of the unit. Blocking or modifying these openings in any way can create hazardous situations, either through poor venting or by overheating. It is important that this unit has sufficient air circulation for proper venting and combustion. Provisions must be made for the supply of adequate combustion and ventilation air. These openings must not be blocked. The appliance must not be connected to a chimney flue servicing a separate solid fuel-burning appliance.

A vent connector of Type B vent material must be installed with a minimum clearance of 1" (25mm) to combustible material, including passage through either a combustible wall or partition and must be securely assembled in accordance with the manufacturer's certified instructions.

A vent connector must be install with neither dips nor sags and must be securely supported by non-combustible hangers suitable for the weight and design of the materials employed. A slip joint in the horizontal section of a vent connector must be secured with either sheet metal screws, or other approved means to prevent sagging.

Automatic Flue Gas Spill Switch - B-Vent Model Only:

NOTE: This heater must be properly connected to a venting system. This heater is equipped with a vent safety shutoff system designed to protect against improper venting of combustion products. This safety switch is located on the rear of the appliance. If the switch trips more than once, the venting should be inspected by a qualified service technician for possible blockage or severe down draft conditions.

The draft hood must be in the same pressure zone as the air inlet. Inspect for draft from the front of the unit at the ¼" tube (shown in Figure 30). Note that when the door is installed the tube is not visible when looking straight at the unit. Check for a draft using smoke; a vacuum or suction into the tube will indicate proper drafting. If air is blowing out of the tube the problem must be corrected before the unit can be started.

This model can be vented with 3" aluminum or stainless steel flex vent and/or certified Type B Gas Vent. The flue collar of the appliance will fit inside of a standard 3" vent and may be fastened directly to the vent. Check periodically that the vent is unrestricted and an adequate draft is present when the unit is in operation.

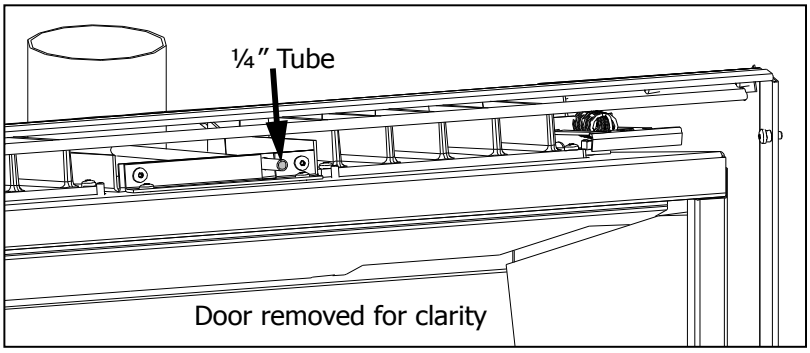

Figure 30: Draft check.

Preparing Your Sonnet For Installation:

- Remove the packaging from the appliance and surround panels; check to make sure there is no damage. Carefully check the glass door. Do not use the unit if it is damaged. In the event damage is found, please report it to both the courier and your dealer as soon as possible.

Initial Installation

QUALIFIED INSTALLERS ONLY

- Carefully clean the fireplace and flue before installing the stove. Failure to do so may result in fumes or dirt being blown into the room and may cause a fire leading to death or serious injury.
- If one or more Sonnets are to be installed, confirm that the remote control signal codes are different for each unit, refer to Maintenance and Service - Changing Remote Handset Code.

1. Remove the unit from the box and remove all packaging material from the appliance.
2. Remove door. See Maintenance and Service - Glass Door Removal.
3. Remove log and ember set and all wrapping material from the stove. Remove wrapping material from log and embers and check for any damage. If damage is observed, do not use unit and contact your local dealer.
4. Refractory, glass doors, screen rails, screen mesh and log grates can be removed from the fireplace before installing the Sonnet. Check that the chimney clean outs fit properly. The flue damper can be fully blocked open or removed for installation of the Sonnet; the smoke shelves, shields and baffles may be removed if attached by mechanical fasteners. **IMPORTANT:** Cutting any sheet-metal parts of a fireplace, in which the gas fireplace insert is to be installed, is prohibited.
5. If the fireplace opening is lower than 19" (483mm), remove the vent collar plate from the top of the insert by unscrewing the two (2) T-20 Torx screws located on the center top of the stove. Slide the collar plate backwards. Properly secure the vent collar plate to the flexible vent pipe liner(s) previously installed in the chimney. Be careful not to over-stretch the liner(s).
6. Place the unit part way into the fireplace. Connect the household gas line into the ⅜" NPT receptacle at the lower right rear of the unit using locally approved methods. Place the electric cable so it can be connected to the power supply.
7. As you push the unit into its final position in the fireplace, if the vent collar plate was removed, reinstall it to the stove by sliding it along the draft hood and secure with the screws previously removed.
8. Using a ¼" hex driver, adjust the levelling legs to ensure the unit is level and high enough if a base shelf and/or riser is to be installed. There are two (2) levelling legs on each side (shown in Figure 31).

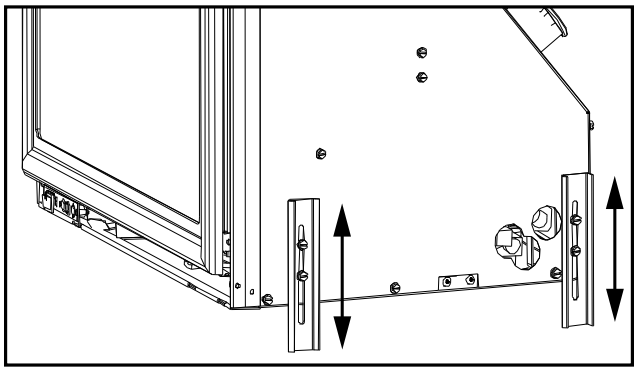

Figure 31: Levelling legs position.

Converting A Direct Vent Fireplace To A B-Vent Fireplace:

Kit Contents:

Quantity	Description
1	Air Intake Plug
1	Spill Switch with Wires & Bracket

Please ensure that all components are supplied with this kit. If components are missing or have been damaged, contact your dealer, distributor or courier company before starting this installation.

B-Vent Kit Installation:

1. Install the air intake plug.
   a) Place high temperature silicone on the outer surface of the ridges of the air intake plug (see Figure 32).
   b) Slide the air intake plug into the air intake on the back of the unit.

QUALIFIED INSTALLERS ONLY

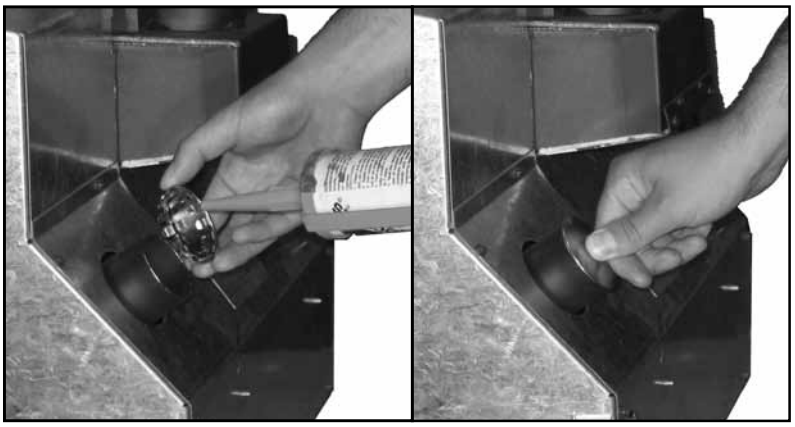

Figure 32: Install of Intake Air Plug.

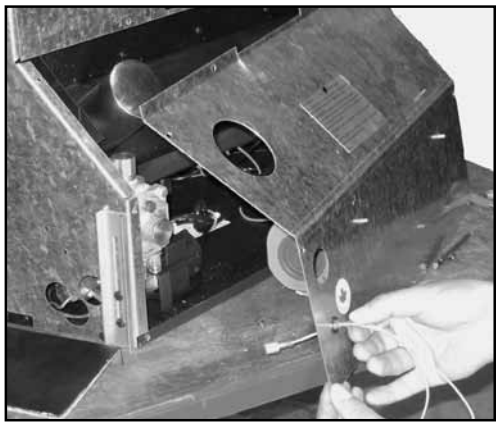

Figure 33: Spill Switch Wires Fed Through Back Panel.

2. Install spill switch assembly.
   a) Use a flat head screwdriver or ¼" socket to remove the nine (9) screws holding the back cover on (see Figure 46).
   b) Cut the tie strap from around the wires for the spill switch.
   c) Feed the connector end of both wires through the hole in the bottom left corner of the back panel (see Figure 33).
   d) Using needle nose pliers remove the Thermocouple Cable #1 (connector closer to the rear of the unit) from the Thermocouple (see Figure 34 & 45).
   e) Attach the female spill switch connector to the thermocouple and the male spill switch connector to the Thermocouple Cable #1 (see Figure 35 & 45).

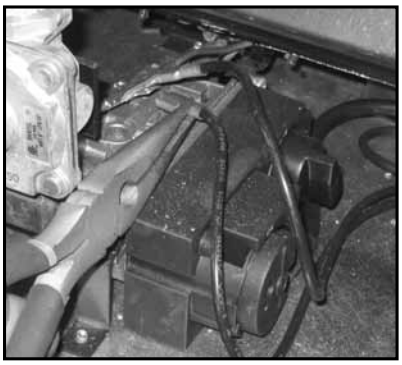

Figure 34: Remove Jumper From Thermocouple.



Figure 35: Spill Switch Wires Connect to Thermocouple.

   f) Re-attach the back panel.
   g) Using a T-20 screwdriver remove the four (4) screws that hold the flue slider bottom plate. Pull the plate down then out, ensuring that the gasket comes with the plate (see Figure 36).
   h) Install spill switch bracket with two (2) of the screws removed in the previous step. The spill switch must be angled under the opening (see Figure 37)

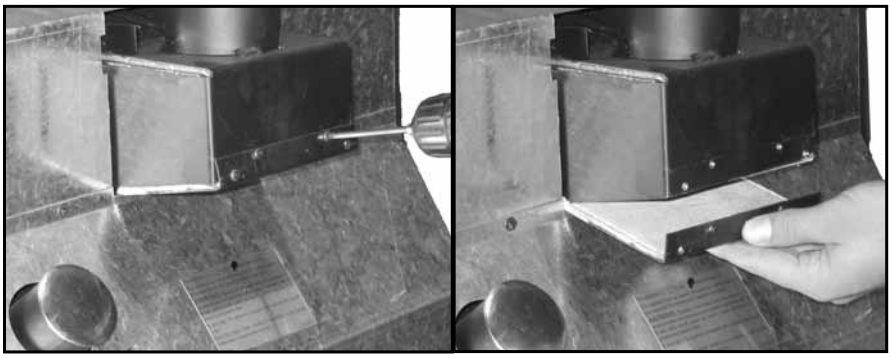

Figure 36: Remove Flue Slider Plate & Gasket.

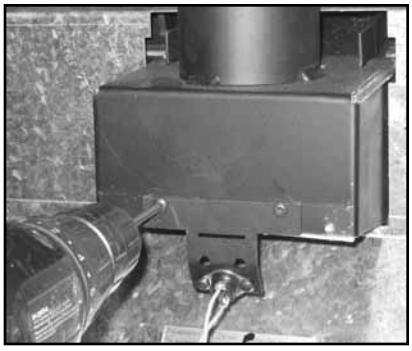

Figure 37: Install Spill Switch on Bracket.

3. Remove screw from draft tube and remove air intake covers.
   a) Remove the glass door as shown in the Maintenance And Service - Glass Door Removal.
   b) Using a T-20 screwdriver remove the screw that is in the draft tube pointed at in Figure 30.
   c) Remove the two (2) air intake covers below the firebox (refer to Figure 38), they can be pried out using a flat head screwdriver.
   d) Install door.
4. Test fire the appliance and ensure proper operation. A venturi adjustment (Figure 8) could be required to achieve an efficient flame, refer to Figure 79. Improper operation or adjustment could result in Carbon Monoxide production causing personal injury or property damage.

Note: To convert a B-Vent to a Direct Vent, remove the air intake plug, remove the spill switch assembly and re-install the flue slider bottom plate, re-install the jumper onto the thermocouple wire, re-install the air intake cover plates, install the proper venting, re-install the screw into the draft tube at the front top of the unit.

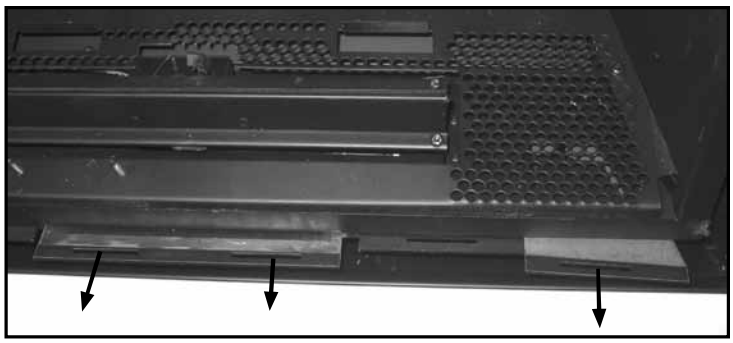

Figure 38: Air Intake Cover Plates.

Venting Fireplace Inserts:

The **ENVIRO** Sonnet may be installed and vented into any solid fuel fireplace that has been installed in accordance with the National, Provincial/State and local building codes and has been constructed of non-combustible materials. Before starting, refer to Initial Installation - Preparing Your Sonnet For Installation and Initial Installation - Converting A Direct Vent Fireplace To A B-vent Fireplace. Please reference the information in Table 5 and Figures 39, 40, and 43.

An approved chimney liner and rain cap must be used. A throat connector or flashing **must** be installed to ensure a tight seal, top performance, safety and efficiency. Carefully follow the manufacturer's instructions that accompany the chimney liner kit. Use listed B-Vent or Flexmaster double walled aluminum flex vent (3" flex convertion piece and 4"x 6 5/8" cap) from any of the following approved products; American Metal Products (Amerivent Direct), Security Chimneys (Secure Vent), Selkirk Metalbestos (Direct-Temp), Simpson Dura-Vent (Direct Vent GS), and (ICC Excel Direct). If necessary, remove the vent collar plate from the top of the insert and connect it securely to the liner with sheet metal screws and/or hose clamps.

Check for any tears in the liner at this point. IMPORTANT: The screws that hold the vent collar plate in its approved position must be installed.

Provide for proper and adequate venting and air supply for this appliance in accordance with the tables in the current National Fuel Gas Code, Z223.1/NFPA 54 or the CSA B149.1.

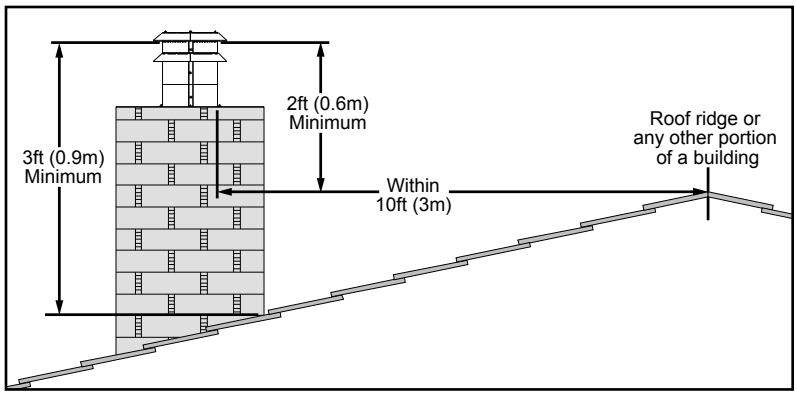

Figure 39: Roof Clearances.

Initial Installation

QUALIFIED INSTALLERS ONLY

NOTE: If the Sonnet unit is pulled out of its installation, and the vent air intake system is disconnected for any reason, ensure that the vent-air intake pipes are re-sealed with high-temperature sealant or silicone and reconnected with three (3) sheet metal screws evenly spaced.

Table 5: Vent termination clearances

Minimum Clearance	Description
3 ft (0.9 m)	Clearance above the highest point where it passes through a roof surface, refer to Figure 39.
24 in (0.6 m)	Clearance above a roof ridge, any other portion of a building, or any other obstruction within a horizontal distance of 10 feet (3 m), refer to Figure 39.
5 ft (1.5 m)	Clearance for a vent or chimney above either the highest connected appliance drafthood outlet, or flue collar.
6 ft (1.83 m)	Clearance to mechanical air supply inlet.
3ft (0.9m)	Clearance to each side of center line extended above meter/regulator assembly.
6 ft (1.83 m)	Radial clearance around service regulator vent outlet.
12 in (30 cm)	Clearance above grade, verandah, porch, deck, or balcony.
3 ft (0.9 m)	Clearance to a building opening or combustion air inlet of another appliance, except with the approval of the authority having jurisdiction for the following reduced clearances.
9 in (0.23 m)	Exception for inputs up to and including 50,000 Btu/h (15kW)
12 in (0.3 m)	Exception for inputs exceeding 50,000 Btu/h (15kW) but not exceeding 100,000 Btu/h (30kW)

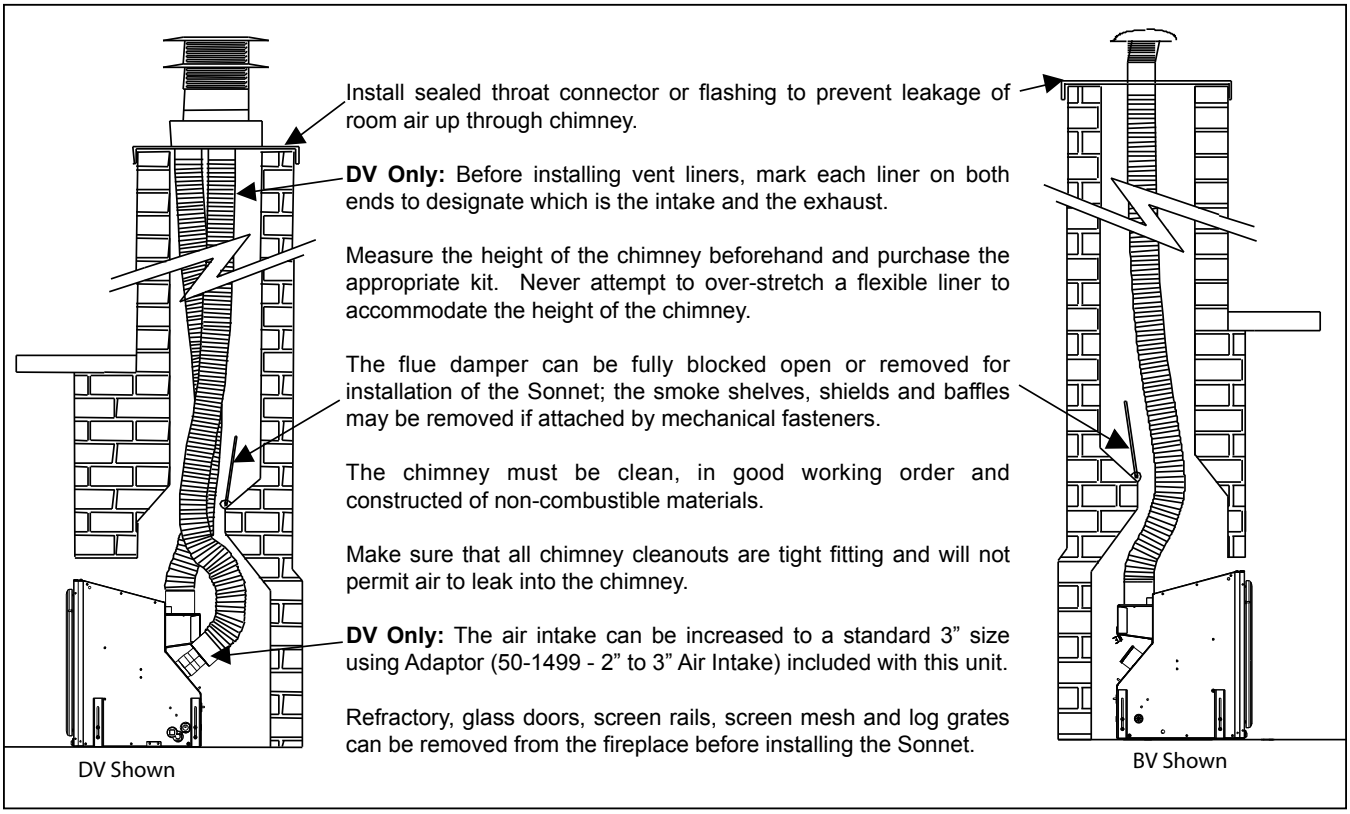

Figure 40: Installation of Sonnet DV and BV.

Initial Installation

QUALIFIED INSTALLERS ONLY

Direct Vent Vertical Vent Termination:

For use with Sonnet Direct Vent Fireplace Insert. The Vertical Vent Cap is termination, rain cap, and a throat connector, it will ensure a tight seal, top performance, safety and efficiency.

KIT COMPONENTS:

Quantity	Description	Quantity	Description
1	Vertical Direct Vent Termination Cap	1	4 oz Tube RTV Silicone
6	9/16" Tex Screws	1	4 oz Tube Mill-Pac Sealant

Please ensure that all components are supplied with this kit. If components are missing or have been damaged, contact your dealer, distributor, or courier company. Do not attempt the installation if components are missing or damaged.

INSTALLATION INSTRUCTIONS:

1. Plan your installation and clearances to combustibles. The Sonnet may be installed and vented into any solid fuel fireplace that has been installed in accordance with the National, Provincial/State and local building codes and has been constructed of non-combustible materials. Also refer to the Initial Installation - Preparing Your Sonnet For Installation and Clearances to Combustibles sections. Refer to Figure 43 throughout installation.
2. Stretch both the Ø3" (76mm) flex vent and the Ø2" (51mm) flex intake liner to the length needed to ensure the flex can be easily connected to the vent terminal.
3. Install the flex pipe assembly up through the chimney, ensure that the pipe slides through far enough to connect onto the Vertical Vent Cap.

   Note: For any chimney over 15' (4.6m), install the Sonnet 15' 2" & 3" Flex Vent (part #50-1512) and the Sonnet 2" & 3" Flex Couplers (part #50-1513). Place a bead of sealant on the coupler (Mill-Pac Black sealant for the Ø3" (76mm) and high temperature silicone for the Ø2" (51mm)) Slide the meeting ends of the flex over the coupler and fasten each joint in place with three (3) sheet metal screws through the flex and into the coupler.
4. The Vertical Vent Cap can be installed onto chimneys with flue openings up to 16" (406mm) x 16" (406mm) and the actual flashing is 18"x18" (refer to Figure 41). If the chimney is smaller the cap should be trimmed down and folded over.
5. Apply a bead of Mill-Pac Black sealant to the top section of the Ø3" (76mm) vent collar plate. Slide the Ø3" (76mm) flex vent over the flue collar and secure with three (3) sheet metal screws evenly spaced.

   Note: If the fireplace opening is lower than 19" (483mm), remove the vent collar plate from the top of the insert and connect it securely to the liner as stated in Step 4. Check for tears in the liner at this point.

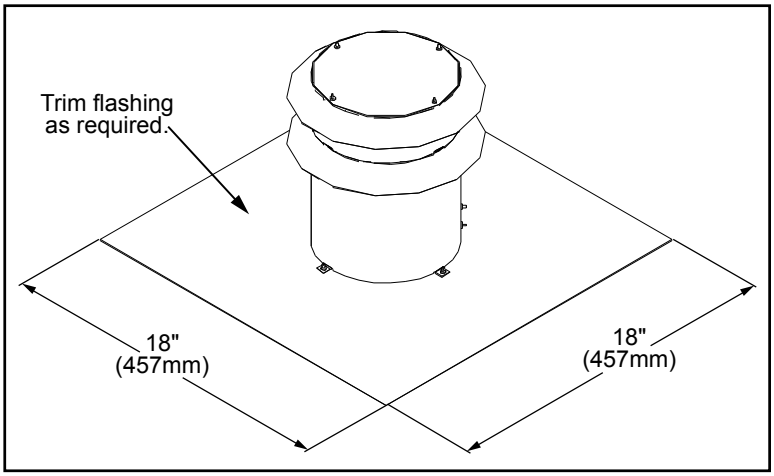

Figure 41: Vertical Vent Cap Dimensions.

QUALIFIED INSTALLERS ONLY

6. Place a bead of high temperature silicone on the intake collar of the fireplace, slide the Ø2" (51mm) flex intake liner over the collar, secure the flex liner with three (3) sheet metal screws evenly spaced.
7. At the top of the chimney, apply a bead of Mill-Pac Black sealant to the Ø3" (76mm) pipe of the vent terminal (refer to Figure 42). Slide the flex liner onto the vent terminal and secure with three (3) sheet metal screws evenly spaced.
8. Place a bead of high temperature silicone on the intake collar of the vent terminal (refer to Figure 42). Slide the Ø2" (51mm) flex intake liner over the collar, secure the flex liner with three (3) sheet metal screws evenly spaced.
9. Make a tight connection between the gas fireplace insert flue collar and the fireplace chimney at the top of the chimney. Secure the vent terminal to the chimney using adequate sealant, and according to local building codes.
10. Light the Sonnet and ensure proper operation and proper flame appearance. The amount of air to the venturi may need to be adjusted using the rod under the firebox (see Figure 8). Also refer to Figure 79 for a flame appearance picture.

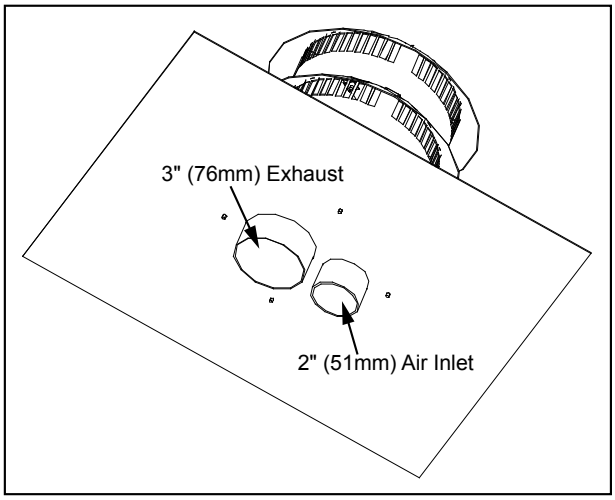

Figure 42: Vertical Vent Cap Underside.

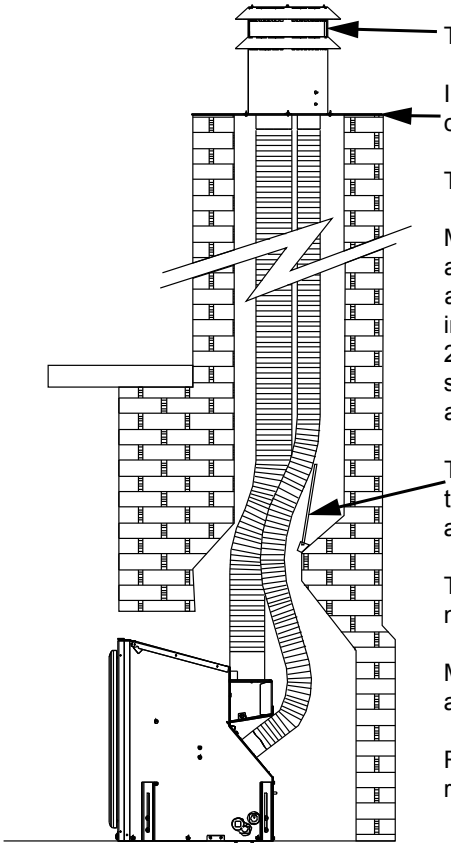

The height for the vent must be between 10ft (3.05m) and 35ft (10.67m).

Install sealed Vertical Vent Cap to prevent leakage of room air up through chimney.

The intake is 2" (51mm) and the exhaust is 3" (76mm).

Measure the height of the chimney beforehand and purchase the appropriate kit. Never attempt to over-stretch a flexible liner to accommodate the height of the chimney. Any chimney over 15' (4.6m), install the Sonnet 15' 2" & 3" Flex Vent (part #50-1512) and the Sonnet 2" & 3" Flex Couplers (part #50-1513). Every joint in the venting must be secured with three (3) #8 x 3/8" HWH sheet metal screws and an appropriate sealant (either silicone or milpac).

The flue damper can be fully blocked open or removed for installation of the Sonnet; the smoke shelves, shields and baffles may be removed if attached by mechanical fasteners.

The chimney must be clean, in good working order and constructed of non-combustible materials.

Make sure that all chimney cleanouts are tight fitting and will not permit air to leak into the chimney.

Refractory, glass doors, screen rails, screen mesh and log grates can be removed from the fireplace before installing the Sonnet.

Figure 43: Installation of Sonnet DV .

Initial Installation

QUALIFIED INSTALLERS ONLY

Electrical Requirements:

The fan will not operate if the appliance is cold. A few minutes after the appliance is lit and the fan is set to low or high, the fan will automatically turn on. The fan will automatically turn off after the appliance has cooled down.

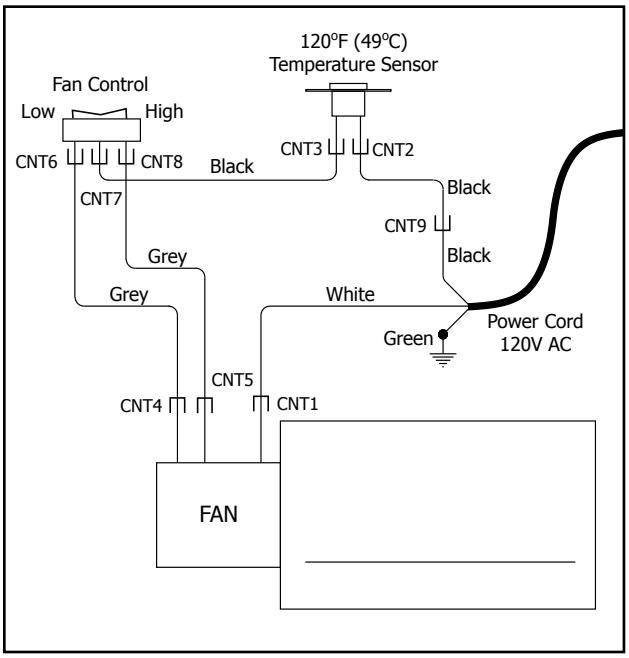

Figure 44: Fan wiring diagram.

The fireplace must be electrically connected and grounded in accordance with local codes or, in the absence of local codes, with the current CSA C22.1 Canadian Electrical Code Part 1, Safety Standards For Electrical Installations, or The National Electrical Code ANSI / NFPA 70 in the US.

WARNING: The electrical grounding instructions must be followed. The fan kit is equipped with a three-prong (grounding) plug for your protection against shock hazard, and should be plugged directly into a properly grounded three-prong outlet. DO NOT cut or remove the grounding prong from this plug.

CAUTION: When servicing controls, label all wires prior to disconnection. Wiring errors can cause improper and dangerous operation. Verify proper operation after servicing.

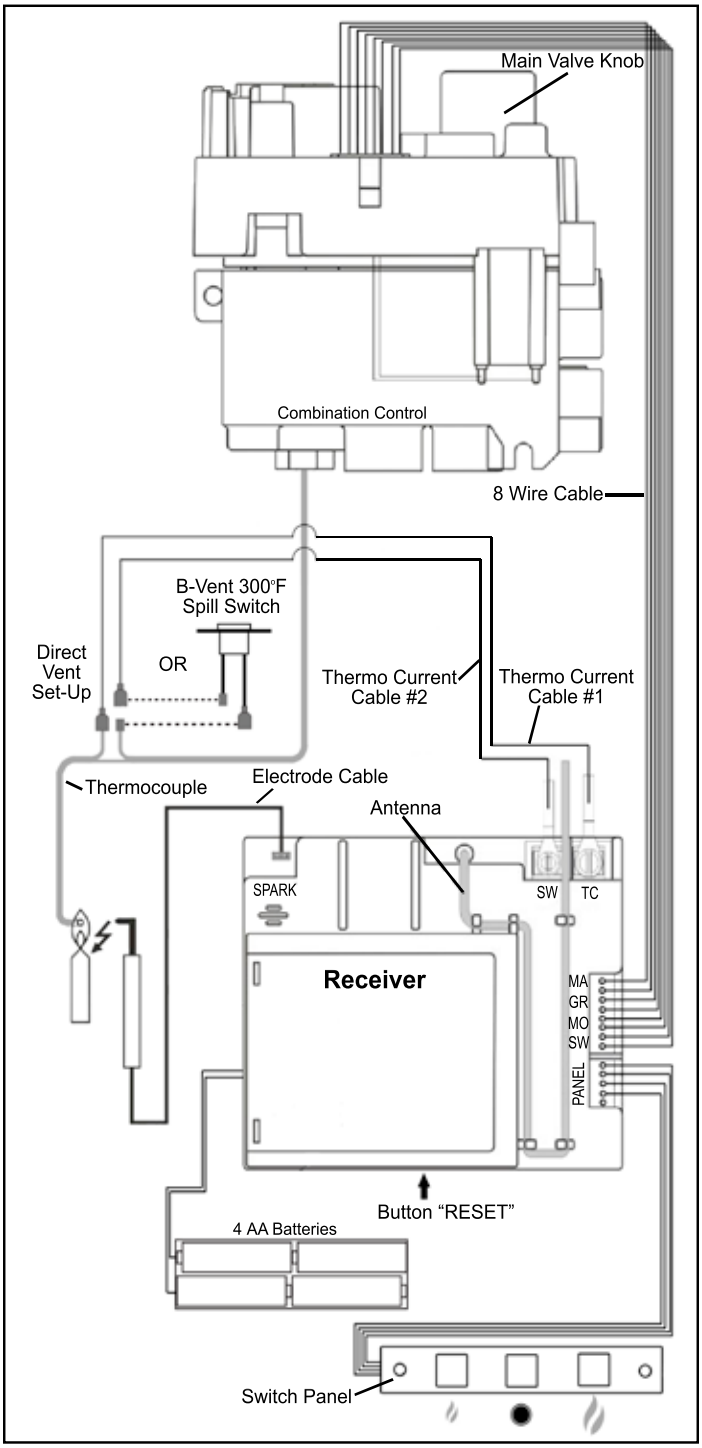

Figure 45: Wiring of a valve.

Initial Installation

QUALIFIED INSTALLERS ONLY

Optional Fan Kit:

Tools Required:

- ¼" Socket or Driver or Flat Head Screwdriver
- Utility Knife

Kit Contents:

Quantity	Description
1	Fan Kit Assembly (includes Back Cabinet Panel, Fan, Mounting Bracket, Power Cord,
1	Wiring Harness
1	Temperature Sensor
1	Fan Control; 3 Position Switch

Please ensure that all components are supplied with this kit. If components are missing or have been damaged, contact your dealer, distributor or courier company before starting this installation

Fan Kit Installation:

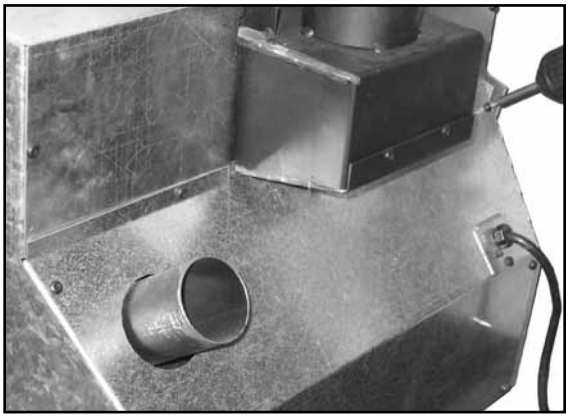

Figure 46: Removing/Installing Back Panel From Sonnet.

1. Use a flat head screwdriver, ¼" socket, or a Torx T-20 screwdriver to remove the nine (9) screws holding the old back panel on (see Figure 46). Discard old back panel.
2. Hold the new back panel with the fan assembly close to the left side of the unit (see Figure 47).
3. Ensure the wiring harness is assembled according to Figure 45 & 47 and is attached to the fan.
4. Slide the fan switch and temperature sensor part of the wiring harness under the left of the firebox to the front of the unit. There are a couple of metal tabs on the lower left side of the cabinet that the wiring can be hooked under.
5. Line up the new back panel with the screw holes in the back and install the screws for the back cover.
6. Pull the right end of the control panel forward; it will pivot out (see Figure 12).
7. Slide the temperature sensor into the holding tabs below the left end of the burner behind the control panel.
8. Using a utility knife cut out the rectangle on the control panel between the two (2) fan symbols.
9. Make note of the order the connectors are in on the three (3) position switch and remove them. Slide the switch through the front of the hole that was just cut out and reattach the connectors to the switch.
10. Close the control panel.

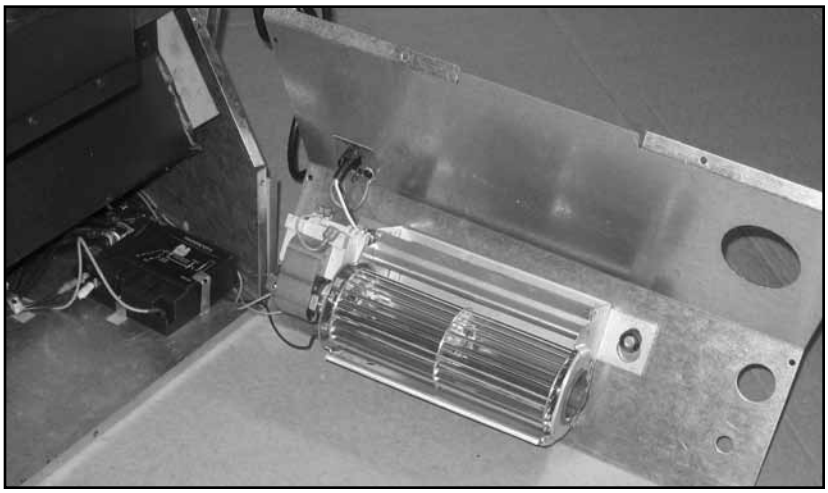

Figure 47: Installing Fan onto Back Panel.

QUALIFIED INSTALLERS ONLY

Fan Only Replacement:

1. Unplug the power or turn off the electrical breaker for the unit.
2. Follow steps 1-4 in Removing Valve Cover - Maintenance And Service.
3. The fan hangs on a grommet at either end of the mounting bracket (see Figure 47), lift the fan assembly up and off the grommets.
4. Slide the fan forward, mark the three (3) connectors on the fan motor so they can be reconnected correctly. Remove the female spade connectors from the motor. Pull the old fan out the valve cover opening.
5. Use a flat head screwdriver or ¼" socket to remove the four (4) screws on the back of the mounting bracket holding the old fan onto the bracket.
6. Install the mounting bracket onto the new fan.
7. Place the new fan into the valve cover opening and install the fan by reversing steps 1-4.

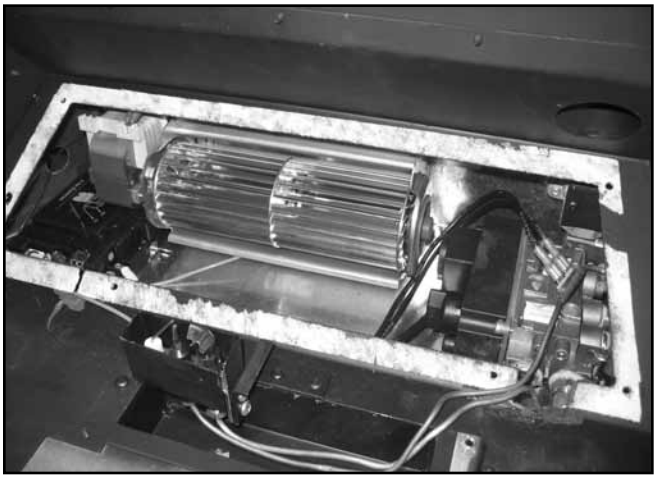

Figure 48: Fan in Position

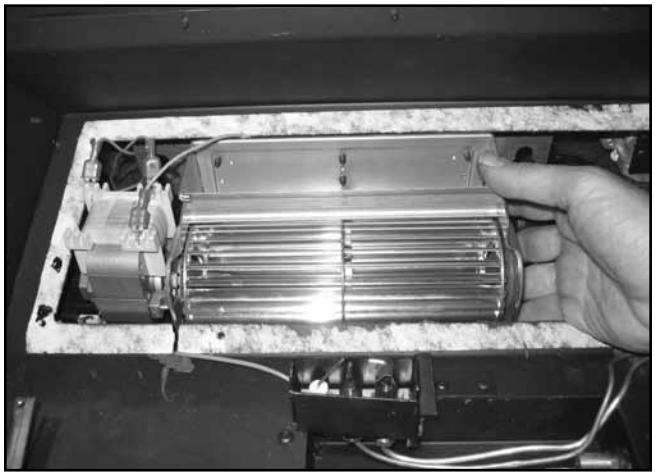

Figure 49: Removing the Fan.

Gas Line Connection:

Warning: Only persons licensed to work with gas piping may make the necessary gas connections to this appliance.

Gas Line Connection:

• A ⅜" NPT male pipe will have to be turned into the ⅜" NPT female elbow at the lower right side rear of this fireplace (see Figure 50). Consult the local authorities for local codes or use the CAN/CGA B149 (1 or 2) installation code in Canada. In the US, gas installations follow either local codes or the current edition of the National Fuel Gas Code ANSI Z223.1.

• The efficiency of this unit is a product thermal efficiency rating determined under continuous operating conditions and was determined independently of any installed system.

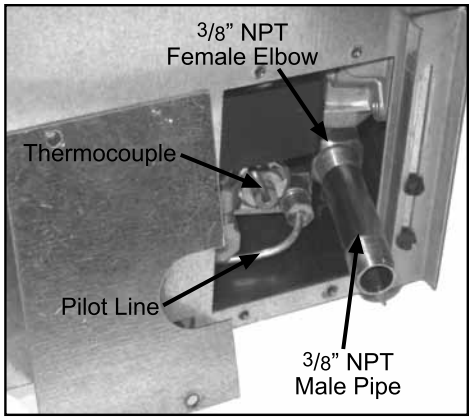

Figure 50: ⅜" NPT female elbow.

• If the factory-built fireplace has no gas access hole(s) provided, an access hole of 1.5 in (37.5mm) or less may be drilled through the lower sides or bottom of the firebox in a proper workmanship like manner. This access hole must be plugged with non-combustible insulation after the gas supply line has been installed."

Initial Installation

QUALIFIED INSTALLERS ONLY

• A shut-off valve is not supplied with this unit but one should be installed.

• The appliance and its shut-off valves must be disconnected from the gas supply piping system during any pressure testing where the pressure **exceeds** ½ psig (3.45 KPa) or the valve will be damaged.

• The unit must be isolated from the gas supply piping system by closing its individual manual shut off valve during any pressure testing of the gas supply piping system at pressures **equal to or less than** ½ psig (3.45 KPa).

Table 6: Orifice and Pressure Information.

Main Burner	Natural Gas	Propane Gas
Orifice:	#42 DMS	#54 DMS
Manifold Press:	4.0 W.C. (0.99 KPa)	10.0 W.C. (2.47 KPa)
Min. Manifold Press:	0.2 W.C. (0.05 KPa)	2.3 W.C. (0.57 KPa)
Max. Supply Press:	7.0 W.C. (1.74 KPa)	13.0 W.C. (3.28 KPa)
Min. Supply Press:	5.0 W.C. (1.24 KPa)	12.0 W.C. (2.96 KPa)
Max. Input:	26,600 BTU/hr (7.79 KW)	21,300 BTU/hr (6.24 KW)
Min. Input:	6,500 BTU/hr (1.9 KW)	11,400 BTU/hr (3.34 KW)

TO TEST VALVE PRESSURES:
The pressure taps are located on the front side of the valve (see Figure 51 & 52).

1. Follow steps 1-4 in Removing Valve Cover - Maintenance And Service. to access the valve.
2. Turn set screw one (1) turn counter-clockwise to loosen.
3. Place $^{5}/_{16}$ in (8 mm) I.D. hose over the pressure taps.
4. Check pressures using a manometer.
5. When finished, release pressure, remove hose and tighten set screw.
6. Re-install the valve cover, burner tray, brick panels (refer to Secondary Installation - Installing the Brick Panels), log set and ember material (refer to Secondary Installation - Log Set and Ember Installation) and the glass door.

Always check for gas leaks with a soap and water solution after completing the required pressure test.

NEVER USE AN OPEN FLAME FOR LEAK TESTING.

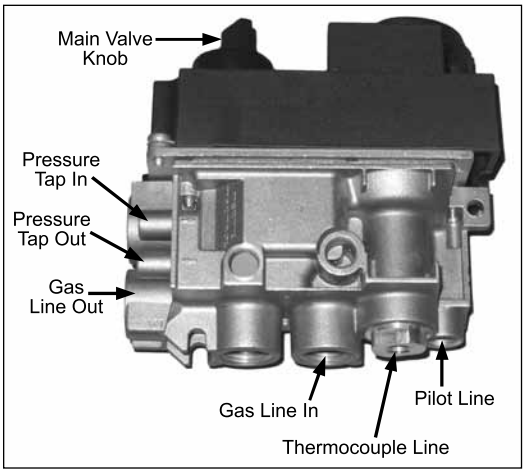

Figure 51: Labeled Gas Valve.

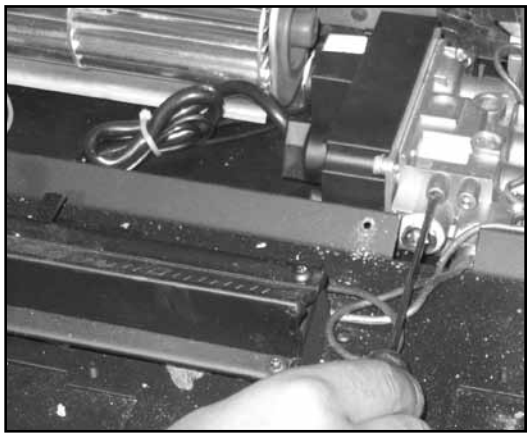

Figure 52: Opening Inlet Pressure Tap on Valve.

Initial Installation

QUALIFIED INSTALLERS ONLY

Adjusting The Pilot Flame:

The pilot flow adjustment is pre-set to maximum at the factory and should not need to be adjusted. The pilot flame should envelope ⅜" to ½" (10 to 13mm) of the thermocouple (see Figure 53). However, should the need arise, follow Steps 1- below.

1. Follow steps 1-4 in Removing Valve Cover - Maintenance And Service.
2. If a fan is installed; unhook the three (3) connectors to the fan motor, lift the fan up and off the grommets, and slide the fan forward then up and out of the unit.
3. The adjustment screw can be reached through the ⅛" (3mm) hole in the MAN-knob pointed out in Figure 54. The MAN-knob must be in the ON position.
4. Pierce through the film on the cover with a screw driver to reach the adjustment screw beneath.
5. Turn the adjustment screw clockwise to decrease or counterclockwise to increase pilot flame.

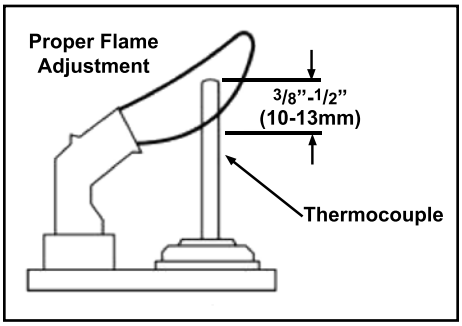

Figure 53: Proper Pilot Flame.

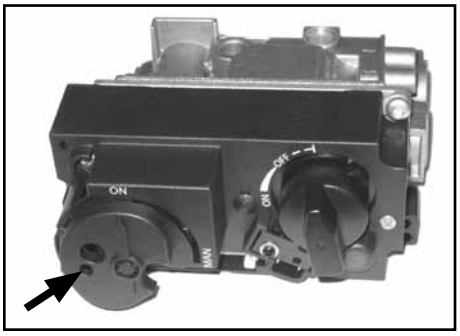

Figure 54: Screw for Adjusting Pilot Flame.

Remote Handset Wall Bracket Installation:

Kit Contents:

Quantity	Description
1	Wall Bracket (Top & Bottom)
1	Spacer
1	Countersink Head Screw
2	Pan Head Screw
2	Spacer

IMPORTANT: The remote handset wall bracket must be installed in the same room as the Sonnet.

Installation Options:

1. Mounted to wall with bottom of bracket only; refer to Figure 55.
2. Mounted to wall with top and bottom of bracket; refer to Figure 56 (most common).
3. Mounted to wall and bottom of light switch cover with top and bottom of mount; refer to Figure 57.

Note: The spacer maybe found between the top and bottom halves of the wall bracket.

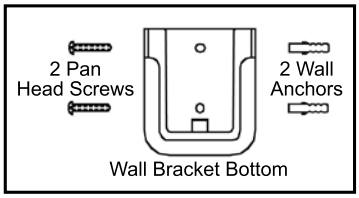

55: Wall Bracket Installation Option 1.

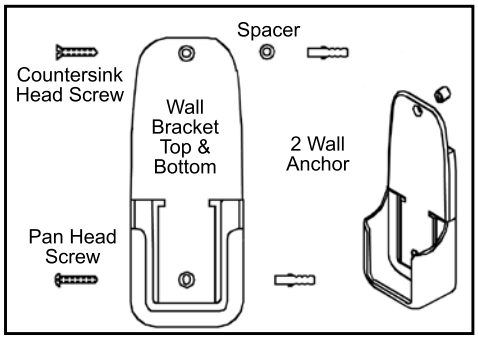

Figure 56: Wall Bracket Installation Option 2.

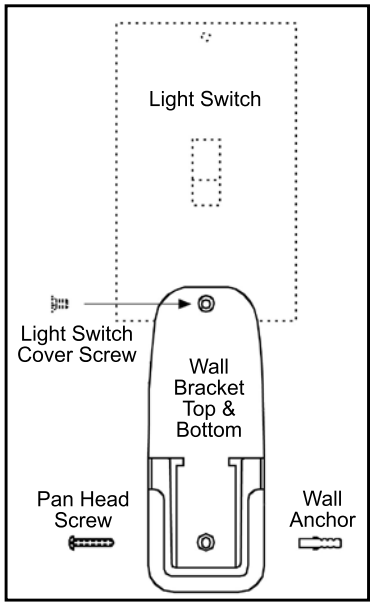

Figure 57: Wall Bracket Installation Option 3.

Secondary Installation

Optional Base Shelf & Riser:

The Sonnet Base Shelf (1⅝" (41 mm) high) and Base Shelf Riser (2⅛" (54 mm) high) are black powder coated components that can be combined to create a riser with an overall height of 2 3/16" (55 mm). This shelf can be installed with or without the riser and can be used when the hearth in front of the unit is lower than the fireplace opening. Additional Base Shelf Risers can be fastened together to increase the height in increments of 2⅛" (54 mm). This Base Shelf may be used in conjunction with the Sonnet Colonial & Classic surrounds with or without the Adjustable Surround, and it may also be used with the Sonnet Trimmable Surround. The Base Shelf and Riser are sold separately.

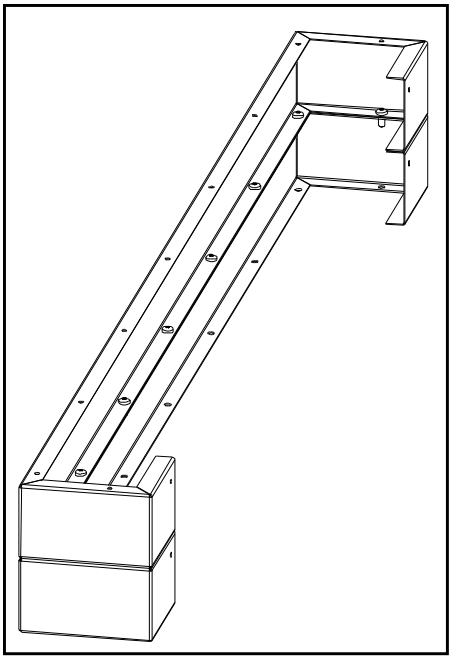

Figure 58: Combining 2 Base Shelf Riser.

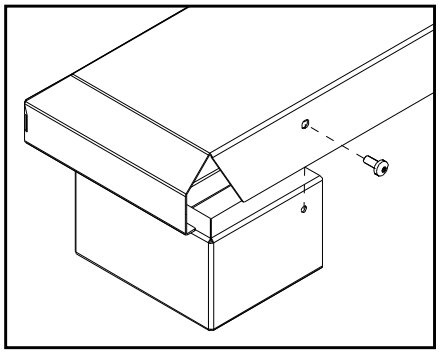

Figure 59: Installing Base Shelf onto Riser.

Installation:

1. If unit is running, turn it off and allow it to cool completely.
2. When using more than one riser each level must be attached using nine (9) #8 T-20 screws provided (see Figure 58).
3. If installing with riser(s) the Base Shelf is to be fastened to the riser(s) with one T-20 screw at each end of the back (see Figure 59).
4. The leveling legs on the Sonnet may need to be adjusted to match the height of the riser and shelf. Each leveling leg has two (2) screws that can be loosened using a ¼" hex driver (see Figure 31). Adjust the leg to the required height and then retighten the screws.
5. Center the Base Shelf assembly in front of the unit flush with the bottom of the unit.
6. Install surround if required.

Installation of Adjustable Surround And Trim:

Warning: The surround becomes hot when the unit is operating; ensure that the unit is turned off, and that it has cooled to room temperature.

Kit Contents:

Colonial or Classic Trim	
Quantity	**Description**
1	Trim Set (top, left, right, & bottom)
2	Hook Bracket (1 left & 1 right)
4	#8 Screw T-20
4 for 3 sided 8 for 4 sided	Corner Bracket

Adjustable Surround	
Quantity	**Description**
2	Surround Corner - Large
2	Surround Corner - Small
16	#8 Screw T-20
4	Mounting Bracket
4	Mounting Bracket Back
1	Keystone & Cover Set

Please ensure that all components are supplied with this kit. If components are missing or have been damaged, contact your dealer, distributor or courier company before starting this installation.

Secondary Installation

Note: The Adjustable Surround can only be installed onto the Colonial or Classic Surrounds, it is not intended to be installed on its own with the Sonnet unit.

ASSEMBLY:

1. Line up the two (2) screw holes in the left hook bracket with the second slot in on the back of the left trim side (refer to Figure 60). Center the bracket between the top and bottom of the trim (approximately ⅛" (2.5mm) from either end) and fasten the bracket in place using two (2) #8 screws.
2. Install the right hook bracket onto the right trim side using the same method used in Step 1.
3. Only if installing Adjustable Surround with dimensions within the ranges in Table 1: Slide one mounting bracket back into the inner wide slot, shown in Figure 53, of the left and right trim sides and slide two (2) into the top trim.

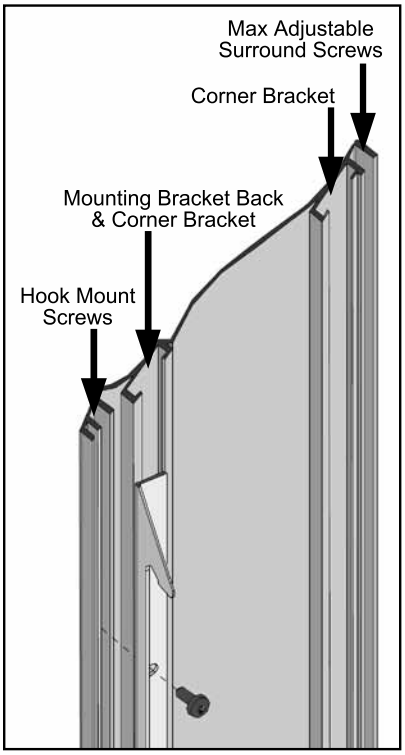

Figure 60: Screw Hook Bracket to the Trim.

4. Attach the left side trim to the top trim using two (2) corner brackets (see Figure 60 & 61) to secure pieces together. There are two (2) main pieces to each corner bracket (see Figure 62). When installing the corner pieces into the trim the "B FACE" sides must face each other and the screw heads are to face out. With the bracket in place and the top and a side trim snug together use a flat head screwdriver to turn the two (2) screws in each corner bracket to tighten them into the side trim first, then the top trim.
5. Attach the right side trim to the top trim using the same method used in Step 4.
6. For 4-Sided Trim Only: Slide two (2) corner brackets into place at either end of the bottom trim and attach the bottom trim to the left and right trim using the same method used in Step 4, except tightening the side trim first, then the bottom trim.
7. Ensure that the complete trim is square; if it is not, loosen the corners, adjust the trim, and re-tighten the corners.
8. Only if installing Adjustable Surround with maximum dimensions from Table 1; fasten the two (2) adjustable surround corners to the outside rim of the Trim (pointed out in Figure 60) with four (4) T-20 screws for each surround corner.

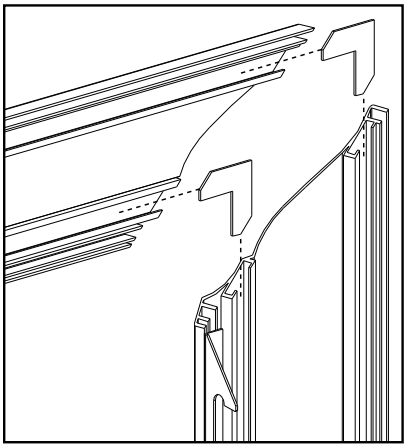

Figure 61: Corner brackets being Installed into Trim.

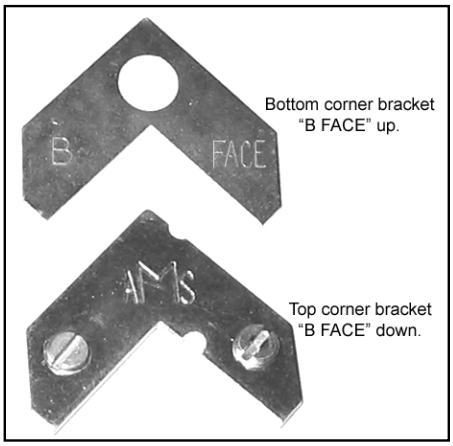

Figure 62: Two pieces of corner bracket.

9. Only if installing Adjustable Surround with dimensions within the ranges in Table 1 steps 9-12: On the back side of the trim, mark out the offset distances required for the adjustable surround corners to create the required size. Marking the trim will help you install the surround corners so they will be even and square. Refer to Figure 63 and Table 7.

   a) Decide how big an area the adjustable surround will need

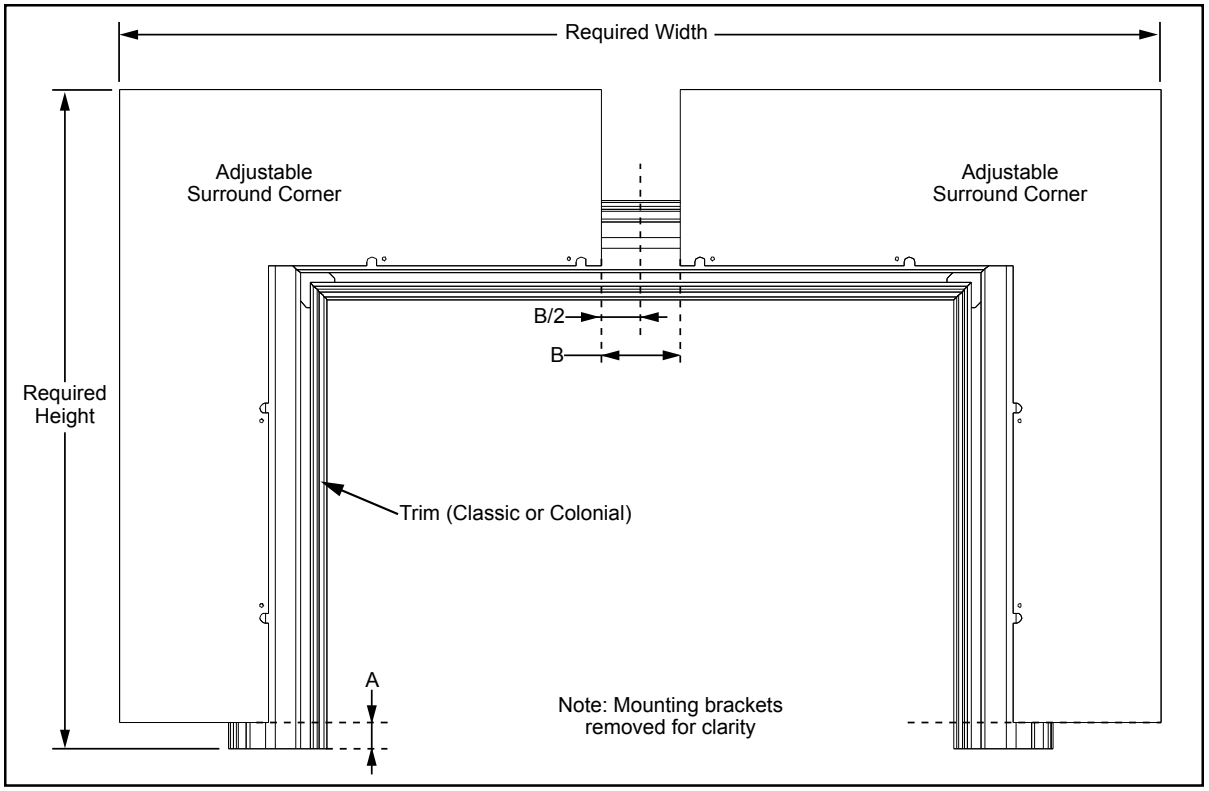

Figure 63: Marking offsets on Trim, Relates to Table 7.

to cover. From this decide which size of the adjustable surround will meet your need. Refer to Table 1 for the Adjustable Surround ranges. In the Table 7 example, we want to cover an area of 25" (635mm) x 39¼" (997mm); this falls into the large adjustable surround range.

Table 7: Adjustable Surround Example, Relates to Figure 61.

	Height	Width
Area Needed to Cover	25" (635mm)	39¼" (997mm)
Minimum size of Large Adjustable Surround	24" (609mm)	36¼" (921mm)
Difference	1" (26mm) = A	3" (76mm) = B

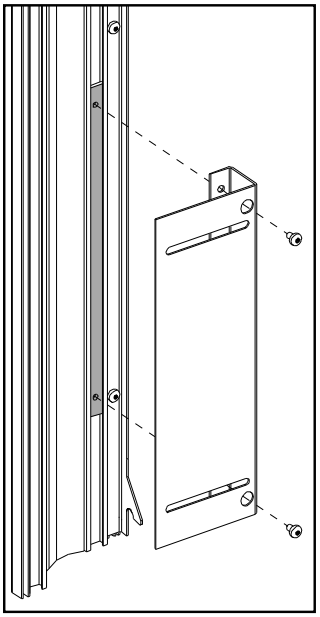

Figure 64: Installing Mounting Bracket.

Note: The bottom of the keystone and surround corners can be trimmed to make the surround smaller.

b) Subtract the minimum size of the surround (21¾" (552mm) x 31⅞" (809mm) for the small and 24" (609mm) x 36¼" (921mm) for the large) from the size needed. Write down the difference. In the Table 7 example, the differences are 1" (26mm) and 3" (76mm).

c) Mark the height difference on the left and right trim sides. Using the example, they would be marked 1" (26mm) from the bottom of each side, see dimension "A" in Figure 63.

d) Mark the center of the top trim, 15⅝" (397mm) from either side. From the center line mark half the width distance on either side. Using the example of 3" (76mm), there would be marks 1½" (38mm) on either side of the center line, see dimension "B/2" in Figure 63.

10. Fasten a mounting bracket to each of the four (4) mounting bracket backs using two (2) #8 T-20 screws (see Figure 64). They should be tight enough that they hold together but loose enough to slide them in the slots.

Secondary Installation

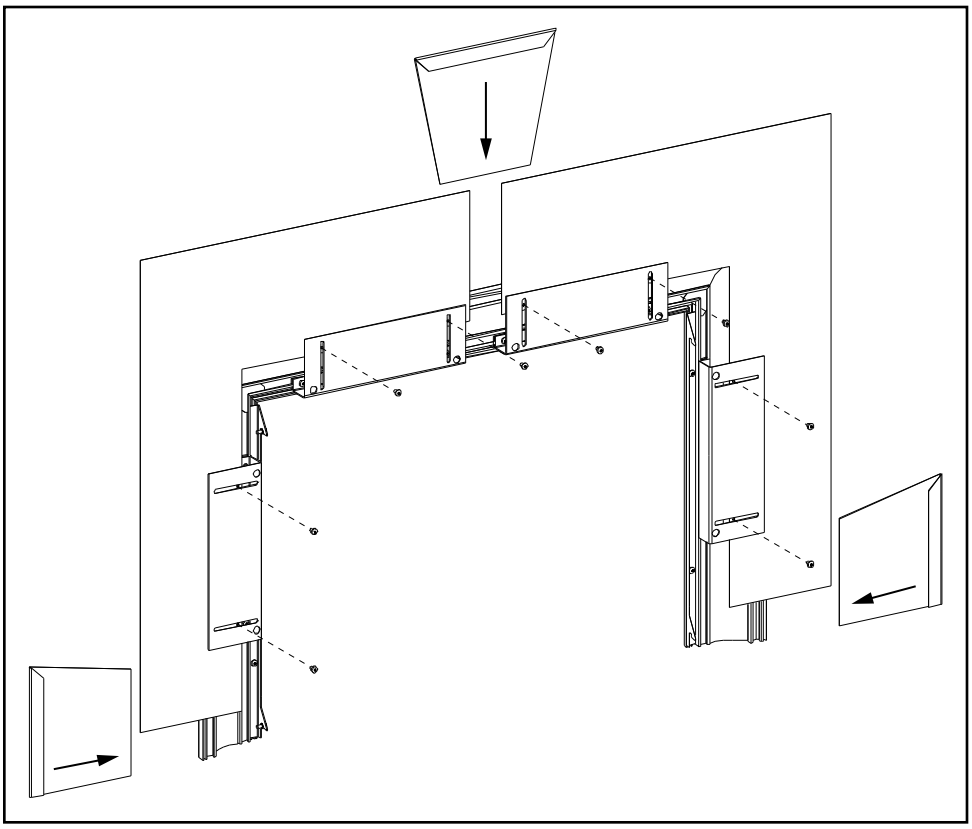

Figure 65: Installing Surround Corners, Keystone, & Covers.

11. Line the ends of the surround corners with the marks from step 9. Move the mounting brackets until the holes on the surround line up with the slots on the mounting brackets. When everything is lined up, secure the surround to the mounting brackets with eight (8) #8 T-20 screws (see Figure 65). Also tighten the eight (8) screws from step 9.
12. Center the keystone over the gap at the top of the trim and slide it into place. Slide the side covers over the bottoms of the sides so the cover will be as low as the trim (see Figure 65).

IMPORTANT: The trim panels or surrounds must not seal ventilation openings in the fireplace.

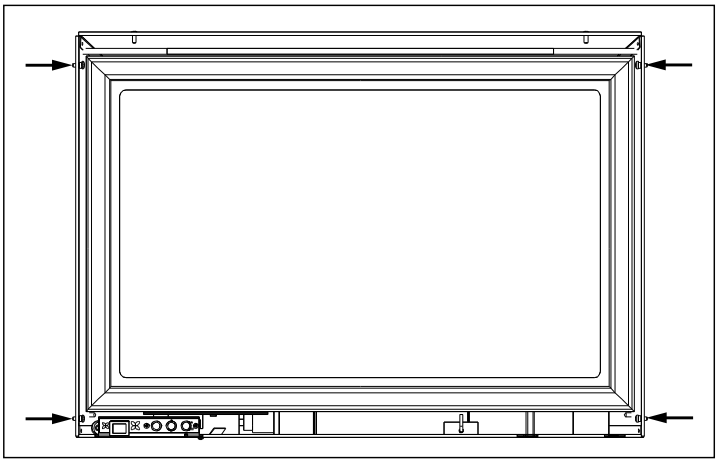

Figure 66: Bushing Locations.

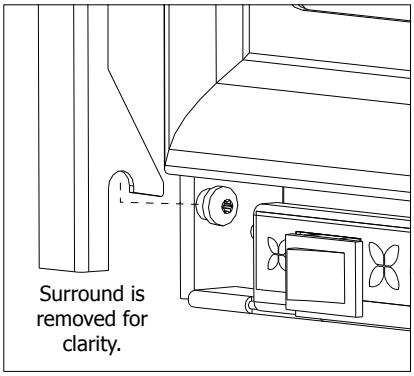

Figure 67: Bushing and Hook Close-Up.

INSTALLATION:
Lift the trim upright in front of the fireplace with the four (4) hooks pointing towards the fireplace. Slide the hooks over their corresponding bushings (see Figures 66 & 67). Ensure the hooks are secure before releasing the trim. The surround should be wiped with a damp cloth periodically.

REMOVAL:
Lift the trim straight up in order to unhook the notch on the hooks from the bushing. Pull the trim away from the fireplace. Place the trim where it will not be damaged.

Secondary Installation

Optional Cast Andiron & Grate:

Hook the Andiron assembly over the two (2) bushings at either side of the bottom of the Sonnet (see Figure 68) and snap them firmly down into place. When in place it will look similar to the image on the front cover of this Sonnet Owner's Manual.

Note: The mounting brackets may need to be adjusted to fit onto the bushings. Loosen the screws on the brackets, adjust the brackets, and then re-tighten the screws.

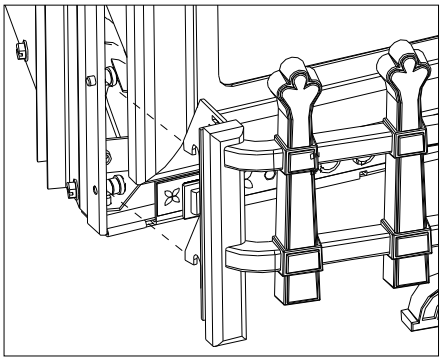

Figure 68: Hook Placements.

Brick Panel Installation:

NOTE: The brick liner is fragile and should be handled gently.

1. **Ensure the Sonnet is turned off and allow the unit to cool.**
2. Remove the glass door as shown in the Maintenance and Service - Glass Door Removal.

Warning: Do not touch or attempt to remove the glass if the fireplace is not completely cold. **Never operate the fireplace with the glass removed.**

3. Remove the log set and all ember material.
4. Choose which brick pattern you would like to face out.
5. There is a ledge at the back of the firebox (see Figure 69). Place the back brick panel on the ledge and ensure the panel is flush at the bottom and top (refer to Figure 70). Do not push at the center of the panel.
6. Slide the front of the left brick panel into the left lip at the front of the firebox. Ensure the panel is flush to the side of the firebox and the back brick panel while still being hooked behind the front lip (refer to Figure 71). Take care to not bump the brick panel on the burner.
7. Repeat step 6 for right brick panel.
8. Install the log set and ember material (refer to Secondary Installation - Log Set and Ember Installation) and the glass door.

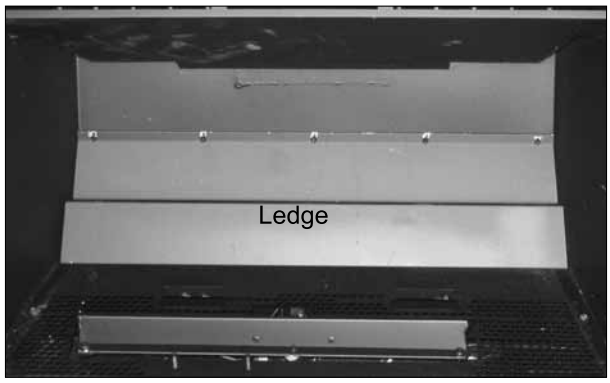

Figure 69: Back Brick Panel Ledge.



Figure 70: Back Brick Panel in Place.

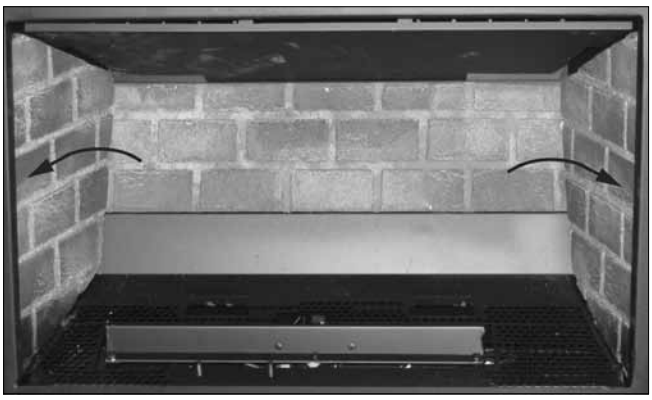

Figure 71: Side Brick Panels in Place.

Secondary Installation

Log Set and Ember Installation:

NOTE: The logs are fragile and should be handled gently.

The placement of the logs is not arbitrary. If they are positioned incorrectly, the flames can be "pinched" and will not burn correctly. The burner and a few of the logs come with locator pins and ledges, which make alignment easier. Using the pictures provided, carefully set the logs in place (see Figures 72 through 82).

Figure 72: The empty firebox showing the ledges for the back logs.

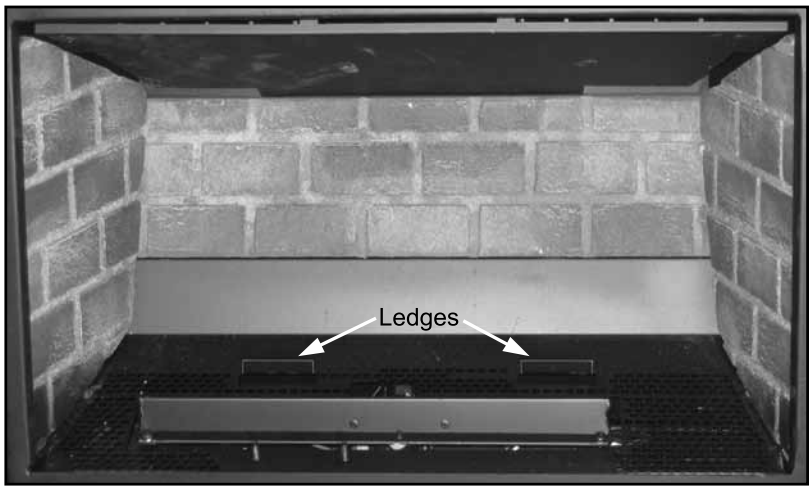

Figure 72. Empty firebox.



Figure 73: The **back left log** rests behind the left ledge pointed out in Figure 72. The front of the log rests at the end of the burner. Ensure it is flush against the left brick panel.

Figure 73. First Stage Log Set Installation.

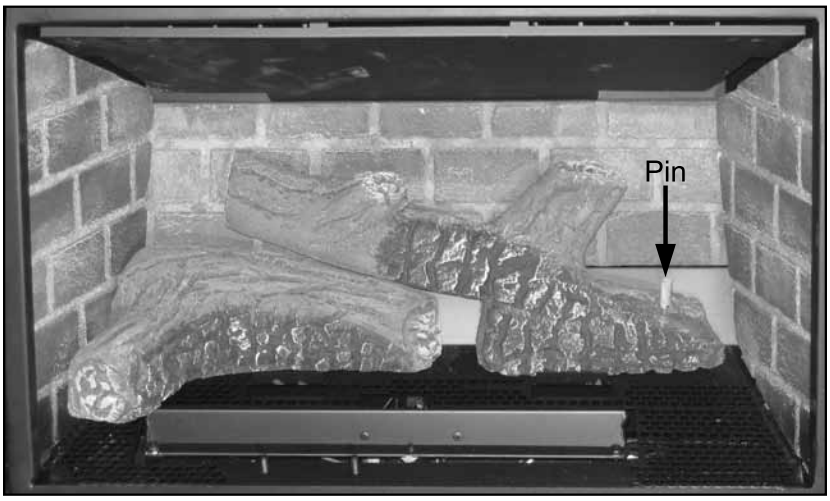

Figure 74: The **back right log** rests on the **back left log** and behind the right ledge pointed out in Figure 72. Ensure it is flush against the left brick panel and against the back wall.

Figure 74. Second Stage Log Set Installation.



Figure 75. Third Stage Log Set Installation.

Figure 75: The center of the **right log** fits onto the locator pin on the **back right log** (see Figure 74). The front of the log is to rest on the burner and the back end of the log rests on the back brick panel. Ensure the log does not block any burn ports.



Figure 76. Fourth Stage Log Set Installation.

Figure 76: The center of the **front log** fits onto the two (2) locator pins on the valve cover tray (see Figure 75).



Figure 77. Fifth Stage Log Set Installation.

Figure 77: Place the ember chunks and ember wool irregularly onto and around the front of the burner to create a realistic look. The ember wool comes in chunks that can be ripped into smaller pieces. The front log has been removed for clarity. See Figure 78 for complete log and ember set-up with the front log.

WARNINGS: DO NOT pack this ember material as this could create an unsafe condition. The pieces should be lightly placed so they don't block any of the burner ports.

DO NOT allow any of the embers to rest against the pilot assembly.

Caution: Use only the type of ember material supplied with this fireplace. Due to the irregular size of the ember material, there may be more than required. Use of other foreign materials on the burners may create dangerous conditions.



Figure 78. Log Set and Ember Installation.



Figure 79. Sonnet complete log set-up with embers burning.

NOTE: While the glass is still removed, it is recommended that the gas line be purged by lighting the pilot.

When lighting the fireplace for the first time since the log set and embers have been installed/replaced, watch for ignition at ALL the burner ports. If a long delay is noticed, turn the appliance off and wait for it to cool down. Remove the glass and rearrange the ember material, making sure none of the burner ports air holes are blocked.

Never operate the fireplace with the glass door removed.

Trouble Shooting

Problem	Possible Cause	Solution
No transmissions; remote control doesn't work.	Receiver must learn new code.	• Reset the receiver's code, refer to Maintenance And Service - Changing Remote Handset Code.
	One or more of the batteries are dead.	• Replace the batteries, refer to Maintenance And Service - Replacing The Batteries.
	The receiver is surrounded by metal, reducing the transmission range.	• Change the position of the antenna. **Warning:** Make sure that the antenna is not too close to the electrode cable and ignition coil (beneath the cover). It will damage the receiver (see Figure 80). 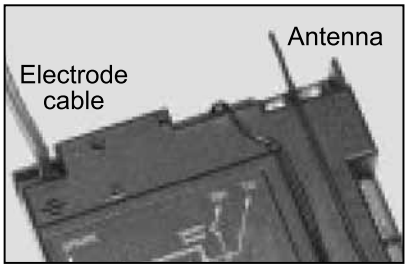 **Figure 80: Receiver's Antenna Position.**
	Receiver is malfunctioning.	• Replace receiver and reprogram code, refer to Maintenance And Service - Changing Remote Handset Code.
	Transmitter is malfunctioning.	• Replace transmitter and reprogram code, refer to Maintenance And Service - Changing Remote Handset Code.
	Wiring at the valve has been damaged.	• Replace the valve.
	Pins on 8 wire connector have been bent.	• Straighten the pins on the 8 wire connector.
	Gas control valve is turned OFF.	• Turn the gas valve ON.
	Pilot has gone out.	• Relight the pilot
No ignition; no tone.	Receiver	• Replace the receiver and reset the receiver's code, refer to Maintenance And Service - Changing Remote Handset Code.
No Ignition; One 5 second continuous tone (7 short beeps might be heard prior to the 5 second tone).	Loose wire.	• Check and secure all wires
	Receiver	• Replace the receiver and reset the receiver's code, refer to Maintenance And Service - Changing Remote Handset Code.
	Pins on 8 wire connector have been bent.	• Straighten the pins on the 8 wire connector.
	Valve.	• Replace the valve.

Trouble Shooting

	Possible Cause	Solution
Spark will not light the pilot after repeatedly pressing the spark ignitor.	Air in the pilot supply line.	• Purge the line or start ignition several times.
	No spark at pilot burner	• Check spark gap. • Check wiring connections to ignitor. • Check for spark in location along cable.
	Valve.	• Replace the valve.
	Over tightened thermocouple interrupter.	• Replace the valve and thermocouple interrupter.
	Receiver	• Replace the receiver and reset the receiver's code, refer to Maintenance And Service - Changing Remote Handset Code.
Pilot is lit and control continues to spark. Valve shuts off after 10 to 30 seconds. Valve operates manually.	Receiver.	• Replace the receiver and reset the receiver's code, refer to Maintenance And Service - Changing Remote Handset Code.
Pilot is lit and sparking stops. Valve shuts off after 10 to 60 seconds. Valve does not operate manually. Note: For manual operation turn the valve knob to the manual position and hold the safety magnet open with a pen for approximately 60 seconds (see Figure 91).	Not enough voltage generated from the thermocouple or too much resistance in the circuit. Note: To find which part of the circuit is causing the problem, a checklist for each application can be prepared using an Excel calculation available from Mertik Maxitrol. Possible parts are: ON-OFF switch, Temperature switches, Thermo current connections, Receiver.	• Use a digital multimeter set in the mV range and measure the voltage by touching one test lead to the metal body of the valve and the other lead will go to the spade connector of the thermocouple line (see Figure 82). The available voltage must be at least 5mV. Drop time can be measured after the thermocouple is fully heated; more than 15 seconds for the drop time is good.  **Figure 81: Valve's Safety Magnet.** 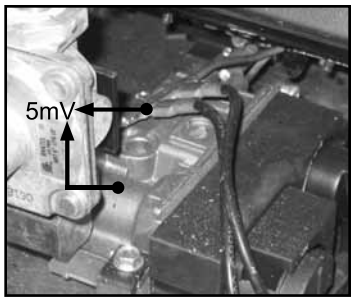 **Figure 82: Voltage Across Valve & Spade.**
	Thermocouple.	• Replace the thermocouple.
	Low inlet pressure.	• Confirm the regulator's pressure and sizing. Replace if necessary.
	Valve.	• Replace the valve. Do not over tighten the thermocouple interrupter.
	BV Only: Spill switch at the draft hood may have tripped.	• Correct cause of trip and reset switch.

Trouble Shooting

Problem	Possible Cause	Solution
3 short beeps while motor turns.	One or more of the batteries are low.	• Replace the batteries, refer to Maintenance And Service - Replacing The Batteries. **Warning:** Creating an electrical short between the batteries/battery box and metal parts of the appliance may render the receiver inoperable, therefore, do not use a screwdriver to remove the batteries.
Pilot flame lights but there is no main gas flow.	Valve turned down to pilot flow.	• Turn flame to high fire by pressing the up button on the remote handset
	Low inlet pressure.	• Confirm the regulator's pressure and sizing. Replace valve if necessary.
	Valve.	• Replace the valve.
Flame lifting	Leak in vent pipe.	• Check for leaks in vent connections.
	Improper vent configuration.	• Check vent configuration with manual.
	Terminal may be recirculating flue gases.	• Check to see if terminal is on correctly. • May need to install high wind termination cap. • Contact dealer.
Glass fogs up	Normal Condition: after the appliance warms up the glass will clear. **Due to additives in gas, glass may get hazy during operation** Clean as needed.	
Blue Flames	Normal during start up: flames will yellow as the fireplace heats up.	
Flames are burning "dirty" or sooting	Flame impingement	• Check log positioning. • Increase primary air by opening the venturi shutter. See also "Burners will not remain lit."
BV ONLY: Insufficient air for combustion	• Air tight house. • A vacuum in room due to other air-moving device.	• Supply make up air to the unit.

Parts List

Reference Number	Part Description	Part Number
1	120°F (49°C) Ceramic Fan Temperature Sensor	EC-001
2	FPI Burner Switch	EC-026
3	Domestic Power Cord (115V)	EC-042
4	Heyco Strain Relief	EC-044
5	Embers (Coal & Wool)	EC-046
6	Convection Blower 115V	EG22-001
	12 oz. Can of Flat Black Touch Up Paint	PAINT-12-FB
7	Blank Orifice	50-343
8	Dual Bulb Door Gasket (10ft)	50-634
9	Large Ember Nuggets Only	50-832
10	Ceramic Wool Embers Only	50-893
11	Sonnet Log set	50-1420
12	Sonnet Conversion Kit LP to NG Maxitrol	50-1445
12	Sonnet Conversion Kit NG to LP Maxitrol	50-1446
13	Maxitrol Remote Control	50-1458
14	Sonnet Owners Manual	50-1472
	Sonnet Vertical Vent Cap	50-1487
15	PSE Pilot Assembly	50-1488
16	Sonnet Flue Adaptor Gasket	50-1490
17	Sonnet DV Flue Adaptor Bottom Gasket	50-1491
18	Sonnet Valve Cover with Gasket	50-1492
19	Sonnet Remote Control Wall Mount Bracket	50-1493
20	Sonnet Door Complete	50-1494
21	Sonnet Door Latch Mechanism (Set of 2)	50-1495
22	Sonnet DV Flue Adaptor And Bottom with Gasket	50-1496
23	Sonnet B-Vent Flue Adaptor with Gasket	50-1497
24	RV47 Gas Regulator	50-1498
25	Sonnet 2” to 3” Air Intake Adaptor	50-1499
26	Sonnet Door Release Tool	50-1500
27	Sonnet Burner	50-1501

Parts List

Reference Number	Part Description	Part Number
28	PSE Thermocouple	50-1502
29	Sonnet 300°F (149°C) Spill Switch with Wires & Bracket	50-1503
30	GV60 Gas Valve	50-1504
31	GV60 Control Box	50-1505
32	GV60 Control Box Valve Cable	50-1506
33	GV60 3 Button Switch with Cable	50-1507
34	GV60 Battery Clip	50-1509
35	GV60 Battery Cable	50-1510
36	Sonnet 2” B-Vent Intake Air Plug	50-1511
	Sonnet 15’ 2” & 3” Flex Vent	50-1512
	Sonnet 2” & 3” Flex Couplers	50-1513
37	Sonnet Burner Tray Only	50-1515
38	Sonnet Fan Mounting Bracket Only	50-1516
39	Sonnet Cabinet Back	50-1517
40	Sonnet Pilot Shield	50-1524
41	PSE Thermocouple Wires (Set 2)	50-1536
42	Sonnet Control Panel Decal	50-1537
Reference Number	**Option Description**	**Part Number**
43	Sonnet Surround Adjustable	50-1414
44	Sonnet Surround Trimmable	50-1415
45	Sonnet Cast Andiron & Grate	50-1417
46	Sonnet Fan Kit	50-1418
47	Sonnet Firebox Brick Liner Double Sided	50-1419
48	Sonnet Colonial Surround Panel	50-1456
49	Sonnet Classic Surround Panel	50-1457
50	Sonnet Colonial Surround 4 Sided	50-1461
51	Sonnet Classic Surround 4 Sided	50-1462
52	Sonnet Base Shelf	50-1463
53	Sonnet Base Shelf Riser	50-1518

Parts Diagram - Components

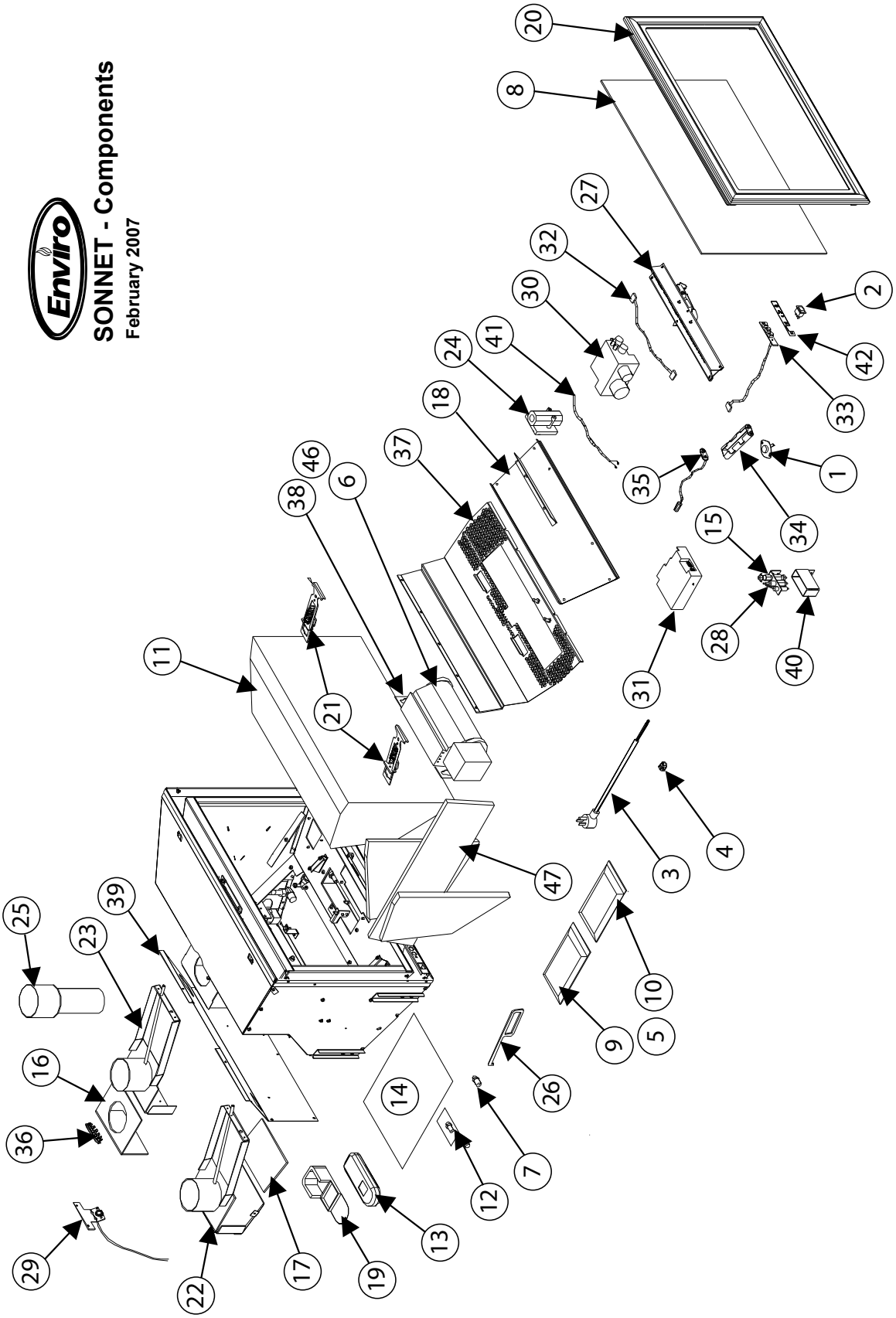

Parts Diagram - Options

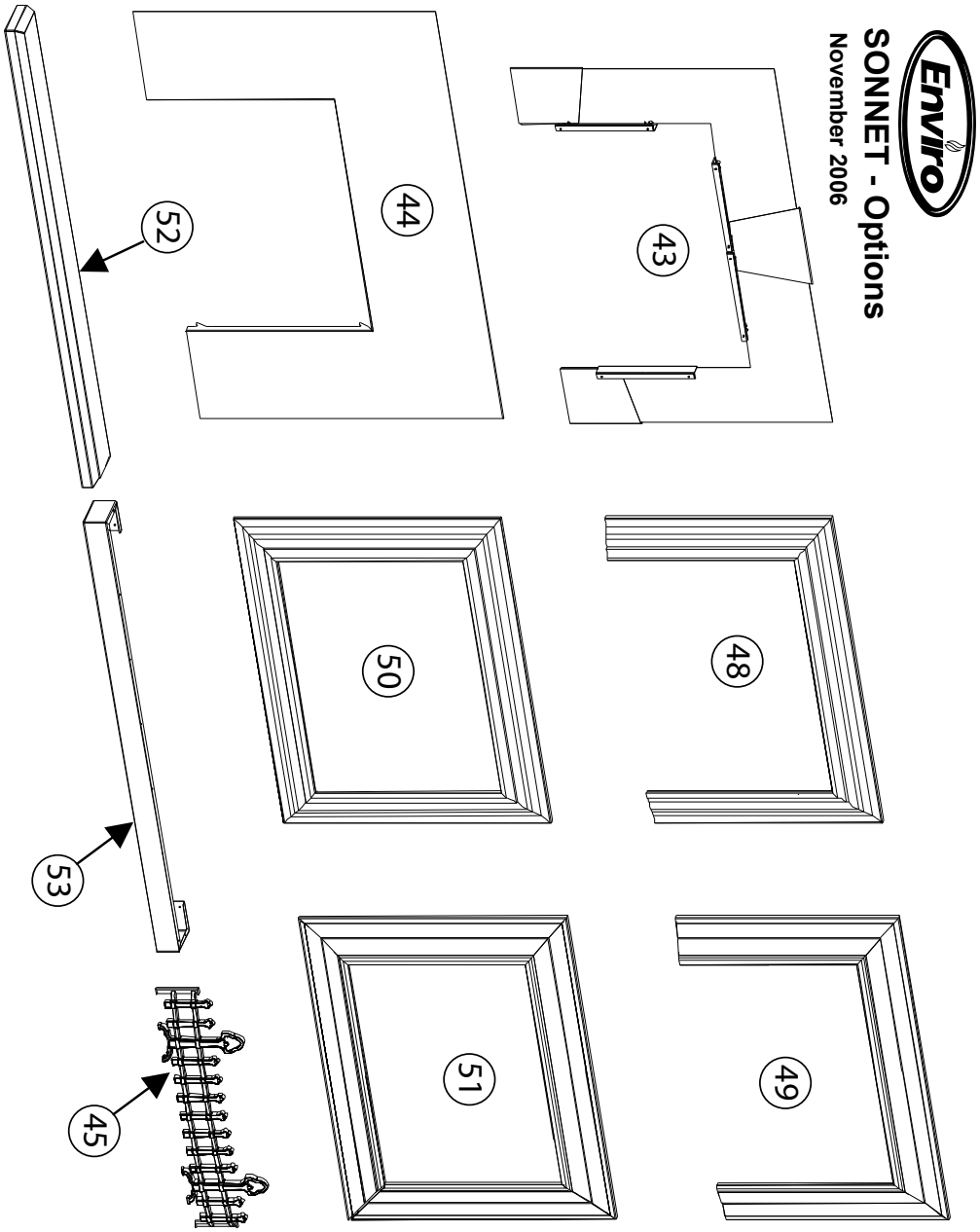

Warranty

Sherwood Industries Ltd. is the manufacturer of the Enviro line of heating products. At Sherwood Industries, our commitment to the highest level of quality and customer service is the most important thing we do. Each Enviro stove is built on a tradition of using only the finest materials and is backed by our Exclusive Lifetime Limited Warranty to the original purchaser. With Enviro, you're not just buying a fireplace or stove, you're buying a company with years of unequalled performance and quality.

Limited Lifetime Warranty:

Under this warranty, Sherwood Industries Ltd. covers the fireplace or stove body and accessories against defects in materials and workmanship, for part repair or replacement for the first seven (7) years and limited labour for the first two (2) years to the original purchaser. This Warranty covers: Firebox, Heat Exchanger, Steel Firebox Panels, Ceramic Logs & Panels, Burner, Ceramic Glass, Pedestals, Panels and Legs. Please see the exclusions and limitation section below as certain restrictions and exclusions apply to this warranty.

Limited Two (2) Year Warranty:

Under this warranty, Sherwood Industries Ltd. covers: Gas Assembly, Blower, Blower control, Temperature Sensors and Wire Harness against defects in materials and workmanship, for part repair or replacement for the first two (2) years and limited labour for the first two (2) years to the original purchaser. Please see the exclusions and limitation section below as certain restrictions and exclusions apply to this warranty.

Limited One (1) Year Warranty:

Under this warranty, Sherwood Industries Ltd. covers all exterior surface finishes against defects in materials and workmanship, for part repair or replacement and limited labour for the first (1) year to the original purchaser. Please see the exclusions and limitations section below as certain restrictions and exclusions apply to this warranty.

Here is how our Warranty works

If you have any concerns with your Enviro product, please contact the dealer where you purchased the fireplace or stove. Your dealer shall make all claims under this warranty in writing.

To the Dealer

When filling out a warranty claim, please complete the following information on an official warranty claim form:

Customer information: Name, address and telephone number of purchaser and date of purchase.

Dealer information: Date of installation, name of installer and dealer, serial number of the appliance, nature of complaint, defects or malfunction, description and part numbers of any parts replaced.

To the Distributor

Sign and verify that work and information are correct.

Exclusions and Limitations:

1. This Warranty does not cover tarnish, discoloration or wear on the plating or paint.
2. This Warranty excludes wear and tear or breakage caused by cleaning, moving or service on log set and panels.
3. A qualified installer must install this stove or fireplace. This Limited Warranty covers defects in materials and workmanship only if the product has been installed in accordance with local building and fire codes; in their absence, refer to the owner's manual. If the product is damaged or broken as a result of any alteration, willful abuse, mishandling, accident, neglect, or misuse of the product, the Limited Warranty does not apply.

4. The stove must be operated and maintained at all times in accordance with the instructions in the Owner's Manual. If the unit shows signs of neglect or misuse, it is not covered under the terms of this Warranty policy. Performance problems due to operator error will not be covered by the Limited Warranty policy.
5. As this is a heating appliance, some changes in colour of surface finishes may occur. This is not a flaw and as such is not covered under this warranty.
6. Some minor expansion, contraction, or movement of certain parts and resulting noise, is normal and not a defect and, therefore, is not covered under this Limited Warranty.
7. Misuse includes over-firing. Over-firing this appliance can cause serious damage and will nullify the Limited Warranty.
8. The Limited Warranty will cover glass thermal breakage only and will not cover misuse of the stove glass, including but not limited to glass that is struck, has surface contaminates or has had harsh or abrasive cleaners used on it.
9. This warranty does not cover products made or provided by other manufacturers and used in conjunction with the operation of this stove without prior authorization from Sherwood Industries Ltd. The use of such products may nullify the Limited Warranty on this stove. If unsure as to the extent of this Limited Warranty, contact your authorized Enviro dealer before installation.
10. Sherwood Industries Ltd. will not be responsible for inadequate performance caused by environmental conditions.
11. The Limited Warranty does not cover installation and operational related problems such as use of downdrafts or spillage caused by environmental conditions. Environmental conditions include but are not limited to nearby trees, buildings, roof tops, wind, hills, mountains, inadequate venting or ventilation, excessive offsets, negative air pressures or other influences caused by mechanical systems such as furnaces, fans, clothes dryers etc.
12. The Limited Warranty is void if:
    a) The stove has been operated in atmospheres contaminated by chlorine, fluorine or other damaging chemicals.
    b) The stove is subject to submersion in water or prolonged periods of dampness or condensation.
    c) Any damage to the unit, combustion chamber or other components due to water, or weather damage which is the result of, but not limited to, improper chimney/venting installation.
    c) Salt air in coastal areas or high humidity can be corrosive to the finish; these environments can cause rusting. Damage caused by salt air or high humidity is not covered by the Limited Warranty.
13. Exclusions to the Limited Warranty include: injury, loss of use, damage, failure to function due to accident, negligence, misuse, improper installation, alteration or adjustment of the manufacturer's settings of components, lack of proper and regular maintenance, alteration, or act of God.
14. The Limited Warranty does not cover damage caused to the fireplace or stove while in transit. If this occurs, do not operate the stove and contact your courier and/or dealer.
15. Limited Warranty does not extend to or include firebox paint, door or glass gaskets with damage caused by normal wear and tear, or exterior paint discoloration or chipping, worn gaskets, etc.
16. The Limited Warranty does not include damage to the unit caused by abuse, improper installation, or modification of the unit.
17. Damage to plated surfaces caused by fingerprints, scratches, melted items, or other external scores and residues left on the plated surfaces from the use of abrasive cleaners or polishes is not covered in this warranty.
18. The Limited Warranty does not cover tarnish, discoloration or wear on the plated surfaces.
19. The paint on the Metal Brick Liner may peel. This is due to the extreme conditions applied to the paint during normal usage. It is not a flaw and is not covered under warranty.

20. Sherwood Industries Ltd. is free of liability for any damages caused by the fireplace or stove, as well as inconvenience expenses and materials. The Limited Warranty does not cover incidental or consequential damages.
21. The Limited Warranty does not cover any loss or damage incurred by the use or removal of any component or apparatus to or from the Enviro fireplace or stove without the express written permission of Sherwood Industries Ltd. and bearing a Sherwood Industries Ltd. label of approval.
22. Any statement or representation of Enviro products and their performance contained in Enviro advertising, packaging literature, or printed material is not part of the Limited Warranty.
23. The Limited Warranty is automatically voided if the fireplace or stove's serial number has been removed or altered in any way. If the stove is used for commercial purposes, it is excluded from the Limited Warranty.
24. No dealer, distributor, or similar person has the authority to represent or warrant Enviro products beyond the terms contained within the Limited Warranty. Sherwood Industries Ltd. assumes no liability for such warranties or representations.
25. Sherwood Industries Ltd. will not cover the cost of the removal or re-installation of the stove, hearth, facing, mantels, venting or other components.
26. Labour to replace or repair items under this Limited Warranty will be covered per our warranty service fee reimbursement schedule. Labour rates are set per component and as such total labour costs may not be covered.
27. Sherwood Industries Ltd. is not liable for freight or labour on any stove replaced in-field and is not liable for travel costs for service work. In the event of in-home repair work, the customer will pay any in-home travel fees or service charges required by the Authorized Dealer.
28. At no time will Sherwood Industries Ltd. be liable for any consequential damages which exceed the purchase price of the unit. Sherwood Industries Ltd. has no obligation to enhance or modify any stove once manufactured (example: as a stove evolves, field modifications or upgrades will not be performed).
29. This Limited Warranty is applicable only to the original purchaser and it is non-transferable.
30. This warranty only covers Enviro products that are purchased through an authorized Enviro dealer.
31. If for any reason any section of the Limited Warranty is declared invalid, the balance of the warranty remains in effect and all other clauses shall remain in effect.
32. The Limited Warranty is the only warranty supplied by Sherwood Industries Ltd., the manufacturer of the stove. All other warranties, whether express or implied, are hereby expressly disclaimed and purchaser's recourse is expressly limited to the Limited Warranty.
33. Sherwood Industries Ltd. and its employees or representatives will not assume any damages, either directly or indirectly, caused by improper usage, operation, installation, servicing or maintenance of this stove.
34. Sherwood Industries Ltd. reserves the right to make changes without notice. Please complete and mail the warranty registration card and have the installer fill in the installation data sheet in the back of the manual for warranty and future reference.
35. Sherwood Industries Ltd. is responsible for stocking parts for a maximum of seven (7) years after discontinuing the manufacture or incorporation of the item into its products. An exception to this would be if an OEM supplier is not able to supply a part.

Installation Data Sheet

The following information must be recorded by the installer for warranty purposes and future reference.

NAME OF OWNER:

_____

ADDRESS:

_____

_____

_____

PHONE:_____

NAME OF DEALER:

_____

ADDRESS:

_____

_____

_____

PHONE:_____

MODEL:_____

SERIAL NUMBER:_____

DATE OF PURCHASE: _____ (dd/mm/yyyy)

DATE OF INSTALLATION:_____(dd/mm/yyyy)

☐ DIRECT VENT ☐ B-VENT

☐ NATURAL GAS (NAT) ☐ PROPANE(LPG)

INLET GAS PRESSURE:_____in WC

MAIN BURNER ORIFICE:_____# DMS

PILOT ORIFICE #_____OR_____in diam.

INSTALLER'S SIGNATURE:

_____

NAME OF INSTALLER:

_____

ADDRESS:

_____

_____

_____

PHONE:_____

MANUFACTURED BY:
SHERWOOD INDUSTRIES LTD.
6782 OLDFIELD RD. SAANICHTON, BC, CANADA V8M 2A3
www.enviro.com
June 28, 2010
C-11253