SHERWOOD INDUSTRIES IS AN ENVIRONMENTALLY RESPONSIBLE COMPANY. THIS MANUAL IS PRINTED ON RECYCLED PAPER.

PLEASE KEEP THESE INSTRUCTIONS FOR FUTURE REFERENCE

VISTAFLAME

PELLET STOVE

VF-55-FS

OWNER'S MANUAL



PLEASE READ THIS ENTIRE MANUAL BEFORE INSTALLATION AND USE OF THIS PELLET-BURNING ROOM HEATER. FAILURE TO FOLLOW THESE INSTRUCTIONS COULD RESULT IN PROPERTY DAMAGE, BODILY INJURY OR EVEN DEATH.

Contact your building or fire officials about restrictions and installation inspection requirements in your area.

50-2086

Table of Contents

Introduction.....3
- Rating Label Location.....3
- Fuel Quality.....3

Safety Warnings & Recommendations.....4

Operating Instructions.....6
- Dimensions & Specifications.....6
- Control Board Functions.....7
- Automatic Safety Features of Your Pellet Stove.....7
- Operating Your Pellet Stove.....7
- Turning Your Pellet Stove Off.....9
- Slider/Damper Set-Up.....9

Routine Cleaning and Maintenance.....10

Warranty.....13

Installation Data Sheet.....16

Introduction

* **This manual is designed for the home owner in conjunction with the technical manual.** *

Rating Label Location:

The rating label is located on the inside of the hopper.

Fuel Quality:

Fuel quality is important, please read the following:

Your Vista Flame pellet stove has been designed to burn ¼" (6mm) dia wood pellets and other organic fuels. DO NOT use this appliance as an incinerator. DO NOT use unsuitable and non recommended fuels, including liquid fuels as this will void any warranties stated in this manual.

The performance of your pellet stove is greatly affected by the type and quality of fuel being burned. As the heat output of various quality fuels differs, so will the performance and heat output of the pellet stove.

CAUTION: It is important to select and use only fuel that are dry and free of dirt or any impurities such as high salt content. Dirty fuel will adversely affect the operation and performance of the unit and will void the warranty. The Pellet Fuel Industries (P.F.I.) has established standards for wood pellet manufacturers. We recommend the use of pellets that meet or exceed these standards. Ask your dealer for a recommended pellet type.

ASH: The ash content of the fuel and operation of your stove will directly determine the frequency of cleaning. The use of high ash fuels may result in the stove needing to be cleaned daily. A low ash fuel may allow longer intervals between cleaning.

CLINKERING: [clinkers are silica (sand) or other impurities in the fuel that will form a hard mass during the burning process]. This hard mass will block the air flow through the Burn Pot Liner and affect the performance of the stove. Any fuel, even approved types, may clinker. Check the Burn-Pot Liner daily to ensure that the holes are not blocked with clinkers. If they become blocked, remove the liner (when the unit is cold) and clean/scrape the clinkers out. Clean the holes with a small pointed object if required. Refer to the section Routine Cleaning and Maintenance.

FUEL FEED RATES: Due to different fuel densities and sizes, fuel feed rates may vary. This may require an adjustment to the slider damper setting or to the auger feed trim setting.

Since Sherwood Industries Ltd. has no control over the quality of fuel that you use, we assume no liability for your choice in fuels.

FILLING FUEL HOPPER: Open lid on top of unit, check hopper for foreign objects, empty the bag into the hopper, and ensure hopper lid closes completely.

Store fuels at least 36" (1 m) away from the pellet stove.

WARNING: Parts of the appliance, especially the external surfaces, will be hot to touch when in operation so use due care.

FLAMMABLE LIQUIDS: Never use gasoline, gasoline-type lantern fuel, kerosene, charcoal lighter fluid, or similar liquids to start or "freshen up" a fire in the heater. Keep all such liquids well away from the heater while it is in use.

Safety Warnings & Recommendations

Please read this entire Owner's Manual before installing or operating your Vista Flame Pellet Stove. Failure to follow these instructions may result in property damage, bodily injury or even death. Any unauthorized modification of the appliance or use of replacement parts not recommended by the manufacturer is prohibited. All national and local regulations and shall be complied with when operating this appliance.

Caution: Do not connect to any air distribution duct or system.

Warning: Never place wood, paper, furniture, drapes or other combustible materials within 48" (122cm) of the front of the unit, 12" (30.5cm) from each side, and 4" (10cm) from the back of the unit. Do not let children or pets touch it when it is hot.

To prevent the possibility of a fire, ensure that the appliance is properly installed by adhering to the installation instructions. An Vista Flame dealer will be happy to assist you in obtaining information with regards to your local building codes and installation restrictions.

FIRE EXTINGUISHER AND SMOKE DETECTION: All homes with a pellet burning stove should have at least one fire extinguisher in a central location known to all in the household. Smoke detectors should be installed and maintained in the room containing the stove. If it sounds the alarm, correct the cause but do not deactivate. You may choose to relocate the smoke detection devise within the room; DO NOT REMOVE THE SMOKE DETECTOR FROM THE ROOM.

CHIMNEY OR RUN AWAY FIRE: Call local fire department (or dial 911). Close the draft fully. Extinguish the fire in the burn pot liner with a cup of water and close the door. Examine the flue pipes, chimney, attic, and roof of the house, to see if any part has become hot enough to catch fire. If necessary, spray with fire extinguisher or water from the garden hose. IMPORTANT: Do not operate the stove again until you are certain the chimney and its lining have not been damaged.

OPERATION: The door and ash drawer must be kept closed when the unit is in operation to prevent fume spillage and for proper and safe operation of the pellet stove. Also ensure all gaskets on the door are checked and replaced when necessary. **Unit hot while in operation. Keep children, clothing and furniture away. Contact may cause skin burns.**

CAUTION: When operating during adverse weather, if the unit exhibits dramatic changes in combustion stop using the unit immediately.

FUEL: This stove is designed and approved to only burn wood pellets of any quality, corn, wheat, barley, and grass. Dirty fuel will adversely affect the operation and performance of the unit and may void the warranty. Check with your dealer for fuel recommendations. **THE USE OF CORDWOOD IS PROHIBITED BY LAW. Do not burn garbage or flammable fluids such as gasoline, naptha or engine oil.**

SOOT: Operation of the stove with insufficient combustion air will result in the formation of soot which will collect on the glass, the heat exchanger, the exhaust vent system, and may stain the outside of the house. Frequently check your stove and adjust the slider/damper as needed to ensure proper combustion. **See: "Slider/Damper Setting".**

CLEANING: There will be some build up of fly ash and small amounts of creosote in the exhaust. This will vary due to the ash content of the fuel used and the operation of the stove. It is advisable to inspect and clean the exhaust vent semi-annually or every two tons of pellets.

The appliance, flue gas connector and the chimney flue require regular cleaning. Check them for blockage prior to re-lighting after a prolonged shut down period.

ASHES: Disposed ashes should be placed in a metal container with a tight fitting lid. The closed container of ashes should be on a non-combustible surface, well away from all combustible materials pending final disposal. If the ashes are disposed of by burial in soil or otherwise locally dispensed, they should be retained in the closed container until all cinders have thoroughly cooled.

Safety Warnings & Recommendations

ELECTRICAL: The use of a surge protected power bar is recommended. The unit must be grounded. The grounded electrical cord should be connected to a standard 110-120 volts (4.2 Amps), 60 hertz electrical outlet and also must be accessible. If this power cord should become damaged, a replacement power cord must be purchased from the manufacturer or a qualified Vista Flame dealer. Be careful that the electrical cord is not trapped under the appliance and that it is clear of any hot surfaces or sharp edges. This unit's maximum power requirement is 504 watts.

When installing the stove in a mobile home, it must be electrically grounded to the steel chassis of the home and bolted to the floor.

GLASS: Do not abuse the glass by striking or slamming the door. Do not attempt to operate the stove with broken glass. The stove uses ceramic glass. Replacement glass must be purchased from an Vista Flame dealer. Do not attempt to open the door and clean the glass while the unit is in operation or if glass is hot. To clean the glass, use a soft cotton cloth and mild window cleaner, gas or wood stove glass cleaner, or take a damp paper towel and dip into the fly ash. This is a very mild abrasive and will not damage the glass.

KEEP ASH PAN FREE OF RAW FUEL. DO NOT PLACE UNBURNED OR NEW PELLET FUEL IN ASH PAN. A fire in the ash pan may occur.

INSTALLATION: Contact your local building or fire official to obtain a permit and any information on installation restrictions and inspection requirements for your area.

Be sure to maintain the structural integrity of your home when passing a vent through walls, ceilings, or roofs, and all construction meets local building codes. It is recommended that the unit be secured into its position in order to avoid any displacement. This appliance must be installed on a floor with an adequate load bearing capacity, if existing construction doesn't meet load capacity, suitable measures (e.g. load distributing plate) must be taken to achieve it.

DO NOT INSTALL A FLUE DAMPER IN THE EXHAUST VENTING SYSTEM OF THIS UNIT.
DO NOT CONNECT THIS UNIT TO A CHIMNEY FLUE SERVING ANOTHER APPLIANCE.

FRESH AIR: This unit uses large quantities of air for combustion; outside Fresh Air connection is **strongly** recommended. Fresh Air **must** be connected to all units installed in Mobile and "Air Tight Homes" (R2000) or where required by local codes.

Consider all large air moving devices when installing your unit and provide room air accordingly. NOTE: Extractor fans when operating in the same room or space as the appliance may cause problems. Limited air for combustion may result in poor performance, smoking and other side effects of poor combustion.

The stove's exhaust system works with negative combustion chamber pressure and a slightly positive chimney pressure. It is very important to ensure that the exhaust system be sealed and airtight. The ash pan and viewing door must be locked securely for proper and safe operation of the pellet stove.

Do not burn with insufficient combustion air. A periodic check is recommended to ensure proper combustion air is admitted to the combustion chamber. Setting the proper combustion air is achieved by adjusting the slider damper located on the left side of the stove.

Soot or creosote may accumulate when the stove is operated under incorrect conditions such as a rich burn (black tipped, lazy orange flames).

If you have any questions with regards to your stove or the above-mentioned information, please feel free to contact your local dealer for further clarification and comments.

SINCE SHERWOOD INDUSTRIES LTD. HAS NO CONTROL OVER THE INSTALLATION OF YOUR STOVE, SHERWOOD INDUSTRIES LTD. GRANTS NO WARRANTY IMPLIED OR STATED FOR THE INSTALLATION OR MAINTENANCE OF YOUR STOVE. THEREFORE, SHERWOOD INDUSTRIES LTD. ASSUMES NO RESPONSIBILITY FOR ANY CONSEQUENTIAL DAMAGE(S).

SAVE THIS INSTRUCTION MANUAL FOR FUTURE REFERENCE.

Specifications

Dimensions:

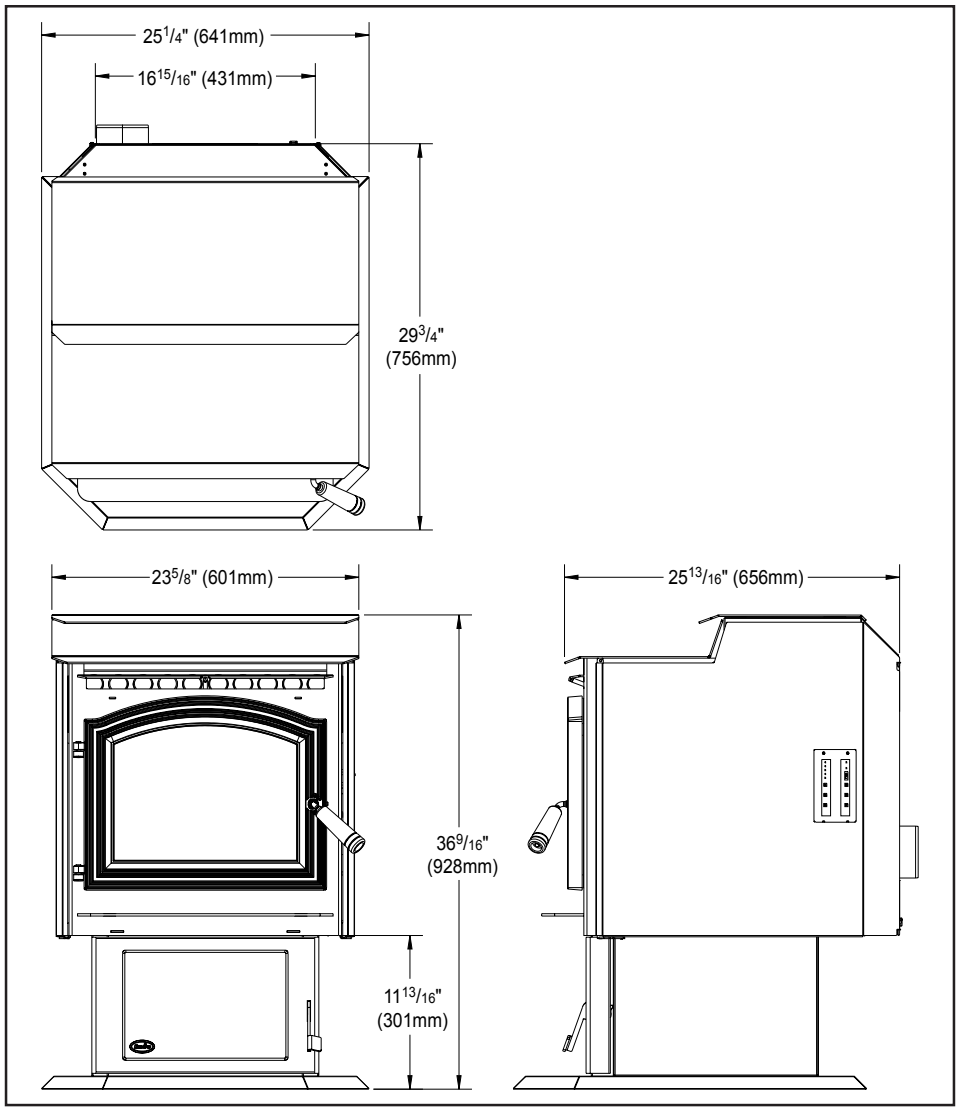

Figure 1: Dimensions of VF-55-FS.

Specifications:

Input rating when using: Wood Pellets/Corn - 55,000BTU (16.1KW•hr) & Wheat/Barley - 53,000BTU (15.5KW•hr).

Table 1: VF-55-FS Specifications.

Description	Fuel type	
Residential Pellet Heater	6mm (¼") dia. Pellets - wood, corn, wheat, & barley*	
Voltage	Current	Max Power
110 - 120 V	4.2 Amps	504 Watts
Frequency	Hopper Capacity	Consumption on Low
60 Hz	up to 80 lb (36.3 Kg)	1.5 lb/hr (0.68 Kg/hr)*
Testing Standard	Weight (with full hopper)	Consumption on High
ASTM 1509-04	395 lb (179.2 Kg)	6.5 lb/hr (2.95 Kg/hr)*

*Note: Consumption will vary with the type of fuel used.

Operating Instructions

Control Board Functions:

1. **ON/OFF BUTTON:** Used to turn the unit ON and OFF manually.
2. **COMBUSTION AIR TRIM BUTTON:** Increases or Decreases the Fan voltage by 2.5volts on all feed settings. When pressed all lights on Heat Level Indicator will come on except the one that is the set point. Hold Trim Button down and press the UP or DOWN Heat Level Arrow to adjust setting. #3 Light is the default setting.

   Depending on Fuel quality Ignition problems may occur at higher altitudes, this can be resolved by trimming the Combustion Fan to a higher setting.
3. **FUEL TYPE BUTTON:** Used to switch between fuel type modes; Pellet (for all qualities of wood pellets) and Multifuel (for all fuels including wood pellets). When set on Multifuel it will run at a reduced High Feed Rate with wood pellets. **NOTE:** Fuel Type can only be chnaged when the unit is cold.

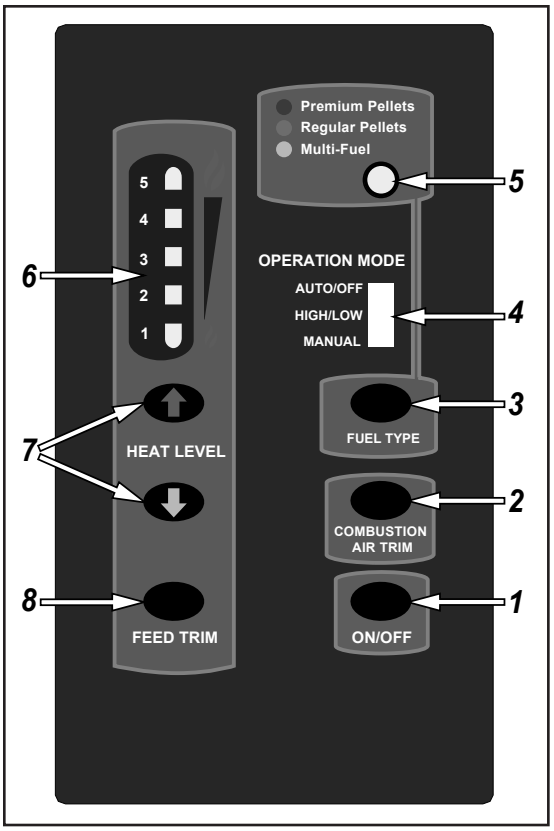

Figure 2: Circuit Board Control Panel Decal

4. **THERMOSTAT SWITCH:** Sets the unit's control mode; AUTO/OFF or HIGH/LOW (when using a Thermostat or Timer) or MANUAL.
5. **FUEL TYPE LIGHTS:** Shows the present Fuel Type selected; Premium Pellets are Red, Regular Pellets are Green, and Multi-fuel is Yellow. The Light flashes during start-up, and when the Thermostat is in control of the Unit. The Light stops flashing when the Exhaust Sensor closes.
6. **HEAT OUTPUT INDICATOR:** Shows the present Heat Level output setting and the Feed Trim while it is being adjusted.
7. **HEAT LEVEL ADJUSTMENT BUTTONS:** Changes the Heat Setting of the Unit from LO to HIGH. Press the Arrow Up button to increase Heat, and Arrow Down to decrease Heat.
8. **FEED TRIM BUTTON:** Used in conjunction with the Heat Level Adjustment Buttons to adjust the Feed Trim. It can be increased by two (2) feed settings or it can be decreased by two (2) feed settings. The Feed Trim can only be adjusted one setting at a time.

Automatic Safety Features of Your Pellet Stove:

A. EXHAUST TEMPERATURE SWITCH: The stove will shut off when the fire goes out and the exhaust temperature drops below 49°C (120°F). It will display a #3 flash code.

B. HIGH LIMIT SAFETY SWITCH: If the temperature on the hopper reaches 93°C (200°F), the auger will automatically stop, the stove will shut down, and it will display a #4 flash code. If this happens, call your local dealer to reset the 93°C (200°F) high limit switch. **ALSO FIND THE REASONS WHY THE UNIT OVERHEATED.**

C. VACUUM SWITCH: Notifies when the unit has lost vacuum. This can be caused by either a combustion fan/vent failure, or simply the unit's outer door, pedestal door, and/or hopper lid beening left open. It will display a #2 flash code.

Operating Instructions

Operating Your Pellet Stove:

DO NOT OPERATE THE UNIT WITH THE DOOR OR ASH BOX OPEN. Keep hopper lid closed except during re-fuelling.

CAUTION: When operating during adverse weather, such as high winds or freezing rain, if the unit exhibits dramatic changes in combustion stop using the unit immediately. Watch for blocked exhaust outlet.

PRE-BURN CHECK: The burn pot liner holes must be clear and the liner installed properly against the ignitor tube and locked in place. Check the hopper for enough pellets to start the unit.

Note: Fuel Type can only be changed when the unit is cold. The thermostat mode can be changed during normal operation.

The unit has an automatic cleaning cycle; every thirty (30) minutes the agitator will turn continuously for one (1) minute to help clean out the burn pot liner.

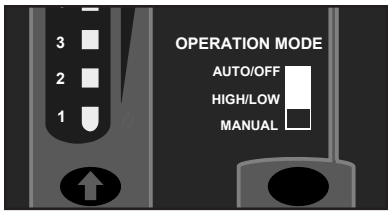

Figure 3: Thermostat Switch in MANUAL position.

MANUAL MODE:

All control of circuit board function is adjusted at the circuit board.

INITIAL START-UP: Press the ON / OFF button. The stove will turn on. The Fuel Type Light will flash (the Auger Feed Rate is pre-programmed during start-up). The Heat Level Indicator will show the Heat Level that the stove will run at after start-up.

If this is the first time the unit has been started or the unit has run out of fuel, the auger may need to be primed. If there is no fuel in the burn pot after two (2) minutes the liner can be primed with a handful of pellets .

The agitator will not operate for the first ten (10) minute after the ON button has been pressed. After the ten (10) minutes it will pulse at the same interval as the feed auger.

When the start-up sequence is complete the unit will ramp up to its heat level setting, this may take up to fifteen (15) minutes.

Once a fire has been established, the convection blower will turn on after ten (10) minutes.

To OPERATE: Press the Heat Level buttons to change the desired Heat Level Output setting.

The speed of the convection blower is controlled by the setting of the heat level.

The Feed Trim button pressed in conjunction with the Heat Level adjustment buttons to adjust the Feed Trim. It can be increased by two (2) feed settings or it can be decreased by two (2) feed settings.

HIGH/LOW MODE: (Requires a Thermostat or Timer)
INITIAL START-UP: See MANUAL MODE above.

OPERATION: When the thermostat calls for heat (contacts are closed) the stove settings are adjustable as per Manual Mode. When the thermostat contacts open, the HEAT LEVEL and Fans will drop down to the LOW setting until the thermostat contacts close again. The stove will come back to the previous HEAT LEVEL setting once the thermostat contacts close.

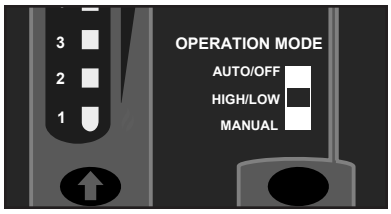

Figure 4: Thermostat Switch in HIGH/LOW position.

AUTO/OFF MODE: (Requires a Thermostat or Timer)

INITIAL START-UP: See MANUAL MODE above.

OPERATION: When the thermostat contacts close, the unit will light automatically. Once up to temperature, the stove operates the same as in MANUAL. When the thermostat contacts open, the stove's HEAT LEVEL and Fans will drop down to the LOW setting for 30 minutes. If the thermostat contacts close within the 30 minutes, the HEAT LEVEL will return to the

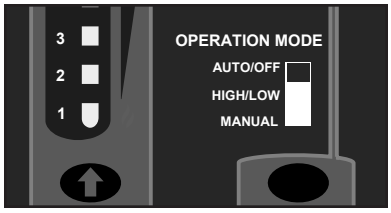

Figure 5: Thermostat Switch in AUTO/OFF position.

previous MANUAL setting. If the thermostat contacts remain open, the stove automatically begins its shutdown routine. The stove will re-light when the thermostat contacts close again.

Turning Your Pellet Stove Off:

- MANUAL and HI / LOW mode: To turn the unit OFF, simply press the ON / OFF button. This will stop the feed of pellets. The blowers will continue to operate and cool the stove down. When cool enough, the stove will turn off.
- AUTO / OFF mode: To turn the unit OFF, turn the Thermostat down or Timer off.
- On shut down the burn pot agitator will run continuosly for five (5) minutes on premium mode, one (1) minute on regular mode, and five (5) minutes on multi-fuel mode.

DO NOT turn unit off during start-up or unplug unit while operating; this may lead to smoke escaping from the stove.

Slider/Damper Set-Up:

This is used to regulate the airflow through the pellet stove. The slider damper should only be adjusted if the desired flame setting could not be achieved using the Circuit Boards Air Trim Button.

Before adjusting the Slider/Damper set the heat level on the Circuit Board to the #3 setting. Trim the Combustion Air to a higher setting to increase the Magnahelic pressure. Trim the Combustion Air down to decrease the Magnahelic pressure.

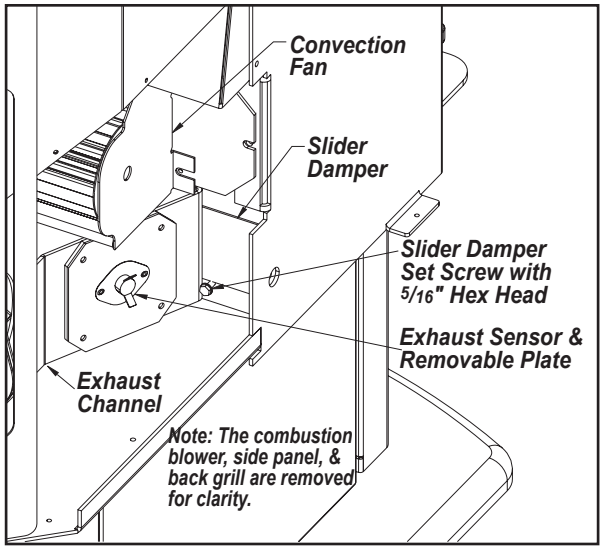

Figure 6: Slider/Damper Plate in Unit.



Figure 7: Efficient Flame.

This unit is designed to operate with a Magnahelic pressure of **0.15-0.17 inches of water column (37-42 Pa)** on the High Fire setting. Some Fuels may require a higher or lower setting. The reading can be taken from the ⅛" hole located on the Unit's lower left Pedestal Side.

Note: The slider screw is tightened at the factory to holding the slider fully open; DO NOT ADJUST.

If, after long periods of burning, the fire builds up and overflows the burn pot or there is a build up of clinkers, this would be a sign that the fuel quality is poor, this requires more primary air.

The easiest way to make sure that an efficient flame is achieved is to understand the characteristics of the fire.

- A tall, lazy flame with dark orange tips requires more air.
- A short, brisk flame, like a blowtorch, has too much air .
- If the flame is in the middle of these two characteristics with a bright yellow/orange, active flame with no black tips then the air is set for proper operation, refer to Figure 7.

SPECIAL NOTES:

Fuel quality is a major factor in how the stove will operate. If the fuel has a high moisture content or ash content the fire will be less efficient and has a higher possibility of the fire building up and creating clinkers (hard ash build-up).

Routine Cleaning and Maintenance

The following list of components should be inspected and maintained routinely to ensure that the appliance is operating at its optimum and giving you excellent heat value. The appliance, flue gas connector and the chimney flue require regular cleaning. Check them for blockage prior to re-lighting after a prolonged shut down period.

Check the Burn Pot Liner DAILY	
Weekly	Bi-annually or 2 Tons of Fuel
Burn Pot and Liner - Empty	Exhaust Vent
Agitator	Fresh Air Intake Tube
Heat Exchanger Tubes	Blower Mechanisms
Door Glass	Heat Exchanger Tubes
Ash Pan and Door Gaskets	Behind Firebox Liners
Inside Firebox	All Hinges
Door Latch	Post Season Clean-up
Ash Box	

TOOLS REQUIRED TO CLEAN UNIT:
Torx T-20 Screwdriver, ¼", 5/16" 3/8", & 7/16" wrench and/or socket, Brush, Soft Cloth, and Vacuum with fine filter bag

BURNER POT AND LINER (Checked Daily/Emptied Weekly)
This is the 'pot' where the pellets are burned. **Only clean when the unit is cold.**
Note: If, after long periods of burning, the fire continually builds up and overflows the burn pot or there is a build up of clinkers, this is an indication that the pellet fuel quality is poor or the stove may need cleaning. Check the stove for ash build up (clean if required) and adjust the slider / damper to produce the proper clean combustion.

1. Open the door using the door handle located on the right-hand side of the stove.
2. Lift the lever on burn pot to unlock the fire grate and remove it.
3. The agitator locks at the right; rotate the top of the agitator towards the back of the firebox to unlock it, slide it to the left, and lift it out of the burn pot liner.
4. Lift the burn pot liner out of the stove.
5. Lift the burn pot from the firebox by gently lifting it up at the front of the burn pot, then slide it out from around the air intake tube and the ignitor cartridge. The ignitor is spring loaded to help with removal and installation.
6. Remove any build up on the agitator (calcium build-ups are common when burning corn). Using a metal scrapper, remove material that has accumulated or is clogging the liner's holes. Then dispose of the scrapped ashes from the liner and from inside the burn-pot.
7. Place the burn-pot back into the stove, there are hooks at the front of the burn pot that sit in a mount in the firebox. Ensure that the air intake tube and the ignitor cartridge. are properly inserted into the burn pot.
8. Place the liner back into the burn-pot, making sure that the ignitor hole in the liner is aligned with the ignitor tube; push the liner up against the ignitor tube.
9. Slide the agitator back into place and turn rotate the top towards the front of the stove to lock it in.
10. Set the fire grate in place, it should sit level on the front and back of the burn pot liner. Lock it in with the lever on the burn pot.
11. Close the door

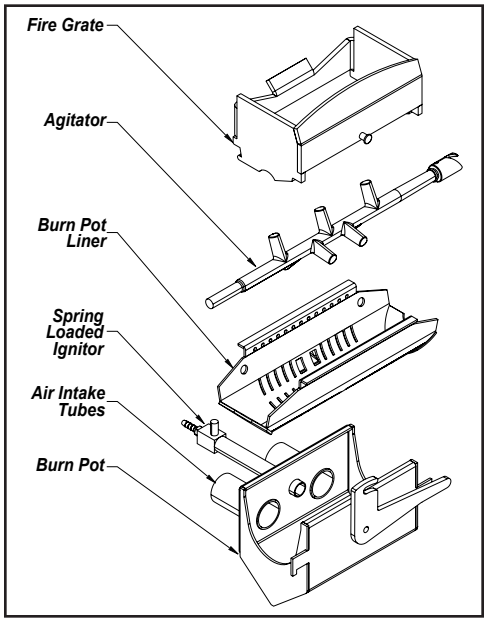

Figure 8: VF-55-FS Burn Pot Assembly.

Routine Cleaning and Maintenance

HEAT EXCHANGER TUBES (Weekly)

The exchanger tube scraper rod handle is located above the firebox door. Move the handle all the way in and out a few times (ONLY WHEN THE UNIT IS COLD) in order to clean away any fly ash that may have collected on the heat exchanger tubes. As different types of pellets produce different amounts of ash, cleaning of the tubes should be done on a regular basis to enable the unit to run efficiently.

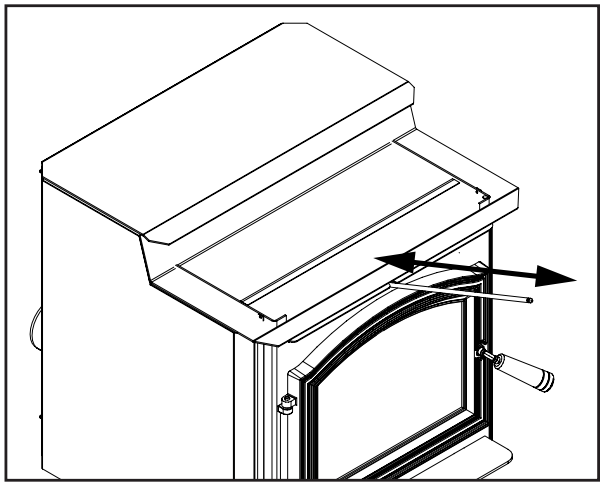

Figure 9: VF-55-FS Heat Exchanger Cleaning.

DOOR GLASS CLEANING (Weekly)

Cleaning of the glass must only be done when stove is cold. Open the door by lifting the handle. The glass can be cleaned by wiping down the outside and inside of the glass with a dry soft cloth.

If the glass has build up that can not be removed with only the cloth, clean the glass using paper towel and a gas appliance glass cleaner, this may be purchased through most dealers. If a gas appliance glass cleaner is not available, use a damp paper towel dipped in fly ash to clean the glass. After the glass has been cleaned use the dry soft cloth to wipe down the outside and inside of the glass.

ASH PAN AND DOOR GASKETS (Weekly)

After extended use the gasketing may come loose. To repair this, glue the gasketing on using high-temperature fiberglass gasket glue available from your local dealer. This is important to maintain an airtight assembly.

ASH BOX (Weekly)

IMPORTANT: The unit must be OFF while the ash pan is removed.

The ash box is located behind the lower door (see Figure 10). To remove the ash box, lift the latch on the right, open the ash box door, and lift it out.

Dump the ashes into a metal container stored away from combustibles. Monitor the ash level every week. Remember that different pellet fuels will have different ash contents. Ash content is a good indication of fuel efficiency and quality. Refer to "Safety Warnings And Recommendations" for disposal of ashes. Vacuum the inside of the ash pan compartment inside the pedestal including the hole at the top back of the compartment. Insert the ash box fully and close ash box door.

DO NOT PLACE UNBURNED OR RAW PELLET FUEL IN ASH PAN.

EXHAUST VENT (Biannually)

This vent should be cleaned every year or after two tons of pellets. We recommend contacting your dealer for professional cleaning. To clean the vent pipe, tap lightly on the pipe to dislodge any loose ash. Open the bottom of the "T" to dump the ash, then vacuum as much of the ash out of the vent pipe as possible.

FRESH AIR INTAKE (Biannually)

Inspect periodically to be sure that it is not clogged with any foreign materials.

Routine Cleaning and Maintenance

EXHAUST PASSAGES (Biannually)

1. Open the firebox door by lifting the handle.
2. Remove the burn pot assembly and clean all the parts.
3. Lubricate all screws with penetrating oil.
4. Lift the baffle, remove the firebox liner, and lift out the firebox lower. Vacuum the firebox and firebox liner thoroughly.
5. Open the ash box door; remove the ash box and cleanout the cavity.
6. Re-install the ash box, firebox lower, firebox liner, burn pot, and burn pot liner
7. Close the firebox and ash pan doors and secure.

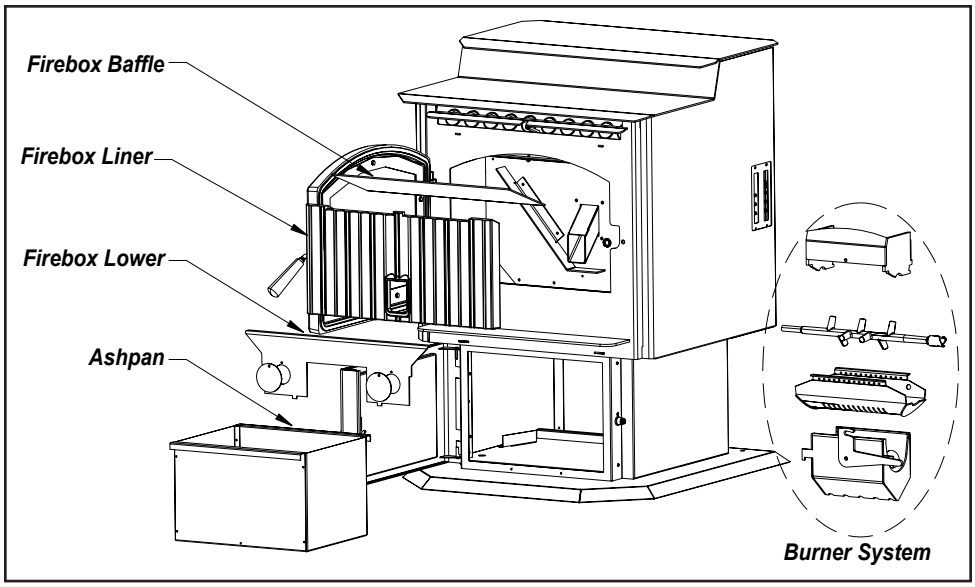

Figure 10: VF-55-FS Exhaust Passages.

BLOWER MECHANISMS (Annually)

Unplug the stove then open the right and left side panels to access the two blowers. Remove the two (2) 5/16 hex head screws from the upper & lower edge located on the front edge of the panel. Vacuum all dust from motors. The blower motors has sealed bearings, DO NOT lubricate this motor. Check gaskets and replace if needed.

POST SEASON CLEAN-UP

Once you are finished using the pellet appliance for the season, unplug the stove for added electrical protection. It is very important that the stove be cleaned and serviced as stated above.

CLEANING PAINTED SURFACES

Please clean painted surfaces with a soft damp cloth.

FIREBOX LINER

The paint on the Firebox Liner may peel. This is due to extreme conditions applied to the paint and is in no way covered by warranty.

DOOR GLASS REPLACEMENT

It is recommended that your dealer replace the glass if broken. The door glass is made of high temperature PYRO CERAMIC. To replace the glass, unscrew and remove the six (6) retainer nuts using a 5/16" socket. Remove the glass and any broken pieces. High temperature fiberglass tape should be used around the glass in the same location as the original fiberglass. Insert the glass into the retainer, screw the door to the retainer, and gently tighten nuts. The use of substitute materials is prohibited: #50-2025 Glass 14⅞" x 11⅜" (378mm x 289mm).

Warranty

Sherwood Industries Ltd. is the manufacturer of the Vista Flame line of heating products. At Sherwood Industries, our commitment to the highest level of quality and customer service is the most important thing we do. Each Vista Flame stove is built on a tradition of using only the finest materials and is backed by our Exclusive Lifetime Limited Warranty to the original purchaser. With Enviro, you're not just buying a stove, you're buying a company with years of unequalled performance and quality.

Limited Lifetime Warranty:
Under this warranty, Sherwood Industries Ltd. covers the fireplace or stove body and accessories against defects in materials and workmanship, for part repair or replacement for the first seven (7) years and limited labour for the first two (2) years to the original purchaser. This Warranty covers: Firebox, Heat Exchanger, Burn Pot, Firebox Panels, Ceramic Glass, Pedestals, Panels, Legs, Log Sets and Door Assembly. Please see the exclusions and limitation section below as certain restrictions and exclusions apply to this warranty.

Limited Three (3) Year Warranty
Under this warranty, Sherwood Industries Ltd. covers the Burn Pot Liner against defects in materials and workmanship, for part repair or replacement for the first three (3) years and limited labour for the first two (2) years to the original purchaser. Please see the exclusions and limitation section below as certain restrictions and exclusions apply to this warranty.

Limited Two (2) Year Warranty:
Under this warranty, Sherwood Industries Ltd. covers: Ignitor, Auger Motor, Circuit Board, Timers, Temp Sensors, Blowers, Vacuum Switch and Wire Harness, against defects in materials and workmanship, for part repair or replacement for the first two (2) years and limited labour for the first two (2) years to the original purchaser. Please see the exclusions and limitation section below as certain restrictions and exclusions apply to this warranty.

Limited One (1) Year Warranty:
Under this warranty, Sherwood Industries Ltd. covers all exterior surface finishes against defects in materials and workmanship, for part repair or replacement and limited labour for the first (1) year to the original purchaser. Please see the exclusions and limitation section below as certain restrictions and exclusions apply to this warranty.

Here is how our Warranty works
If you have any concerns with your Vista Flame product please contact the dealer where you purchased the fireplace or stove. Your dealer shall make all claims under this warranty in writing.

To the Dealer
When filling out a warranty claim please complete the following information on an official warranty claim form:

Customer information: Name, address and telephone number of purchaser and date of purchase.

Dealer information: Date of installation, name of installer and dealer, serial number of the appliance, nature of complaint, defects or malfunction, description and part numbers of any parts replaced.

To the Distributor
Sign and verify that work and information are correct.

Warranty

Exclusions and Limitations:

1. This Warranty does not cover tarnish, discoloration or wear on the plating or paint.
2. This Warranty excludes wear and tear or breakage caused by cleaning, moving or service on log set.
3. A qualified installer must install this stove or fireplace. This Limited Warranty covers defects in materials and workmanship only if the product has been installed in accordance with local building and fire codes; in their absence, refer to the owner's manual. If the product is damaged or broken as a result of any alteration, willful abuse, mishandling, accident, neglect, or misuse of the product, the Limited Warranty does not apply.
4. The stove must be operated and maintained at all times in accordance with the instructions in the Owner's Manual. If the unit shows signs of neglect or misuse, it is not covered under the terms of this Warranty policy. Performance problems due to operator error will not be covered by the Limited Warranty policy.
5. As this is a heating appliance some changes in colour of surface finishes may occur. This is not a flaw and as such is not covered under this warranty.
6. Some minor expansion, contraction, or movement of certain parts and resulting noise, is normal and not a defect and, therefore, is not covered under this Limited Warranty.
7. Misuse includes over-firing. Over-firing this appliance can cause serious damage and will nullify the Limited Warranty.
8. The Limited Warranty will cover glass thermal breakage only and will not cover misuse of the stove glass, including but not limited to glass that is struck, has surface contaminates or has had harsh or abrasive cleaners used on it.
9. This warranty does not cover products made or provided by other manufacturers and used in conjunction with the operation of this stove without prior authorization from Sherwood Industries Ltd. The use of such products may nullify the Limited Warranty on this stove. If unsure as to the extent of this Limited Warranty, contact your authorized Vista Flame dealer before installation.
10. Sherwood Industries Ltd. will not be responsible for inadequate performance caused by environmental conditions.
11. The Limited Warranty does not cover installation and operational related problems such as spillage caused by environmental conditions. Environmental conditions include but are not limited to nearby trees, buildings, roof tops, wind, hills, mountains, inadequate venting or ventilation, excessive offsets, negative air pressures or other influences caused by mechanical systems such as furnaces, fans, clothes dryers etc.
12. The Limited Warranty is void if:
    a) The stove has been operated in atmospheres contaminated by chlorine, fluorine or other damaging chemicals.
    b) The stove is subject to submersion in water or prolonged periods of dampness or condensation.
    c) Any damage to the unit, combustion chamber or other components due to water, or weather damage which is the result of, but not limited to, improper chimney/venting installation.
    c) Salt air in coastal areas or high humidity can be corrosive to the finish; these environments can cause rusting. Damage caused by salt air or high humidity is not covered by the Limited Warranty.
13. Exclusions to the Limited Warranty include: injury, loss of use, damage, failure to function due to accident, negligence, misuse, improper installation, alteration or adjustment of the manufacturer's settings of components, lack of proper and regular maintenance, alteration, or act of God.
14. The Limited Warranty does not cover damage caused to the fireplace or stove while in transit. If this occurs, do not operate the stove and contact your courier and/or dealer.
15. The Limited Warranty does not extend to or include firebox paint, door or glass gaskets with damage caused by normal wear and tear, or exterior paint discoloration or chipping, worn gaskets, etc.
16. The Limited Warranty does not include damage to the unit caused by abuse, improper installation, or modification of the unit.

Warranty

17. Damage to plated surfaces caused by fingerprints, scratches, melted items, or other external scores and residues left on the plated surfaces from the use of abrasive cleaners or polishes is not covered in this warranty.
18. The Limited Warranty does not cover tarnish, discoloration or wear on the plated surfaces.
19. The paint on the Metal Brick Liner may peel. This is due to the extreme conditions applied to the paint during normal usage. It is not a flaw and is not covered under warranty.
20. Sherwood Industries Ltd. is free of liability for any damages caused by the fireplace or stove, as well as inconvenience expenses and materials. The Limited Warranty does not cover incidental or consequential damages.
21. The Limited Warranty does not cover any loss or damage incurred by the use or removal of any component or apparatus to or from the Vista Flame fireplace or stove without the express written permission of Sherwood Industries Ltd. and bearing a Sherwood Industries Ltd. label of approval.
22. Any statement or representation of Vista Flame products and their performance contained in Vista Flame advertising, packaging literature, or printed material is not part of the Limited Warranty.
23. The Limited Warranty is automatically voided if the fireplace or stove's serial number has been removed or altered in any way. If the stove is used for commercial purposes, it is excluded from the Limited Warranty.
24. No dealer, distributor, or similar person has the authority to represent or warrant Vista Flame products beyond the terms contained within the Limited Warranty. Sherwood Industries Ltd. assumes no liability for such warranties or representations.
25. Sherwood Industries Ltd. will not cover the cost of the removal or re-installation of the stove, hearth, facing, mantels, venting or other components.
26. Labour to replace or repair items under this Limited Warranty will be covered per our warranty service fee reimbursement schedule. Labour rates are set per component and as such total labour costs may not be covered.
27. Sherwood Industries Ltd. is not liable for freight or labour on any stove replaced in-field and is not liable for travel costs for service work. In the event of in-home repair work, the customer will pay any in-home travel fees or service charges required by the Authorized Dealer.
28. At no time will Sherwood Industries Ltd. be liable for any consequential damages which exceed the purchase price of the unit. Sherwood Industries Ltd. has no obligation to enhance or modify any stove once manufactured (example: as a stove evolves, field modifications or upgrades will not be performed).
29. This Limited Warranty is applicable only to the original purchaser and it is non-transferable.
30. This warranty only covers Vista Flame products that are purchased through an authorized Vista Flame dealer.
31. If for any reason any section of the Limited Warranty is declared invalid, the balance of the warranty remains in effect and all other clauses shall remain in effect.
32. The Limited Warranty is the only warranty supplied by Sherwood Industries Ltd., the manufacturer of the stove. All other warranties, whether express or implied, are hereby expressly disclaimed and purchaser's recourse is expressly limited to the Limited Warranty.
33. Sherwood Industries Ltd. and its employees or representatives will not assume any damages, either directly or indirectly, caused by improper usage, operation, installation, servicing or maintenance of this stove.
34. Sherwood Industries Ltd. reserves the right to make changes without notice. Please complete and mail the warranty registration card and have the installer fill in the installation data sheet in the back of the manual for warranty and future reference.
35. Sherwood Industries Ltd. is responsible for stocking parts for a maximum of seven (7) years after discontinuing the manufacture or incorporation of the item into its products. An exception to this would be if an OEM supplier is not able to supply a part.

Installation Data Sheet

The following information must be recorded by the installer for warranty purposes and future reference.

NAME OF OWNER:

_____

ADDRESS:

_____

_____

_____

PHONE:_____

NAME OF DEALER:

_____

ADDRESS:

_____

_____

_____

PHONE:_____

MODEL:_____

SERIAL NUMBER:_____

DATE OF PURCHASE: _____ (dd/mm/yyyy)

DATE OF INSTALLATION:_____(dd/mm/yyyy)

MAGNEHELIC AT INSTALL:_____

INSTALLER'S SIGNATURE:

_____

NAME OF INSTALLER:

_____

ADDRESS:

_____

_____

_____

PHONE:_____

MANUFACTURED BY:
SHERWOOD INDUSTRIES LTD.
6782 OLDFIELD RD. SAANICHTON, BC, CANADA V8M 2A3
www.enviro.com
July 7, 2009
C-11976