SHERWOOD INDUSTRIES IS AN ENVIRONMENTALLY RESPONSIBLE COMPANY. THIS MANUAL IS PRINTED ON RECYCLED PAPER.

PLEASE KEEP THESE INSTRUCTIONS FOR FUTURE REFERENCE

DV48

BY: SHERWOOD INDUSTRIES LTD

Westgate

LUXURY FIREPLACES

OWNER'S MANUAL

INSTALLER:
Leave this manual with the appliance.

CONSUMER:
Retain this manual for future reference.



WHAT TO DO IF YOU SMELL GAS

- **Open windows/extinguish any open flame.**
- **Do not try to light any appliance.**
- **Do not touch any electrical switch or use any phone in your building.**
- **Immediately call your gas supplier from a neighbour's phone. Follow the gas supplier's instructions.**
- **If you cannot reach your gas supplier, call the fire department.**

FOR YOUR SAFETY: Do not store or use gasoline or other flammable vapours and liquids in the vicinity of this or any other appliance.

WARNING: If the information in this manual is not followed exactly, a fire or explosion may result causing property damage, personal injury or loss of life. Installation and service must be performed by a qualified installer, service agency or the gas supplier.

This appliance may be installed in an after-market permanently located, manufactured (mobile) home, where not prohibited by local codes.

This appliance is only for use with the type of gas indicated on the rating plate. This appliance is not convertible for use with other gases, unless a certified kit is used.

c US

Intertek

Massachusetts installations (Warning): This product must be installed by a licensed plumber or gas fitter when installed within the Commonwealth of Massachusetts. Other Massachusetts code requirements: Flexible connector must not be longer than 36in., a shut off valve must be installed; only direct vent sealed combustion products are approved for bedrooms/bathrooms. A carbon monoxide detector is required in all rooms containing gas fired direct vent appliances. The fireplace damper must be removed or welded in the open position prior to installation of a fireplace insert.

Safety Precautions

FOR SAFE INSTALLATION AND OPERATION OF YOUR "WESTGATE" HEATER, PLEASE CAREFULLY READ THE FOLLOWING INFORMATION:

- All Westgate gas-fired appliances must be installed in accordance with their instructions. Carefully read all the instructions in this manual first. Consult the building authority having jurisdiction to determine the need for a permit prior to commencing the installation.
- **NOTE:** Failure to follow these instructions could cause a malfunction of the fireplace, which could result in death, serious bodily injury, and/or property damage.
- Failure to follow these instructions may also void your fire insurance and/or warranty.

GENERAL

- Installation and repair should be done by a qualified service person. The appliance should be inspected before the first use and, at least, annually by a qualified service person. More frequent cleaning may be required due to excessive lint from carpeting, bedding material, etc. It is imperative the control compartments, burners and circulating air passageways of the appliance be kept clean.
- Due to high temperatures, the appliance should be located out of high traffic areas and away from furniture and draperies.

Children and adults should be alerted to the hazards of high surface temperatures and should stay away to avoid burn or clothing ignition.

- Young children should be carefully supervised when in the same room as the appliance. Toddlers, young children and others may be susceptible to accidental contact burns. A physical barrier is recommended if there are at risk individuals in the house. To restrict access to a fireplace or stove, install an adjustable safety gate to keep toddlers, young children and other at risk individuals out of the room and away from hot surfaces.
- Clothing or other flammable materials should not be placed on or near the appliance.

FOR YOUR SAFETY

- Installation and service must be performed by a qualified installer, service agency or gas supplier.
- This installation must conform to local codes or, in the absence of local codes, to the current CAN/CSA-B149.1 Natural Gas and Propane Installation Code (Canada) or National Fuel Gas Code ANSI Z223.1.2 (USA)
- To prevent injury, do not allow anyone who is unfamiliar with the stove to operate it.

- **To prevent injury, if the pilot or pilot and burners have gone out on their own, open the glass door and wait 5 minutes to air out before attempting to re-light the stove.**
- Always keep the area around these appliances clear of combustible material, gasoline and other flammable liquids and vapours.
- These appliances should not be used as a drying rack for clothing or for hanging Christmas stockings/decorations.
- Due to the paint curing on the stove, a faint odor and slight smoking will likely be noticed when the stove is first used. Open a window until the smoking stops.

Always connect this gas stove to a vent system and vent to the outside of the building envelope. Never vent to another room or inside the building. Make sure the specified vent pipe is used, properly sized and of adequate height to provide sufficient draft. Inspect the venting system annually for blockage and signs of deterioration.

WARNING: Failure to position the parts in accordance with the diagrams in this booklet, or failure to use only parts specifically approved with this appliance, may result in property damage or personal injury.

WARNING: Do not operate with the glass front removed, cracked or broken. Replacement of the glass should be done by a licensed or qualified service person.

- Never use solid fuels such as wood, paper, cardboard, coal, or any flammable liquids, etc., in this appliance.
- Do not use this heater if any part has been under water. Immediately call a qualified service technician to inspect the heater and to replace any part of the control or gas control systems that have been under water.
- Do not abuse the glass by striking it or slamming the door shut.



Table of Contents

Safety Precautions....2
Table of Contents....3
Codes And Approvals....4
Specifications....5
- Dimensions....5
- Rating Label 6
- Door Removal and Installation....7

Installation Set-Up....7
- Firebox Liner Installation....7
- Log Burner / Ember Bed Installation....9
- Log Set Installation....10
- Glass Burner Installation....12
- Porcelain Panel Kit Installation....14
- Optional Front Installation....16

Start-Up & Operation....18
- Normal Sounds During Operation....18
- Remote Control Operations....18
- Technical Data....18
- System Description....18
- Wall Mounting The Receiver....20
- Operating Procedure....20
- Air Shutter Adjustment....23
- Check for Proper Burner Flame....24

Service / Maintenance....25
- Lighting Instruction Label....25
- Air Intake....25
- Light Bulb Replacement....26
- Cleaning / Annual Service....26
- Cleaning The Glass....26
- Replacing Glass....26
- Burner & Firebox Cleaning....26

Warranty....27
Installation Data Sheet....29

Codes And Approvals

DIRECT VENT ONLY: This type is identified by the prefix DV. This appliance draws all of its air for combustion from outside the dwelling, through a specially designed vent pipe system.

This appliance has been tested and approved for installations from 0 feet to 4500 feet (1372 m) above sea level.

In the USA: The appliance may be installed at higher altitudes. Please refer to your American Gas Association guidelines which state: the sea level rated input of Gas Designed Appliances installed at elevations above 2000 (610 m) feet is to be reduced 4% for each 1000 feet (305 m) above sea level. Refer also to National Fuel Gas Code, ANSI Z223.1/ NFPA 54, local authorities, or codes which have jurisdiction in your area regarding the de-rate guidelines.

In Canada: When the appliance is installed at elevations above 4500 feet (1372 m), the certified high altitude rating shall be reduced at the rate of 4% for each additional 1000 feet (305 m). Refer also to CSA-B149.1 Natural Gas and Propane Installation Code, local authorities, or codes which have jurisdiction in your area regarding the de-rate guidelines.

- This appliance has been tested by INTERTEK TESTING SERVICES NA LTD. and found to comply with the established VENTED GAS FIREPLACE HEATER standards in CANADA and the USA as follows:

VENTED GAS FIREPLACE HEATER (DV48; NG/LPG)

TESTED TO: ANSI Z21.88a-2007/CSA 2.33a-2007 VENTED GAS FIREPLACE HEATERS

CAN/CGA 2.17-M91 GAS FIRED APPLIANCES FOR HIGH ALTITUDES

CSA P.4.1-02 TESTING METHOD FOR MEASURING ANNUAL FIREPLACE EFFICIENCY

This Westgate DV48 Fireplace:

- Has been certified for use with either natural or propane gases. (See rating label.)
- Is not for use with solid fuels.
- Is approved for bedroom or bed sitting room. (**IN CANADA**: must be installed with a listed wall thermostat. **IN USA**: see current ANSI Z223.1 for installation instructions.)
- Must be installed in accordance with local codes. If none exist, use current installation code CAN/CSA-B149.1 Natural Gas and Propane Installation Code (Canada in Canada or ANSI Z223.1/NFPA 54 in the USA.
- Must be properly connected to an approved venting system and not connected to a chimney flue serving a separate solid-fuel burning appliance.
- The flow of combustion and ventilation air not be obstructed.

IMPORTANT NOTICE (Regarding first fire up): When the unit is turned on for the first time, it should be turned onto high without the fan on for the first 4 hours. This will cure the paint, logs, gasket material and other products used in the manufacturing process. It is advisable to open a window or door, as the unit will start to smoke and can irritate some people. After the unit has gone through the first burn, turn the unit off including the pilot, let the unit get cold then remove the glass door and clean it with a good gas fireplace glass cleaner, available at your local WESTGATE dealer.

NATIONAL FIREPLACE INSTITUTE®

NFI

CERTIFIED

www.nficertified.org

We recommend that our gas hearth products be installed and serviced by professionals who are certified in the U.S. by the National Fireplace Institute® (NFI) as NFI Gas Specialists.

Specifications

Dimensions:

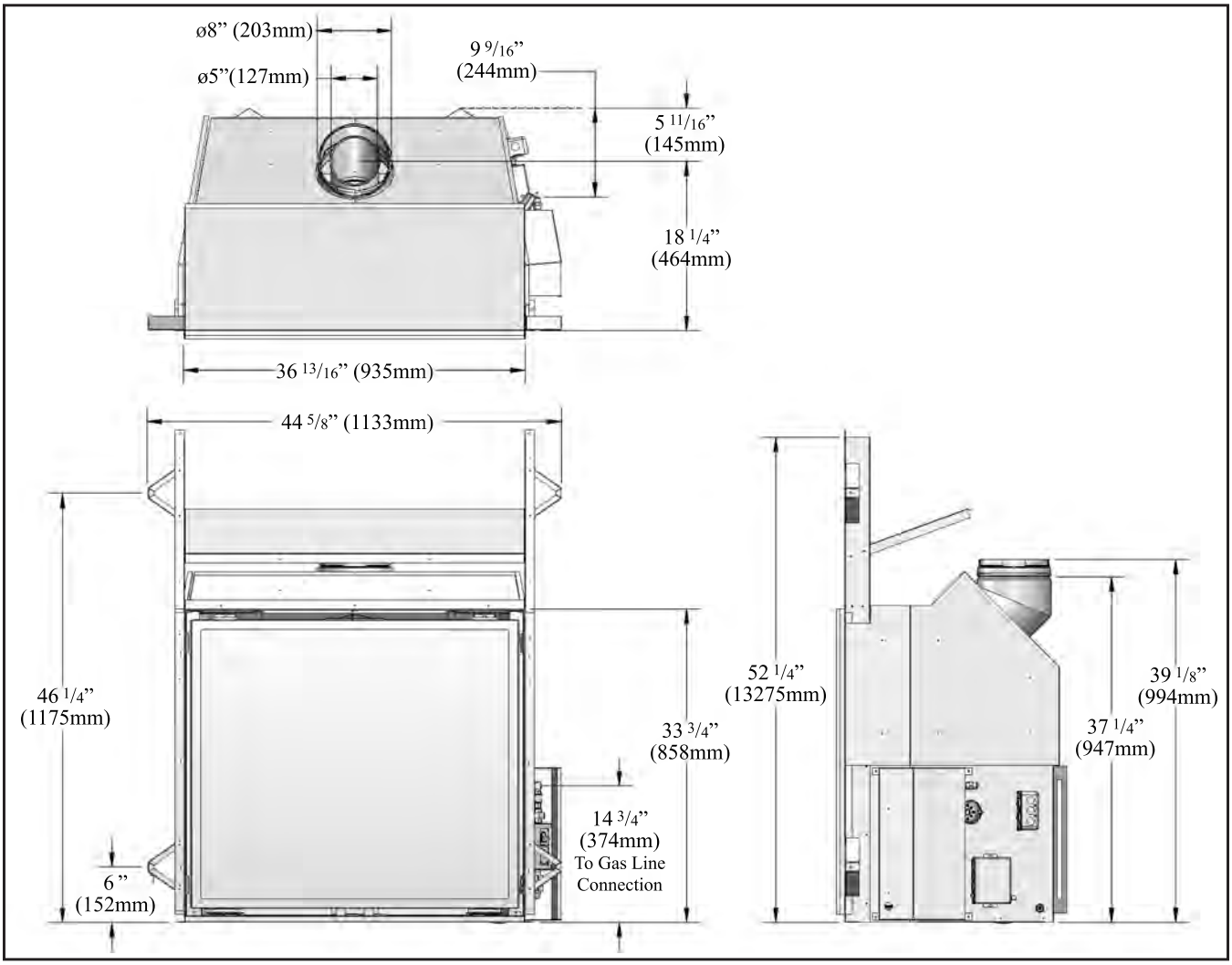

Figure 1. Dimensions of the Firebox.

Rating Label Location:

The Rating and Lighting instruction label is located below the door frame, underneath the firebox attached to a chain. To access the label, slide the plate forward out from under the firebox. Always return it when finished.

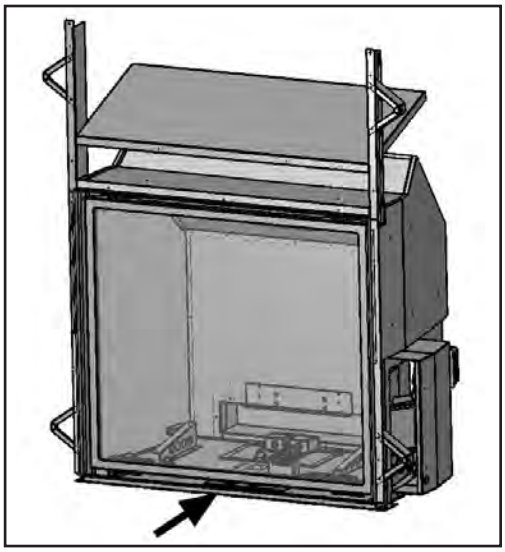

Figure 2. Rating/Lighting Label Location.

SPECIFICATIONS

RATING LABEL:

DO NOT REMOVE THIS LABEL / N'ENLEVEZ PAS CETTE ETIQUETTE

WH- **DV48**

C US Intertek

VENTED GAS FIREPLACE HEATER ENVIRO MODEL:
FOYER AU GAZ A EVACUATION MODELE ENVIRO: DV48

NAT: (Gaz naturel) ☐ LPG (Propane) ☐

Certified for use in Canada & USA
Certifié pour installation au Canada et aux Etats-Unis

TESTED TO / TESTÉE SELON LES NORMES:
ANSI Z21.88a-2007/CSA 2.33a-2007 VENTED GAS FIREPLACE HEATERS / FOYER AU GAZ EVACUATION; CAN/CGA 2.17-M91 GAS FIRED APPLIANCES FOR HIGH ALTITUDES / LES APPAREILS BRULANT GAZ POUR UTILISATION EN HAUTES ALTITUDES; Can/CSA P.4.1-02 (R2006) TESTING METHOD FOR MEASURING ANNUAL FIREPLACE EFFICIENCY / LA METHODE D'ESSAI POUR MESURER L'EFFICACITE DE CHEMINEE ANNUELLE.

INPUT (ENTRÉE): NAT: 0-4500 FT (1372 M) MAX: 48,000 BTU (14.07 KW•h)
MIN: 16,000 BTU (4.68 KW•h)
LPG: 0-4500 FT (1372 M) MAX: 48,000 BTU (14.07 KW•h)
MIN: 17,000 BTU (4.98 KW•h)

MANIFOLD PRESSURE (PRESSION D'ADMISSION):
NAT: 3.5 in. WC (0.87kPa) / 1.6 in. WC (0.40kPa) LPG: 10 in. WC (2.48kPa) / 6.4 in. WC (1.59kPa)

MINIMUM GAS SUPPLY PRESSURE: (PRESSION MINIMALE D'ALIMENTATION DE GAZ PERMISE)
NAT: 5 in. Wc (1.24kPa) LPG: 12 in. Wc (2.98kPa)

ORIFICE SIZE: (DIMENSIONS DE L'ORIFICE)
NAT: Left # 45 DMS, Right # 41 DMS LPG: Left # 55 DMS, Right # 53 DMS

PILOT ORIFICE SIZE: (DIMENSIONS DE PILOTER L'ORIFICE)
NAT: # 62 DMS LPG: Left # 35 DMS

ELECTRICAL RATING:(EXIGENCES ÉLECTRIQUES)
Fan type circulator (Ventilateur circulaire) : 120 volts AC 60 hz / Less than 7 Amperes

CLEARANCES TO COMBUSTIBLES: (DISTANCE OBLIGATOIRE DES COMBUSTIBLES)
Stove side (Côté de poêle): 4 inches (10.2cm), Back (Arriére): 4 inches (10.2cm), Ceiling from bottom of unit (Du fond d'unité au Plafond): 80" inches (203.2cm), From fireplace frame to side wall (Du frome de la cheminée au mur latéral): 10" (25.5 cm), From base of the unit to shelf, header, or 12" (30.5cm) mantel (De la base de l'unité à une étagère, un en-tête, ou un 12" manteau de cheminée): 52.25" (133cm)

VENT PIPE CLEARANCES:(ESPACES LIBRES DE VENTILATION) See manufacturer's listing, label and installation instructions. Verifeez l'identifaction, l'etiquette et les instructionsd'installation du fabricant. This appliance must be properly connected to a venting system in accordance with the manufacturer's installation instructions. Cet appareil doit être convenablement connecté à un système donner vent conformément aux instructions d'installation du fabricant.

VENTED GAS FIREPLACE HEATER - NOT FOR USE WITH SOLID FUELS. MAY BE INSTALLED IN BEDROOM OR BEDSITTING ROOM (IN CANADA with a listed wall thermostat). THIS APPLIANCE MUST BE PROPERLY CONNECTED TO A VENTING SYSTEM. ONLY FOR DIRECT DISCHARGE WITHOUT DUCT CONNECTION. This appliance must be installed as per manufacturers installation instructions and in accordance with local codes if any. If none exist, use current installation code CAN/CSA B149.1 in Canada or ANSI Z223.1/NFPA 54 in the USA. This vented gas fireplace is not for use with air filters. FOR USE WITH GLASS DOORS CERTIFIED WITH THE APPLIANCE ONLY. This appliance is only for use with the type(s) of gas indicated on the rating plate. A conversion kit is available for this appliance. This appliance is not convertible for use with other gases, unless a certified kit is used. Sections of the venting system have not been installed. WARNING: Do not operate the appliance until all sections have been assembled and installed in accordance with the manufacturers instructions.

FOYER AU GAZ A EVACUATION - NE PAS EMPLOYER AVEC DES COMBUSTIBLES SOLIDES. Cet appareil peut être installé dans une chambre à coucher ou un studio. Cet appareil doit être branché correctement à un système de conduits. Uniquement pour l'échappement direct sans raccord de conduit.Cet appareil doit être installé selon les directives d'installation du manufacturier et selon les codes locaux, s'il y a lieu. Autrement, employez le code d'installation en vigueur au Canada CAN/CSA B149.1. Ne pas utilliser de filtre a air avec ce foyer au gaz a evacuation. POUR L'USAGE AVEC PORTES VITREES A CERTIFIE AVEC L'APPAREIL SEULEMENT. Cet apperareil doit etre utilise uniquement avec le type de gaz indique sur la plaque. Cet appareil ne peut etre converti a d'autres gaz sauf si une trouse de conversion certifee est utilisee. ADVERTISSEMENT: Ne pas utiliser l'appareil tant que toutes les sections n'ont pas ete assemblees et installees selon les instructions du fabricant.

MOBILE HOME: May be installed in an aftermarket, permanently located, manufactured home (USA only) or mobile home, where not prohibited by local codes. See owner's manual for details. This appliance must be installed in accordance with the current Standard for Mobile Homes, CAN/CSA Z240, or the Manufactured Home Construction and Safety Standard, Title 24 CFR, Part 3280, or when such standard is not applicable, the current Standard for Fire Safety Criteria for Manufactured Home Installations, sites, and Communitties, ANSI/NFPA 501A.

LA MAISON MOBILE : Peut être installé dans une maison mobile. Cet appareil doit être installé conformement aux Normes actuelles pour Maisons Mobiles, le BOITE/CSA Z240, ou les Normes de Construction et de Sureté des Maisons Pré-fabriquées (Titre 24 CFR, la Partie 3280). Quand ces Normes ne sont pas en vigueur, il faut suivre les criteres pour la sureté (contre les increndies) et pour la construction des Maisons Pré-fabriquées, leurs sites, ANSI/NFPA 501A, et des communautées aux Instructions du manufacturier.

MANUFACTURED BY (FABRIQUE PAR) : SHERWOOD INDUSTRIES LTD. 6782 OLDFIELD RD. SAANICHTON, BC, CANADA

CAUTION: Hot while in operation. Do not touch. Keep children, clothing, furniture, or gasoline and other liquids having flammable vapours away. ATTENTION: Très chaud quand allumé. Ne touchez pas, les brûlures sévères peuvent resulter. Tenez loin des enfants, des vêtements, des meubles, de l'essence ou d'autres fluides produisant des vapeurs inflammables.

DATE OF MANUFACTURE: DATE DE FABRICATION:

J	F	M	A	M	J	J	A	S	O	N	D	2009	2010	2011	2012

Figure 3. Rating Label.

Installation Set-Up

Door Removal and Installation:

1) The fireplace door is hung on two (2) hooks on the top of the firebox. The two (2) door latches at the bottom of the firebox hook over the tabs on the bottom of the door frame.

2) Lower the door latch tool underneath the door frame. Catch the lower door latch with the door latch tool (see Figure 5) and pull it out slightly, then down. Once the lower door latch clears the tab on the bottom of the door frame, release it inwards and then remove the door latch tool. Refer to Figures 6 & 7.

3) Pull the Door Frame at the bottom forward about 2" (5cm), then lift the Door Frame upwards to clear the Upper Door Hooks. Refer to Figures 7 & 8.

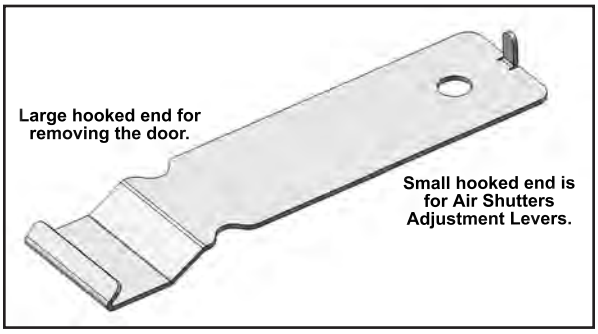

Figure 4: Door Latch /Air Adjustment Tool.

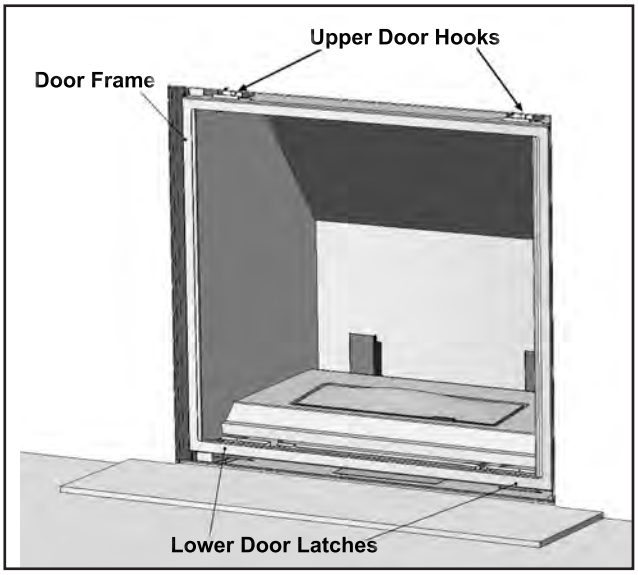

Figure 5: Door Latch Locations.

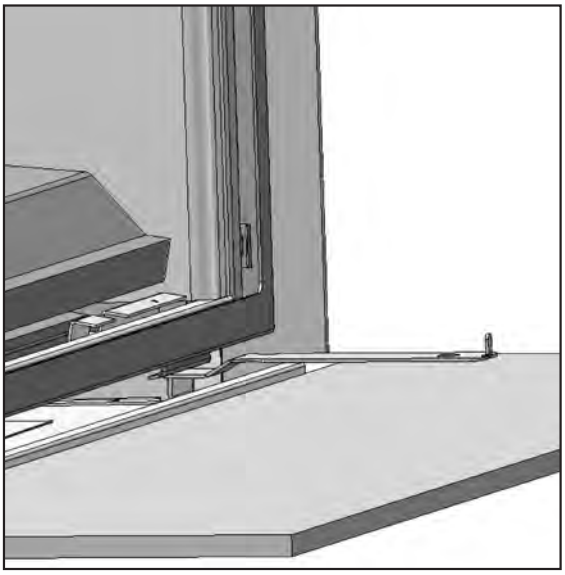

Figure 6: Door Latch Tool in Place.

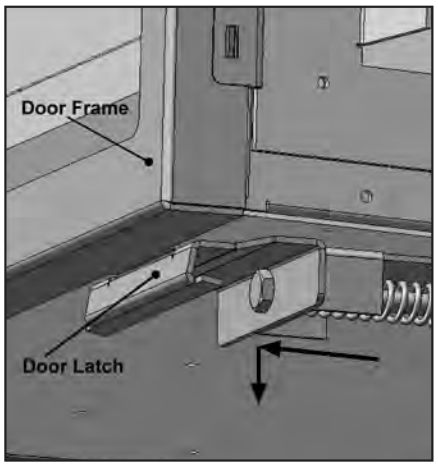

Figure 48: Door Latch Locations.

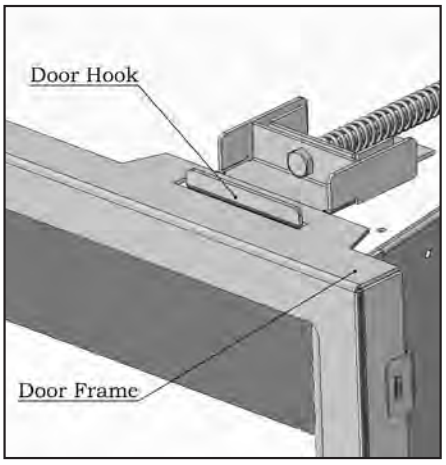

Figure 49: Top Door Hook.

4) Lift the Door Frame away, being careful that the glass panel is secure within the Door Frame.

Firebox Liner Installation:

IMPORTANT: The paint on the panels may fade for the first 8-10 hours of burn time, but will come back to its color after the paint has curred. The paint is very delicate and handing them with care is nessesary not to mark or smuge the paint.

Installation Set-Up

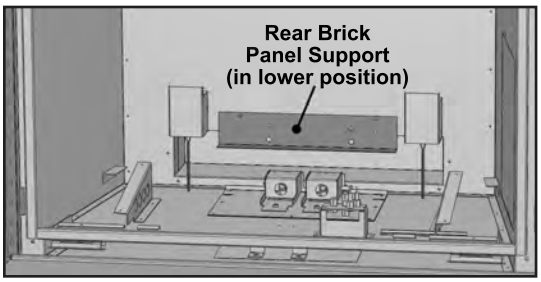

Figure 9: Rear Brick Panel Support.

1. Prior to installing the firebox liners, you will need to ensure the Rear Brick Panel Support is in the correct position. The support is located at the back of the firebox (see Figure 9) and can be installed in two (2) positions. The upper position (using the lower screw holes) is for the October Panels. The lower position (using the upper screw holes) is for the Sandstone, Ledgestone, and Porcelain Panels. Remove the Support, if necessary, and move it to the appropriate placement.



Figure 10: Rear Firebox Liner Panel in Place.

2. Ensure the light covers provided with your kit are installed on the Light Cover Bases at the rear of the firebox. The tabs on the back of the Light Cover slide down behind the light cover base. Refer to Figures 44 and 45.
3. Install the Rear Firebox Liner. This panel fits around the accent lights and rests on top of the Rear Brick Panel Support. It will stay in this location as you install the remaining panels. Refer to Figure 10.
4. Install the Left Firebox Liner Panel; it sits on the bottom front edge of the firebox (see Figure 11 & 12), a support bracket at the lower rear of the firebox, and is held in by a retainer at the top of the firebox. Adjust the panel retainers as required.

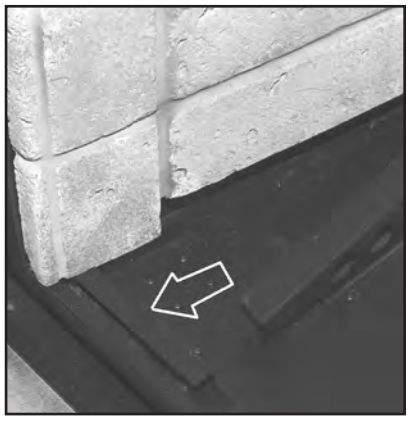

Figure 11: Left Firebox Liner Panel on Front Edge of Firebox.

5. Install the Top Panel by placing it on top of the Rear Panel and behind the Left Panel (see Figure 13). Hold it with one hand or have someone else hold it for you while you place the last panel. WARNING: If this panel falls from this location it will possibly break or the paint work will become chipped.

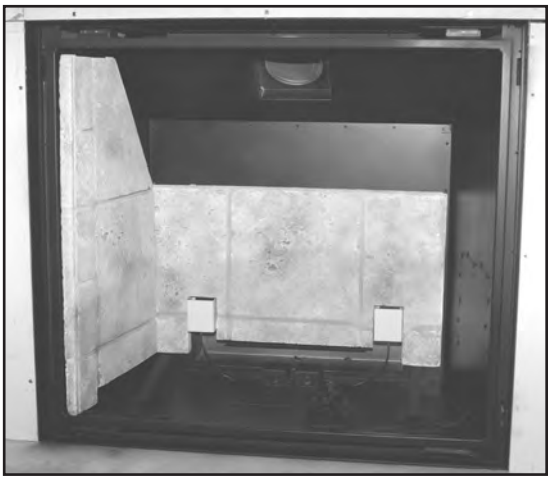

Figure 12: Left Firebox Liner Panel in Place.

6. Place the Right Firebox Liner Panel in the same manner used for the Left Panel (see Figure 14). The vertical edges of the left and right panels should line up with the front edges of the firebox sides. The side panels rest up against the back panel and hold the top panel in position.



Figure 13: Top Firebox Liner Panel in Place.



Figure 14: Right Firebox Liner Panel in Place.

LOG BURNER / EMBER BED INSTALLATION:

1. Use the two (2) T-20 screws provided; install the rear burner shield onto the back of the burner. The mounting holes are just above the mixing tubes at the rear of the burner, refer to Figure 15.

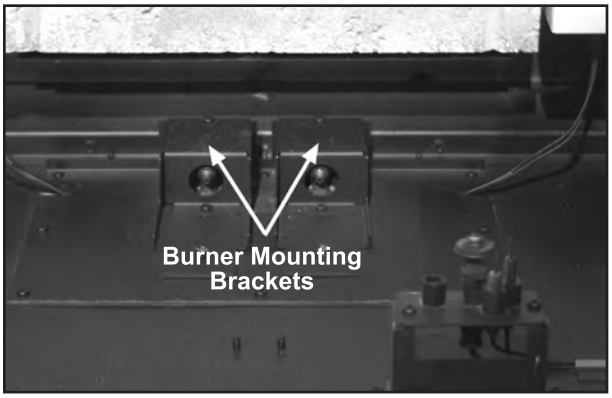

Figure 16: Burner Mounting Brackets.

2. In the bottom rear of the firebox there are two (2) gas orifices in a housing that facilitate the air shutter mechanisms and the Burner Mounting Brackets are above them (See Figure 16). There are two (2) mixing tubes underneath the back of the burner (see Figure 15). Lift the burner into the firebox with the back of the burner tilted downward. Keep the burner high enough at the front to clear the pilot assembly. Line up the mixing tubes with the holes in the burner mounting brackets and slowly lower the front of the burner over the pilot assembly (see Figure 17).



Figure 19: Burner Accents Pieces in Place.

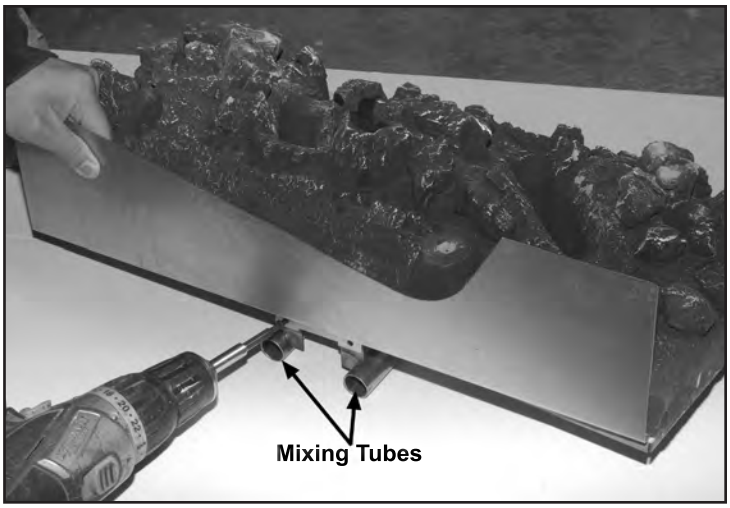

Figure 15: Installing Rear Burner Shield.

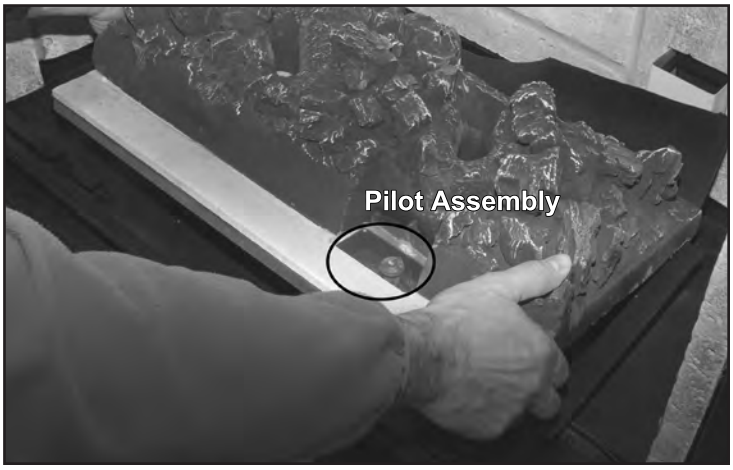

Figure 17: Log Burner Over Pilot Assembly.

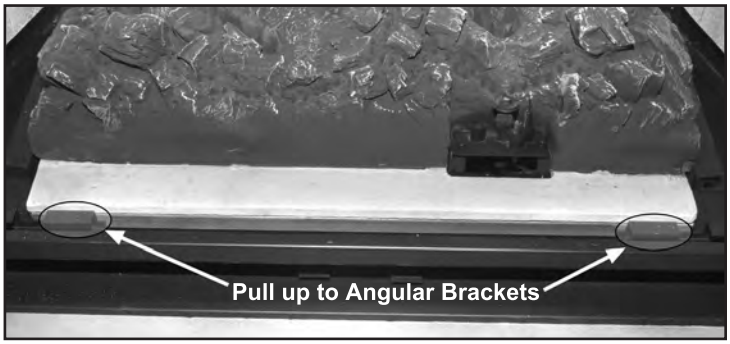

Figure 18: Log Burner in Place.

3. Pull the burner forward up to the angular brackets near the front of the firebox (see Figure 18).

   IMPORTANT: If the burner is not far enough back to lower the burner behind these brackets, then the mixing tubes are not engaged in the air shutter. Failing to ensure the mixing tubes are located in the mixing tube support brackets may cause serious performance and or safety issues.

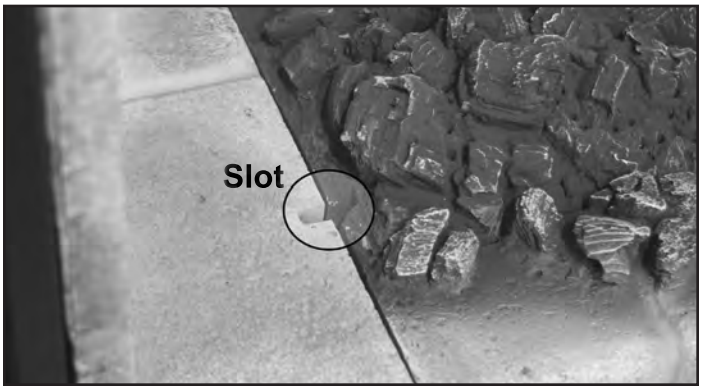

Figure 20: Slot for Firebox Grate.

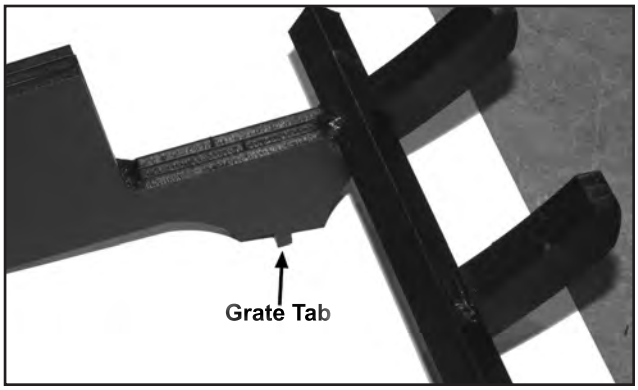

Figure 21: Tab on Firebox Grate.

4. Install the burner accent pieces as shown in Figure 19. There are a left, a right and a front ceramic trim. On each side of the burner and on the inside of each burner side accent pieces there is a slot, which should be aligned in order to position the log grate correctly (see Figure 18).
5. The firebox grate has two (2) tabs that run below the feet of the grate (see Figure 21), place the grate over the burner top and carefully inserting the grate tabs into the slots on the burner (see Figure 20 & 22). Once the grate is installed correctly, the burner, grate, and side burner accents will be all locked together.

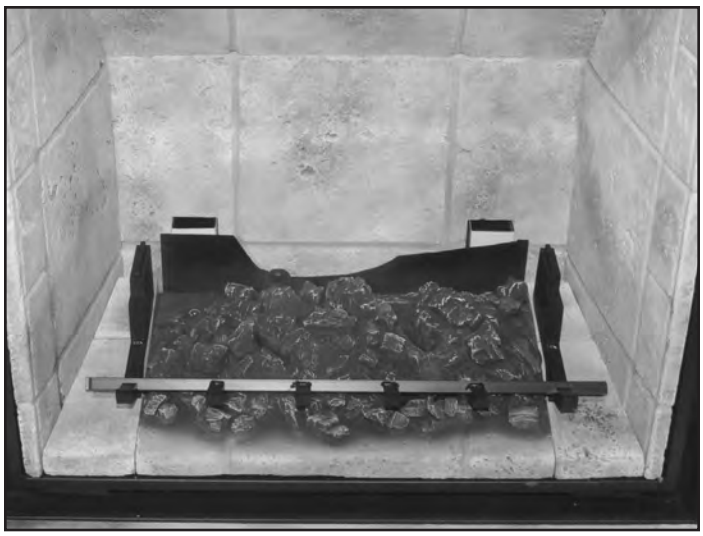

Figure 22: Firebox Grate in Place.

LOG SET INSTALLATION:

IMPORTANT: The paint on the logs may fade for the first 8-10 hours of burn time, but will come back to its color after the paint has curred. The paint is very delicate and handing them with care is nessesary not to mark or smuge the paint.

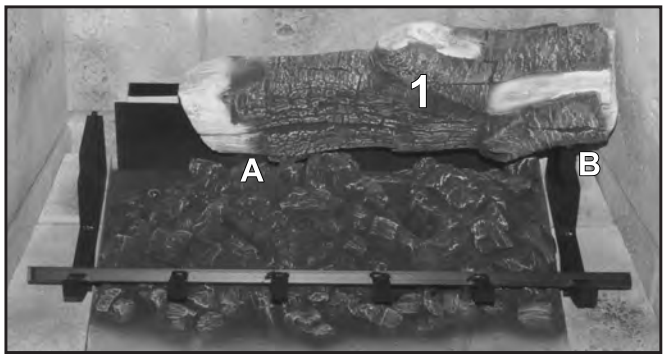

Figure 23: Log 1 in Place.

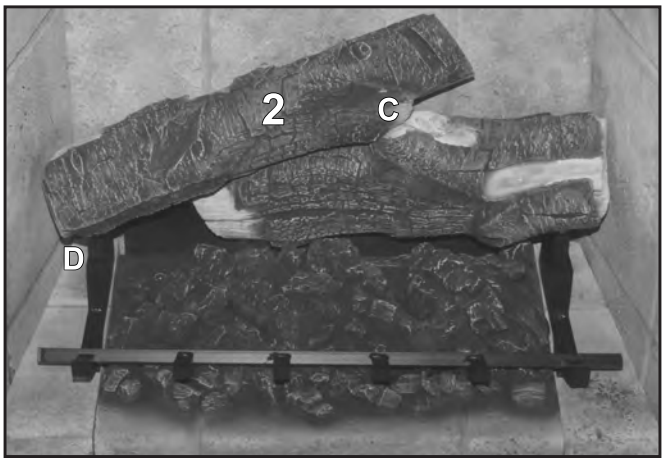

Figure 24: Log 2 in Place.

1. Install Right Rear Log. The right side sits on the grate with the groove on the bottom of the log fitting onto the top of the grate (see Figure 23). Insert the log pin into the top of the ember burner (see A in Figure 23). Align the log front edge with the front section of the grate (see B in Figure 23).

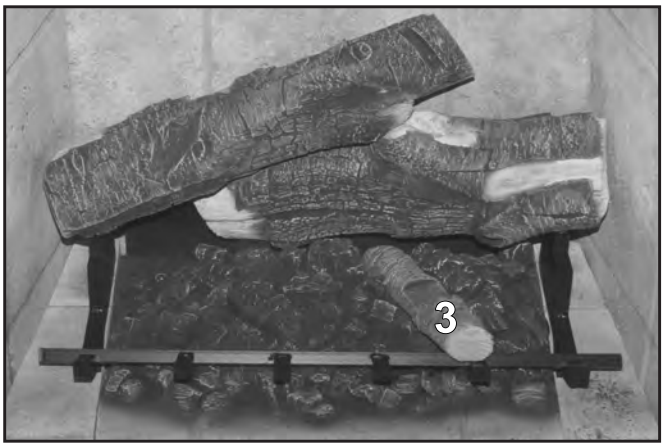

Figure 25: Log 3 in Place.

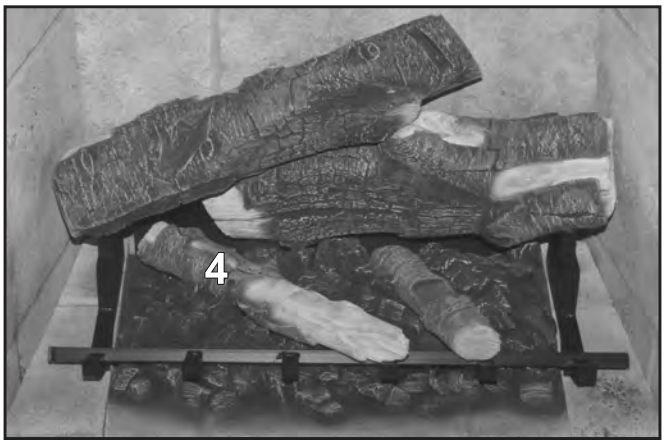

Figure 26: Log 4 in Place.



Figure 27: Log 5 in Place.

2. Install Left Rear log with the right side on the grate, using a groove on the bottom of the log to index itself to the grate (see Figure 24). The right side self locates on the first log. Alignment notches are provided for locating the centre area (see C in Figure 24). Align the front edge of the log with the upright section of the log grate (see D in Figure 24).
3. Insert Log 3 into the groove on the burner top. The groove has a stop at the rear to position the log properly from front to back. Refer to Figure 25.
4. Log 4 sits in a groove molded into the top of the burner top. See the details in Figure 26 showing the indexing key on this log.
5. Install Log 5 with the right side resting on the grate and the right side right up against the right hand firebox liner. The left side sits on a flat section in Log 3. Refer to Figure 27.

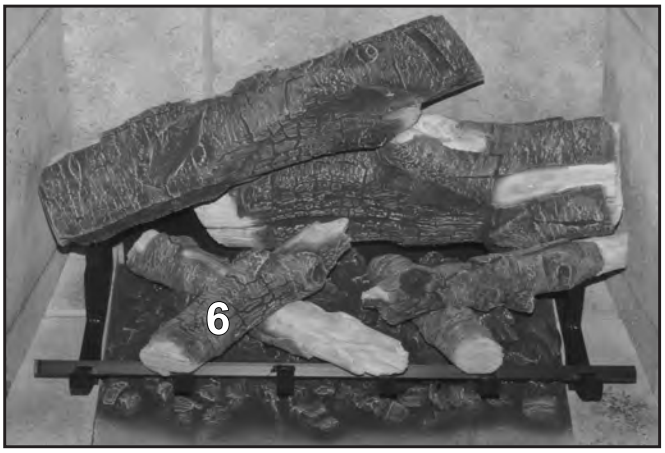

Figure 28: Log 6 in Place.

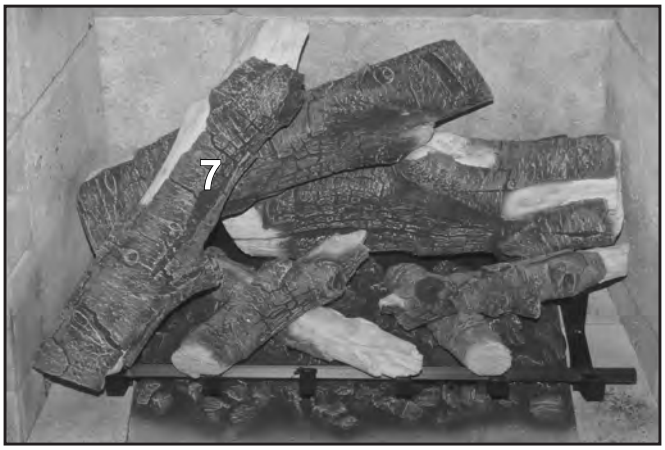

Figure 29: Log 7 in Place.

6. Install Log 6 by resting it across the flat section of Log 5 and locating the front edge across the grate finger as shown in Figure 28.
7. Log 7 sits in between the left panel and the left grate finger and cross the bar of the grate (see Figure 29). There is a notch across Log 2, which this log will locate into. The edge along the back of this log will index into the notch of Log 2.

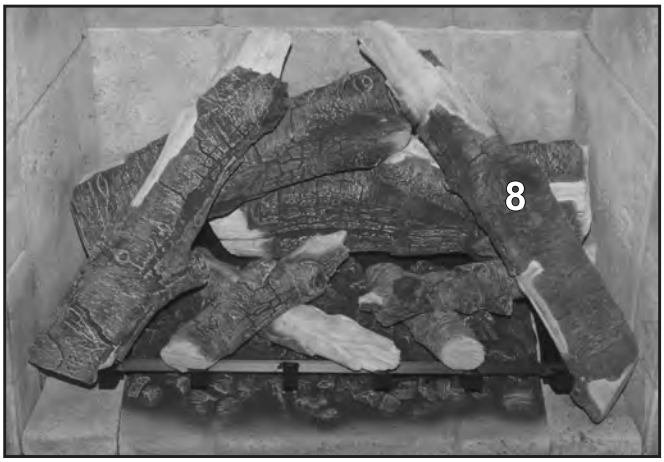

Figure 30: Log 8 in Place.

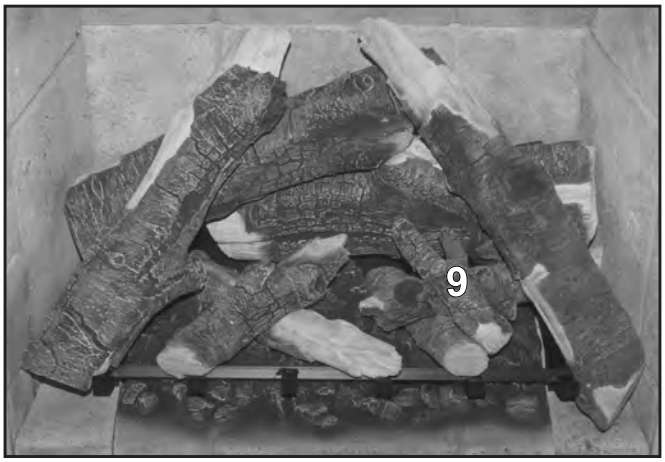

Figure 31: Log 9 in Place.

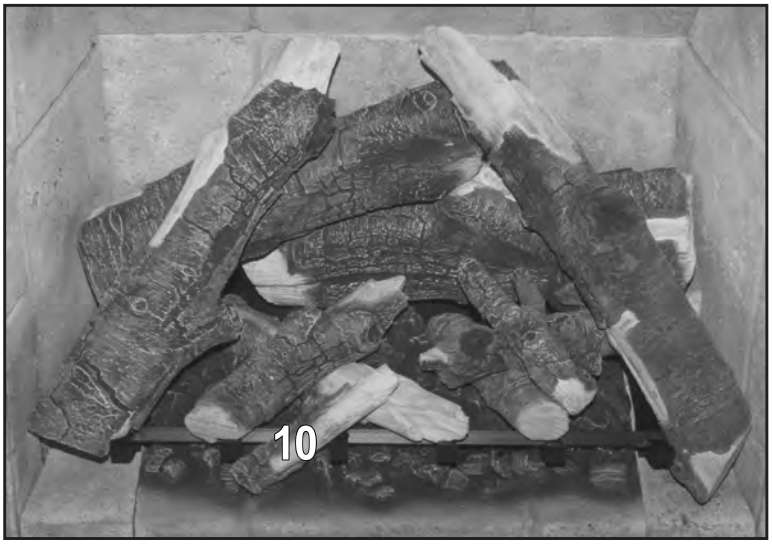

Figure 32: Accent Twig in Place.

8. Situate Log 8 between the right grate finger, the right firebox liner and the grate cross bar (see Figure 30). On the back of the log near the top end is a ceramic pin, this pin sits into a groove on the top of Log 2.
9. Sit the Y shaped Log 9 across Log 4 and 5 as shown in Figure 31.
10. The final little Accent Twig sits on the front ceramic burner accent and the grate finger as shown in Figure 32.

NOTE: Variances in gas quality or log placement may cause some discoloration of the log set to occur.

GLASS BURNER INSTALLATION:

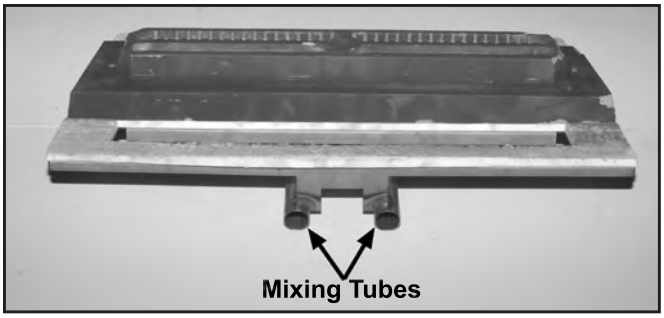

Figure 33: Mixing Tubes in Glass Burner.



Figure 34: Placing Glass Burner.

1. In the bottom rear of the firebox there are two (2) gas orifices in a housing that facilitate the air shutter mechanisms and the Burner Mounting Brackets are above them (See Figure 16). There are two (2) mixing tubes underneath the back of the burner (see Figure 33). Lift the burner into the firebox with the back of the burner tilted downward. Keep the burner high enough at the front to clear the pilot assembly. Line up the mixing tubes with the holes in the burner mounting brackets and slowly lower the front of the burner over the pilot assembly (see Figure 34).

2. Pull the burner forward up to the angular brackets near the front of the firebox (see Figure 35). The burner rests on the floor of the firebox and is properly aligned against the two (2) front burner rests.

   IMPORTANT: If the burner is not far enough back to lower the burner behind these brackets, then the mixing tubes are not engaged in the air shutter. Failing to ensure the mixing tubes are located in the mixing tube support brackets may cause serious performance and or safety issues.

3. Place the glass tray over top of the burner top as shown in Figure 36. It simply rests over the top section of the burner.

4. In front of the pilot assembly, on the front edge of the burner is one burner port which helps in the lighting of the main burner (see Figure 35). The glass tray has one hole in the same position that allows the gas to flow to this location. Ensure the glass tray hole is properly positioned over the port in the burner.

5. The DV48 glass burner option is supplied with two (2) quantities of glass, black and white. There is enough of either to fill the burner, so you can decide whether to install all white, all black, or some type of mixture (example in Figure 37). Fill the glass burner tray to the top. Try to keep glass from falling in around the pilot assembly.

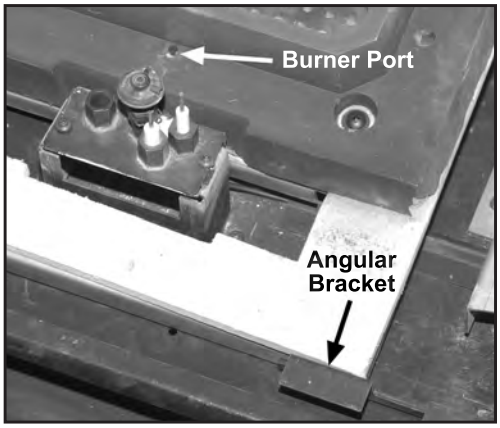

Figure 35: Glass Burner in Place.

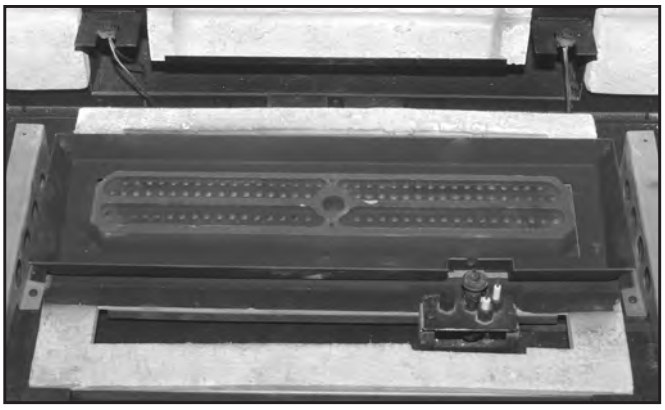

Figure 36: Glass Tray over Burner.

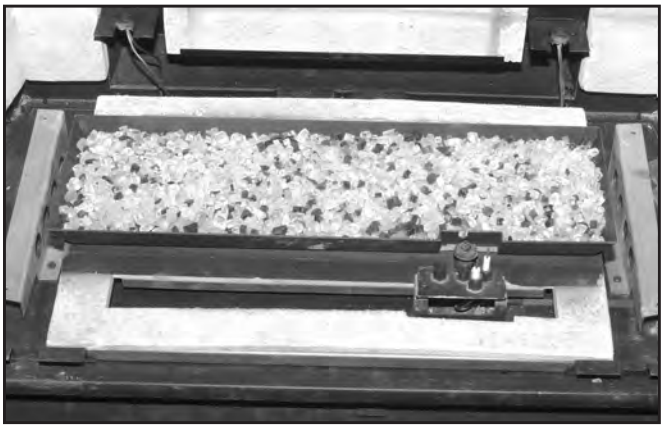

Figure 37: Glass Tray with Mixed Glass.



Figure 38: Burner Trim Being Placed.



Figure 39: Burner Trim in Correct Position.



Figure 40: Proper Gap Between The Glass Tray And The Burner Trim.

6. Gently place the burner trim piece around the burner (see Figure 38). It sits on various support brackets and fits around the burner tray and up against the firebox liner. Figure 39 shows the burner trim in the correct position. Ensure a minimum ⅜" (8mm) gap is maintained around the burner glass tray (see Figure 43).

7. If the optional rock accent kit was purchased for the DV48, you can place the rocks in a random pattern around the glass tray. A few can straddle the ⅜" (8mm) gap around the glass tray. Try to keep them looking randomly placed. Keep from placing them in large piles as they need to be evenly distributed. Examples are shown in Figure 41 & 42.

   It is important that rock accents are not placed in front or over the pilot assembly. This may prevent the burner from lighting in a timely fashion or overheat the pilot assembly. Keep an area of about 3" (75mm) in front of the pilot light free from obstruction and rock accents (see Figure 41).

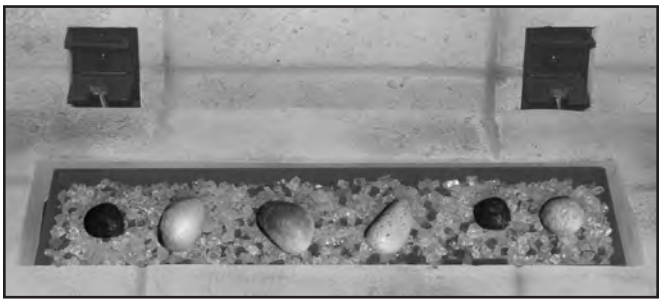

Figure 41: Example of Rock Placement - Single Kit.



Figure 42: Example of Rock Placement - Multiple Kits.

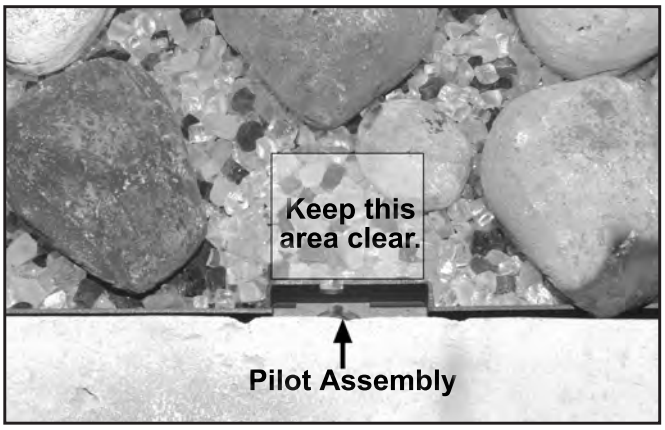

Figure 43: Keep Area in Front of Pilot Assembly Clear.

PORCELAIN PANEL KIT INSTALLATION:

1. Install the porcelain Light Covers over the Light Cover Base. The tabs on the back of the Light Cover slide down behind the Light Cover Base. Refer to Figures 44 & 45.

2. Ensure the Rear Brick Panel Support is in the lower position. The support is located at the back of the firebox (see Figure 9). Remove the Support, if necessary, and move it to the appropriate placement.

3. Install the Rear Firebox Liner. This panel rests on top of the accent lights and Rear Brick Panel Support. It will stay in this location as you install the remaining panels. Refer to Figure 46.

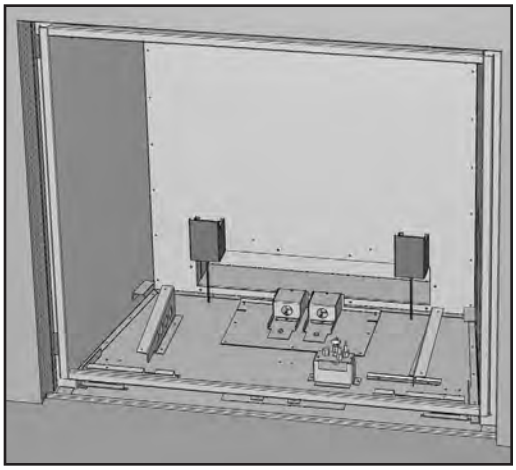

Figure 44: Porcelain Light Covers in Place.

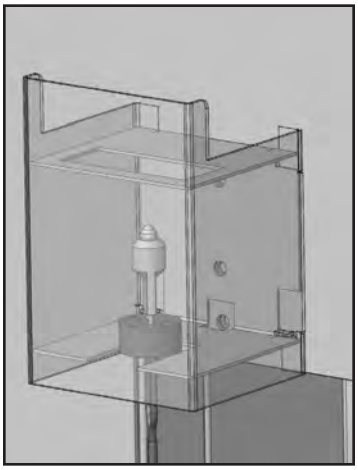

Figure 45: Porcelain Light Covers Close-up.

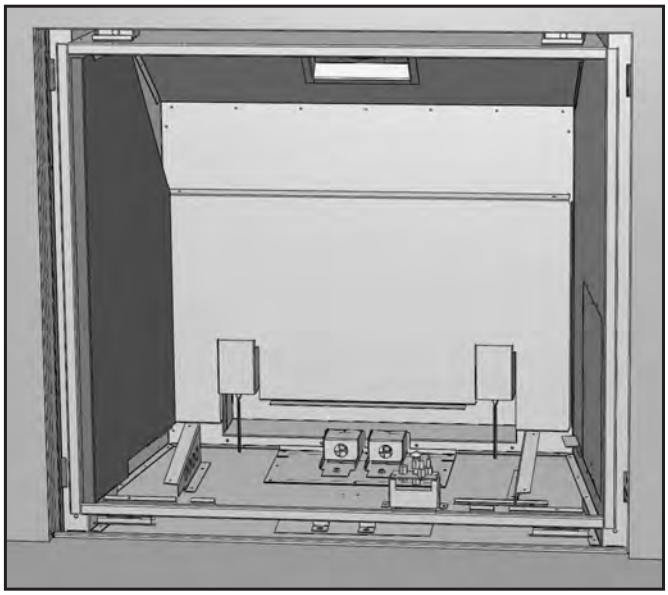

Figure 46: Rear & Left Porcelain Panels in Place.

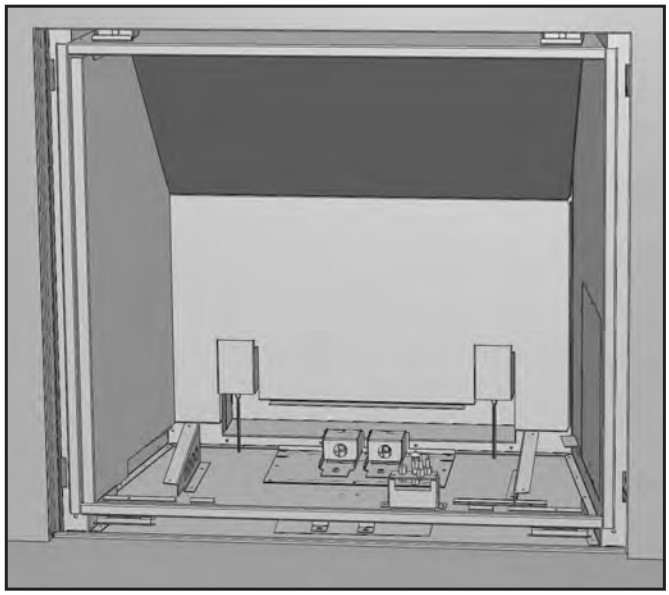

Figure 47: Top Porcelain Panel in Place.

4. Install the Left Firebox Liner Panel; it sits on the bottom front edge of the firebox (see Figure 46), a support bracket at the lower rear of the firebox, and is held in by a retainer at the top of the firebox. Adjust the panel retainers as required.
5. Install the Top Panel by placing it on top of the Rear Panel and behind the Left Panel (see Figure 47). Hold it with one hand or have someone else hold it for you while you place the last panel. WARNING: If this panel falls from this location it will possibly break or the paint work will become chipped.

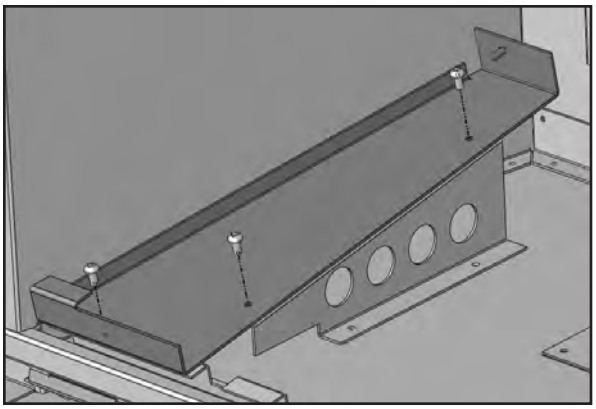

Figure 48: Installing Left Burner Cover Support.

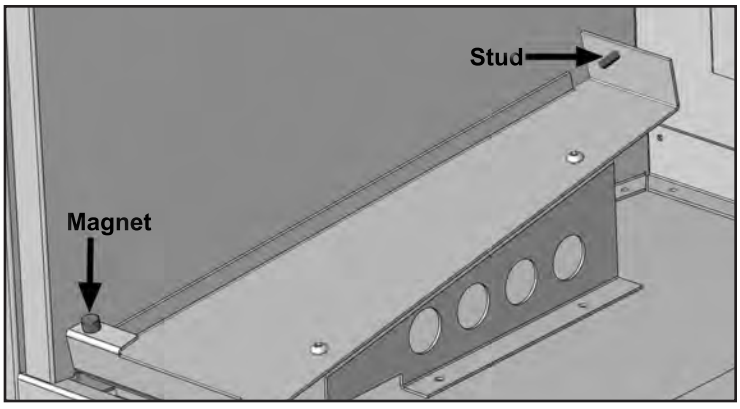

Figure 49: Permanent Magnet on Left Burner Cover Support.

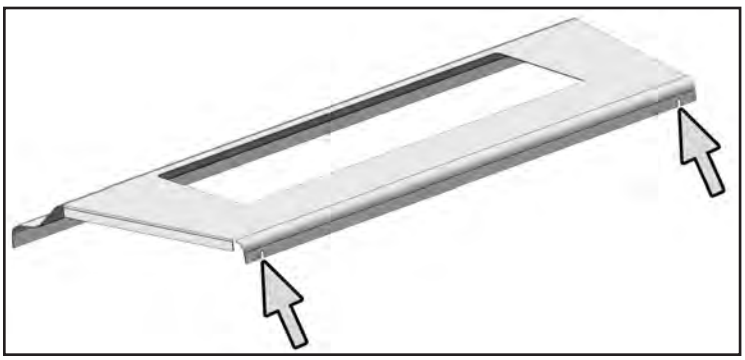

Figure 50: Slots in Back of Burner Cover.

6. Place the Right Firebox Liner Panel in the same manner used for the Left Panel. The vertical edges of the left and right panels should line up with the front edges of the firebox sides. The side panels rest up against the back panel and hold the top panel in position.
7. Install the Left Burner Cover Support as shown in Figure 50. This bracket is installed using three (3) T-20 Torx screws supplied. Install the Right Burner Cover Support Right as you've done on the left side.

8. Place one of the Permanent Magnets provided on the front edge of the Burner Cover Supports as shown in Figure 49.
9. Install the Burner Assembly; refer to Step 1 & 2 of GLASS BURNER INSTALLATION.
10. Place the Ceramic Burner Front on top of the Burner Cover Supports as shown in Figure 49. This part should be pulled forward until it contacts the metal brackets in the front.

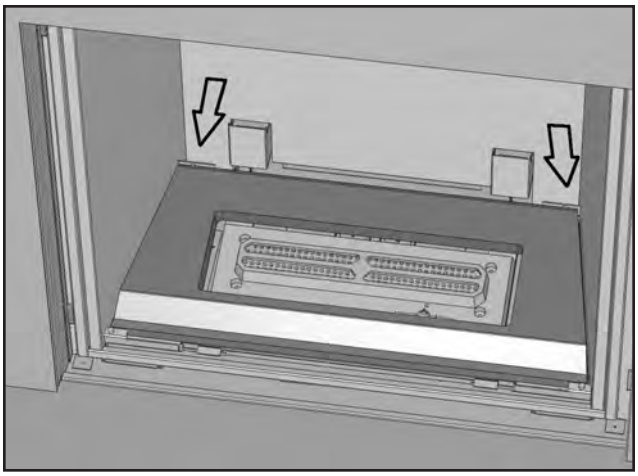

Figure 51 Installing Burner Cover.

11. The Burner Cover has two (2) slots, one the either side of the rear flange (refer to Figure 50). These slots fit over the two (2) studs in the firebox (refer to Figure 49) to keep it in place.

    The arrows in Figure 51 point at the studs that hold the Burner Cover in position. Place the Burner Cover over the pins and then once aligned with the holes, push the Burner Cover back towards the rear of the firebox. The front of the Burner Cover is held in place by the permanent magnets installed in step 8.
12. Install the Glass Tray and the Glass to complete the installation of the Porcelain Panel Kit, refer to Step 3, 4, 5, & 7 of GLASS BURNER INSTALLATION.

OPTIONAL FRONT INSTALLATION:

There are many different styles of optional fronts available for your fireplace. These fireplace fronts hang onto the front of your fireplace using four (4) hooks, one on each corner (refer to Figure 104). These hooks secure the front to the fireplace, providing for easy removal for service access to the fireplace and also to position the front the proper distance away from the glass door and the fireplace facing.

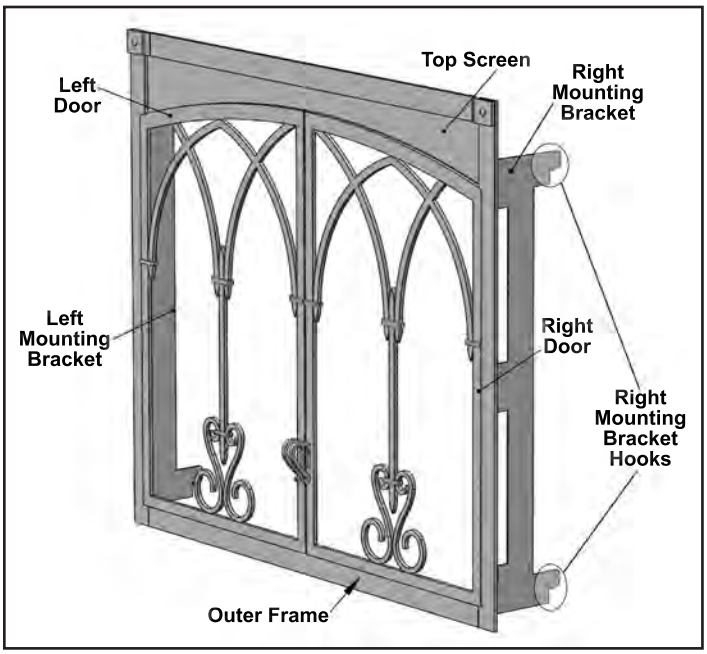

Figure 52: Optional Front Parts.

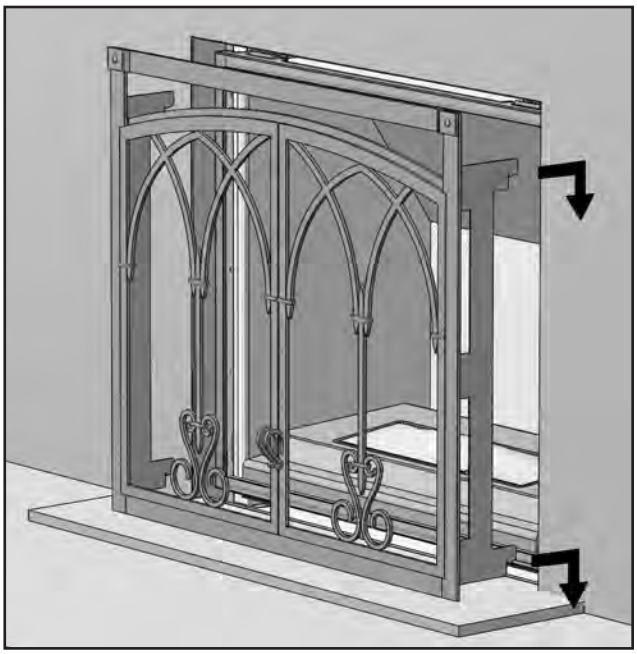

Figure 53: Optional Front Being Installed.

Install the front by lifting it parallel to the fireplace with the mounting bracket hooks pointing towards the fireplace. Slide the hooks all the way into the slots between the Glass Door Frame and the drywall flanges of the fireplace. Pull down on each corner to make sure the hook is engaged with the hanger. Refer to Figures 53 & 54.

IMPORTANT: Ensure that the minimum gap required between the Optional Front and wall of the unit is maintained (refer to Figure 54). Not maintaining the proper gap will cause the unit to run at elevated temperatures and result in an unsafe condition

The face should be cleaned before the fireplace is turned on for the first time.

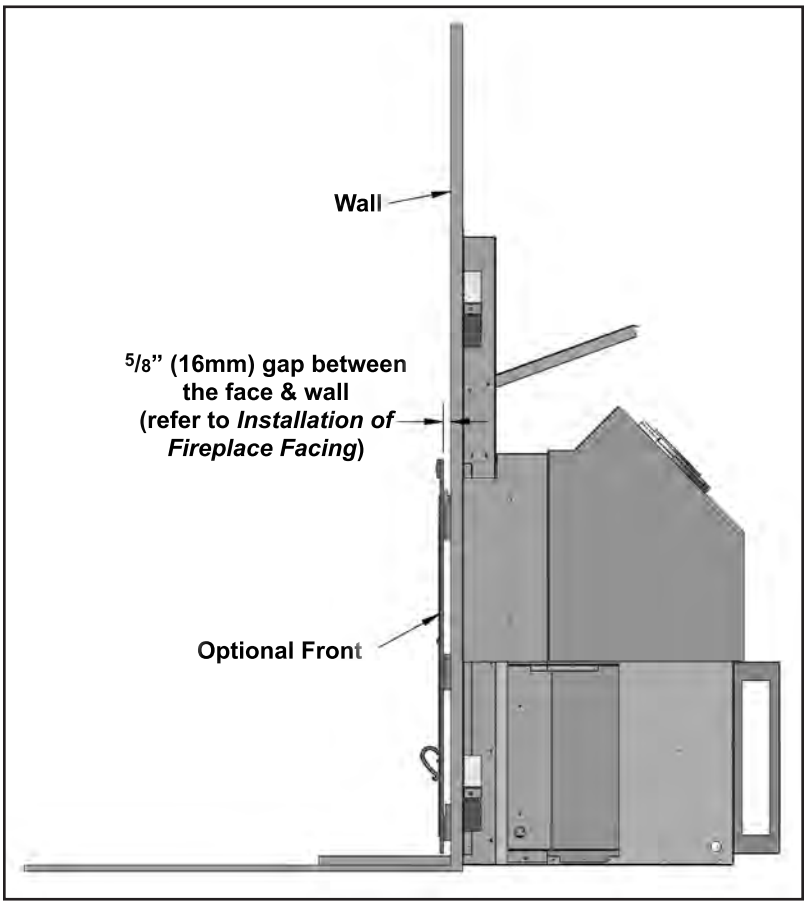

Figure 54: Optional Front Installed.

Start-Up & Operation

Normal Sounds During Operation:

Table 1: Normal Sounds

Component	Sound & Reason
DV48 & Fascia	Creaking when heating up or cooling down.
Burner	Light pop or poof when turned off; this is more common with LP units.
Pilot Flame	Quiet whisper while the pilot flame in on.
Gas Control Valve	Dull click when turning on or off, this is the valve opening and closing.

Remote Control Operations:

The Proflame GTMF is a modular remote control system that directs the functions of the DV48. The Proflame GTMF is configured to control the on/off main burner operation, its flame levels and provides on/off and Smart thermostatic control of the appliance. The system controls a remotely actuated 120V/60Hz power outlet, fan speed through six (6) levels and has a constantly powered 120V/60Hz power outlet.

WARNING

THE TRANSMITTER AND RECEIVER ARE RADIO FREQUENCE DEVICES. PLACING THE RECEIVER IN OR NEAR METAL MAY SEVERELY REDUCE THE SIGNAL RANGE.

ATTENTION!

- **TURN "OFF" THE MAIN GAS SUPPLY OF THE APPLIANCE DURING INSTALLATION OR MAINTENANCE OF THE RECEIVER.**
- **PLACE THE RECEIVER'S 3 POSITION SLIDER SWITCH IN THE "OFF" POSITION DURING INSTALLATION OR MAINTENANCE.**
- **TURN "OFF" MAIN GAS SUPPLY TO THE APPLIANCE PRIOR TO REMOVING OR REINSERTING THE BATTERIES IN THE RECEIVER.**
- **DURING APPLIANCE INSTALLATION/MAINTENANCE OR IN CASE OF REMOTE CONTROL MALFUNCTION TURN OFF THE FAN CONTROL MODULE USING THE "ON/OFF" MAIN POWER SWITCH ON THE FRONT PANEL OF THE FCM.**

Technical Data

Transmitter (Remote Control):
Supply voltage 4.5 V (three 1.5 V AAA batteries)
Ambient temperature ratings 0 - 50 °C (32 - 122 °F)

Receiver:
Supply voltage 6.0 V (four 1.5 V AA batteries)

Fan Control Module:
Supply voltage/frequency: 120 V / 60 Hz
Aux switched output: 120 V / 60 Hz / 2 A
Fan speed output: 120 V / 60 Hz / 1 A

System Description:

The Proflame Remote Control System consists of three (3) elements:
1. Proflame Transmitter.
2. Proflame Receiver and a wiring harness to connect the Receiver to the gas valve, stepper motor and Fan Control Module.
3. Proflame Fan Control Module (FCM)

TRANSMITTER (Remote Control with LCD Display)

The Proflame Transmitter uses a streamline design with a simple button layout and informative LCD display (Figure 55). The Transmitter is powered by three (3) AAA type batteries. A Mode Key is provided to Index between the features and a Thermostat Key is used to turn on/off or index through Thermostat functions (Figure 55 & 56).

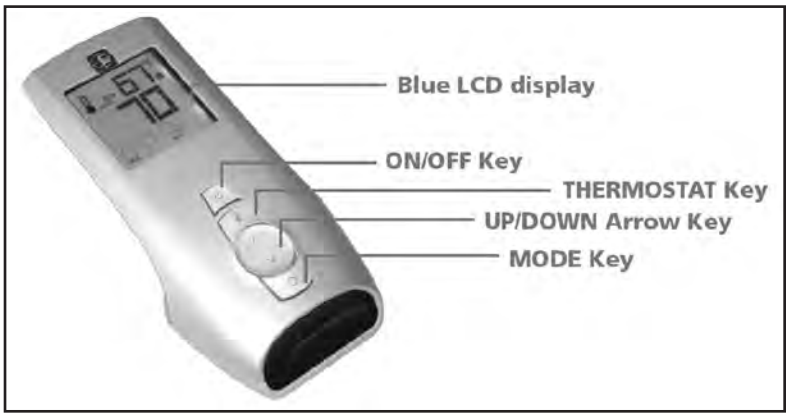

Figure 55: Proflame Transmitter.

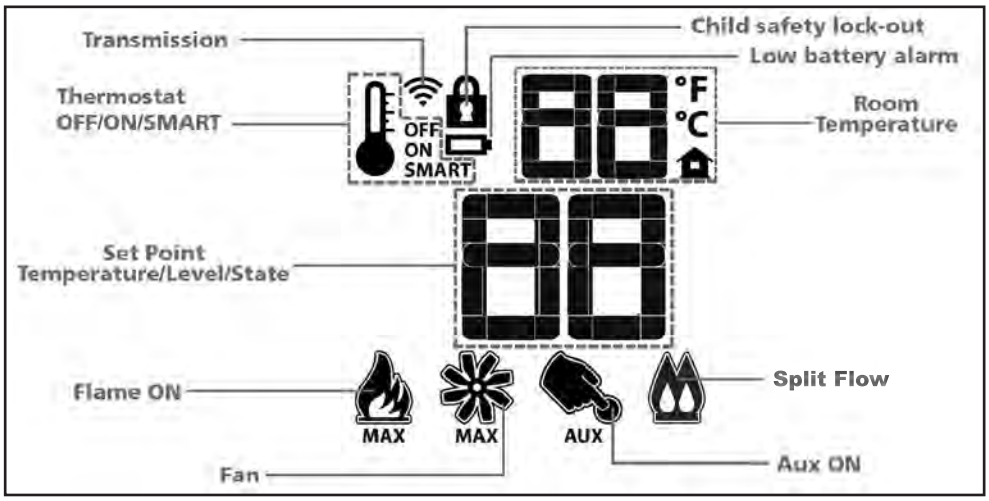

Figure 56: Proflame Transmitter LCD Screen.

RECEIVER

The Proflame Receiver (Figure 57) connects directly to the gas valve, stepper motor, DFC, and Fan Control Module with a wiring harness. The Receiver is powered by four (4) AA type batteries. The Receiver accepts commands via radio frequency from the Transmitter to operate the appliance in accordance with the particular Proflame system configuration. The Receiver three (3) position slider switch can be set to one of three positions: ON (Manual Override), Remote (Remote control), or Off.

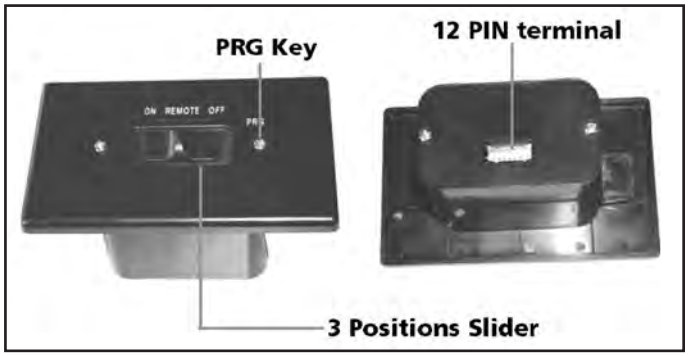

Figure 57: Proflame Receiver.

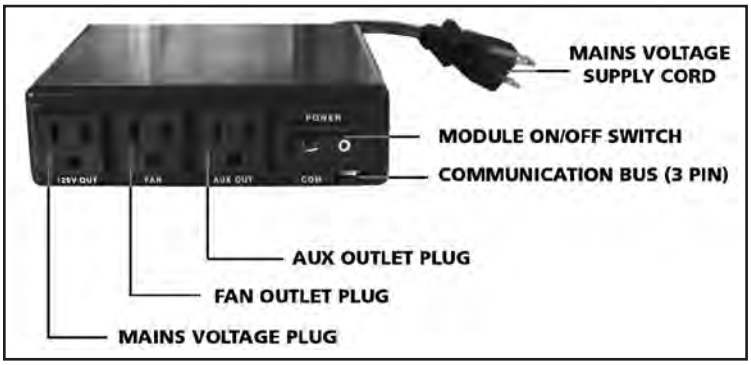

Figure 58: Proflame Fan Control Module.

FAN CONTROL MODULE

Fan Control Module (FCM) offers the added ability to control the fan speed through six (6) speeds, a remotely actuated 120V outlet and a constantly powered 120V outlet. The FCM provides DC power to the Receiver allowing the batteries to be used only when line power is interrupted or lost (see Figure 58).

WALL MOUNTING THE RECEIVER:

The receiver can be placed inside a standard Junction type wall box either by itself or in combination with a light dimmer control. This installation can take place up to 8'ft (2.4m) from the appliance control valve.

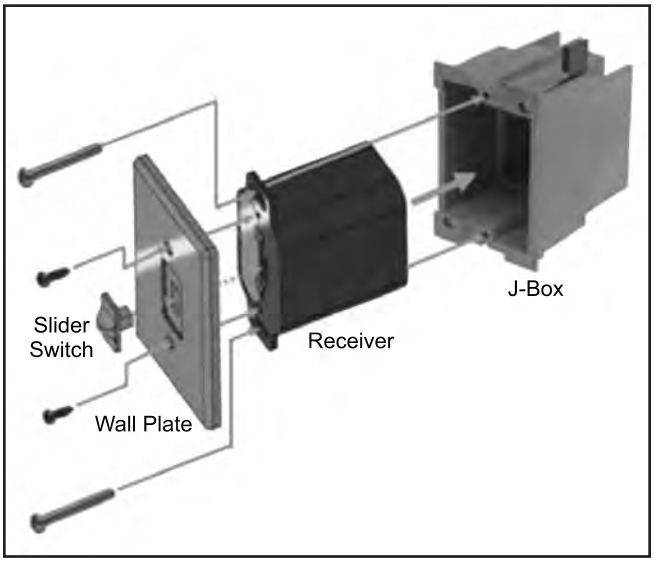

Figure 59: Wall Mounting the Receiver.

1. Connect the wiring harness to the back of the Receiver.
2. Install the Receiver in the Junction box using the existing J box screws (Figure 59).
3. Insert the four (4) AA type batteries in the battery compartment with the correct polarity.
4. Place the slider into the cover plate.
5. Put the Receiver switch in the "OFF" position.
6. Make sure the Receiver and cover plate words "ON" and "UP" are on the same side.
7. Align the slider with the switch on the Receiver and couple the switch into the slider.
8. Align the screw holes.
9. Using the two (2) screws provided secure the cover plate to the Receiver.

OPERATING PROCEDURE:

Initializing The System For The First Time

Install the four (4) AA batteries into the receiver battery bay. Note the polarity of the battery and insert into the battery bay as indicated on the Battery cover (+/-). Place the 3-position slider switch in the "Remote" position (see Figure 57). Using the end of a paper clip, or other similar object, insert the end of the paper clip into the hole marked "PRG" on the Receiver front cover (see Figure 57).

The Receiver will "beep" three (3) times to indicate that it is ready to synchronize with a Transmitter. Install the three (3) AAA type batteries in the Transmitter battery bay, located on the base of the Transmitter. With the batteries already installed in the Transmitter, push the 'ON' button. The Receiver will "beep" four (4) times to indicate the Transmitter's command is accepted and sets to the particular code of that Transmitter. The system is now initialized.

Temperature Indication Display

With the system in the "OFF" position, press the Thermostat Key and the Mode Key at the same time. Look at the LCD screen on the transmitter to verify that a °C or °F is visible to the right of the Room Temperature display (see Figure 60).



Figure 60: Remote Control Display in Farenheit and Celcius.

Turn on the Appliance

Press the ON/OFF Key on the Transmitter. The Transmitter display will show all active Icons on the screen. A single "beep" from the Receiver will confirm reception of the command and will commence to first ignite the pilot light, followed by the main burner. This should take about 10 seconds to complete.

Turn off the Appliance

Press the ON/OFF Key on the Transmitter. The Transmitter LCD display will only show the room temperature and Icon (see Figure 61). A single "beep" from the Receiver confirms reception of the command and both the pilot light (if the unit is not set to continuous pilot) and main burner will turn off.

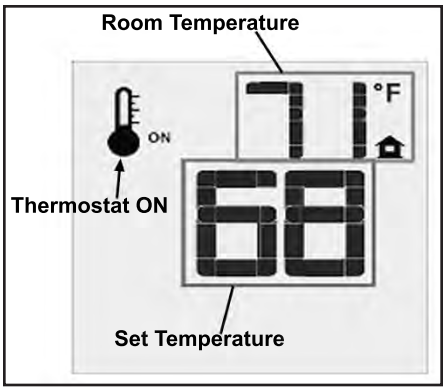

Figure 61: Remote Control Displays Set Temperature.

Room Thermostat (Transmitter Operation)

The Remote Control can operate as a room thermostat. The thermostat can be set to a desired temperature to control the comfort level in a room. To activate this function, press the Thermostat Key (see Figure 55). The LCD display on the Transmitter will change to show that the room thermostat is "ON" and the set temperature is now displayed (see Figure 61). To adjust the set temperature, press the Up or Down Arrow Keys until the desired set temperature is displayed on the LCD screen of the Transmitter.

Smart Thermostat (Transmitter Operation)

The Smart Thermostat function adjusts the flame height in accordance to the difference between the set point temperature and the actual room temperatures. As the room temperature gets closer to the set point the Smart Function will modulate the flame down. To activate this function, press the Thermostat Key (Figure 56) until the word "SMART" appears to the right of the temperature bulb graphic (Figure 62). To adjust the set temperature, press the Up or Down Arrow Keys until the desired set temperature is displayed on the LCD screen of the Transmitter.

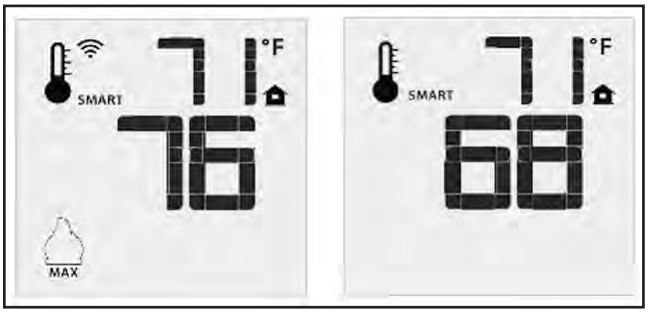

Figure 62: Remote Control's Smart Flame Function.

Remote Flame Control

The Proflame GTMF has six (6) flame levels. With the system on, and the flame level at the maximum in the appliance, pressing the Down Arrow Key once will reduce the flame height by one step until the flame is turned off. The Up Arrow Key will increase the flame height each time it is pressed. If the Up Arrow Key is pressed while the system is on but the flame is off, the flame will come on in the high position (refer to Figure 63). A single "beep" will confirm reception of the command.

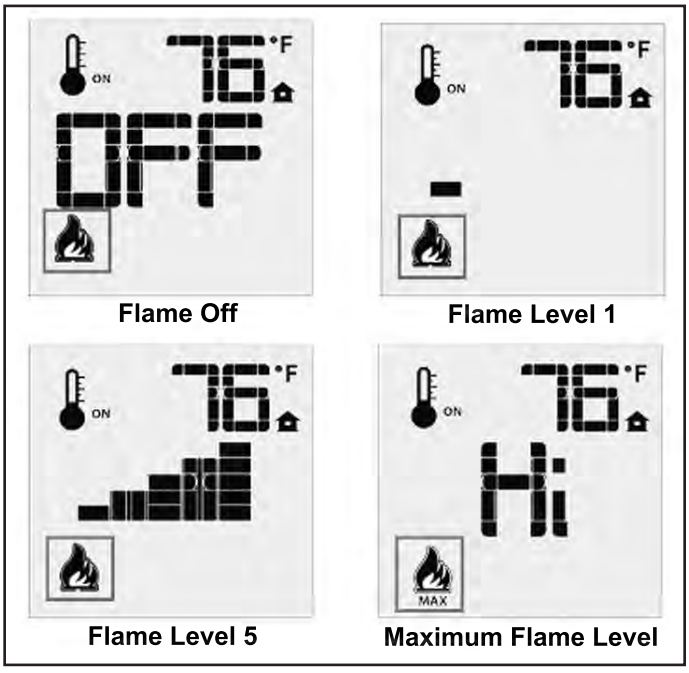

Figure 63: Remote Control's Flame Levels.

Remote Actuated Accent Lights

The DV48 is shipped with two (2) firebox accent lights. They are connected to the auxiliary power outlet of the Proflame Fan Control Module. The lights can be turned on or off using the Auxiliary function on your remote control. Press the Mode Key on the remote control until the Auxiliary Function icon is highlighted. Pressing the Up or Down arrow keys will turn the accent lights on or off. See Figure 64 for the AUX icon details. A single "beep" will confirm the reception of the command.

Key lock
This function will lock the keys to avoid unsupervised operation. To activate this function, press the MODE and UP keys at the same time and the a lock will appear (see Figure 65). To de-activate this function, press the MODE and UP Keys at the same time.

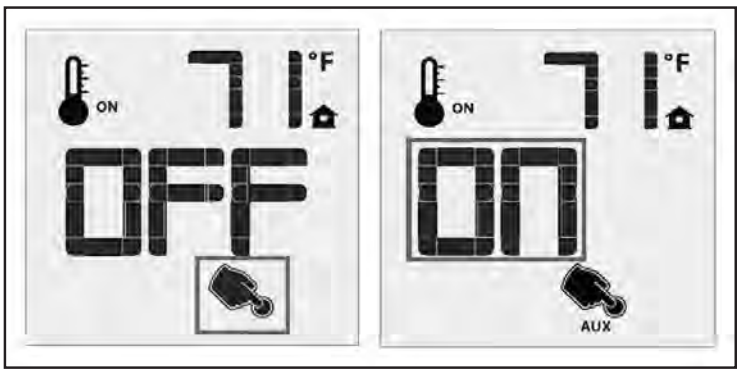

Figure 64: Remote Control with Aux for Accent Lights.

Low Battery Power Detection
Transmitter: The life span of the remote control batteries depends on various factors: quality of the batteries used, the number of ignitions of the appliance, the number of changes to the room thermostat set point, etc. When the Transmitter batteries are low, a Battery Icon will appear on the LCD display of the Transmitter (see Figure 66) before all battery power is lost. When the batteries are replaced this Icon will disappear.

Receiver: The life span of the Receiver batteries depends on various factors: quality of the batteries used, the number of ignitions of the appliance, the number of changes to the room thermostat set point, etc. When the Receiver batteries are low, No "beep" will be emitted from the Receiver when it receives an On/Off command from the Transmitter. This is an alert for a low battery condition for the Receiver. When the batteries are replaced the "beep" will be emitted from the Receiver when the ON/OFF Key is pressed (See *Initializing The System For The First Time*).



Figure 65: Remote Control Locked.



Figure 66: Low Battery Indicator.

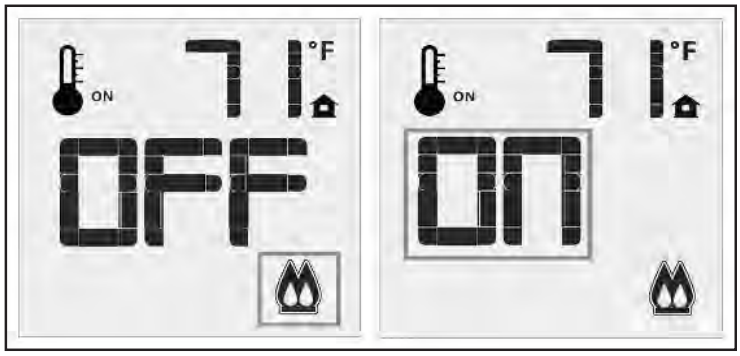

Figure 67: Split Valve Indicator.

Manual Bypass Of The Remote System
If the batteries of the Receiver or Transmitter are low or depleted, the appliance can be turned on manually by sliding the three position slider switch on the Receiver to the ON position. This will bypass the remote control feature of the system and the appliance main burner will come on.

Split Valve Operation
The split flow operation on the DV48 turns off the rear section of the burner, greatly reducing the heat output of the unit. If you'd like to have the fireplace on but would not like to have as much heat in the room, you can turn off this function. Press the bottom key of your remote repeatedly until the double flame icon is lit up (refer to Figure 67). By pressing the up or down key, turn the rear split valve to "on" or "off". The rear flame on the burner will turn on and off. This does not affect the flame setting of the remaining flame. Turning off the rear section of this burner may result in an extinguishing "pop", particularly if your fireplace is operating on propane gas

WARNING: Fire Hazard. Can cause severe injury or death The Receiver causes ignition of the appliance. The appliance can turn on suddenly. Keep away from the appliance burner when operating the remote system or activating manual by pass of the remote system.

WARNING: Shock Hazard. Can cause severe injury or death. This device is powered by line voltage. Do not try to repair this device. In no way is the enclosure to be tampered with or opened. Disconnect from line voltage before performing any maintenance.

WARNING: Devices rated more than 5A shall not be connected to the OUT receptacle. Devices rated more than 1A shall not be connected to the FAN receptacle. Devices rated more than 2A shall not be connected to the AUX receptacle.

CAUTION: Property Damage Hazard. Excessive heat can cause property damage. The appliance can stay lit for many hours. Turn off the appliance if it is not going to be attended for any length of time. Always place the Transmitter where children cannot reach it.

Air Shutter Adjustment:

The DV48 is setup to work with two (2) gas orifices. The orifice on the left (looking from the front) feeds the front burner while the right feeds the rear burner, which can also be switched off using the remote control.

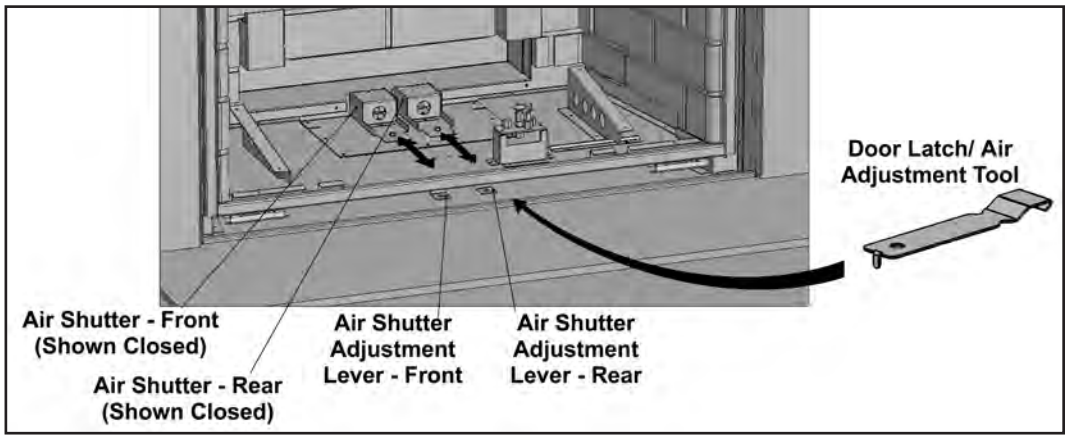

Figure 68: Air Shutter Adjustment.

Each orifice has its own Air Shutter. The Air Shutter is connected to an Adjustment Lever that is accessible from the front and bottom of the firebox. These Air Shutters can be adjusted during the operation of the fireplace.

This Figure 68 shows the fireplace with the door and the burners removed. This is to better show the Air Shutters and the Adjustment Levers. The Door/Air Shutter Tool (see Figure 4) has a small hook on one end. This hook can be used by placing it into the hole at the end of each Adjustment Lever and moving the Adjustment Lever forward or rearward. Moving the Lever towards you opens the Air Shutter, while moving it rearward, closes the Air Shutter.

Air shutters should be adjusted so that the gas flame burns with a blue base and a bright yellow upper section. Air shutters set to closed will lead to a dirty flame which may lead to soot gathering on the logs and/or glass panel. Properly set Air Shutters will result in a very blue flame for the first fifteen (15) minutes of operations with the flame becoming more yellow as the unit comes up to operating temperature.

Table 2: Air Shutter Settings.

		Left	Right
Glass / Media Burner	LP	Open	Open
	NG	Open	Open
Log Set/ Ember Bed Burner	LP	Open	⅛" (3mm) Open
	NG	Open	1/16" (2mm) Open

Check for Proper Burner Flame

Once your new DV48 has run through the "first fire", (see section on first firing) check for proper flame appearance. A gas appliance's performance is dependent on several factors. Vent configuration, fuel type, altitude and restrictor setting are all factors in how the final flame appears in the firebox. The fireplace must be operated for a minimum of 30 minutes or the flame will not normalize. Once this is done, the flame should look similar to Figures 69 & 70. The flame should be lit at all ports, and be burning directly from the burner surface. The base should show some blue with a bright yellow appearance above. The flame should be lively without being disturbed by excessive air turbulence. If your flame does not resemble these images below, ask your service technician to review this installation to determine what adjustments may be required.



Figure 69: Proper Burner Flame for Ember Bed/ Log Burner.



Figure 70: Proper Burner Flame for Glass / Media Burner.

LIGHTING INSTRUCTION LABEL:

CAUTION: Hot while operating. Do not touch. Severe burns may result. Keep children, clothing, furniture, gasoline or other flammable vapors away.

CAUTION: Do not operate this fireplace with the glass removed, cracked or broken. Replacement of the panel(s) should be done by a licensed or qualified person! This appliance needs fresh air for safe operation and must be installed with provisions for combustion and ventilation air. See installation and operating instructions manual. Keep burner and control compartment clean.

WARNING: Improper installation, adjustment, alteration, service or maintenance can cause injury or property damage, or loss of life. Refer to owner's manual provided with this appliance. See installation and operating instructions accompanying appliance. Installation and service must be performed by a qualified installer, service agency, or the gas supplier.

FOR YOUR SAFETY READ BEFORE OPERATING

WARNING: IF YOU DO NOT FOLLOW THESE INSTRUCTIONS EXACTLY, A FIRE OR EXPLOSION MAY RESULT CAUSING PROPERTY DAMAGE, PERSONAL INJURY OR LOSS OF LIFE.

A) This appliance is equipped with an ignition device which automatically lights the pilot. Do not try to light the pilot by hand.

B) BEFORE LIGHTING smell all around the appliance area for gas and next to the floor because some gas is heavier than air and will settle on the floor.

WHAT TO DO IF YOU SMELL GAS:
Do not try to light any appliance. Do not touch any electrical switch: do not use any phone in your building. Immediately call your gas supplier from a neighbors' phone. Follow the gas suppliers instructions. If you cannot reach your gas supplier, call the fire department.

C) If any portion of this appliance does not operate as the instructions indicate, don't try to repair it, call a qualified service technician. Do not use tools. Force or attempted repair may result in a fire or explosion.

D) Do not use this appliance if any part has been under water. Immediately call a qualified service technician to inspect the appliance and to replace any part of the control system and any gas control which has been under water.

OPERATING INSTRUCTIONS

1. STOP! Read the safety information above on this label.
2. Read the owner's manual including the section on "Remote Control" operation.
3. Do not attempt to light the pilot by hand.
4. If you smell gas, STOP! Follow "B" in the safety information above on this label. If you don't smell gas, go to the next step.
5. Using the remote control, set thermostat to desired setting, or switch press the ON/OFF key on the remote. "ON" will be indicated on the display of the remote and an audible "beep" will be heard at the unit to idicate the command has been received.
6. This appliance is equipped with a completely automatic ignition and lighting control. The control will attempt to light the pilot several timesif necessary. If it is unsuccessful, it will discontinue operations. If the appliance does not operate, follow the instructions "To Turn Off Gas To Appliance" and call your service technician or gas supplier.

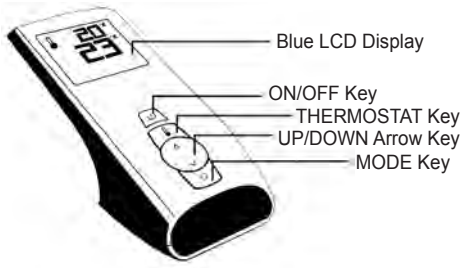

TO TURN OFF GAS TO APPLIANCE

1. Set thermostat to lowest setting, or press the ON/OFF Key. "OFF" will be indicated on the display and an audible "Beep" will be heard at the unit to indicate the command has been received.

C-11800

Figure 71. Lighting Label.

AIR INTAKE:

If for any reason, during the life of this appliance, any portion of the fresh air intake system including the vent termination, vent components or any portion of the air intake that transfers fresh combustion air from the starter collar on the top of the unit to the air intake at the bottom rear of the firebox is disassembled, it must be re-assembled as instructed in the installation portion of the manual. All air intake components must be re-sealed using high temperature sealant or ceramic gaskets as provided by the manufacturer or as shown in the vent installation area of the manual. This process should be completed by a qualified hearth installation technician. Periodic examination of venting systems should be done by a qualified agency.

Service / Maintenance

Light Bulb Replacement

The DV48 comes with 2 accent lights in the rear of the fireplace. These are halogen lights that will need replacing from time to time, depending on use. They can be purchased from most hardware stores or speciality lighting stores. The bulb specifications are:

Halogen bulb 120V 50W GY6.36 (lower wattages may be used)

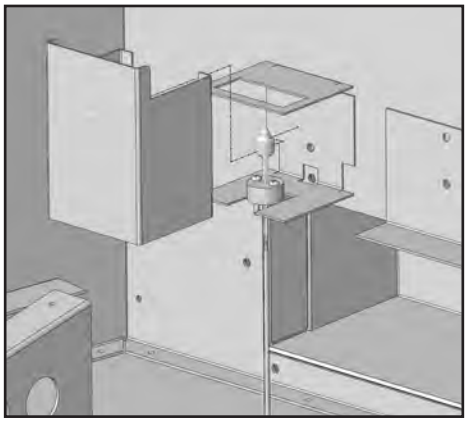

Figure 72. Replacing Light Bulb.

Before replacing the light bulbs, let the unit cool completely to room temperature. In order to replace this bulb, you need to remove the fireplace door, logs, burners and firebox liners. See each specific section in this manual for instructions on how to remove these components. The light is situated in a light cover that is located on the back wall of the firebox. To remove the light cover, lift the cover about ½" and pull towards you. Lift the old bulb from the socket and replace it with the new bulb. It's best not to contact the bulb with your hands. Oils from your skin will diminish the bulbs life. Use paper or the wrapper that the bulb comes in to keep from touching the bulb. If you prefer, the bulb can be replaced with a lower wattage if you'd like to reduce the bulbs effects in the firebox. Re-assemble the various components in the reverse order. **Ensure the light covers are replaced prior to perating the appliance.**

Cleaning / Annual Service:

The DV48 will require maintenance, which can usually be planned on an annual basis. Service should include cleaning, battery replacement, light replacement, venting inspection and inspection of the burner, log sets and firebox liners.The vemting systems should be periodically examined by a qualified agency.

Cleaning The Glass:

When the fireplace has cooled, remove the face of the fireplace along with the glass. See Maintenance And Service - Glass Door Removal. Check the gasket material on the back of the glass, making sure that it is attached and intact.

During a cold start up, condensation will sometimes form on the glass. This is a normal condition with all fireplaces. However, this condensation can allow dust and lint to cling to the glass surface. Initial paint curing of the appliance can leave a slight film behind the glass, a temporary problem. The glass will need cleaning about two weeks after installation. **Use a mild glass cleaner and a soft cloth**; **abrasive cleaners will damage the glass and plated surfaces.** Depending on the amount of use, the glass should require cleaning no more than two or three times a season. **Do not clean the glass when it is hot.**

Replacing Glass:

The glass in the fireplace is a high temperature ceramic. If the glass is damaged in any way, a factory replacement is required (see Parts List - Components). Wear gloves when handling damaged glass door assembly to prevent personal injury. When the glass door assembly is being transported, it must be wrapped in newsprint and tape and/or a strong plastic bag. Do not operate with the glass front removed, cracked or broken. Removal and replacement of the glass from the door **must** be done by a licensed or qualified service person. **The glass must be purchased from an authorized Westgate dealer, part #50-2002. No substitute materials are allowed.**

Burner & Firebox Cleaning:

The flow of combustion and ventilation air not to be obstructed. Periodic maintenance should include cleaning of the firebox, burner and log effects. Refer to the sections on glass door removal, log and or burner installation to remove the glass door, log set (if equipped), burner trim pieces and burners. Using a vacuum with a soft brush attachment, clean out any dust, lint or debris from the floor of the firebox. Using a soft brush, gently remove any dirt or debris from the top surface of the burner. Using the same brush, gently brush away any carbon deposits that have built up on the surface of the logs. Re-install all of these components as shown in the setup / installation portion of this guide. Clean both surfaces of the window glass using commercial glass cleaner and clean soft cloths. Securely re-install the glass door onto the fireplace.

Warranty

Sherwood Industries Ltd. is the manufacturer of the Westgate line of heating products. At Sherwood Industries, our commitment to the highest level of quality and customer service is the most important thing we do. Each Westgate stove is built on a tradition of using only the finest materials and is backed by our Exclusive Lifetime Limited Warranty to the original purchaser. With Westgate, you're not just buying a fireplace or stove, you're buying a company with years of unequalled performance and quality.

Limited Lifetime Warranty:
Under this warranty, Sherwood Industries Ltd. covers the fireplace or stove body and accessories against defects in materials and workmanship, for part repair or replacement for the first seven (7) years and limited labour for the first two (2) years to the original purchaser. This Warranty covers: Firebox, Heat Exchanger, Steel Firebox Panels, Ceramic Logs & Panels, Burner, Ceramic Glass, Pedestals, Panels and Legs. Please see the exclusions and limitation section below as certain restrictions and exclusions apply to this warranty.

Limited Two (2) Year Warranty:
Under this warranty, Sherwood Industries Ltd. covers: Gas Assembly, Blower, Blower control, Temperature Sensors and Wire Harness against defects in materials and workmanship, for part repair or replacement for the first two (2) years and limited labour for the first two (2) years to the original purchaser. Please see the exclusions and limitation section below as certain restrictions and exclusions apply to this warranty.

Limited One (1) Year Warranty:
Under this warranty, Sherwood Industries Ltd. covers all exterior surface finishes against defects in materials and workmanship, for part repair or replacement and limited labour for the first (1) year to the original purchaser. Please see the exclusions and limitations section below as certain restrictions and exclusions apply to this warranty.
Here is how our Warranty works
If you have any concerns with your Westgate product, please contact the dealer where you purchased the fireplace or stove. Your dealer shall make all claims under this warranty in writing.

To the Dealer
When filling out a warranty claim, please complete the following information on an official warranty claim form:
Customer information: Name, address and telephone number of purchaser and date of purchase.
Dealer information: Date of installation, name of installer and dealer, serial number of the appliance, nature of complaint, defects or malfunction, description and part numbers of any parts replaced.

To the Distributor
Sign and verify that work and information are correct.

Exclusions and Limitations:
1. This Warranty does not cover tarnish, discoloration or wear on the plating or paint.
2. This Warranty excludes wear and tear or breakage caused by cleaning, moving or service on log set and panels.
3. A qualified installer must install this stove or fireplace. This Limited Warranty covers defects in materials and workmanship only if the product has been installed in accordance with local building and fire codes; in their absence, refer to the owner's manual. If the product is damaged or broken as a result of any alteration, willful abuse, mishandling, accident, neglect, or misuse of the product, the Limited Warranty does not apply.
4. The stove must be operated and maintained at all times in accordance with the instructions in the Owner's Manual. If the unit shows signs of neglect or misuse, it is not covered under the terms of this Warranty policy. Performance problems due to operator error will not be covered by the Limited Warranty policy.
5. As this is a heating appliance, some changes in colour of surface finishes may occur. This is not a flaw and as such is not covered under this warranty.
6. Some minor expansion, contraction, or movement of certain parts and resulting noise, is normal and not a defect and, therefore, is not covered under this Limited Warranty.
7. Misuse includes over-firing. Over-firing this appliance can cause serious damage and will nullify the Limited Warranty.
8. The Limited Warranty will cover glass thermal breakage only and will not cover misuse of the stove glass, including but not limited to glass that is struck, has surface contaminates or has had harsh or abrasive cleaners used on it.
9. This warranty does not cover products made or provided by other manufacturers and used in conjunction with the operation of this stove without prior authorization from Sherwood Industries Ltd. The use of such products may nullify the Limited Warranty on this stove. If unsure as to the extent of this Limited Warranty, contact your authorized Westgate dealer before installation.
10. Sherwood Industries Ltd. will not be responsible for inadequate performance caused by environmental conditions.
11. The Limited Warranty does not cover installation and operational related problems caused by downdrafts or spillage caused by environmental conditions. Environmental conditions include but are not limited to nearby trees, buildings, roof tops, wind, hills, mountains, inadequate venting or ventilation, excessive offsets, negative air pressures or other influences caused by mechanical systems such as furnaces, fans, clothes dryers etc.

Warranty

12. The Limited Warranty is void if:
    a) The stove has been operated in atmospheres contaminated by chlorine, fluorine or other damaging chemicals.
    b) The stove is subject to submersion in water or prolonged periods of dampness or condensation.
    c) Any damage to the unit, combustion chamber or other components due to water, or weather damage which is the result of, but not limited to, improper chimney/venting installation.
    c) Salt air in coastal areas or high humidity can be corrosive to the finish; these environments can cause rusting. Damage caused by salt air or high humidity is not covered by the Limited Warranty.
13. Exclusions to the Limited Warranty include: injury, loss of use, damage, failure to function due to accident, negligence, misuse, improper installation, alteration or adjustment of the manufacturer's settings of components, lack of proper and regular maintenance, alteration, or act of God.
14. The Limited Warranty does not cover damage caused to the fireplace or stove while in transit. If this occurs, do not operate the stove and contact your courier and/or dealer.
15. Limited Warranty does not extend to or include firebox paint, door or glass gaskets with damage caused by normal wear and tear, or exterior paint discoloration or chipping, worn gaskets, etc.
16. The Limited Warranty does not include damage to the unit caused by abuse, improper installation, or modification of the unit.
17. Damage to plated surfaces caused by fingerprints, scratches, melted items, or other external scores and residues left on the plated surfaces from the use of abrasive cleaners or polishes is not covered in this warranty.
18. The Limited Warranty does not cover tarnish, discoloration or wear on the plated surfaces.
19. The paint on the Metal Brick Liner may peel. This is due to the extreme conditions applied to the paint during normal usage. It is not a flaw and is not covered under warranty.
20. Sherwood Industries Ltd. is free of liability for any damages caused by the fireplace or stove, as well as inconvenience expenses and materials. The Limited Warranty does not cover incidental or consequential damages.
21. The Limited Warranty does not cover any loss or damage incurred by the use or removal of any component or apparatus to or from the Westgate fireplace or stove without the express written permission of Sherwood Industries Ltd. and bearing a Sherwood Industries Ltd. label of approval.
22. Any statement or representation of Westgate products and their performance contained in Westgate advertising, packaging literature, or printed material is not part of the Limited Warranty.
23. The Limited Warranty is automatically voided if the fireplace or stove's serial number has been removed or altered in any way. If the stove is used for commercial purposes, it is excluded from the Limited Warranty.
24. No dealer, distributor, or similar person has the authority to represent or warrant Westgate products beyond the terms contained within the Limited Warranty. Sherwood Industries Ltd. assumes no liability for such warranties or representations.
25. Sherwood Industries Ltd. will not cover the cost of the removal or re-installation of the stove, hearth, facing, mantels, venting or other components.
26. Labour to replace or repair items under this Limited Warranty will be covered per our warranty service fee reimbursement schedule. Labour rates are set per component and as such total labour costs may not be covered.
27. Sherwood Industries Ltd. is not liable for freight or labour on any stove replaced in-field and is not liable for travel costs for service work. In the event of in-home repair work, the customer will pay any in-home travel fees or service charges required by the Authorized Dealer.
28. At no time will Sherwood Industries Ltd. be liable for any consequential damages which exceed the purchase price of the unit. Sherwood Industries Ltd. has no obligation to enhance or modify any stove once manufactured (example: as a stove evolves, field modifications or upgrades will not be performed).
29. This Limited Warranty is applicable only to the original purchaser and it is non-transferable.
30. This warranty only covers Westgate products that are purchased through an authorized Westgate dealer.
31. If for any reason any section of the Limited Warranty is declared invalid, the balance of the warranty remains in effect and all other clauses shall remain in effect.
32. The Limited Warranty is the only warranty supplied by Sherwood Industries Ltd., the manufacturer of the stove. All other warranties, whether expressed or implied, are hereby expressly disclaimed and purchaser's recourse is expressly limited to the Limited Warranty.
33. Sherwood Industries Ltd. and its employees or representatives will not assume any damages, either directly or indirectly, caused by improper usage, operation, installation, servicing or maintenance of this stove.
34. Sherwood Industries Ltd. reserves the right to make changes without notice. Please complete and mail the warranty registration card and have the installer fill in the installation data sheet in the back of the manual for warranty and future reference.
35. Sherwood Industries Ltd. is responsible for stocking parts for a maximum of seven (7) years after discontinuing the manufacture or incorporation of the item into its products. An exception to this would be if an OEM supplier is not able to supply a part.

Installation Data Sheet

The following information must be recorded by the installer for warranty purposes and future reference.

NAME OF OWNER:

_____

ADDRESS:

_____

_____

_____

PHONE:_____

NAME OF DEALER:

_____

ADDRESS:

_____

_____

_____

PHONE:_____

MODEL:_____

SERIAL NUMBER:_____

DATE OF PURCHASE: _____ (dd/mm/yyyy)

DATE OF INSTALLATION:_____(dd/mm/yyyy)

☐ NATURAL GAS (NAT) ☐ PROPANE(LPG)

INLET GAS PRESSURE:_____in wc

MAIN BURNER ORIFICE:_____# DMS

PILOT ORIFICE #_____OR_____in diam.

INSTALLER'S SIGNATURE:

_____

NAME OF INSTALLER:

_____

ADDRESS:

_____

_____

_____

PHONE:_____

MANUFACTURED BY:
SHERWOOD INDUSTRIES LTD.
6782 OLDFIELD RD. SAANICHTON, BC, CANADA V8M 2A3
August 13, 2009
www.westgatefireplaces.com
C-12004