SHERWOOD INDUSTRIES IS AN ENVIRONMENTALLY RESPONSIBLE COMPANY. THIS MANUAL IS PRINTED ON RECYCLED PAPER.

PLEASE KEEP THESE INSTRUCTIONS FOR FUTURE REFERENCE

Westgate

LUXURY FIREPLACES

DV48

BY: SHERWOOD INDUSTRIES LTD

TECHNICAL MANUAL

INSTALLER:
Leave this manual with the appliance.

CONSUMER:
Retain this manual for future reference.



WHAT TO DO IF YOU SMELL GAS

- **Open windows/extinguish any open flame.**
- **Do not try to light any appliance.**
- **Do not touch any electrical switch; do not use any phone in your building.**
- **Immediately call your gas supplier from a neighbour's phone. Follow the gas supplier's instructions.**
- **If you cannot reach your gas supplier, call the fire department.**

FOR YOUR SAFETY: Do not store or use gasoline or other flammable vapours and liquids in the vicinity of this or any other appliance.

WARNING: If the information in this manual is not followed exactly, a fire or explosion may result causing property damage, personal injury or loss of life. Installation and service must be performed by a qualified installer, service agency or the gas supplier.

This appliance may be installed in an after-market permanently located, manufactured (mobile) home, where not prohibited by local codes.

This appliance is only for use with the type of gas indicated on the rating plate. This appliance is not convertible for use with other gases, unless a certified kit is used.

C US

Intertek

Massachusetts installations (Warning): This product must be installed by a licensed plumber or gas fitter when installed within the Commonwealth of Massachusetts. Other Massachusetts code requirements: Flexible connector must not be longer than 36in., a shut off valve must be installed; only direct vent sealed combustion products are approved for bedrooms/bathrooms. A carbon monoxide detector is required in all rooms containing gas fired direct vent appliances. The fireplace damper must be removed or welded in the open position prior to installation of a fireplace insert.

SAFETY PRECAUTIONS

FOR SAFE INSTALLATION AND OPERATION OF YOUR "WESTGATE" HEATER, PLEASE CAREFULLY READ THE FOLLOWING INFORMATION:

- All Westgate gas-fired appliances must be installed in accordance with their instructions. Carefully read all the instructions in this manual first. Consult the building authority having jurisdiction to determine the need for a permit prior to commencing the installation.
- **NOTE:** Failure to follow these instructions could cause a malfunction of the fireplace, which could result in death, serious bodily injury, and/or property damage.
- Failure to follow these instructions may also void your fire insurance and/or warranty.

GENERAL

- Installation and repair should be done by a qualified service person. The appliance should be inspected before the first use and, at least, annually by a qualified service person. More frequent cleaning may be required due to excessive lint from carpeting, bedding material, etc. It is imperative the control compartments, burners and circulating air passageways of the appliance be kept clean.
- Due to high temperatures, the appliance should be located out of high traffic areas and away from furniture and draperies.

Children and adults should be alerted to the hazards of high surface temperatures and should stay away to avoid burn or clothing ignition.

- Young children should be cardully supervised when they are in the same room as the appliance, Toddlers, young children and others may be susceptibie to accidental contact burns. A physical barrier is recommended if there are at risk individuals in the house. To restrict access to a fireplace or stove, install an adjustable safety gate to keep toddlers, young children and other at risk individuals out of the room and avvay from hot surfaces.
- Clothing or other flammable materials should not be placed on or near the appliance.

FOR YOUR SAFETY

- Installation and service must be performed by a qualified installer, service agency or gas supplier.
- This installation must conform to local codes or, in the absence of local codes, to the current CAN/CSA-B149.1 Natural Gas and Propane Installation Code (Canada) or National Fuel Gas Code ANSI Z223.1.2 (USA)
- To prevent injury, do not allow anyone who is unfamiliar with the fireplace to operate it.

- **To prevent injury, if the pilot or pilot and burners have gone out on their own, open the glass door and wait 5 minutes to air out before attempting to re-light the fireplace.**
- Always keep the area around these appliances clear of combustible material, gasoline and other flammable liquids and vapours.
- These appliances should not be used as a drying rack for clothing or for hanging Christmas stockings/ decorations.
- Due to the paint curing on the fireplace, a faint odor and slight smoking will likely be noticed when the fireplace is first used. Open a window until the smoking stops.

Always connect this gas fireplace to a vent system and vent to the outside of the building envelope. Never vent to another room or inside the building. Make sure the specified vent pipe is used, properly sized and of adequate height to provide sufficient draft. Inspect the venting system annually for blockage and signs of deterioration.

WARNING: Failure to position the parts in accordance with the diagrams in this booklet, or failure to use only parts specifically approved with this appliance, may result in property damage or personal injury.

WARNING: Do not operate with the glass front removed, cracked or broken. Replacement of the glass should be done by a licensed or qualified service person.

- Never use solid fuels such as wood, paper, cardboard, coal, or any flammable liquids, etc., in this appliance.
- Do not use this heater if any part has been under water. Immediately call a qualified service technician to inspect the heater and to replace any part of the control or gas control systems that have been under water.
- Do not abuse the glass by striking it or slamming the door shut.

WARNING



HOT GLASS WILL CAUSE BURNS

DO NOT TOUCH GLASS UNTIL COOLED.

NEVER ALLOW CHILDREN TO TOUCH GLASS.

Table of Contents

Safety Precautions....2
Table of Contents....3
Codes And Approvals....4
Specifications....5
- Dimensions....5
- Rating Label Location....5
- Rating Label....6

Planning Your Installation....7
- Introduction....7
- Non-Combustible Material Zone....7
- Typical Framing - Internal Chase....8
- Typical Framing - External Chase....9
- Typical Framing - Corner:....10
- Typical Framing - Sidewall and Mantel....11
- Typical Framing - Raised Hearth....12
- Installation of Fireplace Facing....13
- Installation of Optional Facing Trim....14
- Installation of Receiver....15
- Allowable Vent Configurations....15
- Vent Termination Restrictions....17
- Approved Vent Parts....18
- Installation of Flue Restrictor....19
- TV Installation Above Unit....20
- Planning Your Installation....21
- Assembly of the Unit....21
- Securing unit into Position....21

Installation Set-Up....22
- Installation Of Non-combustible Wall And Hearth Board....22
- Installation Of Venting And Terminations....22
- Horizontal Installation....23
- Vertical Termination Installation....25
- Door Removal and Installation....27
- Gas Hook-Up....28
- Electrical Hook-Up....29
- LP Gas Conversion....29
- Firebox Liner Installation....31
- Log Burner / Ember Bed Installation....33
- Log Set Installation....34
- Glass Burner Installation....36
- Porcelain Panel Kit Installation....38
- Optional Front Installation....40

Wiring Harness....42
Diagnostic Flash codes....43
Troubleshooting....44
Appedix A - Optional Reduced Ceiling Height Installation....46
Parts Diagram....47
Parts Diagram - Options....48
Parts List....49
Warranty....50
Installation Data Sheet....52

Codes And Approvals

DIRECT VENT ONLY: This type is identified by the prefix DV. This appliance draws all of its air for combustion from outside the dwelling, through a specially designed vent pipe system.

This appliance has been tested and approved for installations from 0 feet to 4500 feet (1372 m) above sea level.

In the USA: The appliance may be installed at higher altitudes. Please refer to your American Gas Association guidelines which state: the sea level rated input of Gas Designed Appliances installed at elevations above 2000 (610 m) feet is to be reduced 4% for each 1000 feet (305 m) above sea level. Refer also to National Fuel Gas Code, ANSI Z223.1/ NFPA 54, local authorities, or codes which have jurisdiction in your area regarding the de-rate guidelines.

In Canada: When the appliance is installed at elevations above 4500 feet (1372 m), the certified high altitude rating shall be reduced at the rate of 4% for each additional 1000 feet (305 m). Refer also to CSA-B149.1 Natural Gas and Propane Installation Code, local authorities, or codes which have jurisdiction in your area regarding the de-rate guidelines.

- This appliance has been tested by INTERTEK TESTING SERVICES NA LTD. and found to comply with the established VENTED GAS FIREPLACE HEATER standards in CANADA and the USA as follows:

VENTED GAS FIREPLACE HEATER (DV48; NG/LPG)

TESTED TO: ANSI Z21.88a-2009/CSA 2.33a-2009 VENTED GAS FIREPLACE HEATERS

CAN/CGA 2.17-M91 GAS FIRED APPLIANCES FOR HIGH ALTITUDES

CSA P.4.1-02 TESTING METHOD FOR MEASURING ANNUAL FIREPLACE EFFICIENCY

This Westgate DV48 Fireplace:

- Has been certified for use with either natural or propane gases. (See rating label.)
- Is not for use with solid fuels.
- Is approved for bedroom or bed sitting room. (**IN CANADA**: must be installed with a listed wall thermostat. **IN USA**: see current ANSI Z223.1 for installation instructions.)
- Must be installed in accordance with local codes. If none exist, use current installation code CAN/CSA-B149.1 Natural Gas and Propane Installation Code (Canada in Canada or ANSI Z223.1/NFPA 54 in the USA.
- Must be properly connected to an approved venting system and not connected to a chimney flue serving a separate solid-fuel burning appliance.
- The flow of combustion and ventilation air not be obstructed.



<u>IMPORTANT NOTICE (Regarding first fire up):</u> When the unit is turned on for the first time, it should be turned onto high without the fan on for the first 4 hours. This will cure the paint, logs, gasket material and other products used in the manufacturing process. It is advisable to open a window or door, as the unit will start to smoke and can irritate some people. After the unit has gone through the first burn, turn the unit off including the pilot, let the unit get cold then remove the glass door and clean it with a good gas fireplace glass cleaner, available at your local WESTGATE dealer.

SPECIFICATIONS

DIMENSIONS:

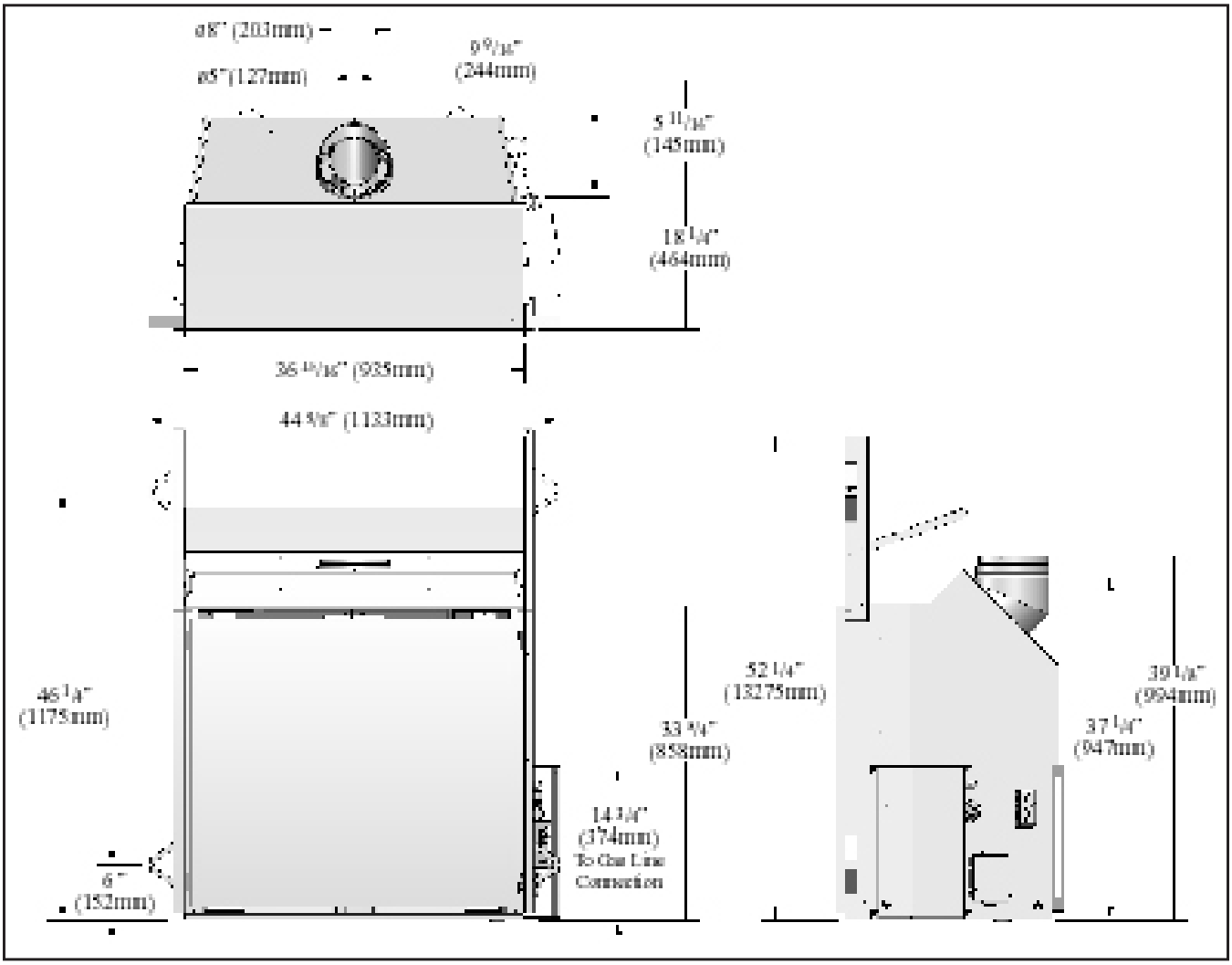

Figure 1. Dimensions of the Firebox.

RATING LABEL LOCATION:

The Rating and Lighting instruction label is located below the door frame, underneath the firebox attached to a chain. To access the label, slide the plate forward out from under the firebox. Always return it when finished.

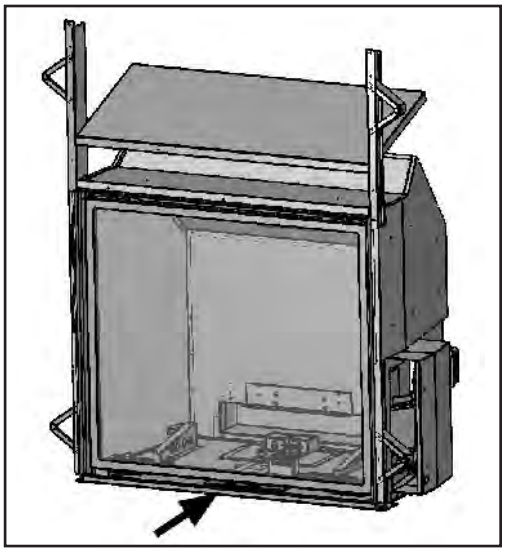

Figure 2. Rating/Lighting Label Location.

RATING LABEL:

DO NOT REMOVE THIS LABEL / N'ENLEVEZ PAS CETTE ETIQUETTE

WH- DV48

VENTED GAS FIREPLACE HEATER ENVIRO MODEL:
FOYER AU GAZ A EVACUATION MODELE ENVIRO: DV48

C US
Intertek

NAT: (Gaz naturel) ☐ LPG (Propane) ☐

Certified for use in Canada & USA
Certifié pour installation au Canada et aux Etats-Unis

TESTED TO / TESTÉE SELON LES NORMES:
ANSI Z21.88-2009/CSA 2.33-2009 VENTED GAS FIREPLACE HEATERS / FOYER AU GAZ EVACUATION; CAN/CGA 2.17-M91 GAS FIRED APPLIANCES FOR HIGH ALTITUDES / LES APPAREILS BRULANT GAZ POUR UTILISATION EN HAUTES ALTITUDES; Can/CSA P.4.1-02 (R2006) TESTING METHOD FOR MEASURING ANNUAL FIREPLACE EFFICIENCY / LA METHODE D'ESSAI POUR MESURER L'EFFICACITE DE CHEMINEE ANNUELLE.

INPUT (ENTRÉE): NAT: 0-4500 FT (1372 M) LPG: 0-4500 FT (1372 M)
MAX: 48,000 BTU (14.07 KW•h) MAX: 48,000 BTU (14.07 KW•h)
MIN: 16,000 BTU (4.68 KW•h) MIN: 17,000 BTU (4.96 KW•h)

MANIFOLD PRESSURE (PRESSION D'ADMISSION):
NAT: 3.5 in. WC (0.87kPa) / 1.6 in. WC (0.40kPa) LPG: 10 in. WC (2.48kPa) / 6.4 in. WC (1.59kPa)

MINIMUM GAS SUPPLY PRESSURE: (PRESSION MINIMALE D'ALIMENTATION DE GAZ PERMISE)
NAT: 5 in. Wc (1.24kPa) LPG: 12 in. Wc (2.98kPa)

ORIFICE SIZE: (DIMENSIONS DE L'ORIFICE)
NAT: Left # 45 DMS, Right # 41 DMS LPG: Left # 55 DMS, Right # 53 DMS

PILOT ORIFICE SIZE: (DIMENSIONS DE PILOTER L'ORIFICE)
NAT: # 62 DMS LPG: Left # 35 DMS

ELECTRICAL RATING:(EXIGENCES ÉLECTRIQUES) Fan type circulator (Ventilateur circulaire): 120V AC 60hz/ Less than 7Amp

CLEARANCES TO COMBUSTIBLES: (DISTANCE OBLIGATOIRE DES COMBUSTIBLES)
Stove side (Côté de poêle): 4 inches (10.2cm), Back (Arrière): 4 inches (10.2cm), Ceiling from bottom of unit (Du fond d'unité au Plafond): 80" inches (203.2cm), From fireplace frame to side wall (Du frome de la cheminée au mur latéral): 10" (25.5 cm), From base of the unit to shelf, header, or 12" (30.5cm) mantel (De la base de l'unité à une étagère, un en-tête, ou un 12" manteau de cheminée): 52.25" (133cm)

VENT PIPE CLEARANCES:(ESPACES LIBRES DE VENTILATION) See manufacturer's listing, label and installation instructions. Verifeez l'identifaction, l'etiquette et les instructionsd installation du fabricant. This appliance must be properly connected to a venting system in accordance with the manufacturer's installation instructions. Cet appareil doit être convenablement connecté à un système donner vent conformément aux instructions d'installation du fabricant.

VENTED GAS FIREPLACE HEATER - NOT FOR USE WITH SOLID FUELS. MAY BE INSTALLED IN BEDROOM OR BEDSITTING ROOM (IN CANADA with a listed wall thermostat). THIS APPLIANCE MUST BE PROPERLY CONNECTED TO A VENTING SYSTEM IN ACCORDANCE WITH THE MANUFACTURER'S INSTALLATION INSTRUCTIONS. FOR DIRECT DISCHARGE WITHOUT DUCT CONNECTION. This appliance must be installed as per manufacturers installation instructions and in accordance with local codes if any. If none exist, use current installation code CAN/CSA B149.1 in Canada or ANSI Z223.1/NFPA 54 in the USA. This vented gas fireplace is not for use with air filters. FOR USE WITH GLASS DOORS CERTIFIED WITH THE APPLIANCE ONLY. This appliance is only for use with the type(s) of gas indicated on the rating plate. A conversion kit is available for this appliance. This appliance is not convertible for use with other gases, unless a certified kit is used. Sections of the venting system have not been installed. WARNING: Do not operate the appliance until all sections have been assembled and installed in accordance with the manufacturers instructions.

FOYER AU GAZ A EVACUATION - NE PAS EMPLOYER AVEC DES COMBUSTIBLES SOLIDES. Cet appareil peut être installé dans une chambre à coucher ou un studio. Cet appareil doit être branché correctement à un système de conduits. Uniquement pour l'échappement direct sans raccord de conduit.Cet appareil doit être installé selon les directives d'installation du manufacturier et selon les codes locaux, s'il y a lieu. Autrement, employez le code d'installation en vigueur au Canada CAN/CSA B149.1. Ne pas utiliser de filtre a air avec ce foyer au gaz a evacuation. POUR L'USAGE AVEC PORTES VITREES A CERTIFIE AVEC L'APPAREIL SEULEMENT. Cet apperareil doit etre utilise uniquement avec le type de gaz indique sur la plaque. Cet appareil ne peut etre converti a d'autres gaz sauf si une trouse de conversion certifee est utilisee. ADVERTISSEMENT: Ne pas utiliser l'appareil tant que toutes les sections n'ont pas ete assemblees et installees selon les instructions du fabricant.

MOBILE HOME: May be installed in an aftermarket, permanently located, manufactured home (USA only) or mobile home, where not prohibited by local codes. See owner's manual for details. This appliance must be installed in accordance with the current Standard for Mobile Homes, CAN/CSA Z240, or the Manufactured Home Construction and Safety Standard, Title 24 CFR, Part 3280, or when such standard is not applicable, the current Standard for Fire Safety Criteria for Manufactured Home Installations, sites, and Communities, ANSI/NFPA 501A.

LA MAISON MOBILE : Peut être installé dans une maison mobile. Cet appareil doit être installé conformement aux Normes actuelles pour Maisons Mobiles, le BOITE/CSA Z240, ou les Normes de Construction et de Sureté des Maisons Pré-fabriquées (Titre 24 CFR, la Partie 3280). Quand ces Normes ne sont pas en vigueur, il faut suivre les criteres pour la sureté (contre les increndies) et pour la construction des Maisons Pré-fabriquées, leurs sites, ANSI/NFPA 501A, et des communautées aux Instructions du manufacturier.

MANUFACTURED BY (FABRIQUE PAR) : SHERWOOD INDUSTRIES LTD. 6782 OLDFIELD RD. SAANICHTON, BC, CANADA

CAUTION: Hot while in operation. Do not touch. Keep children, clothing, furniture, or gasoline and other liquids having flammable vapors away. ATTENTION: Très chaud quand allumé. Ne touchez pas, les brûlures sévères peuvent résulter. Tenez loin des enfants, des vêtements, des meubles,de l'essence ou d'autres fluides produisant des vapeurs inflammables.

DATE OF MANUFACTURE: DATE DE FABRICATION:

J	F	M	A	M	J	J	A	S	O	N	D	2010	2011	2012	2013

Figure 3. Rating Label.

Planning Your Installation

Introduction:

This section of the technical manual is for the use of qualified technicians only. Fireplace placement, hearths, facings, mantles, and venting terminations will be covered, as well as the gas and electric systems. There are several installation safety guidelines that must be adhered to. Please carefully read the safety precautions at the front of this manual.

Warning: Clearances must be sufficient to allow access for maintenance and service.

If installing a Power Vent Kit (50-1970) or a Heat Distribution Kit (50-1935), refer to the instructions included with the kits to aid in your planning.

Non-Combustible Material Zone:

This installation guide will show you many options for installing your new DV48. Some options include external chases, internal chases, rock facing and corner installations. No matter what direction your installation takes, this illustrations shows an area where no combustible building products may go. This illustration applies to any and all installations for the DV48 and should be used as the first reference before any others. Failure to comply with this requirement can lead to elevated operating temperatures, degradation of materials or even result in fire. If you are un-clear about any details contained here, consult with your retailer prior to installation.

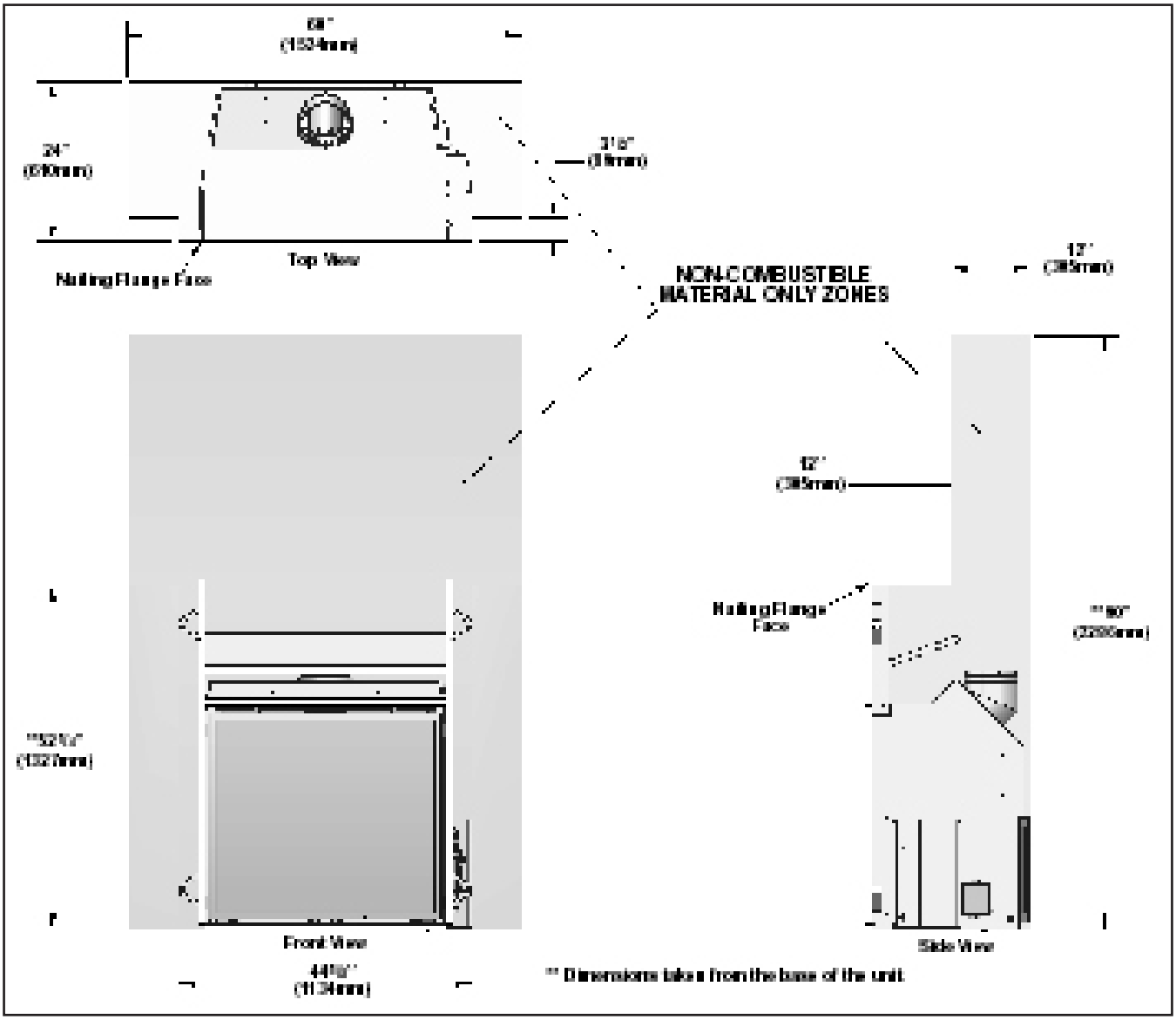

Figure 4. Non-Combustible Material Zone.

TYPICAL FRAMING - INTERNAL CHASE:

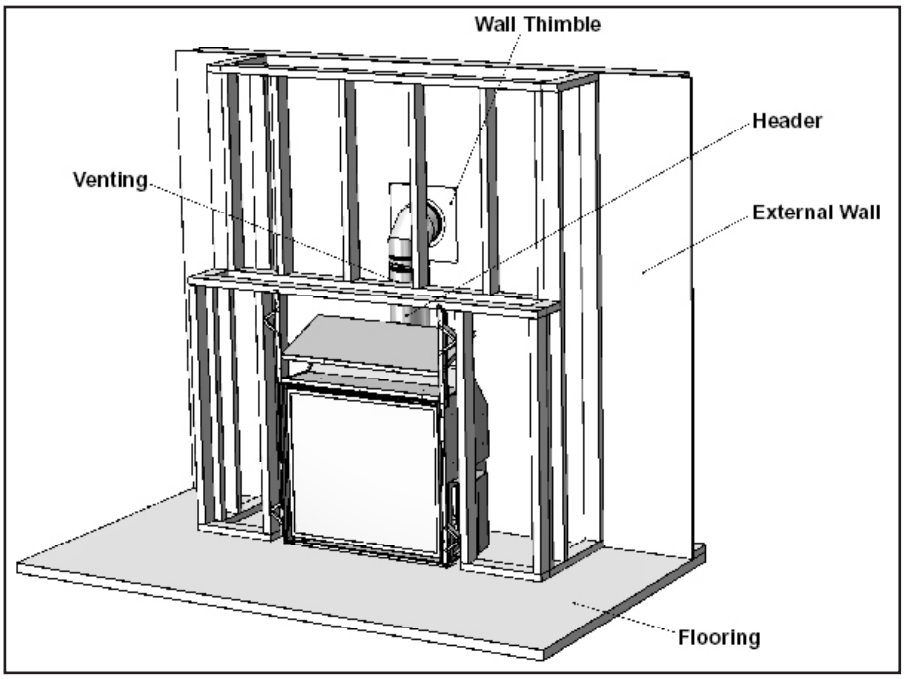

Figure 5. Typical Framing for Internal Chase - General.

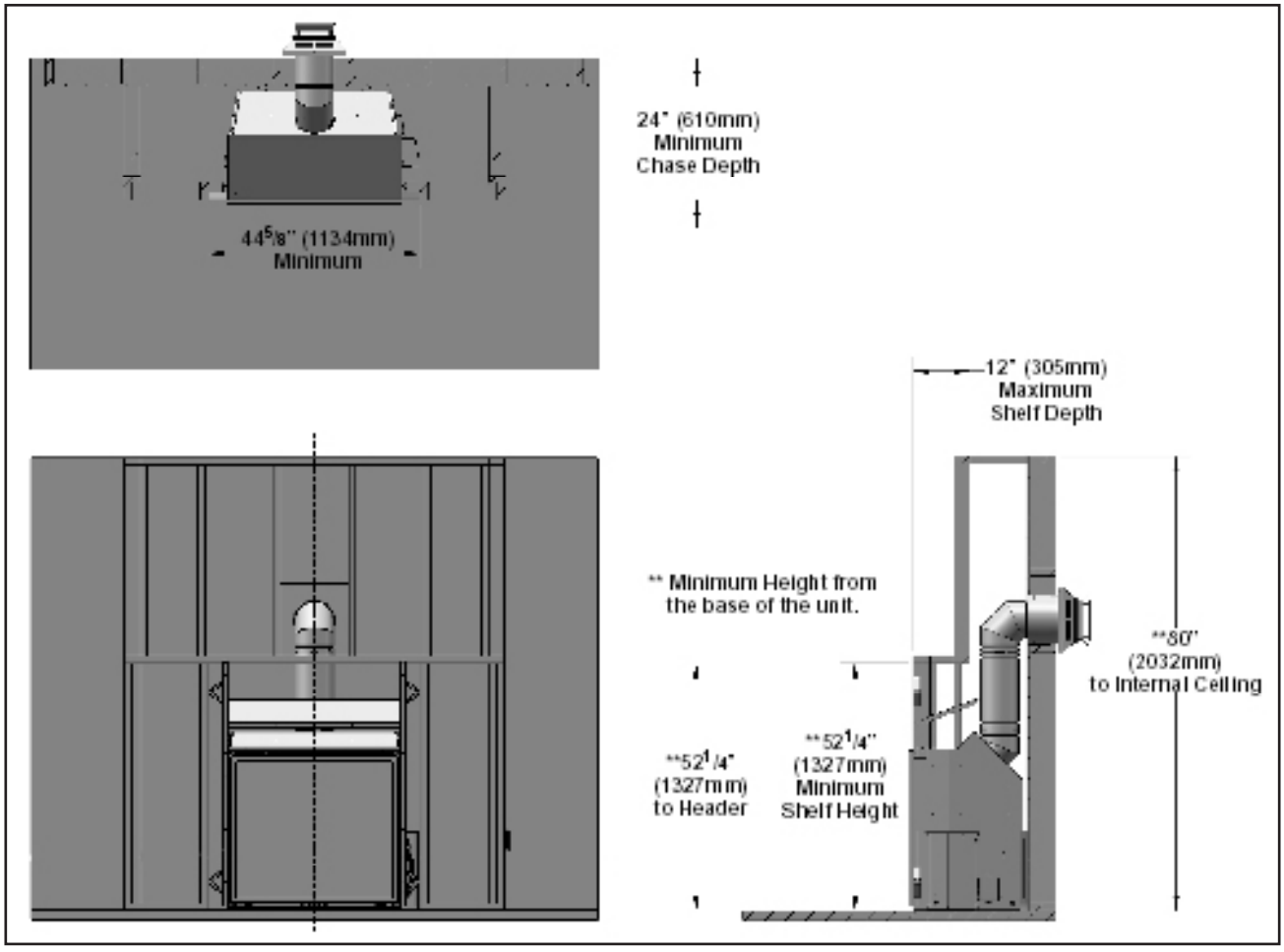

Figure 6. Typical Framing for Internal Chase - Detailed.

TYPICAL FRAMING - EXTERNAL CHASE:

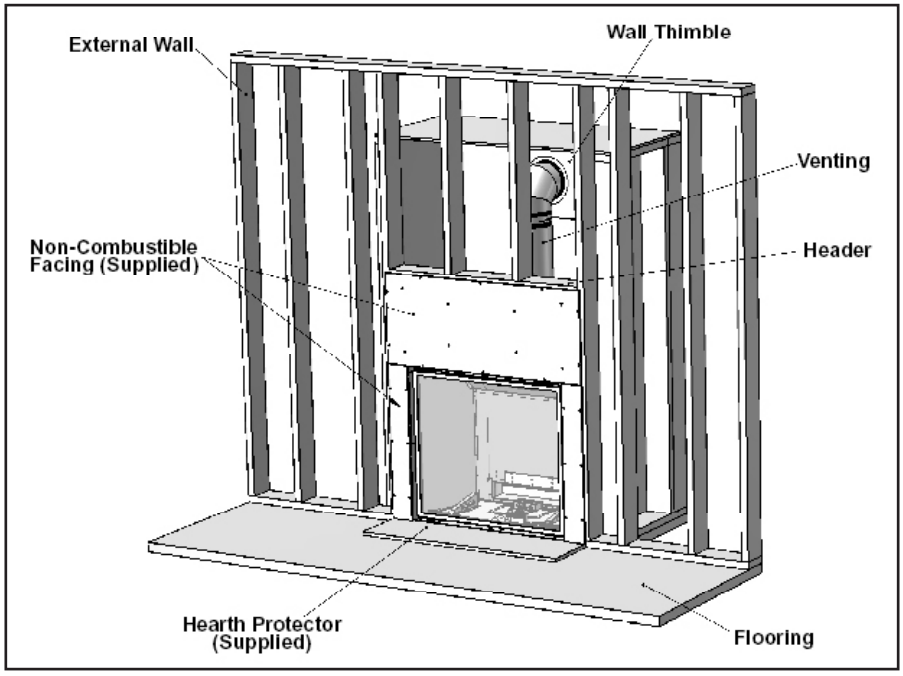

Figure 7. Typical Framing for External Chase - General.

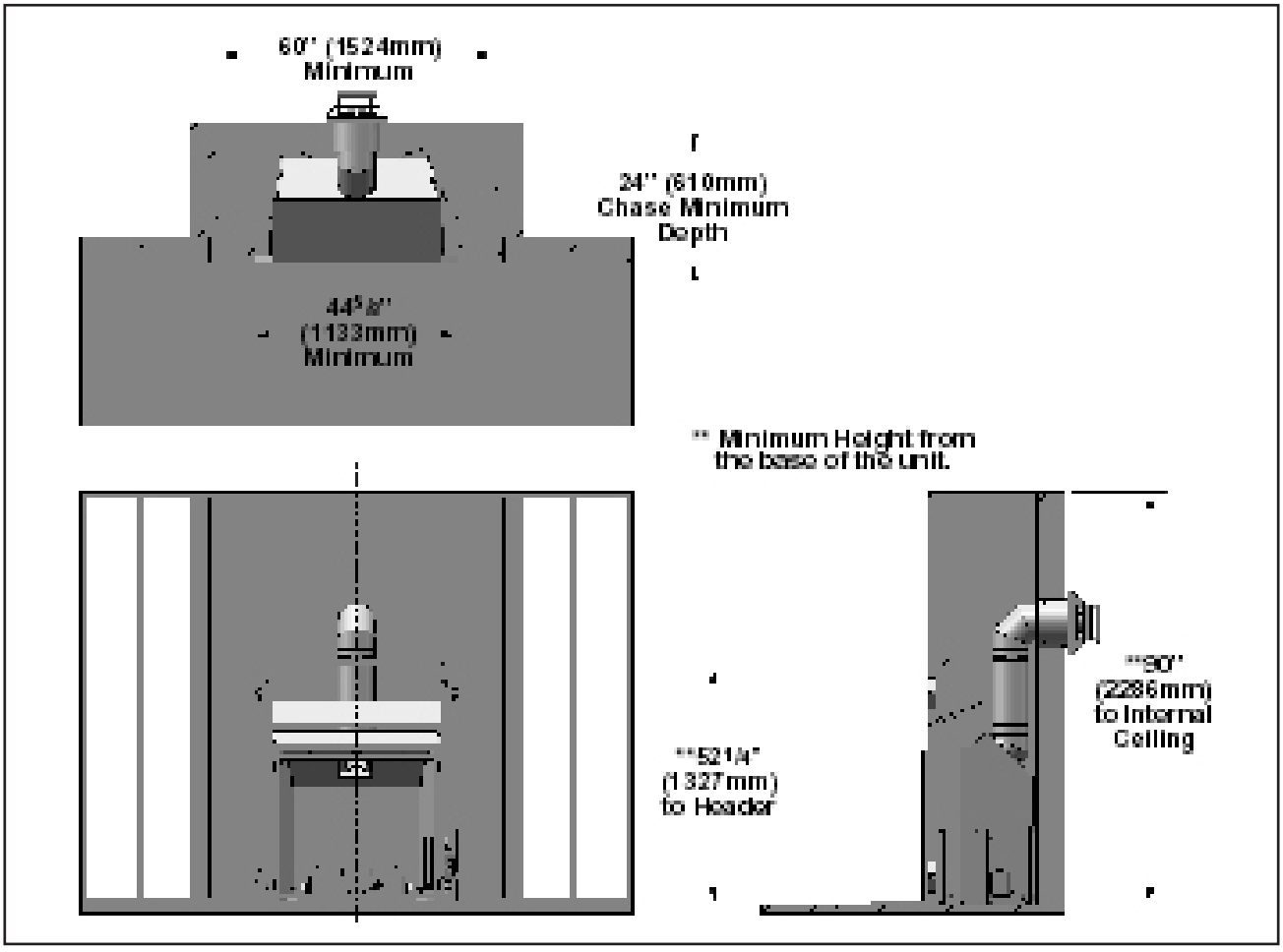

Figure 8. Typical Framing for External Chase - Detailed.

TYPICAL FRAMING - CORNER:

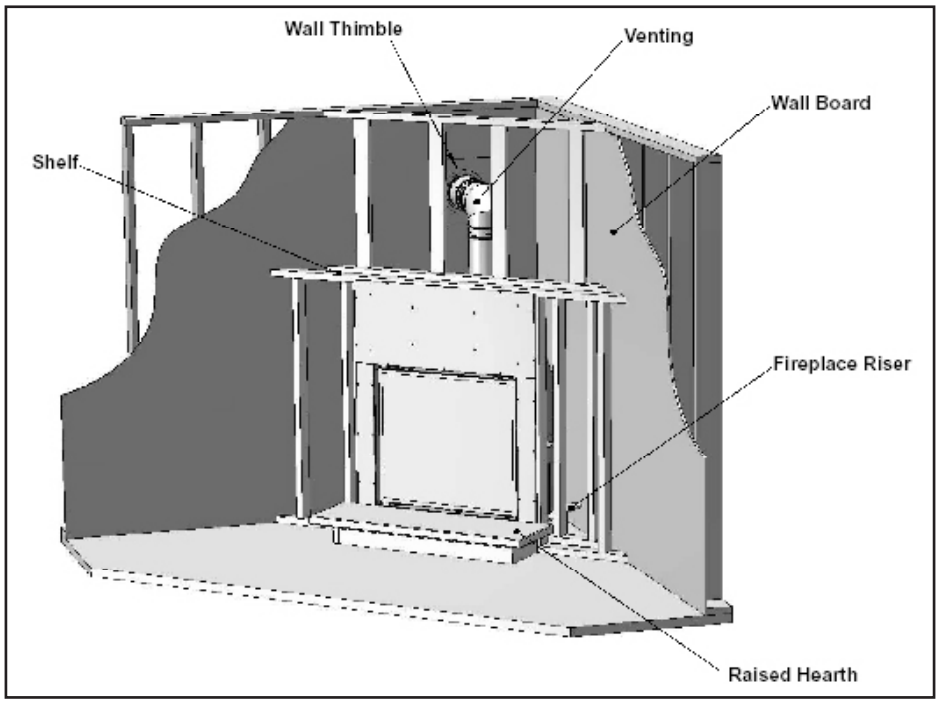

Figure 9. Typical Framing for Corner - General.

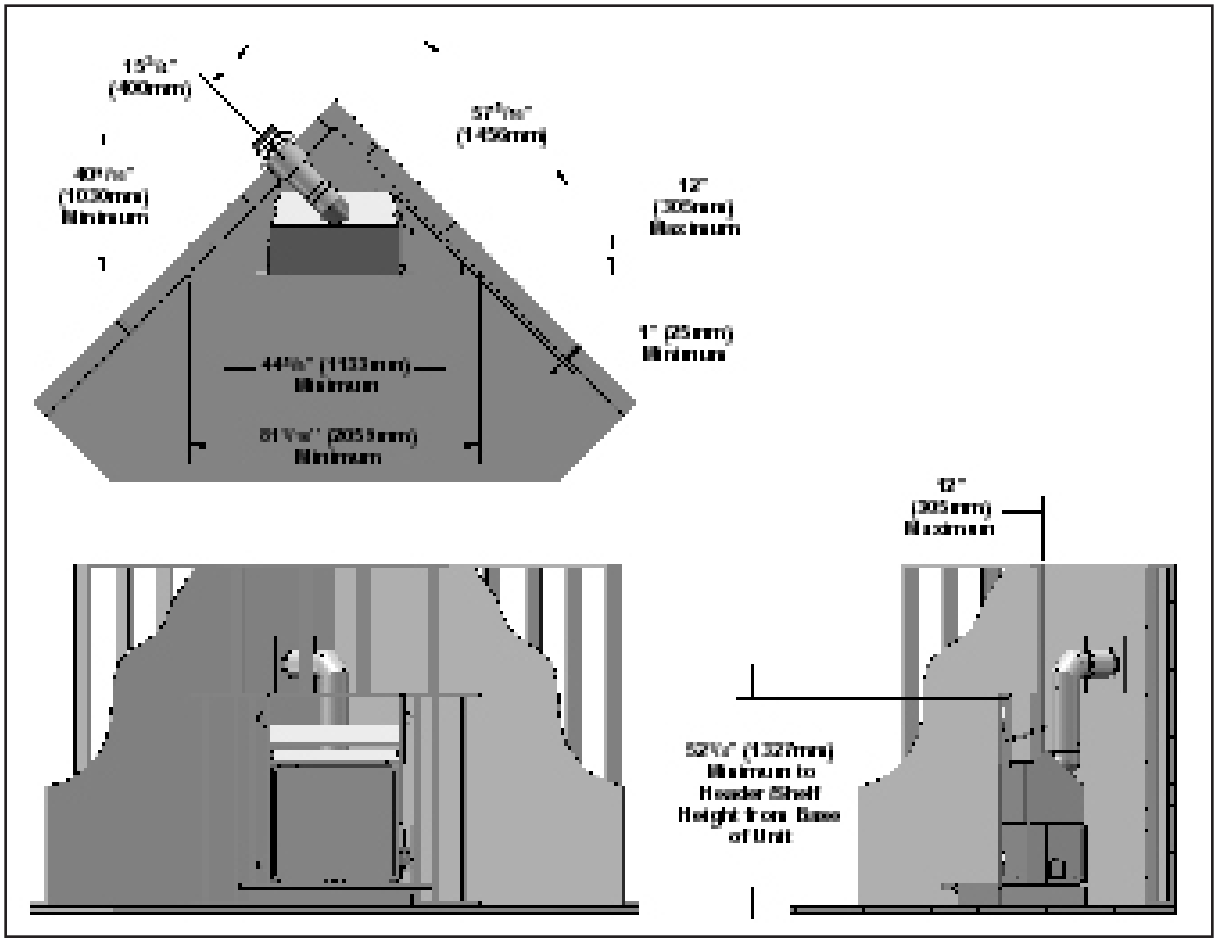

Figure 10. Typical Framing for Corner - Detailed.

TYPICAL FRAMING - SIDEWALL AND MANTEL:

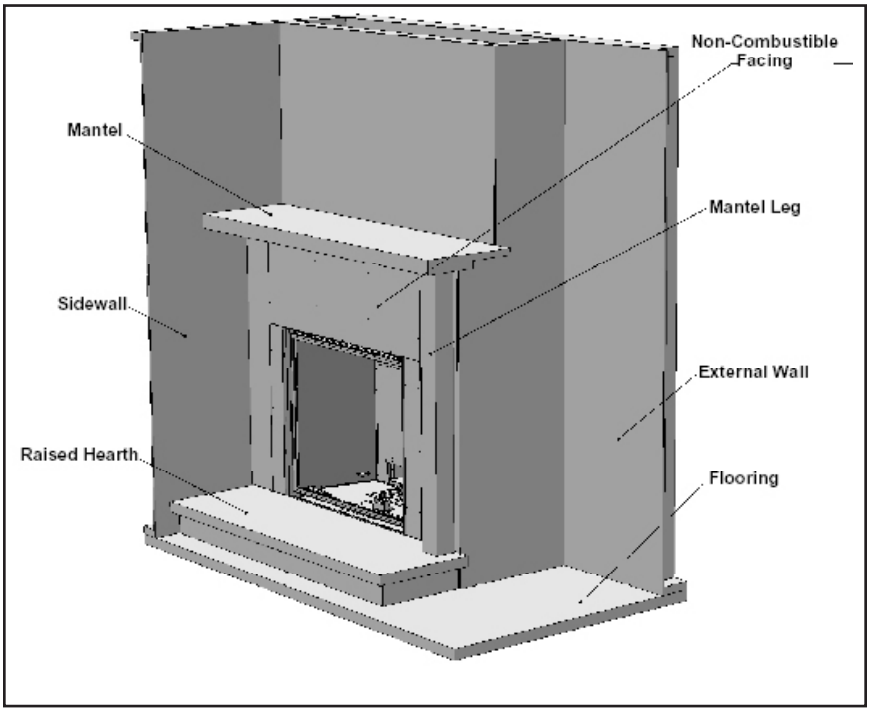

Figure 11. Typical Framing for Sidewalls & Mantel - General.

The mantel's maximum overhang is 10" (254mm) at the minimum height of 52¼" (1327mm) measured from the base of the fireplace.

The mantel can extend 1" (25.4mm) further for every 1" (25.4mm) of height it is installed over the minimum height, as shown in Figure 12.

Non-combustible mantels and mantel legs are not limited to these dimensions.

Mantel temperatures are monitored during testing and can reach 117°F (47°C) above room temperatures. Make sure the finish on your mantel is suitable for temperatures of this range.

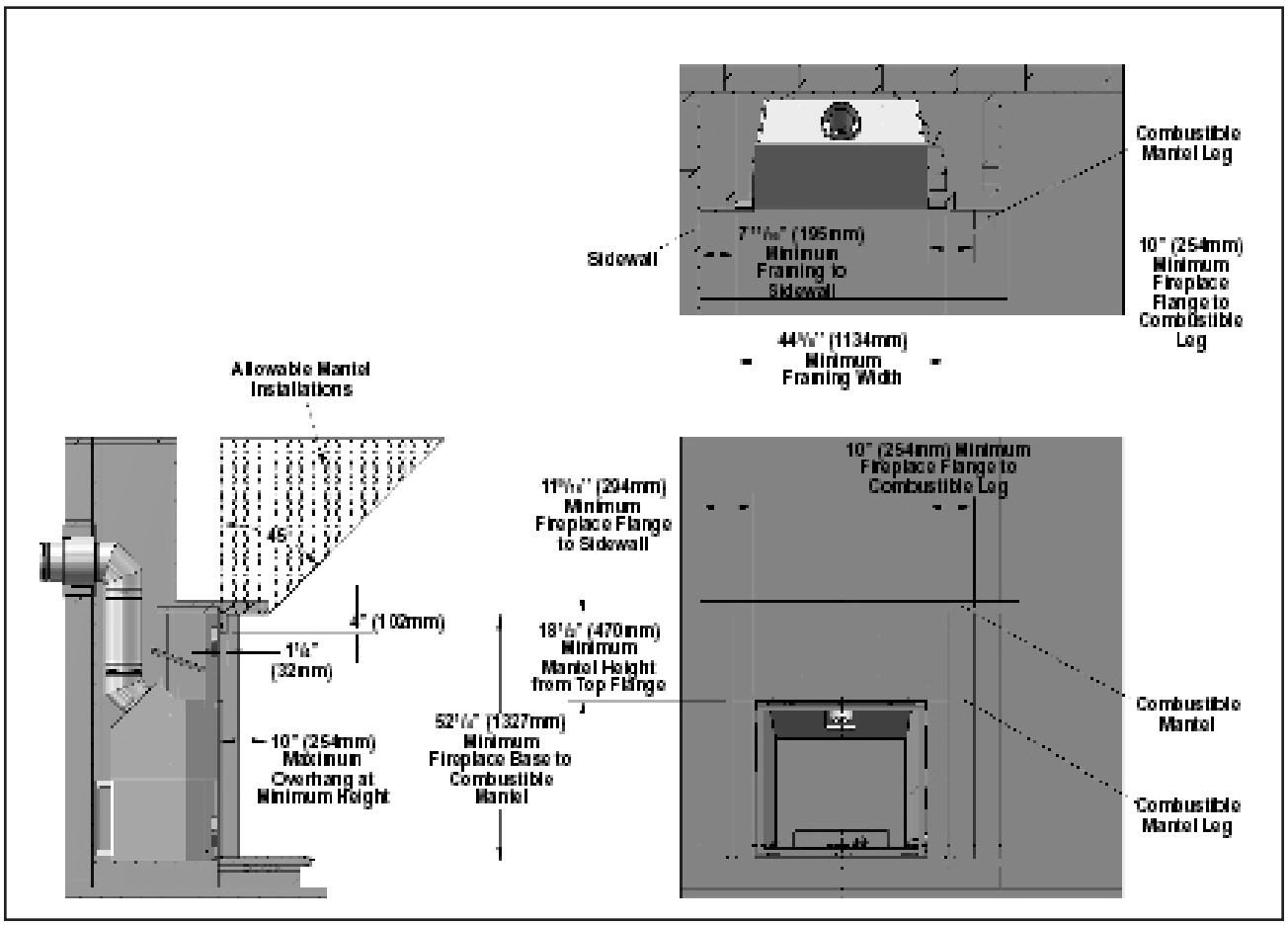

Figure 12. Typical Framing for Sidewalls & Mantel - Detailed.

TYPICAL FRAMING - RAISED HEARTH:

Warning: Failure to follow these guidelines may result in elevated operating temperatures, an inability to remove or install the door, or install the optional fronts that are available for this unit.

A non-combustible Hearth Insulation Board is required (supplied) to be installed between any non-combustible hearth covering and any combustible flooring beneath.

The design of the unit is such that the fireplace must be raised by the same distance as any additional hearth covering or riser that are added in front of the fireplace.

Figure 14 shows a raised hearth made of a wooden construction hearth riser (B), covered with the insulation board provided and then covered with non-combustible slate (A). The thickness of the riser (B) is 4" (102mm). The thickness of the slate (A) is 2" (52mm). A+B=C which is 6" (152mm). In summary, the fireplace must be raised by the same thickness of any material added in front of the fireplace, with exception of the ½" (13mm) Hearth Insulation Board that was provided with the unit.

If the raised hearth is deeper or wider than the Insulation Board provided with the unit, additional non-combustible materials such as Backer Board (cement board) can be used to build up to the same thickness as the Insulation Board.

All header, ceiling or shelf dimensions are measured from the floor that the fireplace sits on. Failure to maintain minimum installation dimensions can lead to elevated temperatures, fire or personal injury.

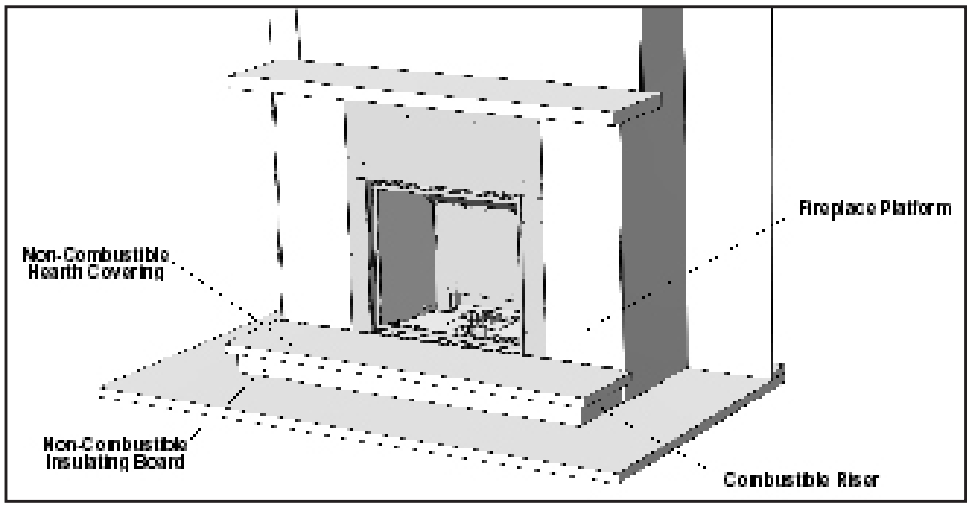

Figure 13. Typical Framing for a Raised Hearth - General.

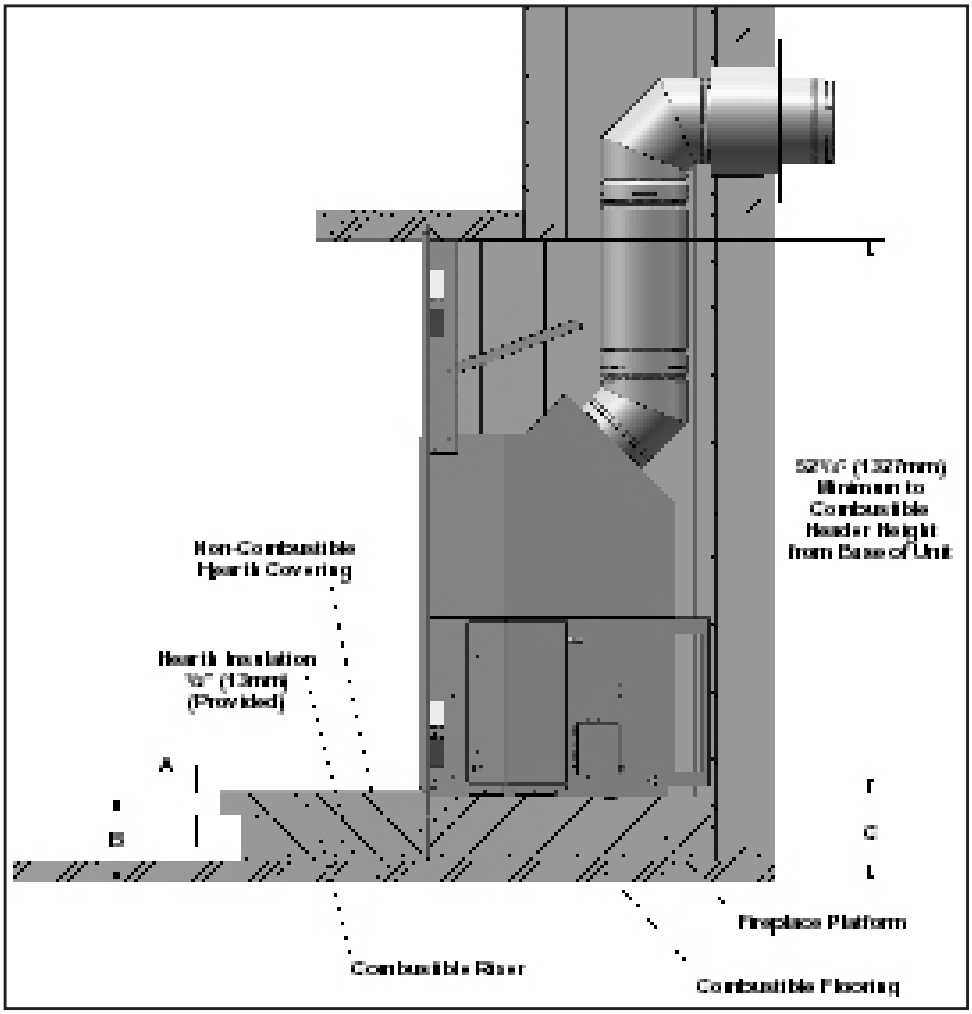

Figure 14. Typical Framing for a Raised Hearth - Detailed.

For optional Reduced Ceiling Hieght installations, see Appendix A.

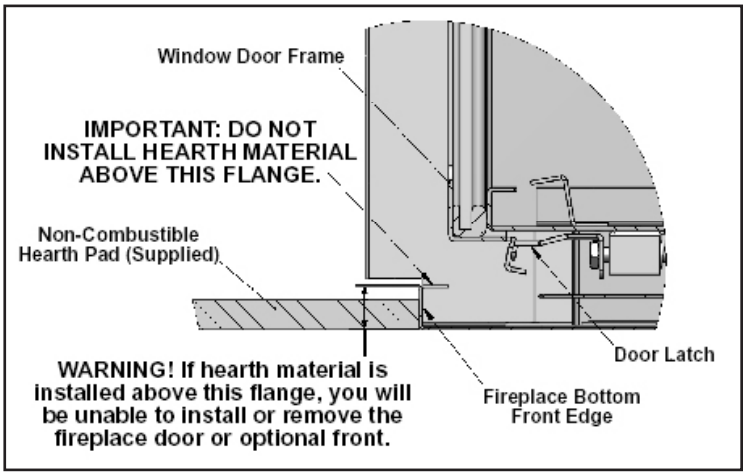

Figure 15. Fireplace Section for a Raised Hearth - WARNING.

INSTALLATION OF FIREPLACE FACING:

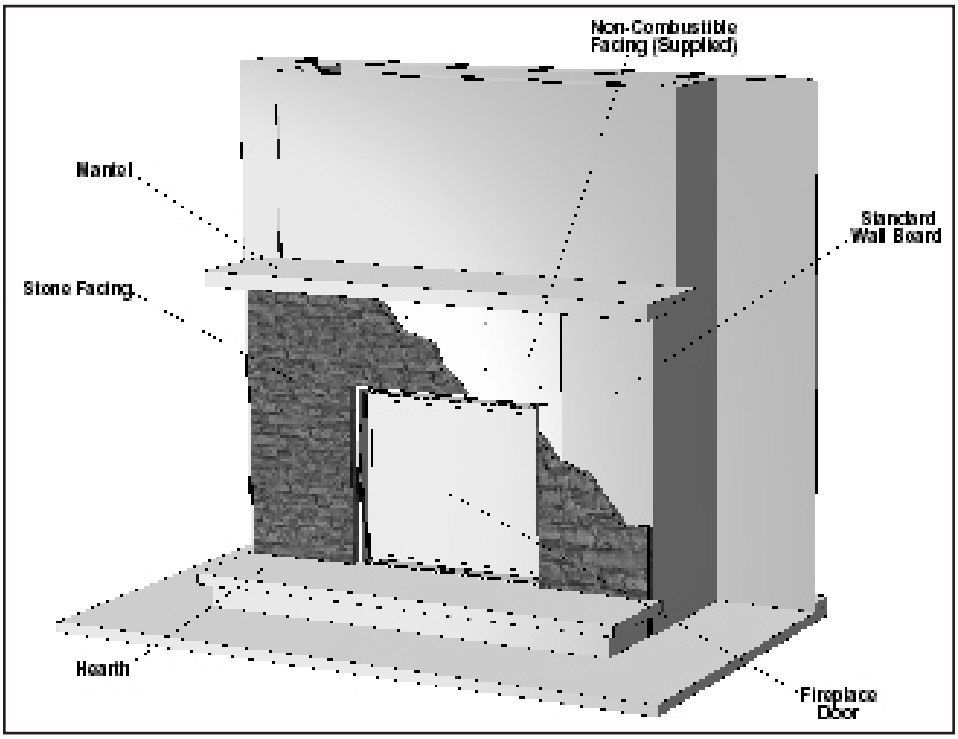

Figure 16. Typical Facing for the Fireplace - General.

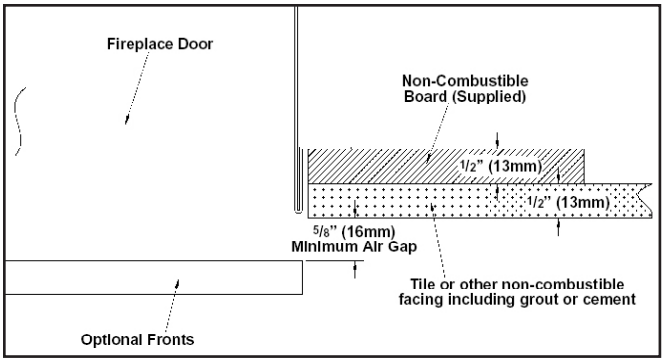

Figure 17. Option 1 - Fireplace Facing Less Than 1" (25.4mm) Thick With Optional Front Installed.

There are a number of optional fronts available for use with the DV48. These fronts lift on and off of the fireplace, providing access to the fireplace for regular maintenance and service.

You have 3 possible scenarios when installing facing to your fireplace installation. Care must be taken to ensure proper clearances are maintained. Clearances are required between optional fronts and any stone work applied to your fireplace installation. Failure to maintain this clearance will lead to elevated operating temperatures and possible discoloration of materials and or fronts.

Three (3) possible installations include:

1) For fireplace facing less than 1" thick (total facing and non-combustible board combined) with an optional front installed.
2) For fireplace facing greater than 1" thick with an optional front installed.
3) For any fireplace facing without an optional front installed.

Figures 17 to 19 highlight the relationships between the fireplace, optional front, and facing installed.

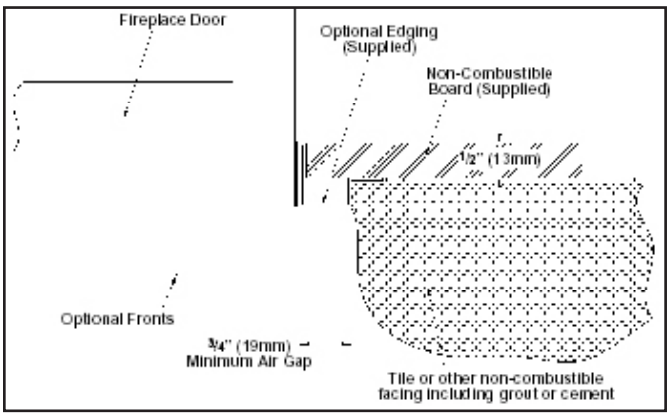

Figure 18. Option 2 - Fireplace Facing More Than 1" (25.4mm) Thick With Optional Fronts Installed.

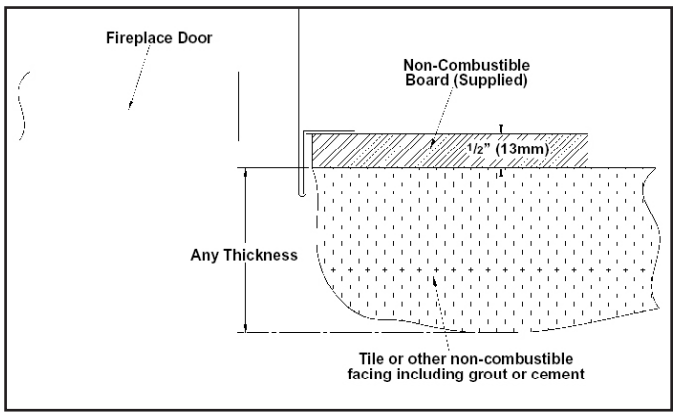

Figure 19. Option 3 - Any Fireplace Facing Without Optional Front Installed.

INSTALLATION OF OPTIONAL FACING TRIM:

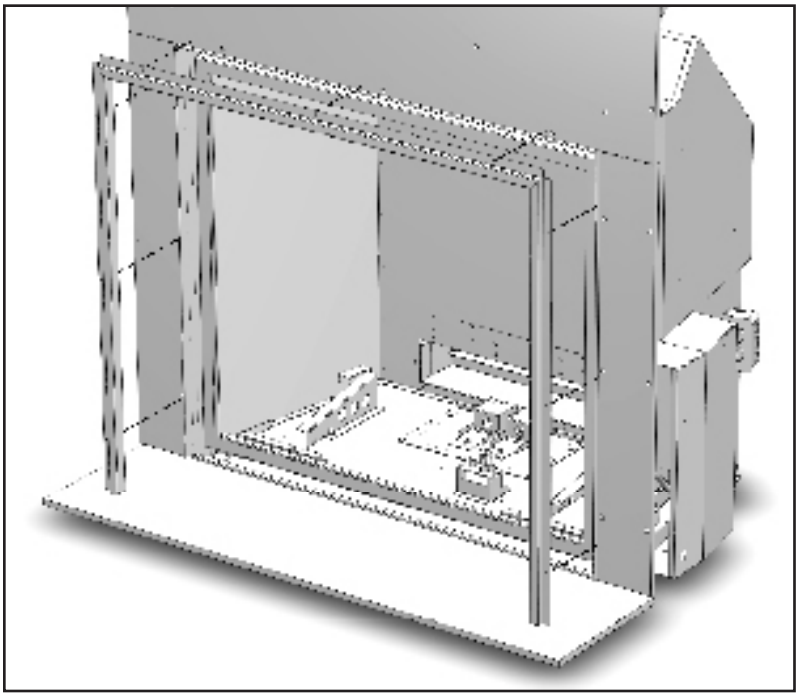

Figure 20. Optional Facing Trim Installation - General.

The Optional Facing Trim supplied with your fireplace is designed to fit between the supplied non-combustible board and the fireplace drywall flange.

IMPORTANT: When installing the wall board, leave a small gap between it and the fireplace drywall flange.

Insert the long side of the Right Trim into this gap and secure with drywall screws where holes are prvided. Complete it at the top and left edges. Other fireplace facing can then be installed over the exposed flange.

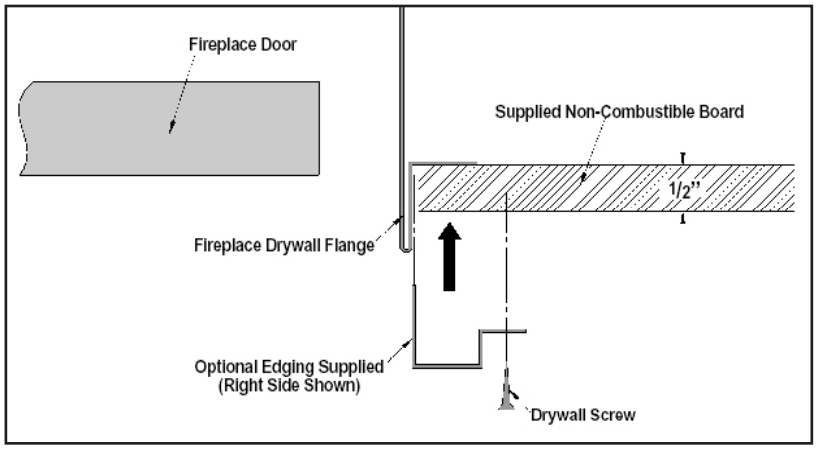

Figure 21. Optional Facing Trim Installation - Right Detail.

INSTALLATION OF RECEIVER:

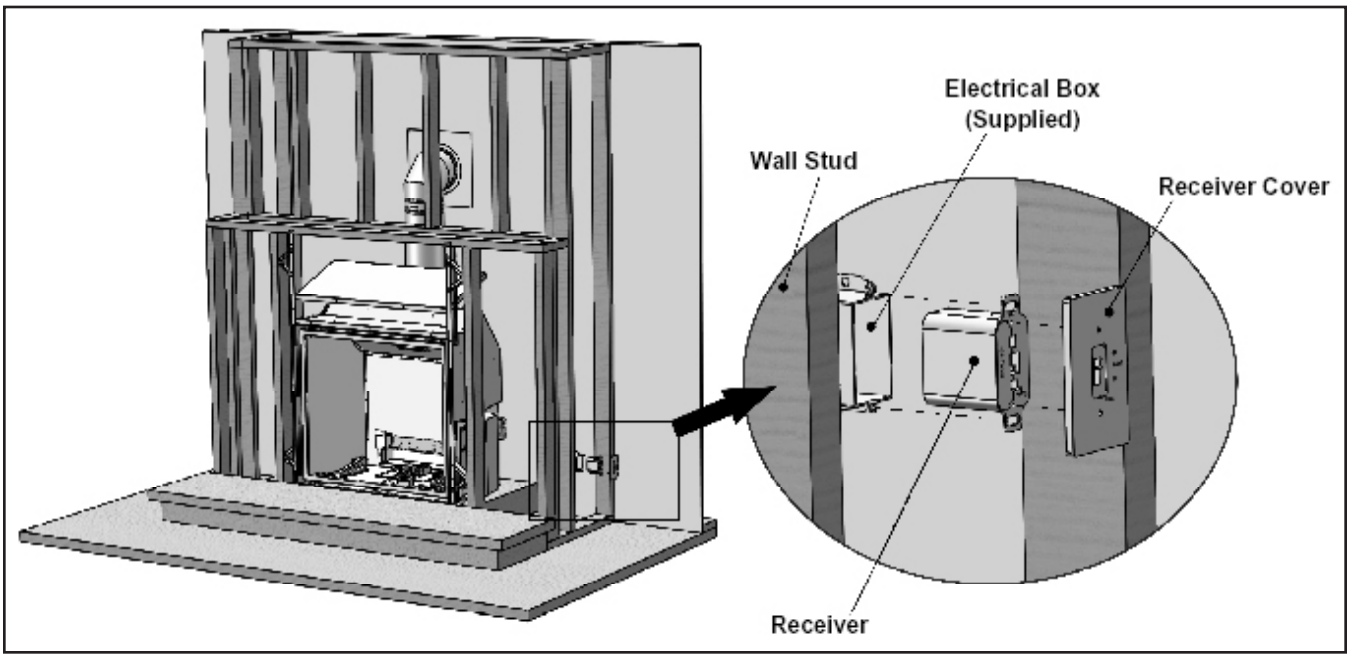

Figure 22. Receiver Installation.

The Receiver is the heart of the remote control system. You need to access this receiver after installation to change the batteries (for operation during a power failure), to program a new remote / receiver combination and to operate a manual override should you lose your remote control or the batteries in the remote control lose their power.

The Receiver is connected to the fireplace with a wire harness that has a maximum length of 8 ft (2.4m). The connection point on the fireplace is on the right side of the unit, where the gas valve and electronic ignition module is located. Because of the 8 ft (2.4m) limitation in the wiring harness, the receiver needs to be mounted to the right side of the fireplace. An electrical box is provided for the receiver. Mount this electrical box as you would any electrical outlet or switch box. Thread the cable and connector through the back of the electrical box and connect it to the rear of the receiver. Secure the receiver into the electrical box. Once the facing of the fireplace installation is complete, install the receiver cover, supplied with the unit as shown. The receiver cover also functions as a switch plate and allows for access to the program button, critical for remote control operation.

Review the section in this manual regarding the remote control operations for more information on the functions of the receiver.

ALLOWABLE VENT CONFIGURATIONS:

The vent chart, in Figure 23, illustrates the vent configurations that have been tested and approved for use with this appliance. 45° elbows are acceptable for this installation and may be used instead of 90° elbows. You may use two (2) 45° elbows for every 90° elbow shown in this chart.

This appliance is also approved for use with 5" x 8" flex venting. For durability, safety and resistance to corrosion, we recommend you use a flex venting made from stainless steel. Only use flexible venting that is approved for fireplace applications. Flex vent runs must comply with the same limitations as the rigid vent chart shown here. Flexible vent runs greater than 8' total are not recommended. Mixed vent runs of both Flexible and rigid venting are allowed providing all the proper connectors are utilized. See your vent providers' catalogue for flex to rigid or rigid to flex adaptor numbers.

The restrictor settings shown in Figure 23, are recommended. Installation factors such as altitude, prevailing weather conditions such as temperature or wind, or the number of elbows used may affect your final restrictor settings. Insufficient restriction may cause pilot outages or reduced efficiencies. Too much restriction may lead to elevated operating temperatures, poor flame appearances, sooting or carbon deposits building up on burner effects or window glass.

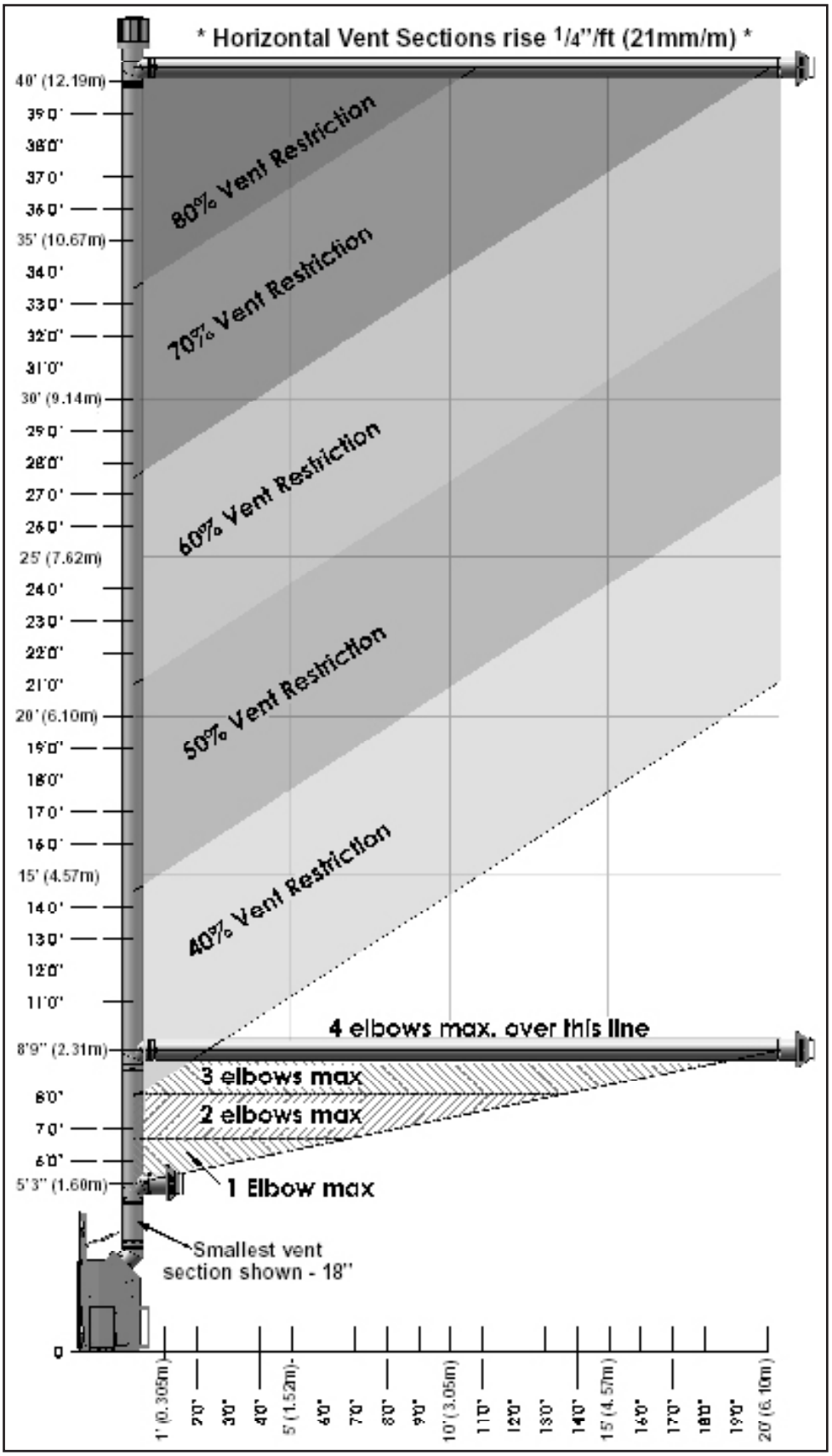

Figure 23. Allowable Vent Configurations Chart.

Only use the restrictors supplied with this appliance.

Table 1: Vent Restrictor Sizes.

% Restriction	Ø of Flue Restrictor
40%	3.878" (98.5mm)
50%	3.540" (89.9mm)
60%	3.166" (80.4mm)
70%	2.742" (69.6mm)
80%	2.239" (56.9mm)

VENT TERMINATION RESTRICTIONS:

QUALIFIED INSTALLERS ONLY

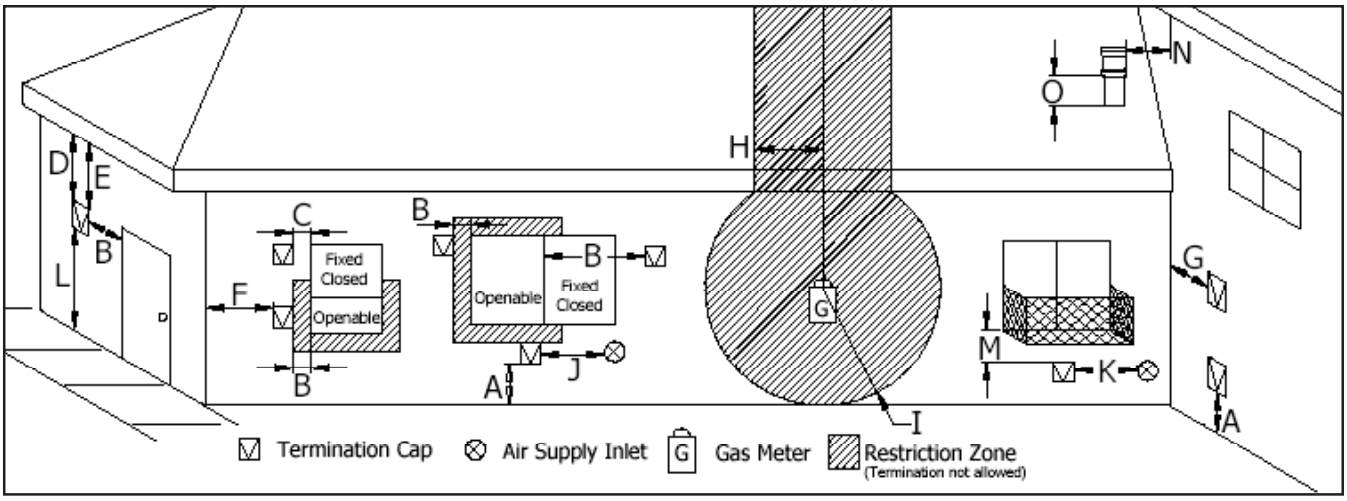

Figure 24. Vent Termination Restrictions, refer to Table 2.

Table 2: Vent termination clearances, refer to Figure 24.

Letter	Canadian Installation [1]	US Installation[2]	Description
A	12 in (30 cm)		Clearance above grade, verandah, porch, deck, or balcony.
B	12 in (30 cm)	9 in (23 cm)	Clearance from window or door that may be opened.
C	12 in (30 cm)*		Clearance from permanently closed window (to prevent condensation).
D	19¼ in (49 cm)		Vertical clearance to ventilated soffit located above the terminal, within a horizontal distance of 2 ft (60 cm) from center line of terminal.
E	19¼ in (49 cm)		Clearance to unventilated soffit.
F	17¼ in (44 cm)*		Clearance to outside corner.
G	17¼ in (44 cm)		Clearance to inside corner.
H	3 ft (91 cm) within a height of 15 ft (4.5 m) above the meter/regulator assembly	3 ft (91 cm) within a height of 15 ft (4.5 m) above the meter/regulator assembly*	Clearance to each side of center line extended above meter/regulator assembly.
I	3 ft (91 cm)	3 ft (91 cm)*	Radial clearance around service regulator vent outlet.
J	12 in (30 cm)	9 in (23 cm)	Clearance to non-mechanical air supply inlet to building, or the combustion air inlet to any other appliance.
K	6 ft (1.83 m)	3 ft (91 cm) above if within 10 ft (3 m) horizontally	Clearance to mechanical air supply inlet.
L	7 ft (2.13 m)[t]	7 ft (2.13 m)*[t]	Clearance above paved sidewalk or paved driveway located on public property.
M	19¼ in (49 cm)[+]		Clearance under verandah, porch, deck, or balcony.
N	12 in (30 cm)*		Clearance horizontally to any surface (such as an exterior wall) for vertical terminations.
O	12 in (30 cm)		Clearance above roof line for vertical terminations.

[1] In accordance with the current CSA B149, Natural Gas and Propane Installation Code.
[2] In accordance with the current ANSI Z223.1 NFPA 54, National Fuel Gas Code.
* These numbers are only estimates. Clearance in accordance with installation codes and the requirements of the gas supplier.
[t] A vent shall not terminate directly above a side walk or paved driveway that is located between two single family dwellings and it serves both dwellings.
[+] Permitted only if verandah, porch, deck, or balcony is fully open on a minimum of two sides beneath the floor.

NOTE: Venting terminals shall not be recessed into walls or siding.

APPROVED VENT PARTS:

Table 3: Vent part numbers (Must state if galvanized or black wanted, PART NUMBERS).

Part Description	Simpson Duravent	Security Chim.	American Metal	Selkirk Int.	Metal-Fab	EXCELDirect
6" Pipe Length	58DVA-06	SV5L6	5D7	5DT-06	5D6	TC-5DL6
9" Pipe Length	58DVA-09			5DT-09		
12" Pipe Length	58DVA-12	SV5L12	5D12	5DT-12	5D12	TC-5DL1
24" Pipe Length	58DVA-24	SV5L24	5D2	5DT-24	5D24	TC-5DL2
36" Pipe Length	58DVA-36	SV5L36	5D3	5DT-36	5D36	
48" Pipe Length	58DVA-48	SV5L48	5D4	5DT-48	5D48	TC-5DL4
60" Pipe Length	58DVA-60					
8 ½" Pipe Extension	58DVA-08A	SV5LA12(12")	5D7A 5D12A	5DT-AJ12	5DAL	
16" Pipe Extension	58DVA-16A	SV5LA24(24")	5D16A 5D26A			
Flexible Length, 36"						TC-5DLF
12" Adjustable Length						TC-5DLT
45° Elbow	58DVA-E45	SV5E45	5D45L	5DT-EL45	5D45L	TE-5DE45
90° Elbow	58DVA-E90	SV5E90	5D90L	5DT-EL90	5D90L	TE-5DE90
Roof Flashing	58DVA-F6	SV5F / SV5FA / SV5FB	5DF12	5DT-AF6 5DT-AF12	5DF	XF-6EF / XF-6EFA /XF-6EFB
Storm Collar	58DVA-SC	SV5FC	5DSC	5DT-SC	5DSC	TM-SC
Ceiling Firestop	58DVA-FS	SV5BF	5DFSP	5DT-FS		TM-5CS
Wall Firestop	58DVA-WFS				5DFS	
Wall Thimble	58DVA-WT	SV5RMS	5DWT	5DT-WT	5DWT	TM-5WT
Horiz. Square Termination	58DVA-HC-*	SV5CHC	5DHCS	5DT-HC	5DHT	TM-5HT/TM-5DHT
Horiz. Round Termination			5DHC			
Horizontal Sconce Termination						
Vert. Termination, High Wind	58DVA-VCH	SV5CGV	5DVC	5DT-VT	5DVT	
Vinyl Siding Standoff	58DVA-VSS	SV5VS	5DHVS	5DT-VS	5DVS	TM-VSS
Flex Venting 5" and 8"	Duraflex					

***Several color choices**

IMPORTANT: This chart covers the major components for each of these manufacturers only. Refer to the manufacturers' catalogue for further details on roof flashings and other installation items

The DV48 fireplace has been tested and certified for use with AMERICAN METAL PRODUCTS "AMERIVENT DIRECT", SIMPSON DURAVENT TYPE GS PIPE FOR GAS STOVES. SECURITY CHIMNEY'S "SECURE VENT DIRECT VENT SYSTEM", SELKIRK "DIRECT-TEMP VENT SYSTEM", and EXCELDIRECT "ICC" kits are available for horizontal and vertical venting. When planning an installation, it will be necessary to select the proper length of vent pipe for the particular requirements.

WARNING: Do not mix parts from different vent manufacturers' systems.

EXCEPTION TO WARNING: This product has been evaluated by Intertek for using a Direct Vent GS starting collar in conjunction with Secure Vent, Direct-Temp, and Ameri Vent Direct venting systems. Use of these systems with the Direct Vent GS starting collar is deemed acceptable and does not affect the Intertek WH listing of the appliance.

Table 4: Approved Vent Manufacturers

Manufacturer	Trade Name	Nominal Sizes
American Metal Products	AmeriVent Direct	5" x 8"
Security Chimneys International LTD	Secure Vent	5" x 8"
Selkirk Metalbestos	Direct-Temp	5" x 8"
Simpson Dura-Vent	Direct Vent GS	5" x 8" Co-axial Vent
EXCELDirect	ICC	5" x 8"

INSTALLATION OF FLUE RESTRICTOR:

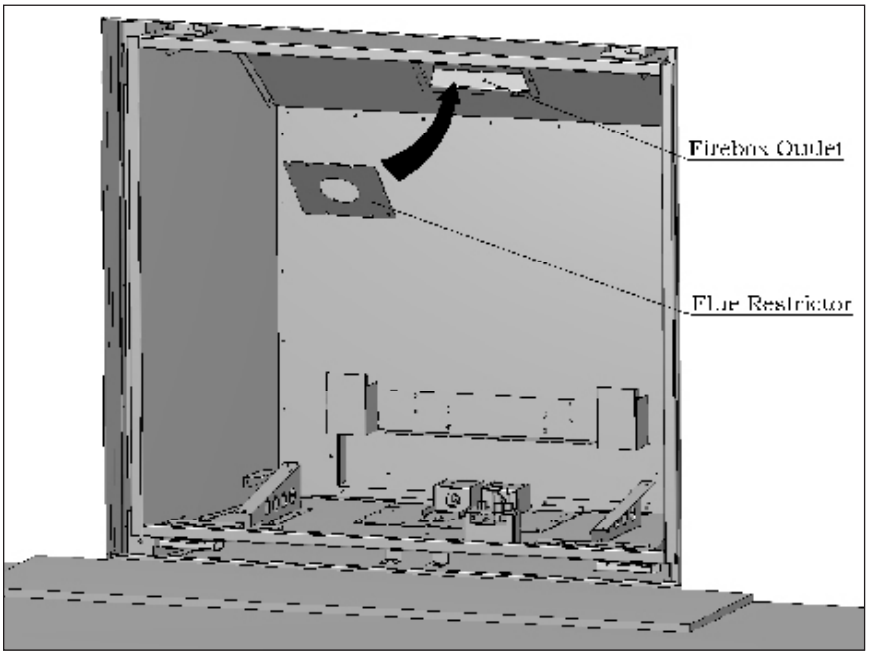

Figure 25: Installation of Flue Restrictor.

Flue Restrictors are necessary to keep the fireplace running at its intended efficiency. They are also required to counteract the effect that taller vertical vent runs may have on the appliance. The additional venting action that tall vertical vent systems may have can result in poor pilot and/or burner operations and possibly nuisance shut downs. Generally, the vent restriction may be less than what is shown in the vent chart, but not greater. The vent restrictor size is shown in percentages, meaning that a 40% restrictor restricts the vent 40% from its fully un-restricted vent size.

1) Remove the Glass Door; refer to DOOR REMOVAL AND INSTALLATION.

2) Remove the Burner and/or Log Set; refer to BURNER REMOVAL AND INSTALLATION.

3) Remove the firebox liners; refer to FIREBOX LINER INSTALLATION.

4) Refer to the Vent Chart (Figure 23) for selection of the appropriate Restrictor.

5) Using the two (2) ¼" T-20 screws provided with the restrictor, fasten the Restrictor into the Flue Outlet as shown in Figures 25 & 26. Make sure the diagonal holes line up with the diagonal holes located in the Flue Outlet Box Use a powered driver to drive the screw in. Be careful not to over-torque the screw and strip the threads.

6) Re-install the Light Covers, Firebox Liners, Burners and log sets and the Glass Door.

7) Run the unit for ½ hour to check for proper operations and flame appearance.

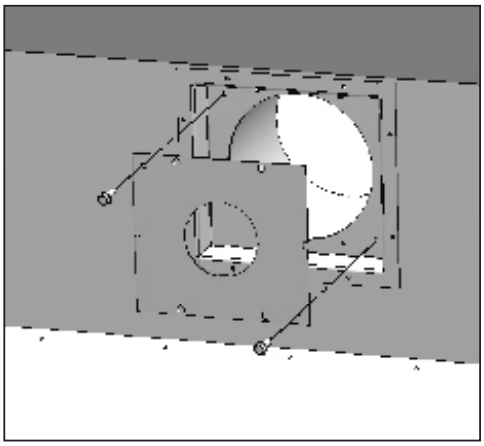

Figure 26: Installation of Flue Restrictor - Close-Up.

TV INSTALLATION ABOVE UNIT:

During the development of the DV48, we took into consideration that in some installations TV's or flat panel monitors may be located above the mantel. Although we can not anticipate every possible installation variable, we took time to evaluate the suitability of the installation of a TV or Plasma display above the mantel. We carried out testing to evaluate what possible operating temperatures that may be experienced when the appliance was installed in an internal chase. A mantel was installed with the maximum overhang at the minimum allowable installation height, with a full 13" (330mm) shelf installed over the unit (see section NON-COMBUSTIBLE MATERIAL ZONE). The area above the mantel, within 4 inches (102mm) of the wall was measured under maximum operating conditions and found to not exceed 120°F (49°C). Variations of mantel overhangs, shelf depths or ceiling heights will affect this temperature. Please refer the TV owner's manual for information on acceptable operating conditions. Care must be taken to evaluate your specific installation and operating conditions when deciding to install electronic equipment above or near this appliance when it is in operation. Always consult your TVs owner's manual to ensure that this application is an approved installation.

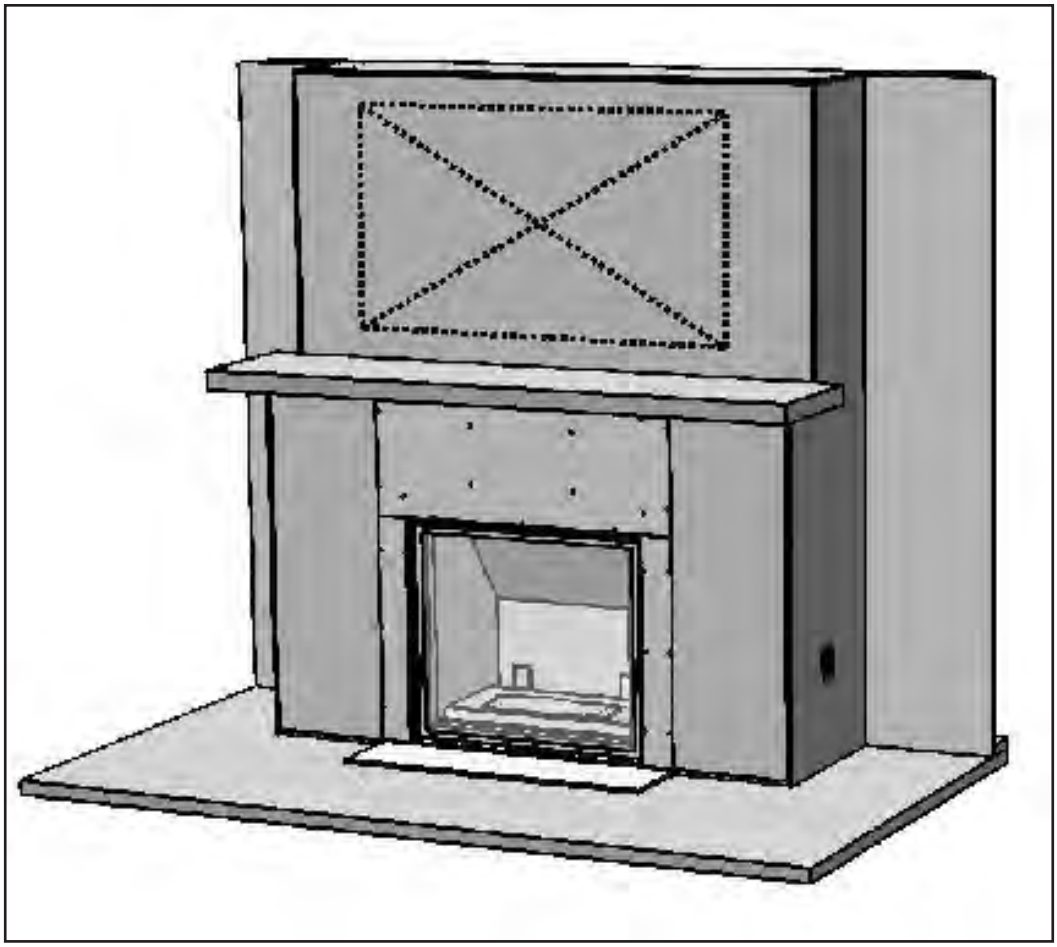

Figure 27: Installation of TV Above the Unit.

Installation Set-Up

QUALIFIED INSTALLERS ONLY

Planning Your Installation:

Prior to starting your venting installation, refer to the section on Allowable Vent Configurations to make sure your plans fall into the allowable limits of horizontal and vertical installations.

When planning your installation, it will be necessary to select the proper length of vent pipe for your particular requirements. For horizontal installations, refer to the section on Clearances to Combustibles to determine the minimum clearance from the rear of the appliance to the wall. It is also important to note the wall thickness. Select the amount of vertical rise desired for "vertical-to- horizontal" type installations. To determine the length of vent pipe required for vertical installations, measure the distance from the appliance flue outlet to the ceiling, the ceiling thickness, the vertical rise in an attic or second story, and allow for sufficient vent height above the roofline. For two-story applications, firestops are required at each floor level. If an offset is needed in the attic, additional pipe and elbows will be required.

Assembly of the Unit:

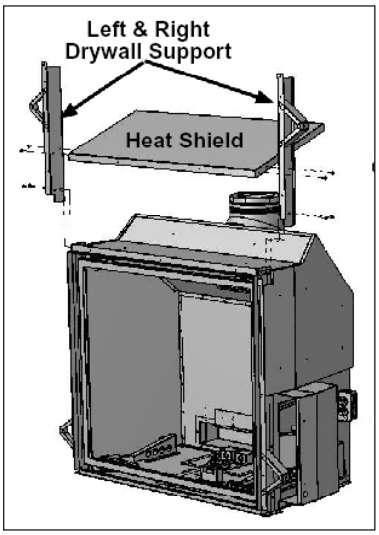

Figure 28: Installation of Supports & Heat shield.

1. Using eight (8) T-20 screws provided, install the drywall supports right and left as well as the heat shield in the middle, as shown in Figure 28.
2. Using eight (8) T20 screws provided, attach both back stand-offs, as shown in Figure 29.

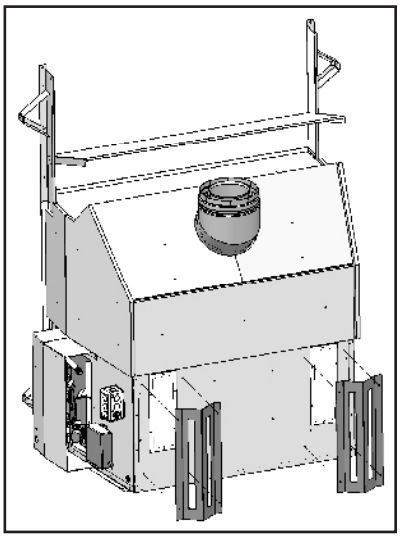

Figure 29: Installation of Back Stand-Offs.

Securing unit into Position:

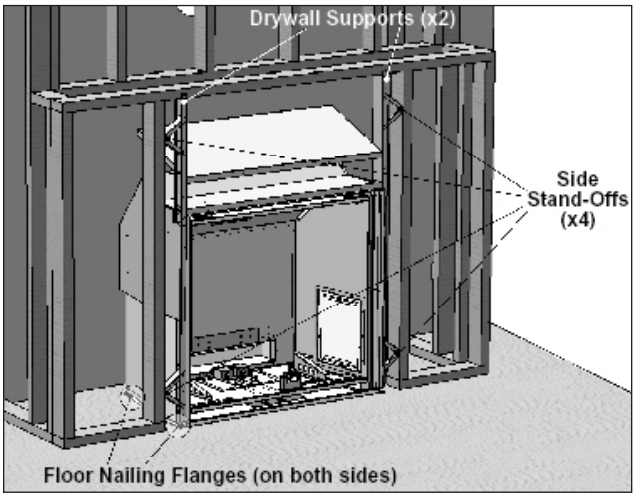

Figure 30: Securing the Unit.

Once the unit is in its final position, confirm that you have access to power, gas supply, that your non-combustible zone requirements are met, that you meet all the minimum vent requirements, and that your planned vent terminal location will meet all of the vent termination clearances. Secure the unit to the floor, with at least four (4) wood screws, two (2) on either side of the unit's bottom nailing flange. Secure the side stand-offs to the framing members using four (4) wood screws, one (1) for each stand-off and to the header, one (1) wood screw for each drywall support.

QUALIFIED INSTALLERS ONLY

INSTALLATION OF NON-COMBUSTIBLE WALL AND HEARTH BOARD:

Install the non-combustible wall board and hearth protector provided with the unit. The side boards are interchangeable and are secured with drywall screws (¾" screws provided), three (3) to each side of the unit and three (3) to each side frame member. The top board is secured with three (3) drywall screws along the top frame (header), three (3) along the top nailing flange of the unit and two (2) on each vertical frame member. Also secure the top wall board to the heat shield behind it with two (2) screws and each drywall support upright with two (2) screws. See the section on hearth installation for installing the hearth protector, required with the installation of this unit. All the screws required to attach the wall board sides and top to the unit have corresponding holes already located on the units nailing flanges, drywall supports and heat shield.

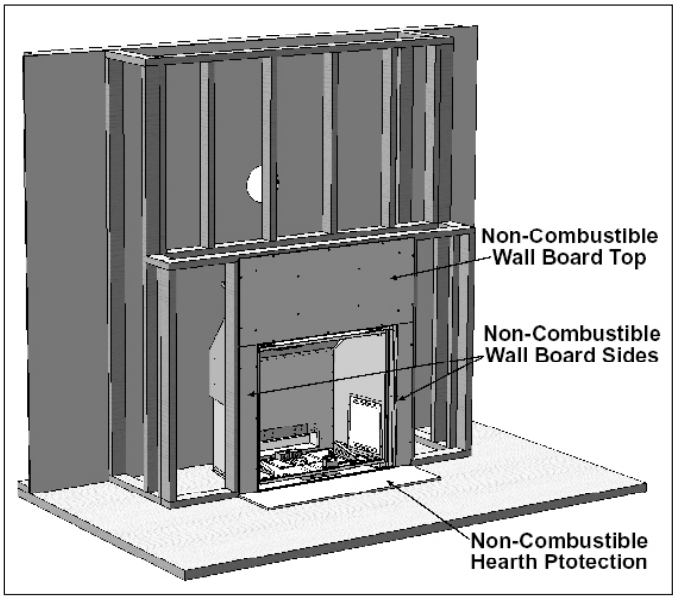

Figure 31: Installation of Wall & Hearth Board.

INSTALLATION OF VENTING AND TERMINATIONS:

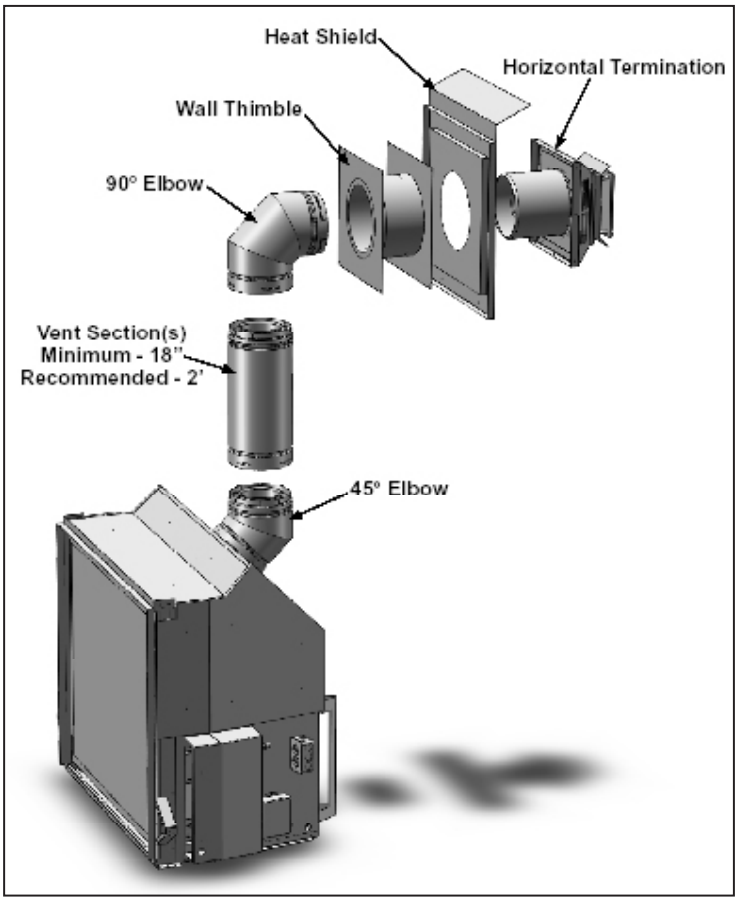

Figure 32: Typical Minimum Vent Configurations - Horizontally Terminated.

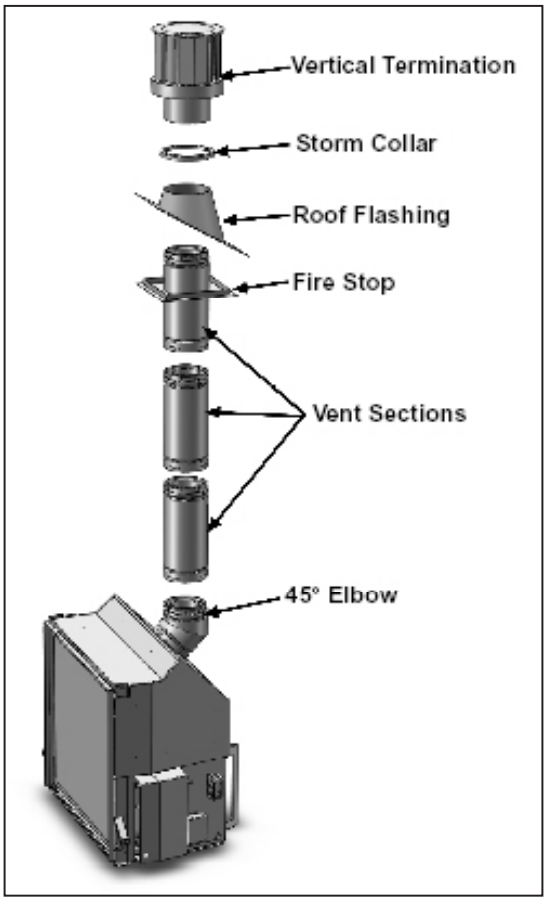

Figure 33: Typical Vent Configurations - Vertically Terminated.

Installation Set-Up

Read all instructions carefully before starting the installation. Failure to follow these instructions may create a fire or other safety hazard, and will void the warranty.

INSTALLATION PRECAUTIONS:

- Do not install any damaged venting or vent components.
- Do not modify any vent or termination component.
- Do not install any vent component that is not an approved vent component for this appliance.
- Do not use any instructions other that those included in this manual or those included by the vent component manufacturer with the venting. When there are discrepancies between the two, this manual will be considered the final authority.

Consult your local building codes before beginning the installation.

WARNING

- **Always maintain required clearances (air spaces) to nearby combustibles to prevent a fire hazard. Do not fill air spaces with insulation. Unless stated otherwise, clearances on horizontal vent sections are 2" (51mm) to combustible materials. Clearances to vertical vent sections are 1" (25mm) to combustible clearances.**
- **The fireplace and vent system must be vented directly to the outside of the building. Each direct vent fireplace must use its own separate vent system. Common vent systems are prohibited.**
- **The flow of combustion and ventilation air not be obstructed.**

Horizontal Installation:

Step 1. Set the fireplace in its desired location. Check to determine if wall studs or roof rafters are in the way when the venting system is attached. If this is the case, you may want to adjust the location of the appliance.

Step 2. Direct Vent pipe and fittings are designed with special twist-lock connections. Assemble the desired combination of pipe and elbows to the appliance. See the sections on Typical Framing - Internal Chase, External Chase or Corner Installation for some of the possible vent pathway options. All installations must fall within the Allowable Vent Configurations shown in Figure 20.

Notes:

(1) Twist-lock procedure: Four (4) indentations, located on the female ends of pipes and fittings, are designed to slide straight onto the male ends of adjacent pipes and fittings, by orienting the four pipe indentations so they match and slide into the four (4) entry slots on the male ends. Push the pipe sections completely together, then twist-lock one section clockwise approximately one-quarter turn, until the two (2) sections are fully locked.

(2) Horizontal runs of vent must be supported every 3 feet (915mm). Wall Straps are available for this purpose.

(3) Sealant is only necessary on the outer tube of the GS Pipe. Run a ⅛ inch (3mm) wide bead of sealant around the male end of the outer sleeve, as shown in Figure 34, and twist-lock the pipes or fittings together.

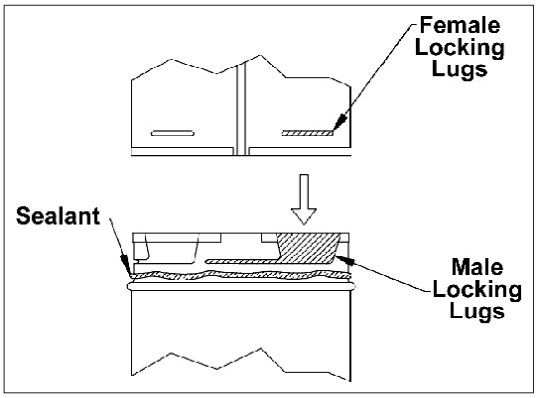

Figure 34: Twist-Lock Connection.

Step 3. With the adaptor and pipe attached to the fireplace, slide the fireplace into its correct location, and mark the wall for a square hole of the appropriate size. Use 11"x11" (280x280mm) square hole for 8" x 5" pipe. The center of the square hole should line up with the centerline of the horizontal pipe, as shown in Figure 35. Cut and frame the square hole in the exterior wall where the vent will be terminated. If the wall being penetrated is constructed of non-combustible material, i.e. masonry block or concrete, a hole with zero clearance to the pipe is acceptable.

Notes:

(1) Any horizontal run of vent must have a ¼ inch (6mm) rise for every 1 foot (305mm) of run towards the termination. Never allow the vent to run downward. This could cause high temperatures and may present the possibility of a fire.

(2) The location of the horizontal vent termination on an exterior wall must meet all local and national building codes, and must not be easily blocked or obstructed. Termination clearances must comply with the VENT TERMINATION RESTRICTIONS section.

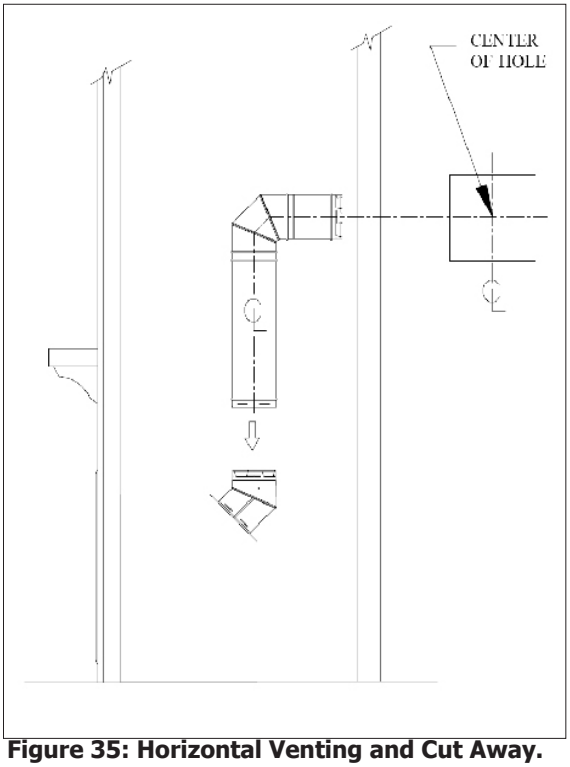

Figure 35: Horizontal Venting and Cut Away.

Step 4. For a Square Horizontal Vent Termination, place the vent cap in the center of the square hole and attach to the exterior wall with the four wood screws provided (refer to Figure 36). Before attaching the Vent Termination to the exterior wall, run a bead of non-hardening sealant around its outside edges, so as to make a seal between it and the wall. If you are using a Round Horizontal Vent Termination, place an exterior Wall Firestop over the square hole. Run a bead of non-hardening sealant around the edges of the Wall Firestop, and attach the Wall Firestop to the wall with the four wood screws provided. The arrow on the vent cap should be pointing up. Ensure that proper clearances to combustible materials are maintained.

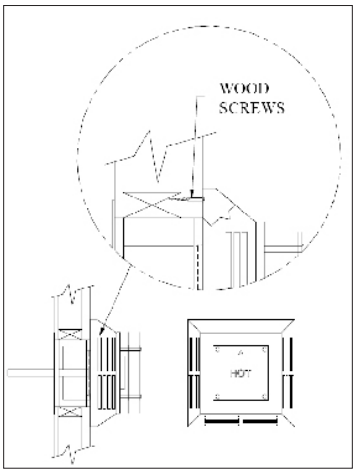

Figure 36: Fastening Horizontal Termination Cap in Place.

Notes:

(1) The four (4) wood screws provided should be replaced with appropriate fasteners for stucco, brick, concrete, or other types of sidings.

(2) For buildings with vinyl siding, a Vinyl Siding Standoff should be installed between the vent cap and the wall (see Figure 37). Attach the Vinyl Siding Standoff to the Horizontal Vent Termination. The Vinyl Siding Standoff prevents excessive heat from possibly melting the vinyl siding material. Note that the Square Horizontal Vent Termination bolts onto the flat portion of the Vinyl Siding Standoff, (Shaded area shown in Figure 37), so that an air space will exist between the wall and the Vent Termination.

Step 5. Before connecting the horizontal run of vent pipe to the vent termination, slide the Wall Firestop over the vent pipe on the interior side of the wall.

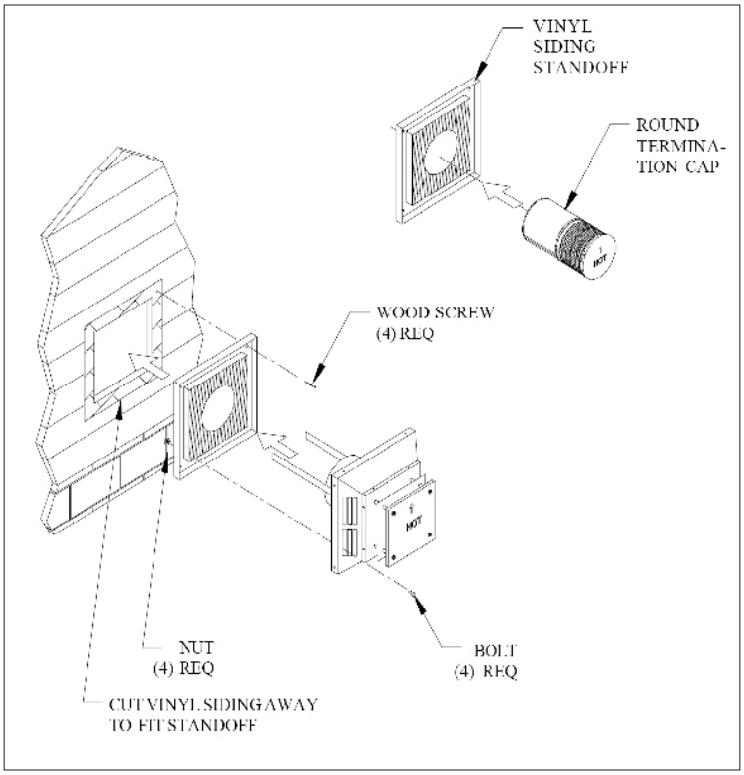

Figure 37: Installation of Vinyl Siding Standoff.

Step 6. Slide the appliance and vent assembly towards the wall, carefully inserting the vent pipe into the vent cap assembly. It is important that the vent pipe extend into the vent cap sufficient distance so as to result in a minimum pipe overlap of 1¼ inches (32mm). Secure the connection between the vent pipe and the vent cap. For square caps, attach the two (2) sheet metal strips extending from the vent cap assembly into the outer wall of the vent pipe. Use the two sheet metal screws provided to connect the sheet metal strips to the pipe section. For round caps, use three sheet metal screws and attach cap to pipe section (see Figure 38).

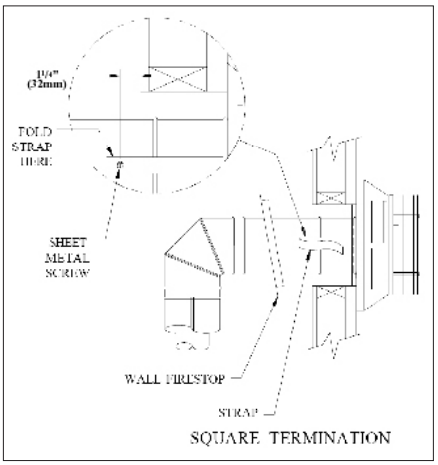

Figure 38: Installation of Vent Pipe to Termination.

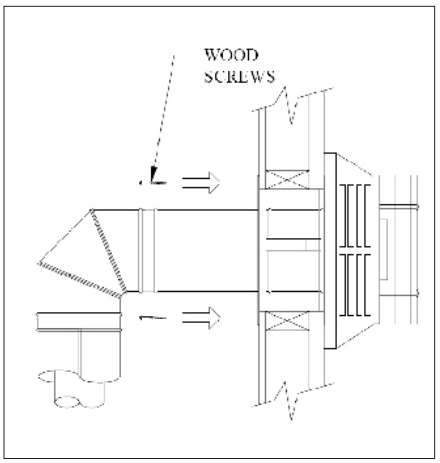

Figure 39: Installation of Wall Firestop.

Step 7. Slide the Wall Firestop up to the wall surface and attach with screws provided (see Figure 39).

VERTICAL TERMINATION INSTALLATION:

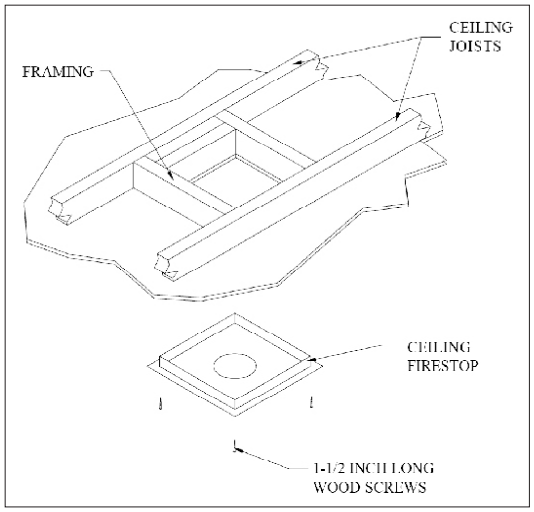

Figure 40: Installation of Ceiling Firestop.

Step 1. Maintain clearances between venting and combustible building materials as stated earlier in this section. Do not pack air spaces with insulation. Check with the Allowable Vent Configurations page when planning your installation to ensure the vertical and horizontal elements of your installation are within these limits.

Step 2. Set the fireplace in its desired location. Drop a plum bob down from the ceiling to the position of the appliance flue exit, and mark the location where the vent will penetrate the ceiling. Drill a small hole at this point. Next, drop a plumb bob from the roof to the hole previously drilled in the ceiling, and mark the spot where the vent will penetrate the roof. Determine if ceiling joists, roof rafters, or other framing will obstruct the venting system. You may wish to relocate the appliance, or to offset, to avoid cutting load bearing members.

Step 3. To install the Ceiling Firestop in a flat ceiling, cut a square hole in the ceiling 11"x11" (280x280mm) square for 8" x 5" pipe, centered on the hole drilled in Step 2. Frame the hole as shown in Figure 40.

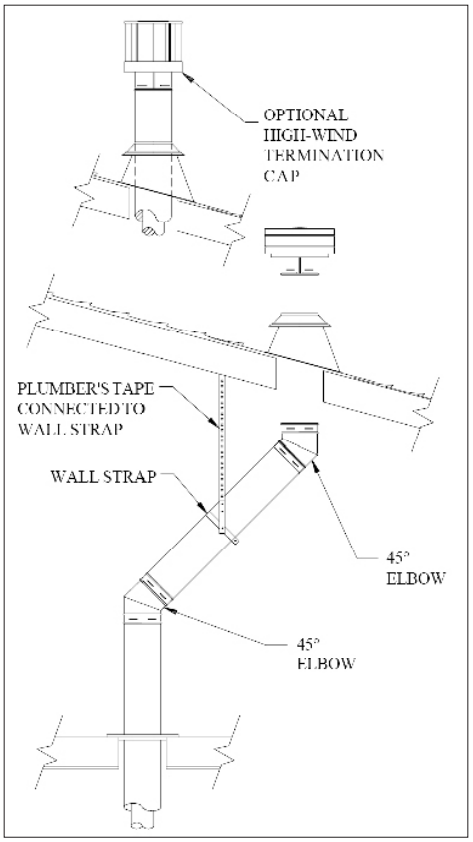

Figure 41: Vertical Installation using.

Step 4. Assemble the desired lengths of galvanized Pipe and Elbows necessary to reach from the Appliance Adaptor up through the Ceiling Firestop. Ensure that all Pipe and Elbow connections are in their fully twist-locked position.

Step 5. Cut a hole in the roof centered on the small drill hole placed in the roof in Step 2. The hole should be of sufficient size to meet the minimum requirements for clearance to combustibles, as specified earlier. Continue to assemble lengths of Pipe and Elbows necessary to reach from the Ceiling Firestop up through the roof line.

Notes:

(1) If an offset is necessary in the attic to avoid obstructions, it is important to support the vent pipe every 3 feet, to avoid excessive stress on the Elbows, and possible separation. Wall Straps are available for this purpose (see Figure 41).

(2) Whenever possible, use 45° Elbows, instead of 90° Elbows. The 45° Elbow offers less restriction to the flow of flue gases and intake air.

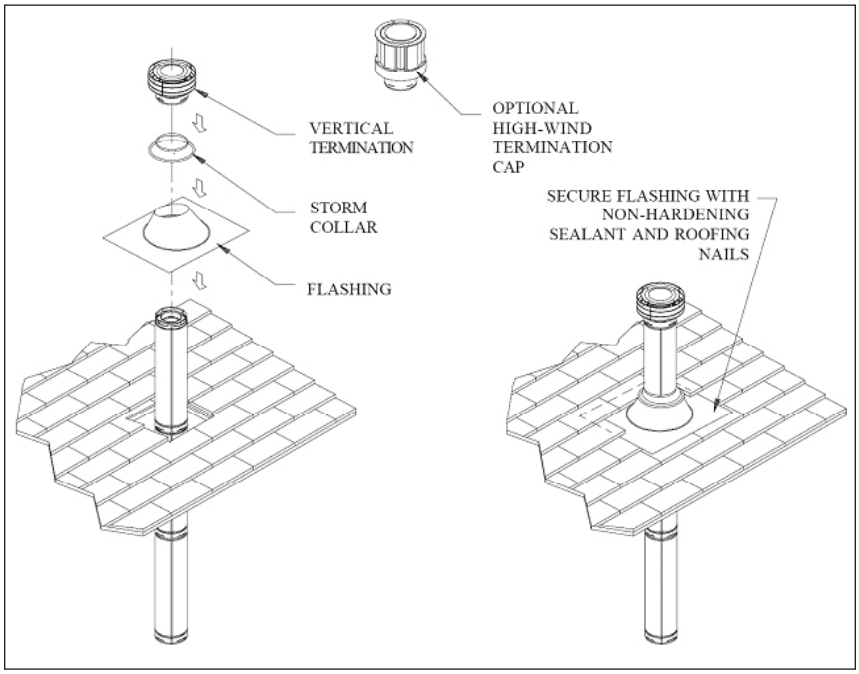

Figure 42: Installation of Flashing & Vertical Termination.

Step 6. Slip the flashing over the Pipe Section(s) protruding through the roof. Use a non-hardening sealant between the Flashing and the roof to prevent water leakage. Secure the base of the Flashing to the roof with roofing nails. Ensure the roofing material overlaps the top edge of the Flashing as shown in Figure 42. Verify that you have at least the minimum clearance to combustibles at the roofline.

Step 7. Continue to add Pipe Sections until the height of the Vent Cap meets the minimum building code requirements described by your local codes. In the absence of local codes, make sure the terminal is 2 feet (610mm) above anything within 10 feet (3046mm) of the vent (refer to Figure 44 & Table 5 for clearances for different pitches). Note that for steep roof pitches, the vent height must be increased. In high wind conditions, nearby trees, adjoining rooflines, steep pitched roofs, and other similar factors can result in poor draft, or down-drafting. In these cases, increasing the vent height may solve this problem.

Step 8. Slip the Storm Collar over the Pipe, and push it down to the top of the Flashing, as shown in Figure 42. Use the non-hardening sealant above and below the joint between the Storm Collar and the Pipe.

Step 9. Twist lock the Vent Cap.

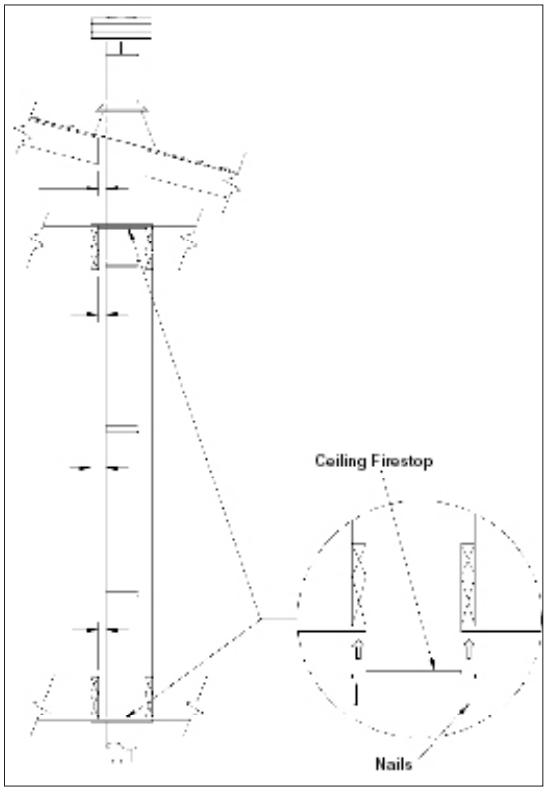

Figure 43: Installation of Ceiling Fire Stops.

Notes:

(1) For multi-story vertical installations, a Ceiling Firestop is required at any subsequent floors (as shown in Figure 43). The opening should be cut and framed in the same manner as the opening in Step 3 (see Figure 40).

(2) Any occupied areas above the first floor, including closets and storage spaces, which the vertical vent passes through, must be enclosed. The enclosure may be framed and sheet rocked with standard construction materials, however minimum allowable clearances between the outside of the vent pipe must be maintained. Do not fill any of the required air spaces with insulation.

Table 5: Minimum 'H' for Figure 44.

Roof Pitch	Minimum Height (H)	
	Feet	Meters
Flat to 7/12	1	0.3
Over 7/12 to 8/12	1.5	0.46
Over 8/12 to 9/12	2	0.61
Over 9/12 to 10/12	2.5	0.76
Over 10/12 to 11/12	3.25	0.99
Over 11/12 to 12/12	4	1.22
Over 12/12 to 14/12	5	1.52
Over 14/12 to 16/12	6	1.83
Over 16/12 to 18/12	7	2.13
Over 18/12 to 20/12	7.5	2.29
Over 20/12 to 21/12	8	2.44

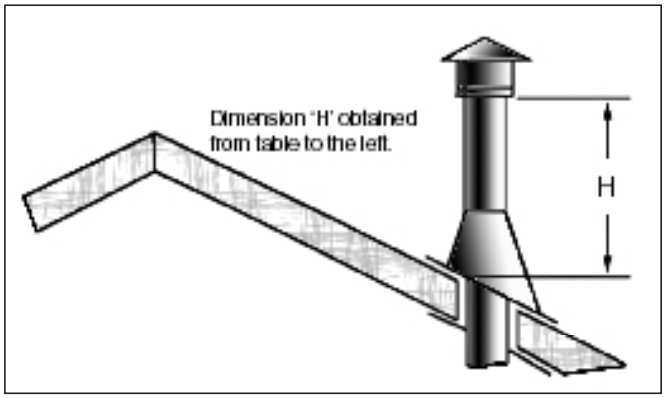

Figure 44: Height of Vertical Termination; Reference Table 5.

DOOR REMOVAL AND INSTALLATION:

1) The fireplace door is hung on two (2) hooks on the top of the firebox. The two (2) door latches at the bottom of the firebox hook over the tabs on the bottom of the door frame.
2) Lower the door latch tool underneath the door frame. Catch the lower door latch with the door latch tool (see Figure 45) and pull it out slightly, then down. Once the lower door latch clears the tab on the bottom of the door frame, release it inwards and then remove the door latch tool. Refer to Figures 47 & 48.
3) Pull the Door Frame at the bottom forward about 2" (5cm), then lift the Door Frame upwards to clear the Upper Door Hooks. Refer to Figures 48 & 49.

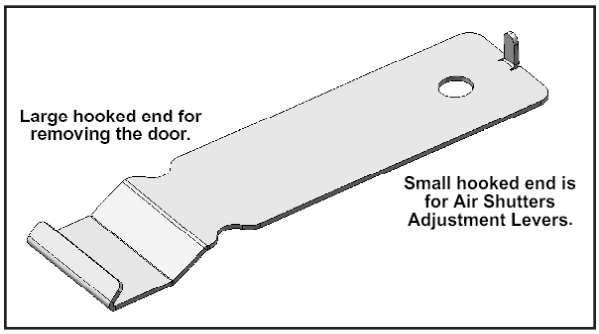

Figure 45: Door Latch /Air Adjustment Tool.

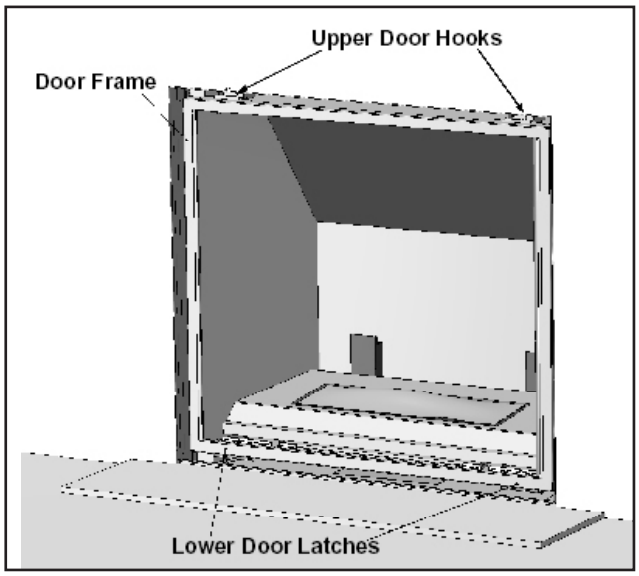

Figure 46: Door Latch Locations.

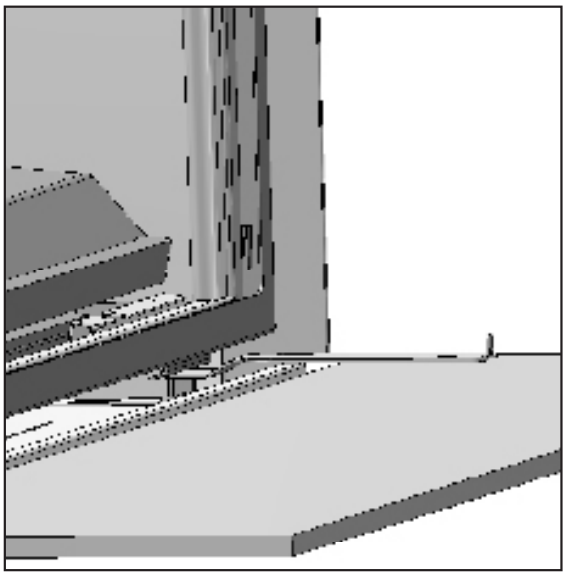

Figure 47: Door Latch Tool in Place.

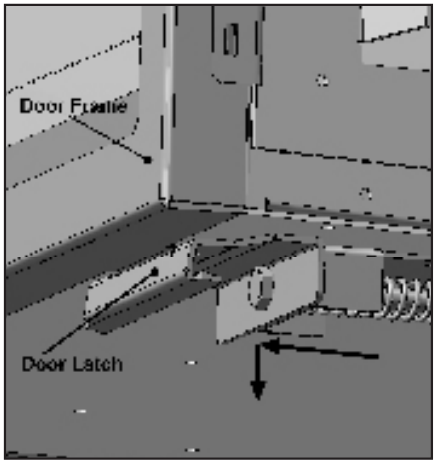

Figure 48: Door Latch Locations.

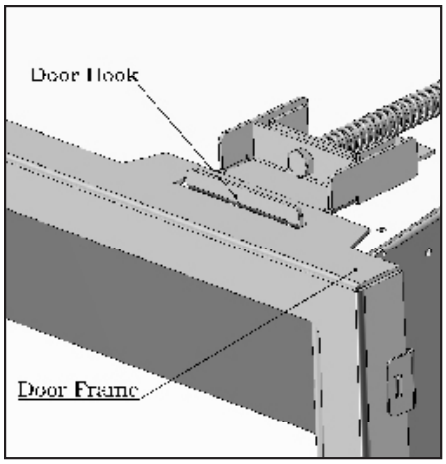

Figure 49: Top Door Hook.

4) Lift the Door Frame away, being careful that the glass panel is secure within the Door Frame.

GAS HOOK-UP:

The DV48 is equipped from factory with a ½" SAE 45° male gas fitting. This fitting will fit commonly used flexible gas supply lines.

If your local code requires you to use only rigid pipe for gas supply, remove the flare fitting provided. The gas line the flare fitting is fastened to is a ⅜" MPT.

You can then use a common union to provide the gas connection to the appliance.

The dimensions shown in Figure 50 are for your convenience if you have to hard pipe directly to the unit.

NOTES:

This appliance and its main gas valve must be disconnected from the gas supply piping system during any pressure testing of that system at test pressures in excess of ½ psi (35 kPa).

Isolate this appliance from the gas supply piping system by closing its equipment shutoff valve during any pressure testing of the gas supply piping system at test pressures equal to or less than ½ psi (3.5 kPa).

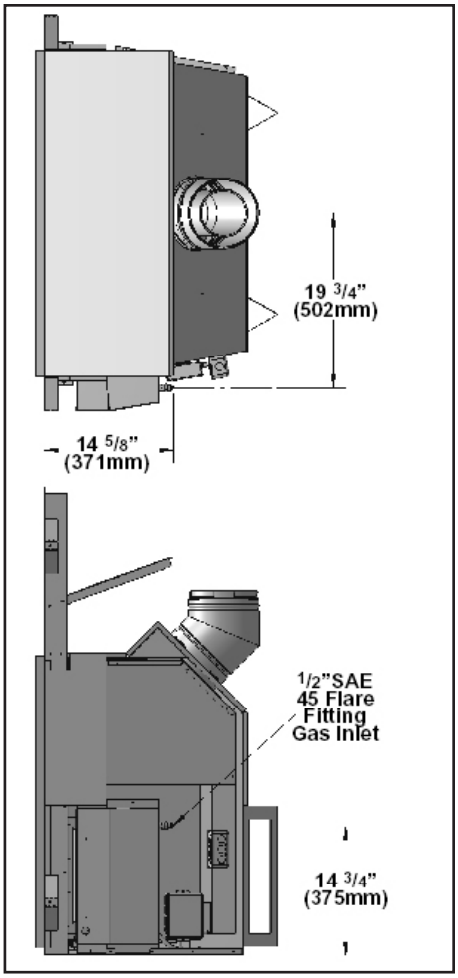

Figure 50: Location of Gas Hook-Up.

ELECTRICAL HOOK-UP:

An electrical junction box is provided and fastened to the right side of the fireplace. Power needs to be brought to the electrical junction box. The power for the various control components are all provided from the fan control module. Install the provided electric outlet and cover and plug the the fan control module into it. See the Rating Label for the listed electrical requirements.

When installed, the DV48, must be electrically grounded in accordance with local codes or, in the absence of local codes, with the National Electrical Code, ANSI/NFPA 70, or the Canadian Electrical Code, CSA C22.1.

WARNING
Electrical Grounding Instructions

This appliance is equipped with a three-prong (grounding) plug for your protection against shock hazard and should be plugged directly into a properly grounded three-prong receptacle. Do not cut or remove the grounding prong from this plug.

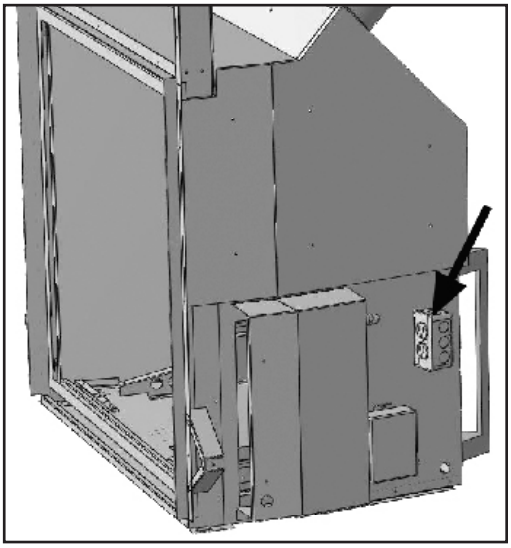

Figure 51: Location of Electrical Hook-Up.

LP GAS CONVERSION:

WARNING: This conversion kit shall be installed by a qualified service agency in accordance with the manufacturer's instructions and all applicable codes and requirements of the authority having jurisdiction. If the information in these instructions is not followed exactly, a fire, explosion or production of carbon monoxide may result causing property damage, personal injury or loss of life. The qualified service agency is responsible for the proper installation of this kit. The installation is not proper and complete until the operation of the converted appliance is checked as specified in the manufacturer's instructions supplied with the kit.

1. Ensure all the components of the conversion kit are accounted for. There should be a pilot orifice, left & right for the glass tray orifices, left & right for the log burner orifices, regulator diaphram, servo regulator, and conversion label.
2. If the unit has already been connected to a gas supply, shut off the gas supply to the unit.
2. If the unit has been run, shut off and allow cooling to room temperature.
3. Remove the fireplace door. (see DOOR REMOVAL AND INSTALLATION).
4. Remove the burner, burner accents and firebox liners. (see each applicable section in this manual)
5. The pilot hood is held in with spring pressure. Remove the hood by pulling it directly up from the pilot assembly (Figure 52).
6. Insert a 3/32" or 4mm Allen wrench into the top of the pilot orifice. Remove it by rotating it counter-clock wise until it is free of the pilot assembly (Figure 53).
7. Ensure that the pilot orifice you are about to install is the correct orifice. LP orifices have a groove cut around the top of the orifice. See Figure 54 for help to identify these parts. The orifice size is stamped into the orifice. The correct orifice sizes for the DV48 are **LPG - 35 and NG - 62.**
8. Install the correct orifice and replace the pilot hood. The pilot hood has an indexing notch which must be align with the pilot base. Ensure the pilot hood is properly located and that the spring holding the pilot hood is properly engaged. Delayed ignition may be the result of an improperly installed pilot hood.



Figure 52: Removing the hood.

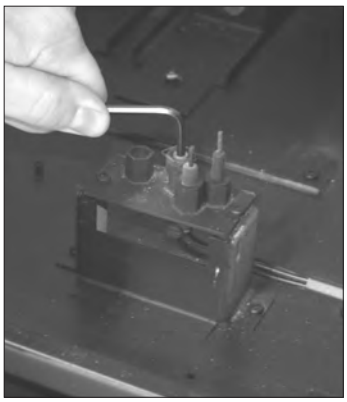

Figure 53: Removing the Pilot Orifice.

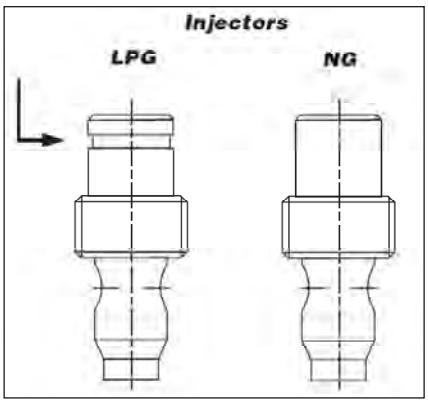

Figure 54: Identifing the Orifice.

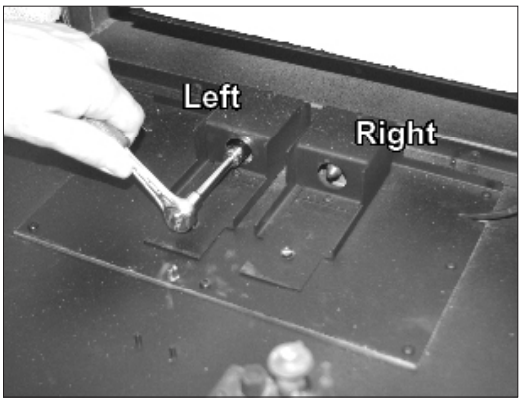

Figure 55: Removing the Gas Orifices.

9. Using a ⅜" socket wrench, remove both gas orifices from the orifice mounting brackets at the rear floor of the firebox (Figure 55).
10. Use only the gas orifices that were included in the LP gas conversion kit supplied by the manufacturer. The correct orifice sizes for the DV48 are shown in Table 6.



Figure 56: Removing the Right Burner Support.

Table 6: Correct Orifice Sizes for the DV48

Burner	Left (front)	Right (rear)
Glass Tray NG	43	41
Glass Tray LP	55	55
Log Burner NG	43	41
Log Burner LP	55	53

11. Using a T-20 driver, remove the Right Burner Support (Figure 56).
12. Remove the Valve Access Cover by removing all ten (10) T-20 screws (Figure 57).
13. Using a T-20 safety driver, remove the two (2) screws that hold the servo regulator from the gas valve (Figure 58).

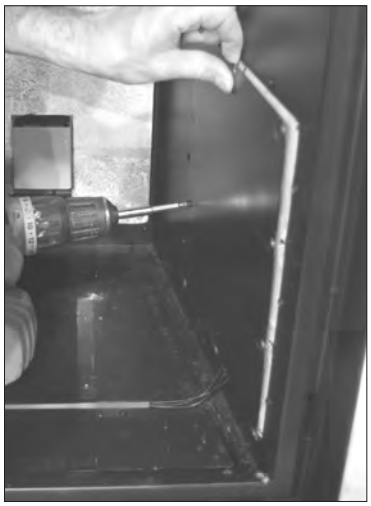

Figure 57: Removing Access Cover.

14. Remove the rubber regulator diaphragm that is situated between the servo regulator and the valve body and replace with the one provide in the LP conversion kit.
15. Install the LP servo regulator, with the new longer T-20 screws, included in the LP conversion kit.
16. If the fuel delivery pressure or the manifold pressure is to be verified, it can be done at this stage.
    a. Loosen the pressure tap screw.
    b. Place a ¼" silicone tube over either pressure port on the valve (refer to Figure 59). Attach the tube to a monometer.
    c. Install a burner in the firebox (see burner installation section)
    d. Being careful to route the silicone tube away from the burner, test fire the unit for only long enough to establish the pressure reading.
    e. Check your inlet gas pressure by measuring the pressure at the inlet pressure tap on the valve. Inlet pressure should be a minimum of 12" WC. If the pressure reads less than this, have a licensed gas fitter determine and rectify the reason for the reduced supply pressure.

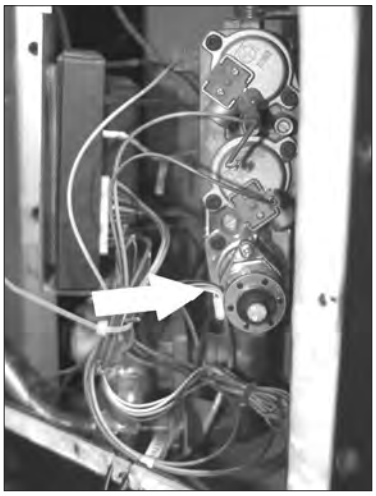

Figure 58: Servo Screws.

f. Check your manifold pressure by measuring the pressure at the manifold pressure tap on the valve. The manifold pressure with the appliance operating at its high setting should be between 9.5" WC and 10.5" WC. If your pressure reads outside of this range, make sure that your LP conversion regulator has been properly installed. If it has, call your dealer to arrange for a replacement valve to be installed. Turn off the fuel supply to do not operate this unit until the valve has been replaced.

g. <u>Make sure to close the test pressure point taps after testing.</u>

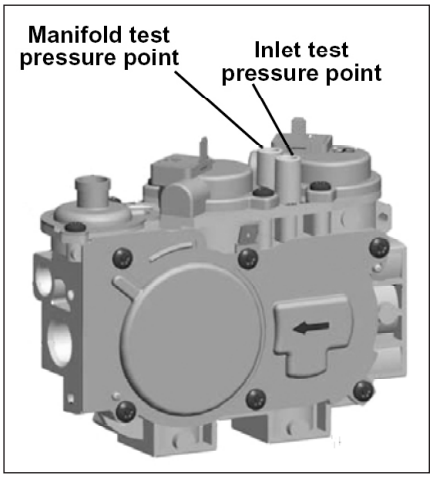

Figure 59: Pressure Test Points.

17. Re-install the Valve Access Cover, making sure that the wire harness is carefully tucked back into the valve compartment and that the pilot tube, igniter lead and flame proving wire are routed through the provisions in the Valve Access Cover and the Firebox opening.
18. Re-install the Right Burner Support.
19. Re-connect the fuel supply to the unit.
20. Re-install the Fireplace Panel Set, Burner, Burner Trim Kit, Grate, Logs or Glass Burner and Front Door.
21. Once the unit is re-assembled and started, use a gas leakage detector to check for any fuel leakage. Check around the entire valve assembly, particularly around the gas regulator and stepper motor. Make sure that the LP regulator has been properly installed and is not leaking any fuel.
22. Once the supply pressure and the manifold pressure have been confirmed, you can check the units rating by confirming the correct orifice sizes are installed. This can be done by using a quality orifice gauge and referring to the chart above for the correct office sizing. The rating is listed on the rating plate located under the firebox, attached to the unit with a cable.

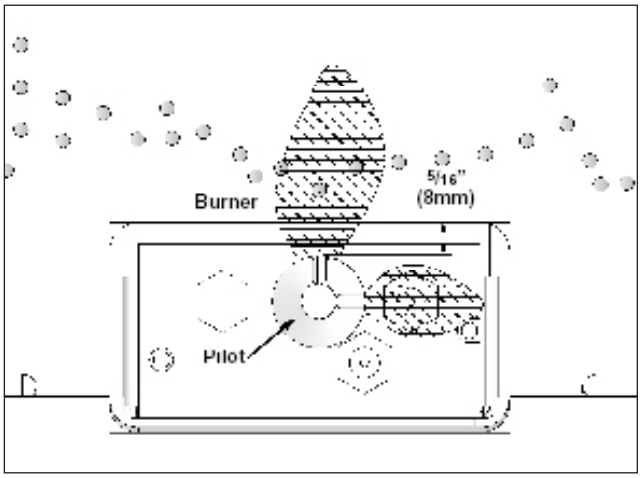

Figure 60: Relationship between ignitor and burner.

23. Fire the unit to ensure correct operation and flame picture. Ensure the Split Valve and Flame Modulation works as described in the operations section of this manual.
24. Check the pilot flame that it is the correct size and orientation. The pilot flame can be adjusted with the adjustment provision on the front face of the valve. This is located just up and to the left of the regulator motor. It is clearly marked on the valve. Adjusting the screw in or out will raise or lower the pilot flame height. The correct pilot flame should resemble Figure 60.

    The ignition sequence should be as follows:
    a) Press the ON button on the remote control.
    b) The receiver should beep, to indicate the command has been received.
    c) Within a 2-3 second of the beep, the ignitor should begin to spark. The ignitor will spark at intervals of 1 second(s).
    d) The main valve will open 4-6 seconds after the pilot is lit.
    e) Within 4 seconds of the main valve opening, all of the burner ports should light and remain burning.
25. To complete the LP conversion of this appliance, place the "LP Converted" sticker, supplied with the LP conversion kit on the rating plate indicating that this unit has been converted to operate on LP gas.

FIREBOX LINER INSTALLATION:

IMPORTANT: The paint on the panels may fade for the first 8-10 hours of burn time, but will come back to its color after the paint has curred. The paint is very delicate and handing them with care is nessesary not to mark or smuge the paint.

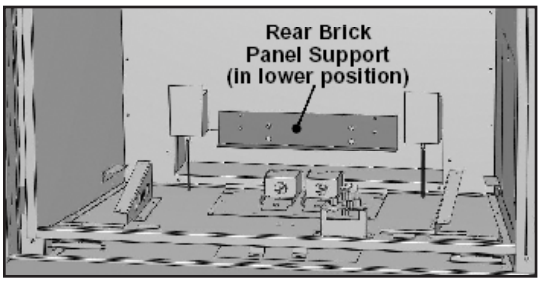

Figure 61: Rear Brick Panel Support.

1. Prior to installing the firebox liners, you will need to ensure the Rear Brick Panel Support is in the correct position. The support is located at the back of the firebox (see Figure 61) and can be installed in two (2) positions. The upper position (using the lower screw holes) is for the October Panels. The lower position (using the upper screw holes) is for the Sandstone, Ledgestone, and Porcelain Panels. Remove the Support, if necessary, and move it to the appropriate placement.



Figure 62: Rear Firebox Liner Panel in Place.

3. Ensure the light covers provided with your kit are installed on the Light Cover Bases at the rear of the firebox. The tabs on the back of the Light Cover slide down behind the light cover base. Refer to Figures 96 and 97.

2. Install the Rear Firebox Liner. This panel fits around the accent lights and rests on top of the Rear Brick Panel Support. It will stay in this location as you install the remaining panels. Refer to Figure 62.

3. Install the Left Firebox Liner Panel; it sits on the bottom front edge of the firebox (see Figure 63 & 64), a support bracket at the lower rear of the firebox, and is held in by a retainer at the top of the firebox. Adjust the panel retainers as required.

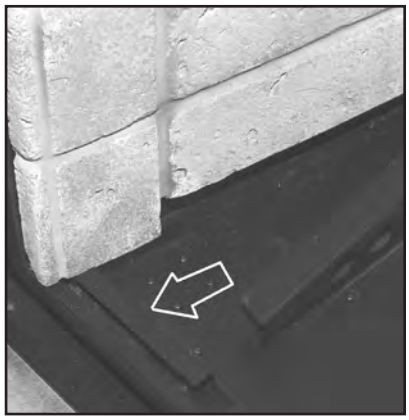

Figure 63: Left Firebox Liner Panel on Front Edge of Firebox.

4. Install the Top Panel by placing it on top of the Rear Panel and behind the Left Panel (see Figure 65). Hold it with one hand or have someone else hold it for you while you place the last panel. WARNING: If this panel falls from this location it will possibly break or the paint work will become chipped.



Figure 64: Left Firebox Liner Panel in Place.

5. Place the Right Firebox Liner Panel in the same manner used for the Left Panel (see Figure 66). The vertical edges of the left and right panels should line up with the front edges of the firebox sides. The side panels rest up against the back panel and hold the top panel in position.



Figure 65: Top Firebox Liner Panel in Place.



Figure 66: Right Firebox Liner Panel in Place.

LOG BURNER / EMBER BED INSTALLATION:

1. Use the two (2) T-20 screws provided; install the rear burner shield onto the back of the burner. The mounting holes are just above the mixing tubes at the rear of the burner, refer to Figure 67.

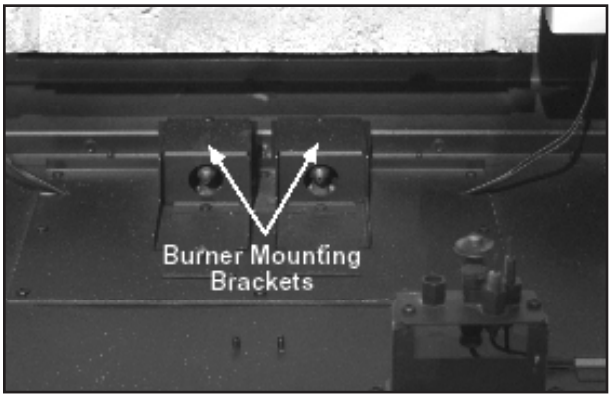

Figure 68: Burner Mounting Brackets.

2. In the bottom rear of the firebox there are two (2) gas orifices in a housing that facilitate the air shutter mechanisms and the Burner Mounting Brackets are above them (See Figure 68). There are two (2) mixing tubes underneath the back of the burner (see Figure 67). Lift the burner into the firebox with the back of the burner tilted downward. Keep the burner high enough at the front to clear the pilot assembly. Line up the mixing tubes with the holes in the burner mounting brackets and slowly lower the front of the burner over the pilot assembly (see Figure 69).



Figure 71: Burner Accents Pieces in Place.

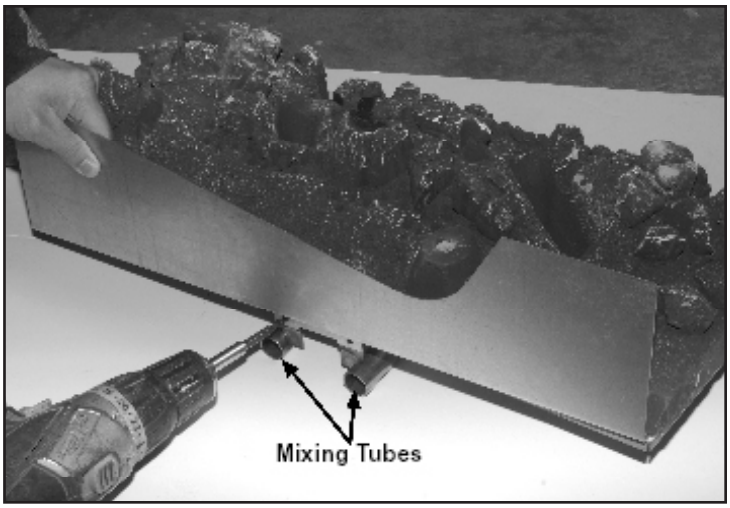

Figure 67: Installing Rear Burner Shield.



Figure 69: Log Burner Over Pilot Assembly.

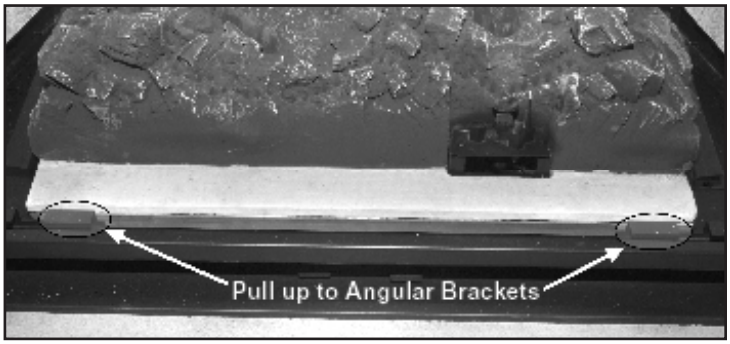

Figure 70: Log Burner in Place.

3. Pull the burner forward up to the angular brackets near the front of the firebox (see Figure 70).

   IMPORTANT: If the burner is not far enough back to lower the burner behind these brackets, then the mixing tubes are not engaged in the air shutter. Failing to ensure the mixing tubes are located in the mixing tube support brackets may cause serious performance and or safety issues.

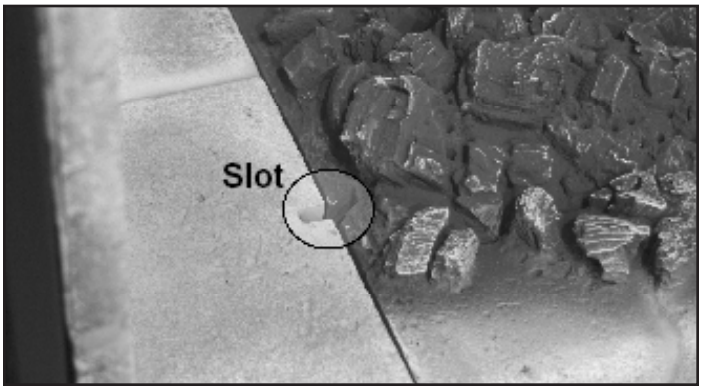

Figure 72: Slot for Firebox Grate.

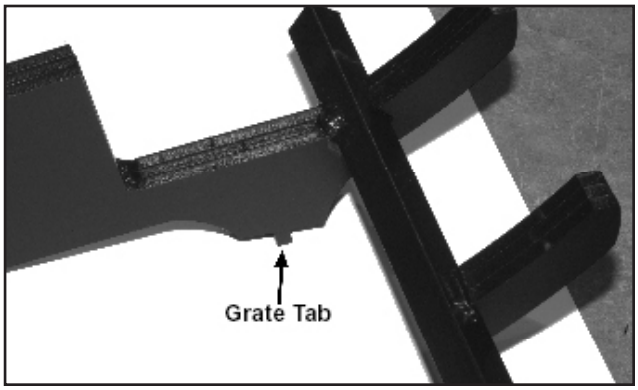

Figure 73: Tab on Firebox Grate.

4. Install the burner accent pieces as shown in Figure 71. There are a left, a right and a front ceramic trim. On each side of the burner and on the inside of each burner side accent pieces there is a slot, which should be aligned in order to position the log grate correctly (see Figure 70).
5. The firebox grate has two (2) tabs that run below the feet of the grate (see Figure 73), place the grate over the burner top and carefully inserting the grate tabs into the slots on the burner (see Figure 72 & 74). Once the grate is installed correctly, the burner, grate, and side burner accents will be all locked together.



Figure 74: Firebox Grate in Place.

LOG SET INSTALLATION:

IMPORTANT: The paint on the logs may fade for the first 8-10 hours of burn time, but will come back to its color after the paint has curred. The paint is very delicate and handing them with care is nessesary not to mark or smuge the paint.

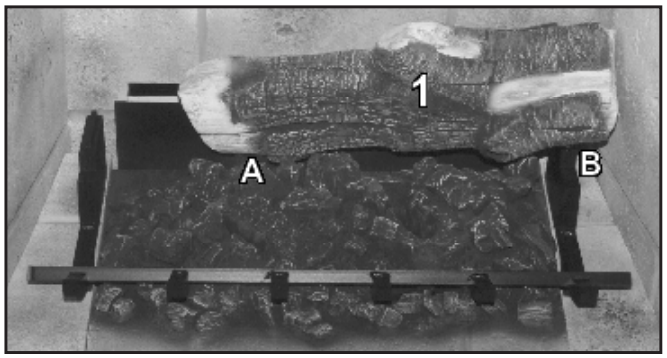

Figure 75: Log 1 in Place.

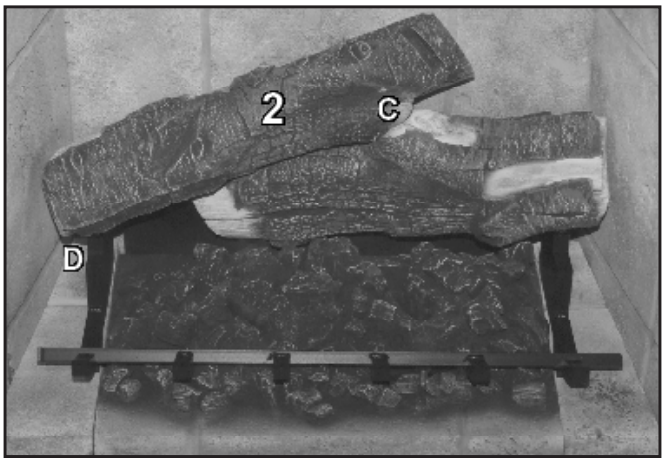

Figure 76: Log 2 in Place.

1. Install Right Rear Log. The right side sits on the grate with the groove on the bottom of the log fitting onto the top of the grate (see Figure 75). Insert the log pin into the top of the ember burner (see A in Figure 75). Align the log front edge with the front section of the grate (see B in Figure 75).

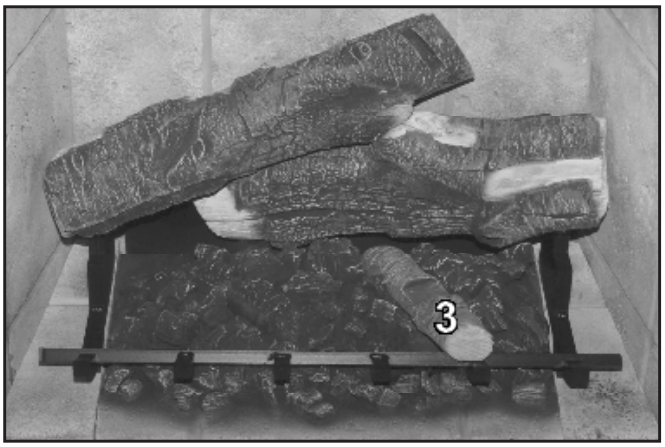

Figure 77: Log 3 in Place.

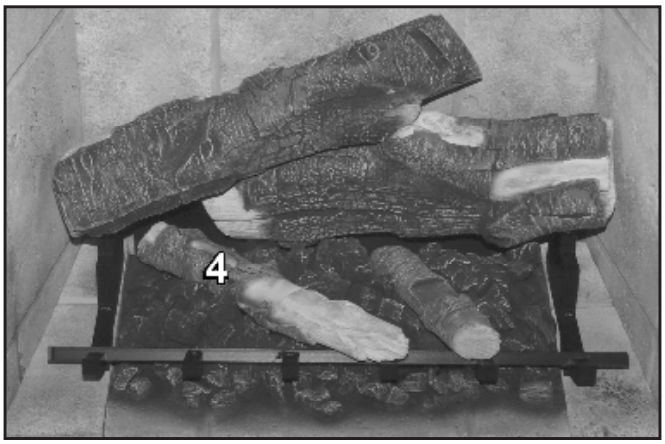

Figure 78: Log 4 in Place.

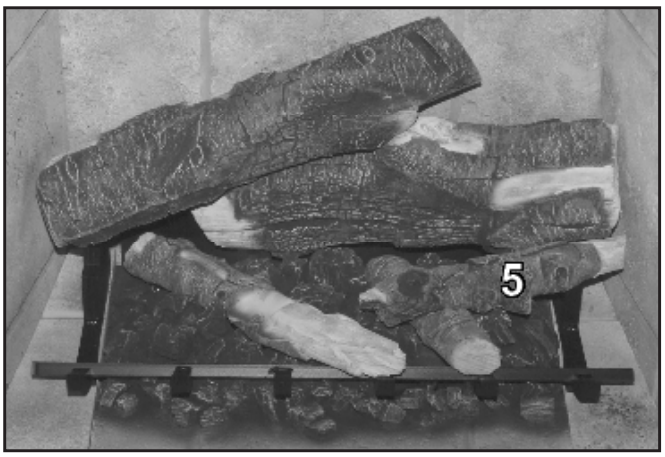

Figure 79: Log 5 in Place.

2. Install Left Rear log with the right side on the grate, using a groove on the bottom of the log to index itself to the grate (see Figure 76). The right side self locates on the first log. Alignment notches are provided for locating the centre area (see C in Figure 76). Align the front edge of the log with the upright section of the log grate (see D in Figure 76).
3. Insert Log 3 into the groove on the burner top. The groove has a stop at the rear to position the log properly from front to back. Refer to Figure 77.
4. Log 4 sits in a groove molded into the top of the burner top. See the details in Figure 78 showing the indexing key on this log.
5. Install Log 5 with the right side resting on the grate and the right side right up against the right hand firebox liner. The left side sits on a flat section in Log 3. Refer to Figure 79.

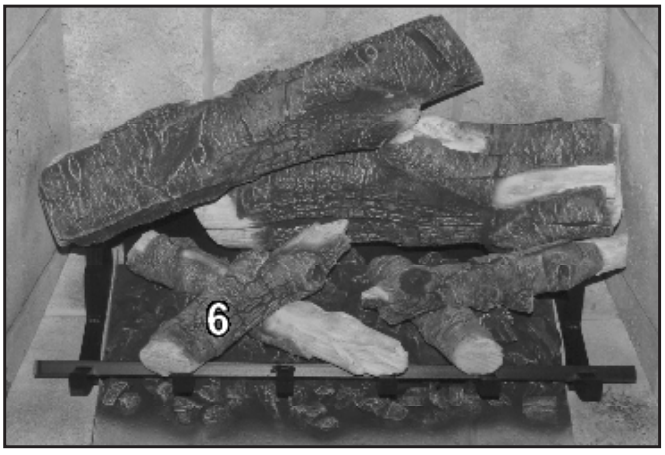

Figure 80: Log 6 in Place.

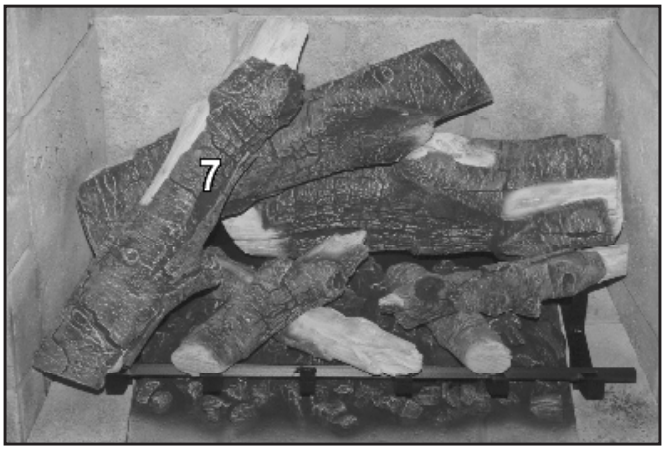

Figure 81: Log 7 in Place.

6. Install Log 6 by resting it across the flat section of Log 5 and locating the front edge across the grate finger as shown in Figure 80.
7. Log 7 sits in between the left panel and the left grate finger and cross the bar of the grate (see Figure 81). There is a notch across Log 2, which this log will locate into. The edge along the back of this log will index into the notch of Log 2.

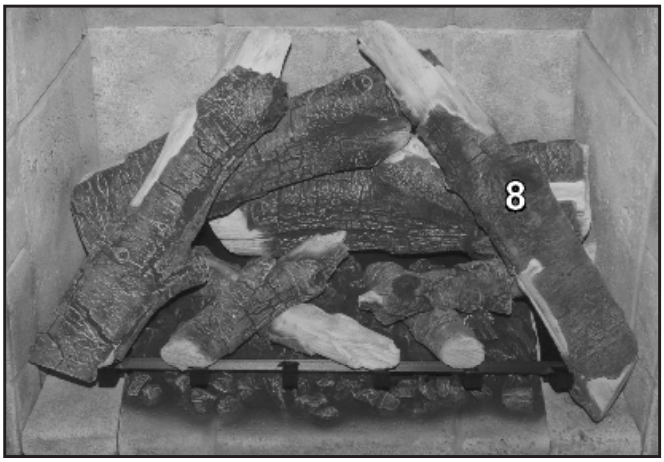

Figure 82: Log 8 in Place.

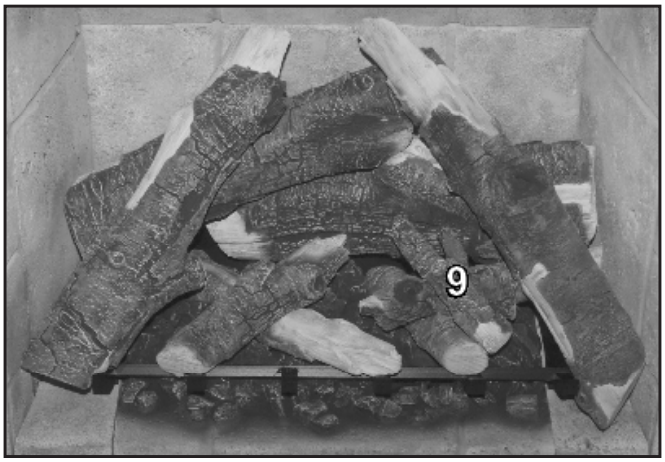

Figure 83: Log 9 in Place.

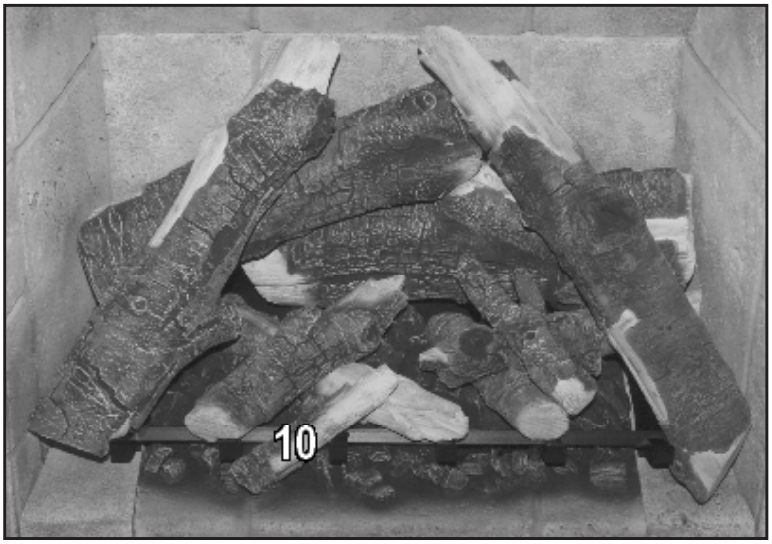

Figure 84: Accent Twig in Place.

8. Situate Log 8 between the right grate finger, the right firebox liner and the grate cross bar (see Figure 82). On the back of the log near the top end is a ceramic pin, this pin sits into a groove on the top of Log 2.
9. Sit the Y shaped Log 9 across Log 4 and 5 as shown in Figure 83.
10. The final little Accent Twig sits on the front ceramic burner accent and the grate finger as shown in Figure 84.

NOTE: Variances in gas quality or log placement may cause some discoloration of the log set to occur.

GLASS BURNER INSTALLATION:

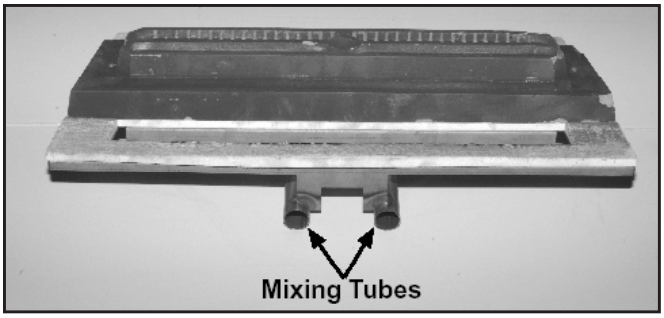

Figure 85: Mixing Tubes in Glass Burner.



Figure 86: Placing Glass Burner.

1. In the bottom rear of the firebox there are two (2) gas orifices in a housing that facilitate the air shutter mechanisms and the Burner Mounting Brackets are above them (See Figure 68). There are two (2) mixing tubes underneath the back of the burner (see Figure 85). Lift the burner into the firebox with the back of the burner tilted downward. Keep the burner high enough at the front to clear the pilot assembly. Line up the mixing tubes with the holes in the burner mounting brackets and slowly lower the front of the burner over the pilot assembly (see Figure 86).

2. Pull the burner forward up to the angular brackets near the front of the firebox (see Figure 87). The burner rests on the floor of the firebox and is properly aligned against the two (2) front burner rests.

   IMPORTANT: If the burner is not far enough back to lower the burner behind these brackets, then the mixing tubes are not engaged in the air shutter. Failing to ensure the mixing tubes are located in the mixing tube support brackets may cause serious performance and or safety issues.

3. Place the glass tray over top of the burner top as shown in Figure 88. It simply rests over the top section of the burner.

4. In front of the pilot assembly, on the front edge of the burner is one burner port which helps in the lighting of the main burner (see Figure 87). The glass tray has one hole in the same position that allows the gas to flow to this location. Ensure the glass tray hole is properly positioned over the port in the burner.

5. The DV48 glass burner option is supplied with two (2) quantities of glass, black and white. There is enough of either to fill the burner, so you can decide whether to install all white, all black, or some type of mixture (example in Figure 89). Fill the glass burner tray to the top. Try to keep glass from falling in around the pilot assembly.

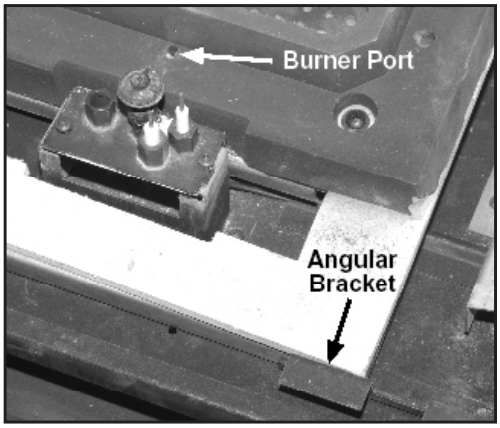

Figure 87: Glass Burner in Place.

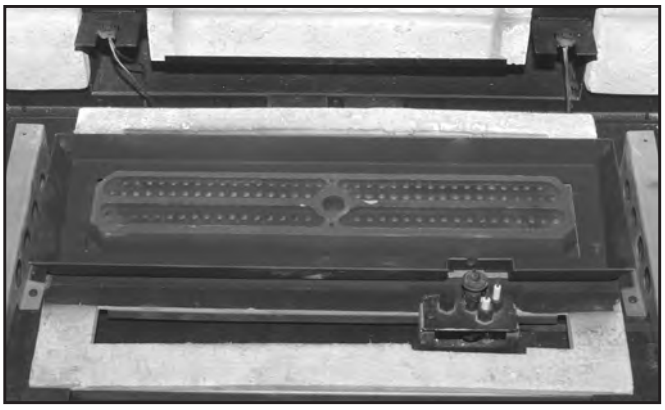

Figure 88: Glass Tray over Burner.

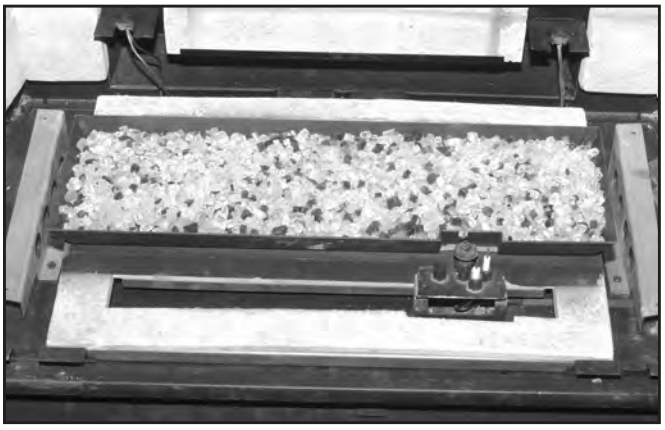

Figure 89: Glass Tray with Mixed Glass.



Figure 90: Burner Trim Being Placed.



Figure 91: Burner Trim in Correct Position.

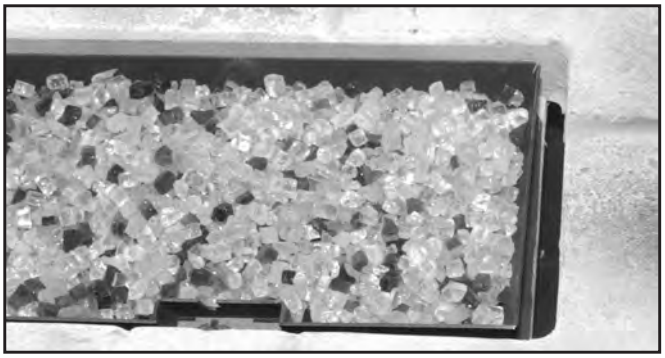

Figure 92: Proper Gap Between The Glass Tray And The Burner Trim.

6. Gently place the burner trim piece around the burner (see Figure 90). It sits on various support brackets and fits around the burner tray and up against the firebox liner. Figure 91 shows the burner trim in the correct position. Ensure a minimum ⅜" (8mm) gap is maintained around the burner glass tray (see Figure 95).
7. If the optional rock accent kit was purchased for the DV48, you can place the rocks in a random pattern around the glass tray. A few can straddle the ⅜" (8mm) gap around the glass tray. Try to keep them looking randomly placed. Keep from placing them in large piles as they need to be evenly distributed. Examples are shown in Figure 93 & 94.

   It is important that rock accents are not placed in front or over the pilot assembly. This may prevent the burner from lighting in a timely fashion or overheat the pilot assembly. Keep an area of about 3" (75mm) in front of the pilot light free from obstruction and rock accents (see Figure 93).

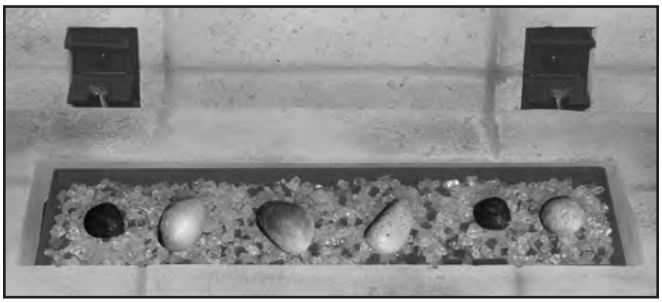

Figure 93: Example of Rock Placement - Single Kit.



Figure 94: Example of Rock Placement - Multiple Kits.

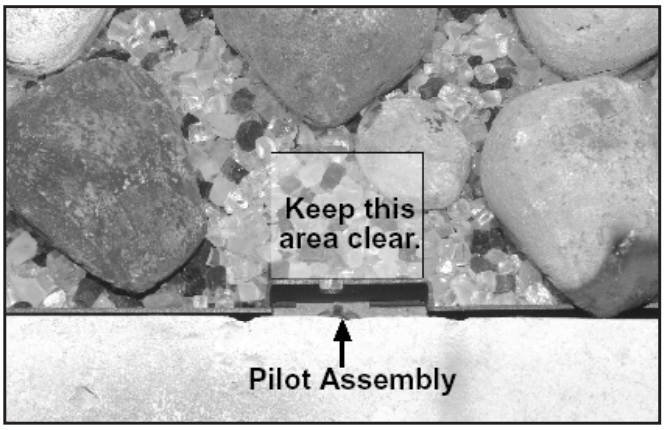

Figure 95: Keep Area in Front of Pilot Assembly Clear.

PORCELAIN PANEL KIT INSTALLATION:

1. Install the porcelain Light Covers over the Light Cover Base. The tabs on the back of the Light Cover slide down behind the Light Cover Base. Refer to Figures 96 & 97.
2. Ensure the Rear Brick Panel Support is in the lower position. The support is located at the back of the firebox (see Figure 61). Remove the Support, if necessary, and move it to the appropriate placement.
3. Install the Rear Firebox Liner. This panel rests on top of the accent lights and Rear Brick Panel Support. It will stay in this location as you install the remaining panels. Refer to Figure 98.

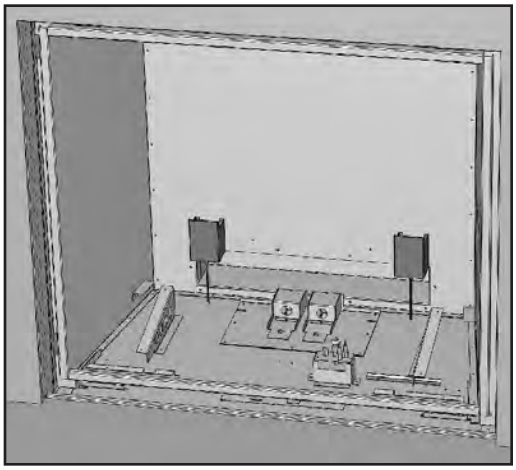

Figure 96: Porcelain Light Covers in Place.

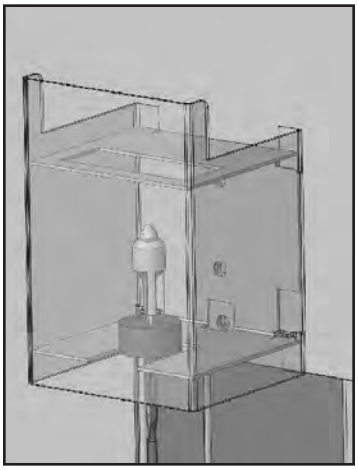

Figure 97: Porcelain Light Covers Close-up.

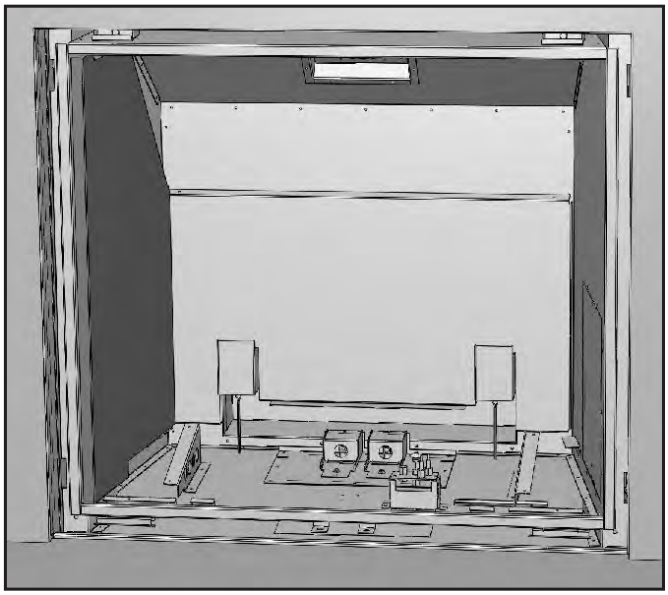

Figure 98: Rear & Left Porcelain Panels in Place.

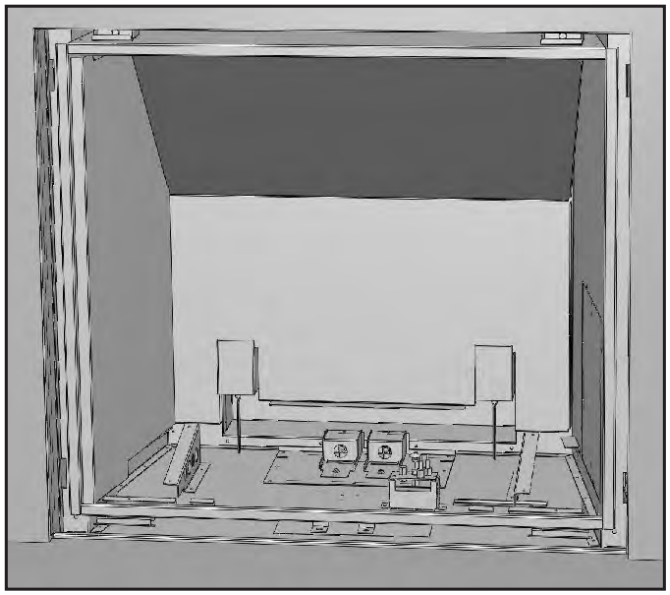

Figure 99: Top Porcelain Panel in Place.

4. Install the Left Firebox Liner Panel; it sits on the bottom front edge of the firebox (see Figure 98), a support bracket at the lower rear of the firebox, and is held in by a retainer at the top of the firebox. Adjust the panel retainers as required.
5. Install the Top Panel by placing it on top of the Rear Panel and behind the Left Panel (see Figure 99). Hold it with one hand or have someone else hold it for you while you place the last panel. WARNING: If this panel falls from this location it will possibly break or the paint work will become chipped.

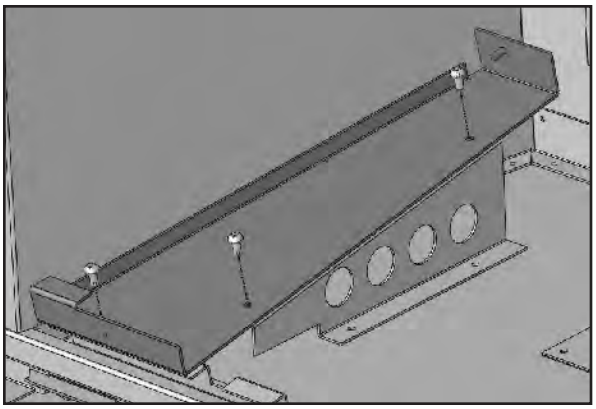

Figure 100: Installing Left Burner Cover Support.

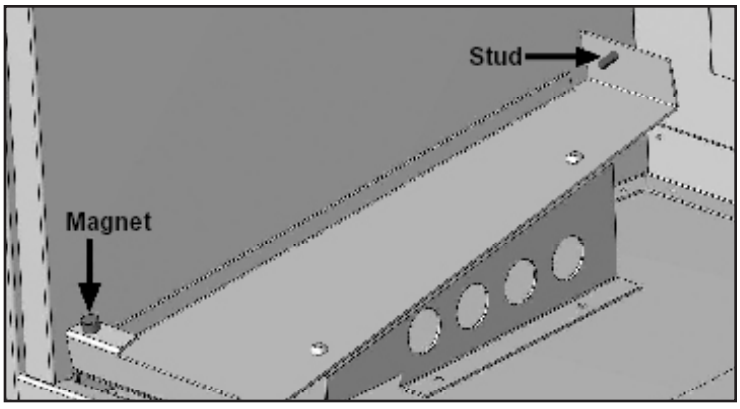

Figure 101: Permanent Magnet on Left Burner Cover

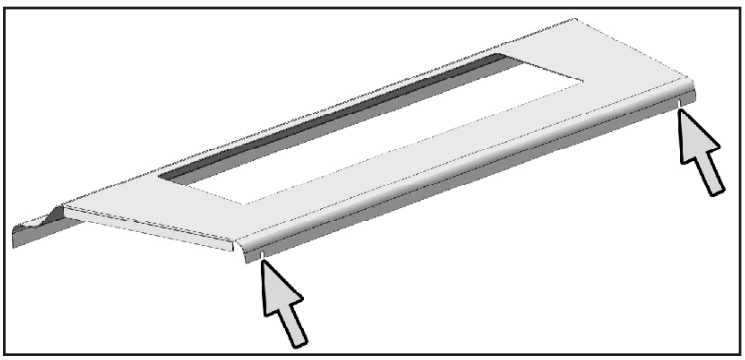

Figure 102: Slots in Back of Burner Cover.

6. Place the Right Firebox Liner Panel in the same manner used for the Left Panel. The vertical edges of the left and right panels should line up with the front edges of the firebox sides. The side panels rest up against the back panel and hold the top panel in position.
7. Install the Left Burner Cover Support as shown in Figure 100. This bracket is installed using three (3) T-20 Torx screws supplied. Install the Right Burner Cover Support Right as you've done on the left side.

8. Place one of the Permanent Magnets provided on the front edge of the Burner Cover Supports as shown in Figure 101.
9. Install the Burner Assembly; refer to Step 1 & 2 of GLASS BURNER INSTALLATION.
10. Place the Ceramic Burner Front on top of the Burner Cover Supports as shown in Figure 101. This part should be pulled forward until it contacts the metal brackets in the front.

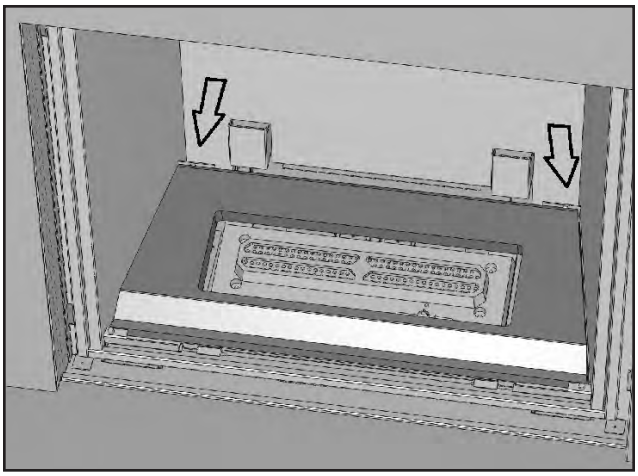

Figure 103 Installing Burner Cover.

11. The Burner Cover has two (2) slots, one the either side of the rear flange (refer to Figure 102). These slots fit over the two (2) studs in the firebox (refer to Figure 101) to keep it in place.

    The arrows in Figure 103 point at the studs that hold the Burner Cover in position. Place the Burner Cover over the pins and then once aligned with the holes, push the Burner Cover back towards the rear of the firebox. The front of the Burner Cover is held in place by the permanent magnets installed in step 8.
12. Install the Glass Tray and the Glass to complete the installation of the Porcelain Panel Kit, refer to Step 3, 4, 5, & 7 of GLASS BURNER INSTALLATION.

OPTIONAL FRONT INSTALLATION:

There are many different styles of optional fronts available for your fireplace. These fireplace fronts hang onto the front of your fireplace using four (4) hooks, one on each corner (refer to Figure 104). These hooks secure the front to the fireplace, providing for easy removal for service access to the fireplace and also to position the front the proper distance away from the glass door and the fireplace facing.

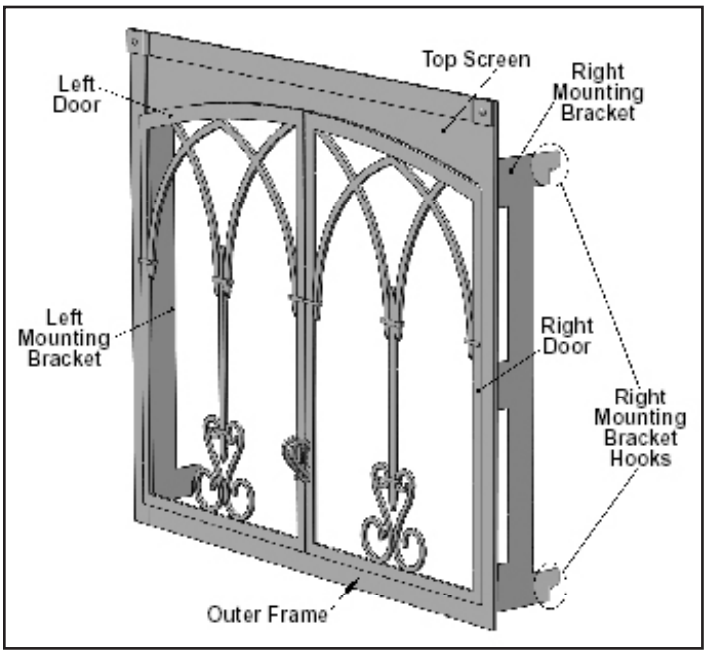

Figure 104: Optional Front Parts.

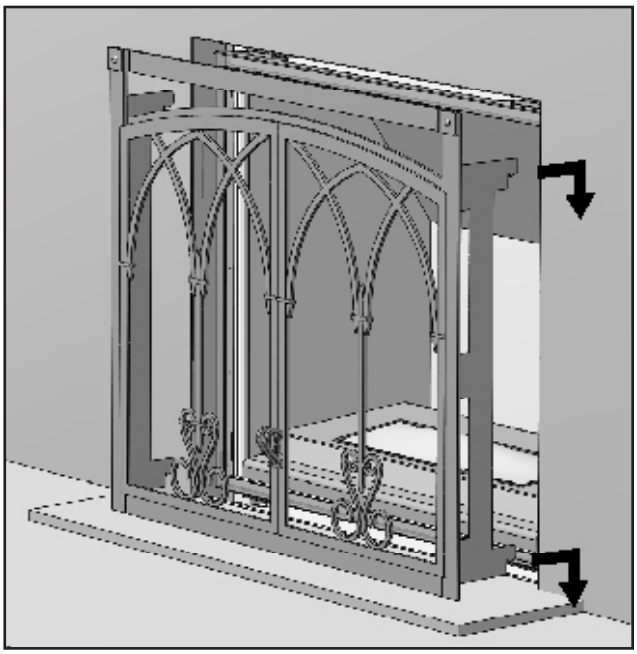

Figure 105: Optional Front Being Installed.

Install the front by lifting it parallel to the fireplace with the mounting bracket hooks pointing towards the fireplace. Slide the hooks all the way into the slots between the Glass Door Frame and the drywall flanges of the fireplace. Pull down on each corner to make sure the hook is engaged with the hanger. Refer to Figures 105 & 106.

IMPORTANT: Ensure that the minimum gap required between the Optional Front and wall of the unit is maintained (refer to Figure 106). Not maintaining the proper gap will cause the unit to run at elevated temperatures and result in an unsafe condition

The face should be cleaned before the fireplace is turned on for the first time.

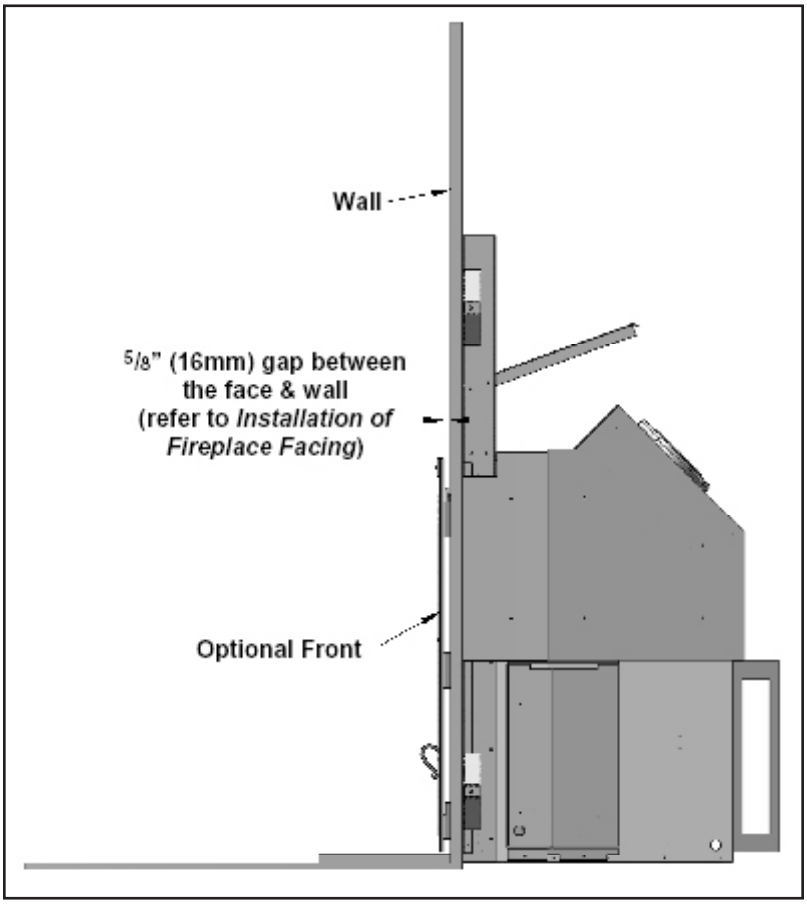

Figure 106: Optional Front Installed.

Wiring Harness

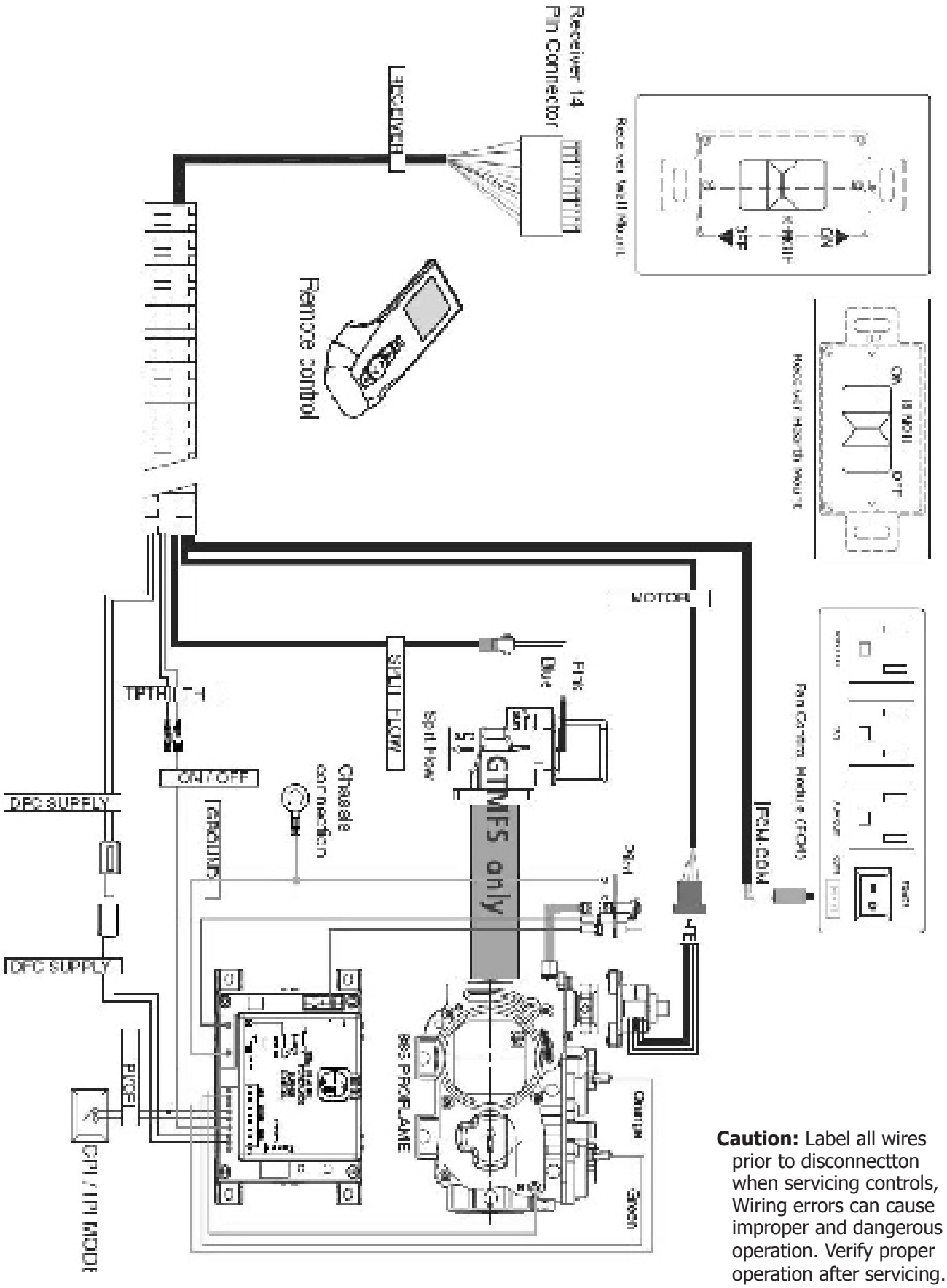

Caution: Label all wires prior to disconnectton when servicing controls, Wiring errors can cause improper and dangerous operation. Verify proper operation after servicing.

1. Fail to ignite: If there is no positive ignition, the board will go into lock out and the LED will blink 3 times in intervals until the system is reset.
2. Low battery condition (<4V): the LED indicator will blink one (1) time in intervals.
3. Parasitic Pilot Flame: the LED indicator will blink two (2) times in intervals.
4. System Lock out: the LED indicator will blink three (3) times in intervals.

Additional Ignition Information

1. The Proflame DFC Board will try two (2) times for ignition.
2. Each try for ignition will last approximately 60 seconds.
3. The wait time between the two tries is approximately 35 seconds.

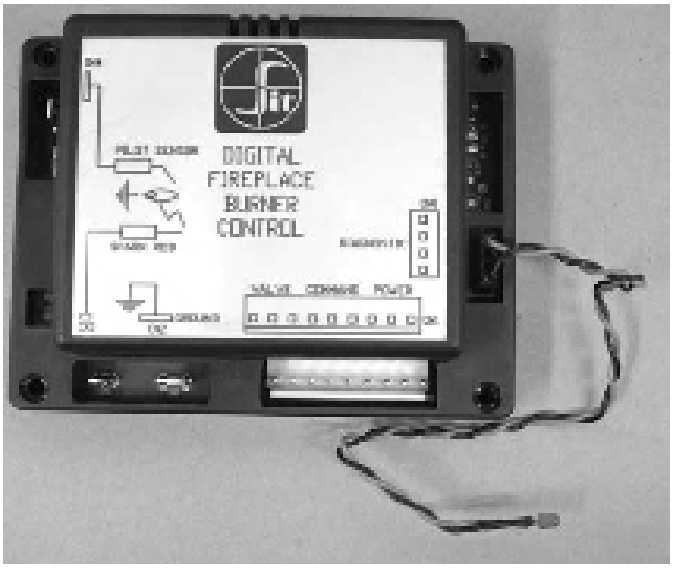

Figure 107: Proflame DFC Board with LED Indicator attached.

TROUBLESHOOTING

Problem	Possible Cause	Solution
Thermostat does not work	The pilot flame has gone out	· Turn it ON
	The On/Off switch is turn to OFF	
	The thermostat is set too high	· Set the thermostat to a lower temperature
No spark generation	Spark developes near the pilot assembly or could occur onboard	· Check pilot assembly wiring
		· Check for broken or poor connection from the sparker to the electrode
		· Check for the spark shorting or arcing at other locations
		· Check for defective sparker and spark electrode
No pilot flame ignition	No spark from the igniter	· See "no spark generation"
	Air in the gas line	· It takes a while for all the air to purge out of the pilot before gas can reach the pilot and ignite
	Pilot gas pressure dropout upon main burner gas valve opening	· Check gas mains supply and pressure
	No gas flow out of the pilot burner	· Check gas valve wirings and connections to the board
		· Check the pilot burner for obstruction
		· Check the wirings and connections between the pilot assembly and the board
		· Check the correct gas type settings on the valve and pilot burner assembly orifice
Pilot will not remain lit	Problem with Flame Sensor circuit	· Check for proper connection of the Flame Sensor to the DFC board
		· Check pilot for full flame impingement around Flame Sensor
		· If flame is too small, check gas pressure, adjust pilot rate screw, check pilot head for damage
		· Ensure the ground wire is properly attached to the pilot mounting bracket and that it is makes a good electrical connection.
	Restrictor setting	· Use the correct restrictor setting for the venting configuration
Remote control does not work	The pilot light has gone out	· See "Pilot will not remain lit"
	The remote is too far away from the heater	· Use the remote closer to the heater
	The remote control receiver is turned "OFF"	· Check the remote control instructions
	One of the two remote control or receiver batteries are dead	· Replace the batteries
No reaction to command	Receiver or transmitter batteries are low	· Replace the batteries
	A maximum number of failed ignitions or flame restorations have been reached.	· Remove any possible blocking conditions. See "locking conditions"
		· See how to reset the board from Lockout
	No communication between the remote control and the receiver	· Reprogram the transmitter to the receiver.
		· Follow the initializing system for the first time

TROUBLESHOOTING

Problem	Possible Cause	Solution
Locking conditions	Reset the Proflame DFC board	· Turn the system off by pressing the ON/OFF button on the transmitter
		· After approximately 2 seconds press the ON/OFF button on the transmitter again.
		· In the manual flame control mode, use the down arrow button to reduce the flame to off, indicated by the word OFF displayed on the transmitter LCD screen.
		· Wait approximately 2 seconds and press the up arrow button, the ignition sequence will start.
		· With the transmitter off, move the slider switch on the receiver to the OFF position.
		· Wait approximately 2 seconds and move the receiver slider switch to the ON position.
Main burners will not start	The pilot flame has gone out	· See "Pilot will not remain lit"
	The remote control is not working correctly	· Replace the batteries
	The thermostat is disconnected or set too high	· Set the thermostat to a lower temperature
	Problem with thermopile circuit	· Check gas line pressure
		· Check wiring to thermostat for breaks
		· Check for flame impingement on thermopile
Flame lifting	Leak in vent pipe	· Check for leaks in vent connections
	Improper vent configuration	· Check vent configuration with manual
	Terminal may be re-circulating flue gases	· Check to see if terminal is on correctly
		· May need to install high wind termination cap.
		· Contact dealer
Blue Flames	The heater has just been started	· Normal during start up: flame will yellow as the fireplace heats up
	Improper air shutter adjustment	· Adjust air shutter – contact your dealer
Glass fogs up	Normal condition: after the appliance warms up the glass will be clear.	**Due to additives in gas, glass may get hazy during operation** Clean as needed.
Flames are burning "dirty" or sooting	The logs or glasses are placed incorrectly	· Check log positioning
		· Check level of glasses layout
	Improper air shutter adjustment	· Increase primary air by opening the air shutter and/or by opening the vent restrictor
		· Check for proper venting and blockage of the vent termination
		· See also "Burners will not remain lit"
	Incorrect rating input	· Check manifold pressure and clock input rating for over-firing

APPEDIX A - OPTIONAL REDUCED CEILING HEIGHT INSTALLATION

The DV48 can be installed with the reduced ceiling hieght as shown in this diagram. If you are limited by ceiling heights, particularly when installing a raised hearth, you can install the unit observing the clearances outline in this diagram. The main difference is the install depth is changed to 26½" (673mm) to compensate for the reduced vertical cleances. The width and framing dimensions remain unchanged to the regular installations shown earlier in this manual.

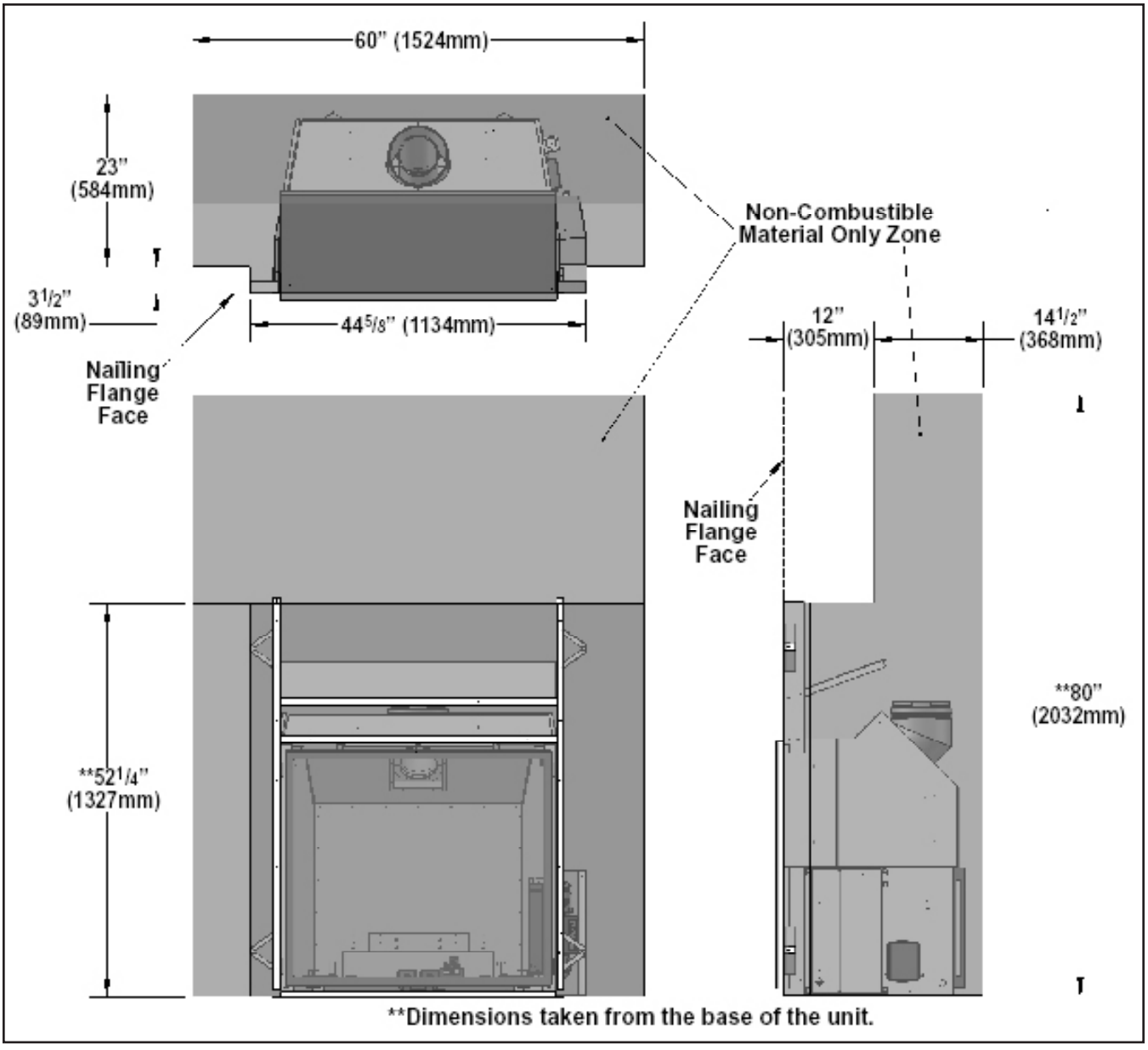

Parts Diagram

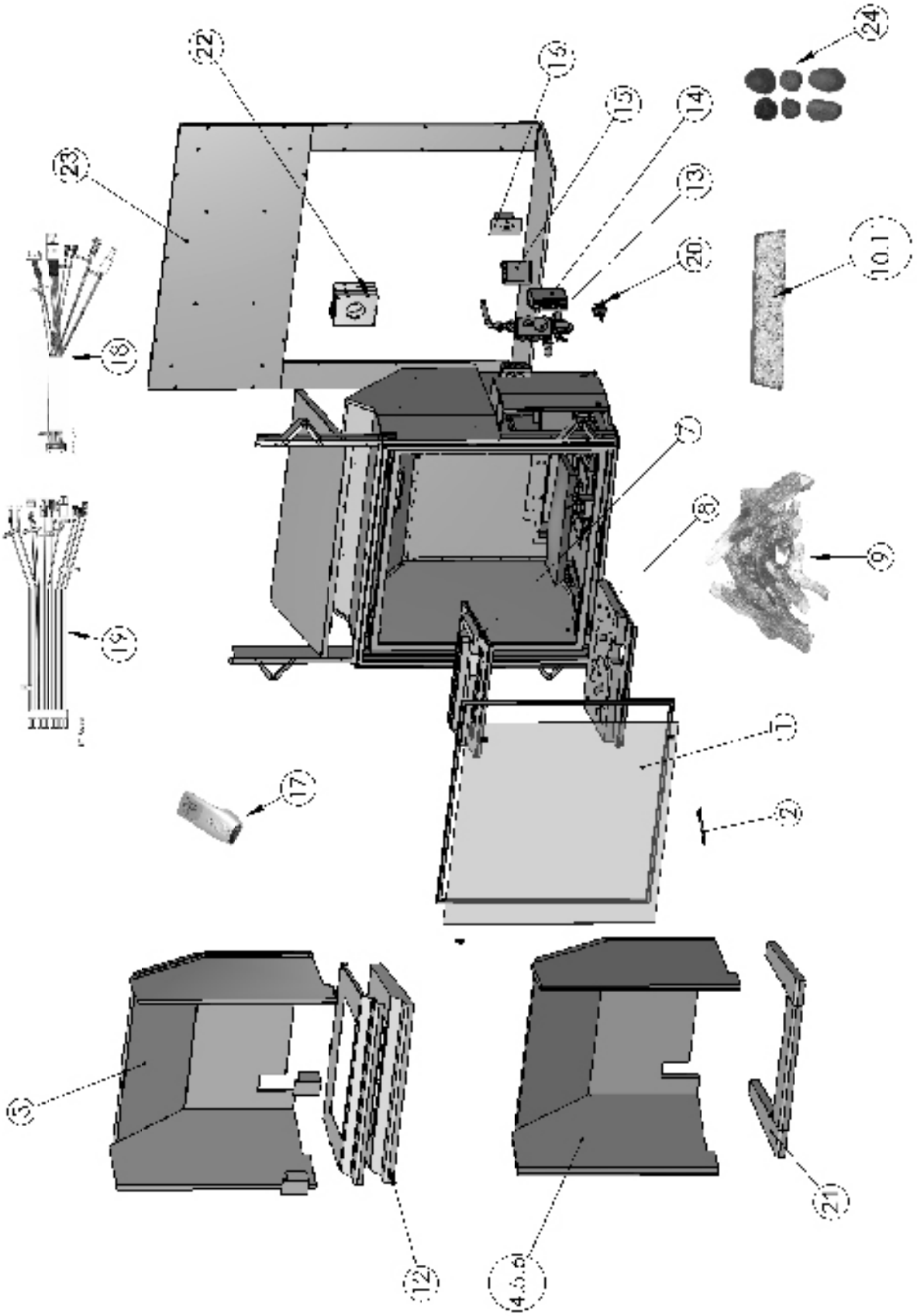

Parts Diagram - Options



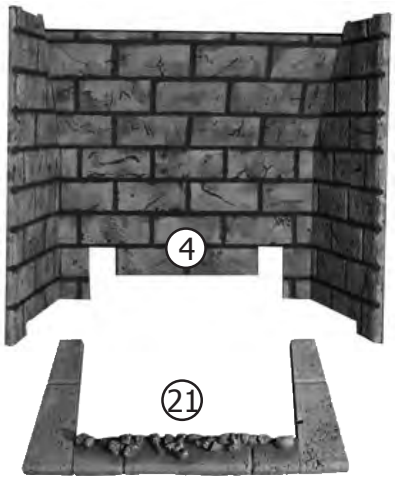

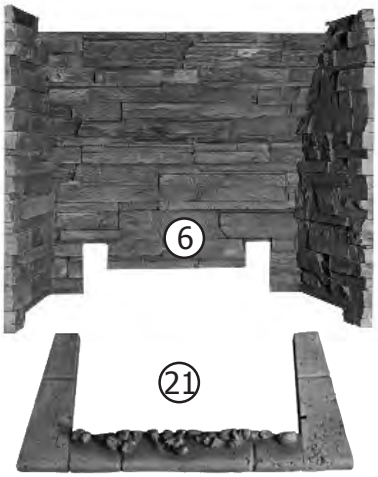

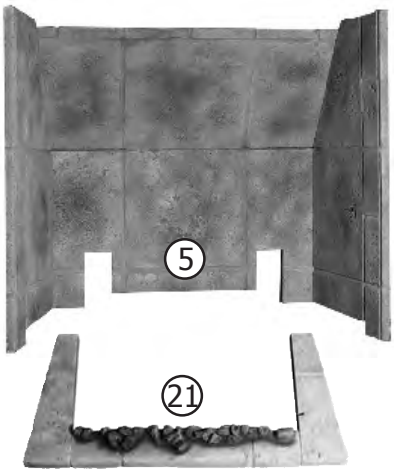













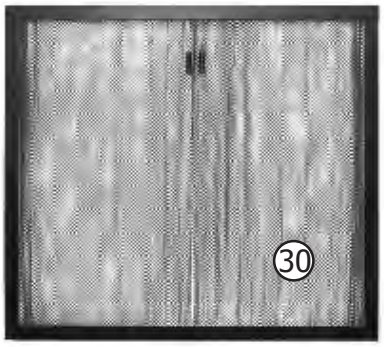

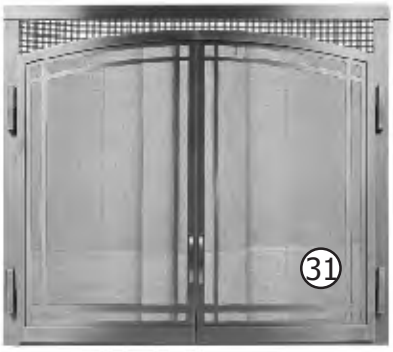



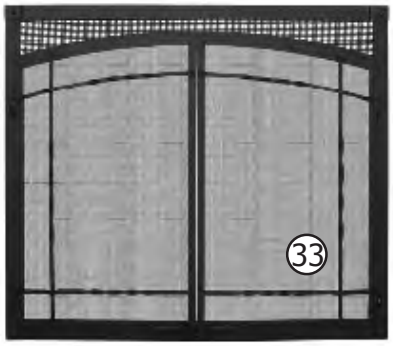

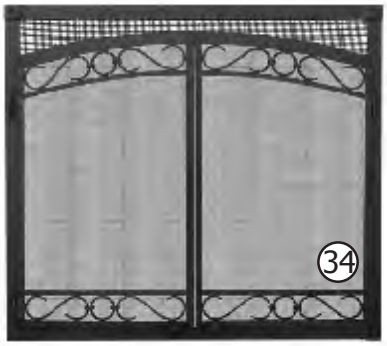

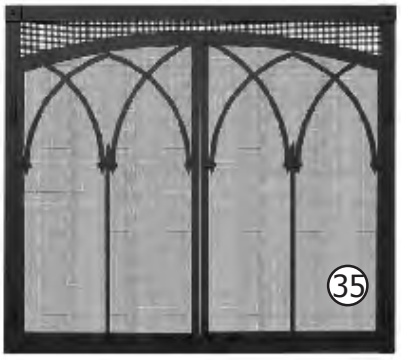

Parts List

Item	Number	Items
1	50-2002	Glass Door Assembly
2	50-2001	Door Tool
3	50-1957	Panel Set - Porcelain
4	50-1944	Panel Set - October
5	50-1945	Panel Set - Sandstone
6	50-1946	Panel Set - Ledgestone
7	50-1938	Burner - Glass media
8	50-1975	Burner - Log / Ember Bed
9	50-1977	Log Set
10	50-1980	Crushed Glass - White
11	50-1981	Crushed Glass - Black
12	50-1978	Refractory Burner Trim Black
13	50-2004	Valve Assembly
14	50-1572	Fan Controller Module
15	50-2005	IPI Burner Controller
16	50-2007	Remote Receiver
17	50-2006	Transmitter
18	50-2008	Wire Harness - Receiver
19	50-2009	Wire Harness - IPI
20	50-2010	Pilot Assembly
21	50-1941	Burner Accent Kit - October
21	50-1943	Burner Accent kit - Sand Stone
21	50-1942	Burner Accent Kit - Ledgestone
22	50-2011	Vent Restrictor Set
23	50-2012	Fireplace Facing Kit
24	50-1939	Rock Accents
25	50-1973	Glass Burner Accent - Ledgestone
26	50-1958	Glass Burner Accent - Sandstone
27	50-1935	Westgate Heat Distribution Kit
28	50-1970	Power Vent Kit
29	50-1976	Cast Grate

Item	Number	Items
30	50-1947	Door Trim Kit W/ Screen - Black
31	50-1948	Arched Ovation - Antique Copper
31	50-1949	Arched Ovation - Natural Iron
31	50-1950	Arched Ovation - Black
32	50-1951	Square Ovation - Antique Copper
32	50-1952	Square Ovation - Natural Iron
32	50-1953	Square Ovation - Black
33	50-1954	Gate House Face - Black
34	50-1955	Town House Face - Black
35	50-1956	Carriage House Face - Black
36	50-1936	LPG Conversion Kit
36	50-2030	NG Conversion Kit
36	EC-019	Pilot Orifice (Injector) NG Threaded
36	EC-020	Pilot Orifice (Injector) LP Threaded
	50-1940	Log Burner Kit
	50-2013	Firebox Liner Set - Herring Bone
	50-2014	Log Burner Accent Set - Herring Bone
	30-043	Sit Pilot ⅛" Tube W/end Ferules - 1 Pc
	50-1982	Light Bulbs Set Of 2 Part
	50-1983	Pilot Flame Sensor (Long Ceramic)
	50-1984	Pilot Bypass Switch
	50-1985	Valve Access Panel Gasket
	50-2003	Owners Manual
	50-2163	Technical Manual
	50-2028	Light Circuit Wire Harness
	50-2029	Main Orifice Tray Gasket
	50-2031	Fan Control Module C/w Velcro Strap
	50-2032	Light Bulb Cover (Specify Colour)
	50-634	Dual Bulb Door Gasket (10ft)
	20-034	Halogen Cycle (Pin Socket)

WARRANTY

Sherwood Industries Ltd. is the manufacturer of the Westgate line of heating products. At Sherwood Industries, our commitment to the highest level of quality and customer service is the most important thing we do. Each Westgate stove is built on a tradition of using only the finest materials and is backed by our Exclusive Lifetime Limited Warranty to the original purchaser. With Westgate, you're not just buying a fireplace or stove, you're buying a company with years of unequalled performance and quality.

Limited Lifetime Warranty:
Under this warranty, Sherwood Industries Ltd. covers the fireplace or stove body and accessories against defects in materials and workmanship, for part repair or replacement for the first seven (7) years and limited labour for the first two (2) years to the original purchaser. This Warranty covers: Firebox, Heat Exchanger, Steel Firebox Panels, Ceramic Logs & Panels, Burner, Ceramic Glass, Pedestals, Panels and Legs. Please see the exclusions and limitation section below as certain restrictions and exclusions apply to this warranty.

Limited Two (2) Year Warranty:
Under this warranty, Sherwood Industries Ltd. covers: Gas Assembly, Blower, Blower control, Temperature Sensors and Wire Harness against defects in materials and workmanship, for part repair or replacement for the first two (2) years and limited labour for the first two (2) years to the original purchaser. Please see the exclusions and limitation section below as certain restrictions and exclusions apply to this warranty.

Limited One (1) Year Warranty:
Under this warranty, Sherwood Industries Ltd. covers all exterior surface finishes against defects in materials and workmanship, for part repair or replacement and limited labour for the first (1) year to the original purchaser. Please see the exclusions and limitations section below as certain restrictions and exclusions apply to this warranty.
Here is how our Warranty works
If you have any concerns with your Westgate product, please contact the dealer where you purchased the fireplace or stove. Your dealer shall make all claims under this warranty in writing.

To the Dealer
When filling out a warranty claim, please complete the following information on an official warranty claim form:
Customer information: Name, address and telephone number of purchaser and date of purchase.
Dealer information: Date of installation, name of installer and dealer, serial number of the appliance, nature of complaint, defects or malfunction, description and part numbers of any parts replaced.

To the Distributor
Sign and verify that work and information are correct.

Exclusions and Limitations:
1. This Warranty does not cover tarnish, discoloration or wear on the plating or paint.
2. This Warranty excludes wear and tear or breakage caused by cleaning, moving or service on log set and panels.
3. A qualified installer must install this stove or fireplace. This Limited Warranty covers defects in materials and workmanship only if the product has been installed in accordance with local building and fire codes; in their absence, refer to the owner's manual. If the product is damaged or broken as a result of any alteration, willful abuse, mishandling, accident, neglect, or misuse of the product, the Limited Warranty does not apply.
4. The stove must be operated and maintained at all times in accordance with the instructions in the Owner's Manual. If the unit shows signs of neglect or misuse, it is not covered under the terms of this Warranty policy. Performance problems due to operator error will not be covered by the Limited Warranty policy.
5. As this is a heating appliance, some changes in colour of surface finishes may occur. This is not a flaw and as such is not covered under this warranty.
6. Some minor expansion, contraction, or movement of certain parts and resulting noise, is normal and not a defect and, therefore, is not covered under this Limited Warranty.
7. Misuse includes over-firing. Over-firing this appliance can cause serious damage and will nullify the Limited Warranty.
8. The Limited Warranty will cover glass thermal breakage only and will not cover misuse of the stove glass, including but not limited to glass that is struck, has surface contaminates or has had harsh or abrasive cleaners used on it.
9. This warranty does not cover products made or provided by other manufacturers and used in conjunction with the operation of this stove without prior authorization from Sherwood Industries Ltd. The use of such products may nullify the Limited Warranty on this stove. If unsure as to the extent of this Limited Warranty, contact your authorized Westgate dealer before installation.
10. Sherwood Industries Ltd. will not be responsible for inadequate performance caused by environmental conditions.
11. The Limited Warranty does not cover installation and operational related problems caused by downdrafts or spillage caused by environmental conditions. Environmental conditions include but are not limited to nearby trees, buildings, roof tops, wind, hills, mountains, inadequate venting or ventilation, excessive offsets, negative air pressures or other influences caused by mechanical systems such as furnaces, fans, clothes dryers etc.

WARRANTY

12. The Limited Warranty is void if:
    a) The stove has been operated in atmospheres contaminated by chlorine, fluorine or other damaging chemicals.
    b) The stove is subject to submersion in water or prolonged periods of dampness or condensation.
    c) Any damage to the unit, combustion chamber or other components due to water, or weather damage which is the result of, but not limited to, improper chimney/venting installation.
    c) Salt air in coastal areas or high humidity can be corrosive to the finish; these environments can cause rusting. Damage caused by salt air or high humidity is not covered by the Limited Warranty.
13. Exclusions to the Limited Warranty include: injury, loss of use, damage, failure to function due to accident, negligence, misuse, improper installation, alteration or adjustment of the manufacturer's settings of components, lack of proper and regular maintenance, alteration, or act of God.
14. The Limited Warranty does not cover damage caused to the fireplace or stove while in transit. If this occurs, do not operate the stove and contact your courier and/or dealer.
15. Limited Warranty does not extend to or include firebox paint, door or glass gaskets with damage caused by normal wear and tear, or exterior paint discoloration or chipping, worn gaskets, etc.
16. The Limited Warranty does not include damage to the unit caused by abuse, improper installation, or modification of the unit.
17. Damage to plated surfaces caused by fingerprints, scratches, melted items, or other external scores and residues left on the plated surfaces from the use of abrasive cleaners or polishes is not covered in this warranty.
18. The Limited Warranty does not cover tarnish, discoloration or wear on the plated surfaces.
19. The paint on the Metal Brick Liner may peel. This is due to the extreme conditions applied to the paint during normal usage. It is not a flaw and is not covered under warranty.
20. Sherwood Industries Ltd. is free of liability for any damages caused by the fireplace or stove, as well as inconvenience expenses and materials. The Limited Warranty does not cover incidental or consequential damages.
21. The Limited Warranty does not cover any loss or damage incurred by the use or removal of any component or apparatus to or from the Westgate fireplace or stove without the express written permission of Sherwood Industries Ltd. and bearing a Sherwood Industries Ltd. label of approval.
22. Any statement or representation of Westgate products and their performance contained in Westgate advertising, packaging literature, or printed material is not part of the Limited Warranty.
23. The Limited Warranty is automatically voided if the fireplace or stove's serial number has been removed or altered in any way. If the stove is used for commercial purposes, it is excluded from the Limited Warranty.
24. No dealer, distributor, or similar person has the authority to represent or warrant Westgate products beyond the terms contained within the Limited Warranty. Sherwood Industries Ltd. assumes no liability for such warranties or representations.
25. Sherwood Industries Ltd. will not cover the cost of the removal or re-installation of the stove, hearth, facing, mantels, venting or other components.
26. Labour to replace or repair items under this Limited Warranty will be covered per our warranty service fee reimbursement schedule. Labour rates are set per component and as such total labour costs may not be covered.
27. Sherwood Industries Ltd. is not liable for freight or labour on any stove replaced in-field and is not liable for travel costs for service work. In the event of in-home repair work, the customer will pay any in-home travel fees or service charges required by the Authorized Dealer.
28. At no time will Sherwood Industries Ltd. be liable for any consequential damages which exceed the purchase price of the unit. Sherwood Industries Ltd. has no obligation to enhance or modify any stove once manufactured (example: as a stove evolves, field modifications or upgrades will not be performed).
29. This Limited Warranty is applicable only to the original purchaser and it is non-transferable.
30. This warranty only covers Westgate products that are purchased through an authorized Westgate dealer.
31. If for any reason any section of the Limited Warranty is declared invalid, the balance of the warranty remains in effect and all other clauses shall remain in effect.
32. The Limited Warranty is the only warranty supplied by Sherwood Industries Ltd., the manufacturer of the stove. All other warranties, whether expressed or implied, are hereby expressly disclaimed and purchaser's recourse is expressly limited to the Limited Warranty.
33. Sherwood Industries Ltd. and its employees or representatives will not assume any damages, either directly or indirectly, caused by improper usage, operation, installation, servicing or maintenance of this stove.
34. Sherwood Industries Ltd. reserves the right to make changes without notice. Please complete and mail the warranty registration card and have the installer fill in the installation data sheet in the back of the manual for warranty and future reference.
35. Sherwood Industries Ltd. is responsible for stocking parts for a maximum of seven (7) years after discontinuing the manufacture or incorporation of the item into its products. An exception to this would be if an OEM supplier is not able to supply a part.

Installation Data Sheet

The following information must be recorded by the installer for warranty purposes and future reference.

NAME OF OWNER:

_____

ADDRESS:

_____

_____

_____

PHONE:_____

NAME OF DEALER:

_____

ADDRESS:

_____

_____

_____

PHONE:_____

MODEL:_____

SERIAL NUMBER:_____

DATE OF PURCHASE: _____ (dd/mm/yyyy)

DATE OF INSTALLATION:_____(dd/mm/yyyy)

☐ NATURAL GAS (NAT) ☐ PROPANE(LPG)

INLET GAS PRESSURE:_____in wc

MAIN BURNER ORIFICE:_____# DMS

PILOT ORIFICE #_____OR_____in diam.

INSTALLER'S SIGNATURE:

_____

NAME OF INSTALLER:

_____

ADDRESS:

_____

_____

_____

PHONE:_____

MANUFACTURED BY:
SHERWOOD INDUSTRIES LTD.
6782 OLDFIELD RD. SAANICHTON, BC, CANADA V8M 2A3
December 4, 2009
www.westgatefireplaces.com
C-12029