SHERWOOD INDUSTRIES IS AN ENVIRONMENTALLY RESPONSIBLE COMPANY. THIS MANUAL IS PRINTED ON RECYCLED PAPER.

PLEASE KEEP THESE INSTRUCTIONS FOR FUTURE REFERENCE

Enviro

PELLET STOVE

Evolution-A

TECHNICAL MANUAL



Contact your building or fire officials about restrictions and installation inspection requirements in your area.

INTERTEK CM C Warnock Hersey US

PLEASE READ THIS ENTIRE MANUAL BEFORE INSTALLATION AND USE OF THIS PELLET-BURNING ROOM HEATER. FAILURE TO FOLLOW THESE INSTRUCTIONS COULD RESULT IN PROPERTY DAMAGE, BODILY INJURY OR EVEN DEATH.

50-1483

Table of Contents

Introduction....3
- Important Safety Data....3
- Safety Warnings And Recommendations....3

Specifications....5
- Dimensions....5
- Rating Label Location....5
- Rating Label....6

Installation....7
- Deciding Where to Locate your Pellet Appliance....7
- Removing Pellet Stove From Pallet....7
- Clearances to Combustibles....8
- Alcove Clearances....8
- Optional Hearth Pad Installation....9
- Thermostat Installation....9
- Vent Termination Requirements....10
- Fresh-Air....11
- Exhaust And Fresh Air Intake Locations....11
- Mobile Home Installation....12
- Horizontal Exhaust Through Wall Installation....12
- Corner Through Wall Installation....12
- Through Wall With Vertical Rise and Horizontal Termination Installation- Recommended....14
- Through Concrete Wall With Vertical Rise Installations....14
- Inside Vertical Installations....15
- Outside Vertical Installations....15
- Hearth Mount Installation....16
- Exterior Mounted Exhaust Blower....17
- Typical Through Wall With Exterior Blower Kit Installation - Horizontal Termination....18
- Typical Through Wall With Exterior Blower Kit Installation - Vertical Termination....19
- Optional Slider/Damper Installation....19
- Slider/Damper Set-Up....20

Troubleshooting....21
Wiring Diagram....24
Parts List....25
Parts Diagram - Components....27
Parts Diagram - Steel....28
Warranty....29
Installation Data Sheet....32

Introduction

* **This manual is designed for the technician in conjunction with the owner's manual.** *

Important Safety Data:

Please read this entire Owner's Manual before installing or operating your ENVIRO Pellet Stove. Failure to follow these instructions may result in property damage, bodily injury or even death. Contact your local building or fire official to obtain a permit and any information on installation restrictions and inspection requirements for your area.

To prevent the possibility of a fire, ensure that the appliance is properly installed by adhering to the installation instructions. An ENVIRO dealer will be happy to assist you in obtaining information with regards to your local building codes and installation restrictions.

Be sure to maintain the structural integrity of the home when passing a vent through walls, ceilings, or roofs.

The stove's exhaust system works with negative combustion chamber pressure and a slightly positive chimney pressure. It is very important to ensure that the exhaust system be sealed and airtight. The ash pan and viewing door must be locked securely for proper and safe operation of the pellet stove.

Do not burn with insufficient combustion air. A periodic check is recommended to ensure proper combustion air is admitted to the combustion chamber. Setting the proper combustion air is achieved by adjusting the slider damper located on the left side of the stove.

When installing the stove in a mobile home, it must be electrically grounded to the steel chassis of the home and bolted to the floor. Make sure that the structural integrity of the home is maintained and all construction meets local building codes.

Minor soot or creosote may accumulate when the stove is operated under incorrect conditions such as an extremely rich burn (black tipped, lazy orange flames).

If you have any questions with regard to your stove or the above-mentioned information, please feel free to contact your local dealer for further clarification and comments.

Safety Warnings And Recommendations:

Caution: Do not connect to any air distribution duct or system.
Do not burn garbage or flammable fluids such as gasoline, naptha or engine oil.
Unit hot while in operation. Keep children, clothing and furniture away. Contact may cause skin burns.

SOOT: Operation of the stove with insufficient combustion air will result in the formation of soot which will collect on the glass, the heat exchanger, the exhaust vent system, and may stain the outside of the house. This is a dangerous situation and is inefficient. Frequently check your stove and adjust the slider/damper as needed to ensure proper combustion. **See: "Slider/Damper Setting".**

CLEANING: There will be some build up of fly ash and small amounts of creosote in the exhaust. This will vary due to the ash content of the fuel used and the operation of the stove. It is advisable to inspect and clean the exhaust vent semi-annually or every two tons of pellets.

Introduction

ELECTRICAL: The use of a surge protected power bar is recommended. The unit must be grounded. The grounded electrical cord should be connected to a standard 115 volts (4.7 Amps), 60 hertz electrical outlet. Be careful that the electrical cord is not trapped under the appliance and that it is clear of any hot surfaces or sharp edges and also must be accessible. If this power cord should become damaged, a replacement power cord must be purchased from the manufacture or a qualified ENVIRO dealer. This unit's maximum power requirement is 540 watts.

GLASS: Do not abuse the glass by striking or slamming the door. Do not attempt to operate the stove with broken glass. The stove uses ceramic glass. Replacement glass must be purchased from an ENVIRO dealer. Do not attempt to open the door and clean the glass while the unit is in operation or if glass is hot. To clean the glass, use a soft cotton cloth and mild window cleaner, gas or wood stove glass cleaner, or take a damp paper towel and dip into the fly ash. This is a very mild abrasive and will not damage the glass.

FLAMMABLE LIQUIDS: Never use gasoline, gasoline-type lantern fuel, kerosene, charcoal lighter fluid, or similar liquids to start or "freshen up" a fire in the heater. Keep all such liquids well away from the heater while it is in use.

SMOKE DETECTOR: Smoke detectors should be installed and maintained in the structure when installing and operating a pellet burning appliance.

OPERATION: The ash pan and door must be closed securely for proper and safe operation of the pellet stove. Also ensure all gaskets on the door are checked and replaced when necessary.

INSTALLATION: Be sure to maintain the structural integrity of your home when passing a vent through walls, ceilings, or roofs. It is recommended that the unit be secured into its position in order to avoid any displacement.

DO NOT INSTALL A FLUE DAMPER IN THE EXHAUST VENTING SYSTEM OF THIS UNIT.

DO NOT CONNECT THIS UNIT TO A CHIMNEY FLUE SERVING ANOTHER APPLIANCE.

FRESH AIR: Outside Fresh Air connection is optional. Must be connected to all units installed in Mobile and "Air Tight Homes" (R2000) or where required by local codes. Consider all large air moving devices when installing your unit and provide room air accordingly. Limited air for combustion may result in poor performance, smoking and other side effects of poor combustion.

If you have any questions with regards to your stove or the above-mentioned information, please feel free to contact your local dealer for further clarification and comments.

SINCE SHERWOOD INDUSTRIES LTD. HAS NO CONTROL OVER THE INSTALLATION OF YOUR STOVE, SHERWOOD INDUSTRIES LTD. GRANTS NO WARRANTY IMPLIED OR STATED FOR THE INSTALLATION OR MAINTENANCE OF YOUR STOVE. THEREFORE, SHERWOOD INDUSTRIES LTD. ASSUMES NO RESPONSIBILITY FOR ANY CONSEQUENTIAL DAMAGE(S).

SAVE THIS INSTRUCTION MANUAL FOR FUTURE REFERENCE

Specifications

Dimensions:

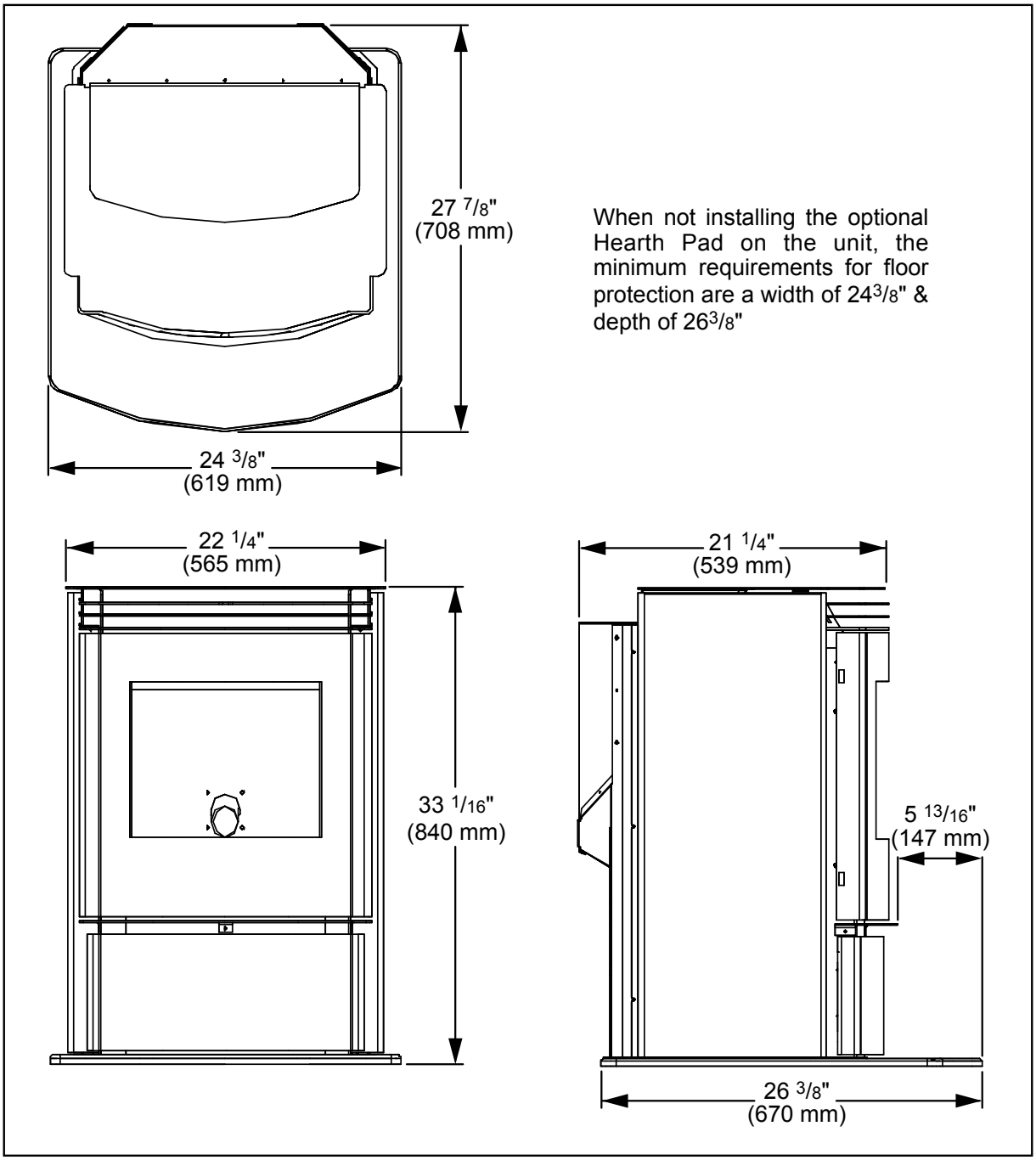

Figure 1: Dimensions of EF5.

Rating Label Location:

The rating label is located on the inside of the ash pan cover.

SPECIFICATIONS

RATING LABEL:

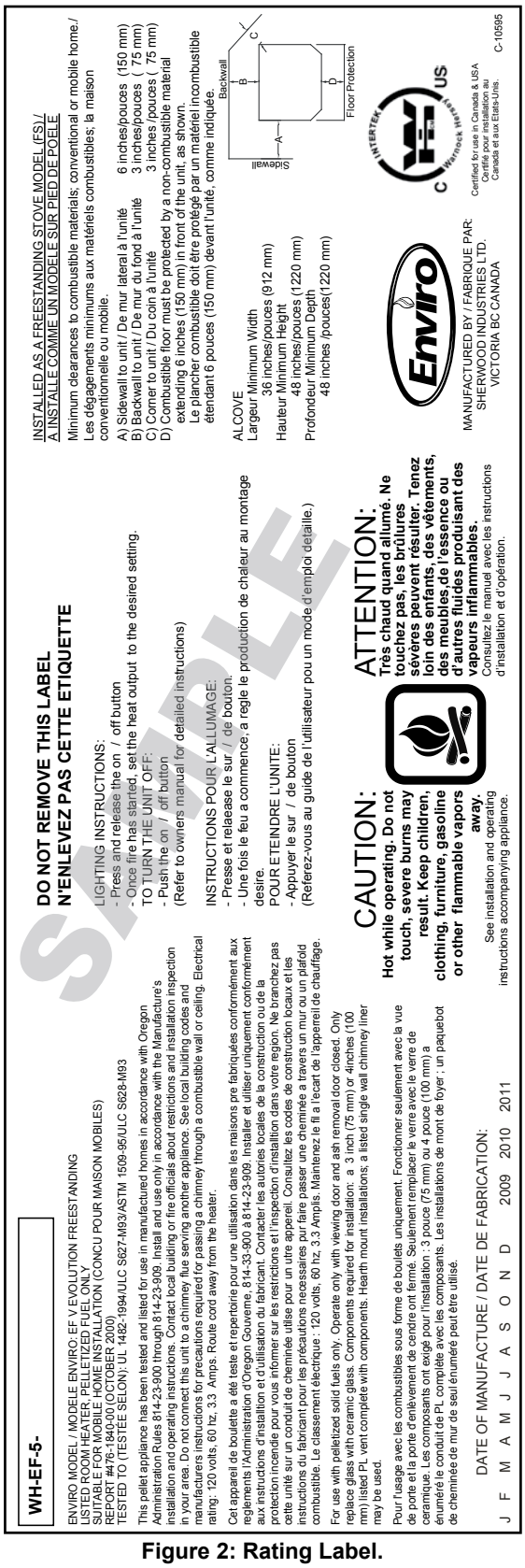

Figure 2: Rating Label.

Installation

Deciding Where to Locate your Pellet Appliance:

1. Check clearances to combustibles.
2. Do not obtain combustion air from an attic, garage or any unventilated space. Combustion air may be obtained from a ventilated crawlspace.
3. Do not install the stove in a bedroom.
4. You can vent the stove through an exterior wall behind the unit or connect it to an existing masonry or metal chimney (must be lined if the chimney is over 6" (15 cm) diameter, or over 28 inches² (180 cm²) cross sectional area). An interior vent can be used with approved pipe passing through the ceiling and roof.
5. Locate the stove in a large and open room that is centrally located in the house. This will optimize heat circulation.
6. The power cord is 8 feet (2.43 m) long and may require a grounded extension cord to reach the nearest electrical outlet.

NATIONAL FIREPLACE INSTITUTE
NFI
CERTIFIED
www.nficertified.org

We recommend that our pellet hearth products be installed and serviced by professionals who are certified in the U.S. by the National Fireplace Institute® (NFI) as NFI Pellet Specialists or who are certified in Canada by Wood Energy Technical Training (WETT).

Wood Energy Technical Training
www.wettinc.ca

Removing Pellet Stove From Pallet:

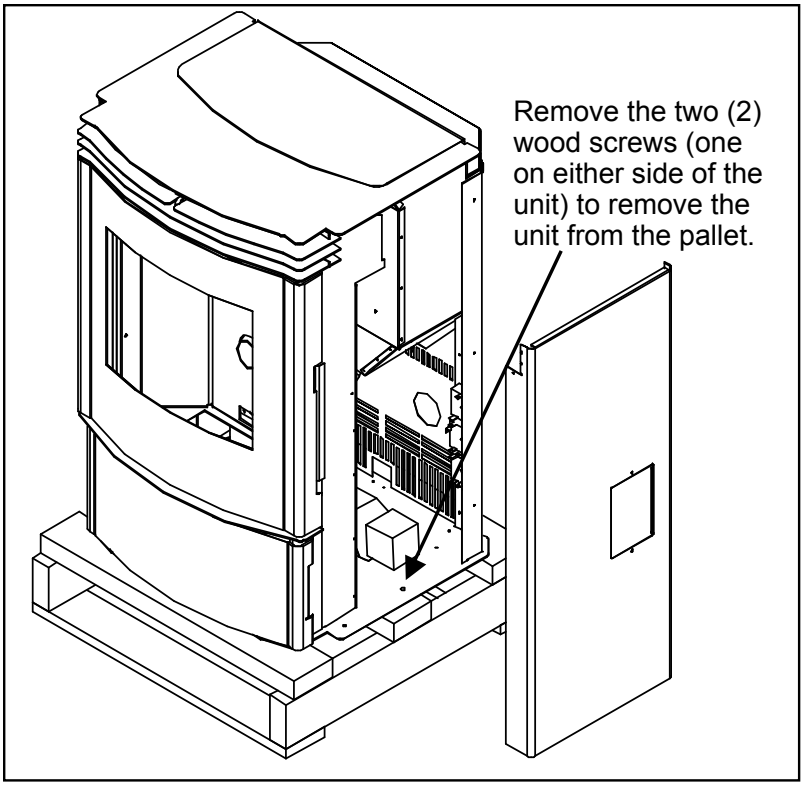

Figure 3: Screws to take out to remove stove from pallet.

1. Remove the right and left hand cabinet sides by loosening the three (3) T-20 Torx screws on the back of the each panel.
2. Remove the one (1) screw located on the front of the cabinet side, behind the top louvers and one (1) screw behind the ash door.
3. Remove the two (2) wood screws that are holding the bottom of the stove to the pallet.
4. Close the side panels.

Installation

Clearances to Combustibles:

This unit can be installed on a combustible floor when installed with the optional hearth pad part EF5-103 (for example linoleum, hardwood flooring). If this unit is to be installed onto a carpeted surface, a hearth pad must be used for stability.

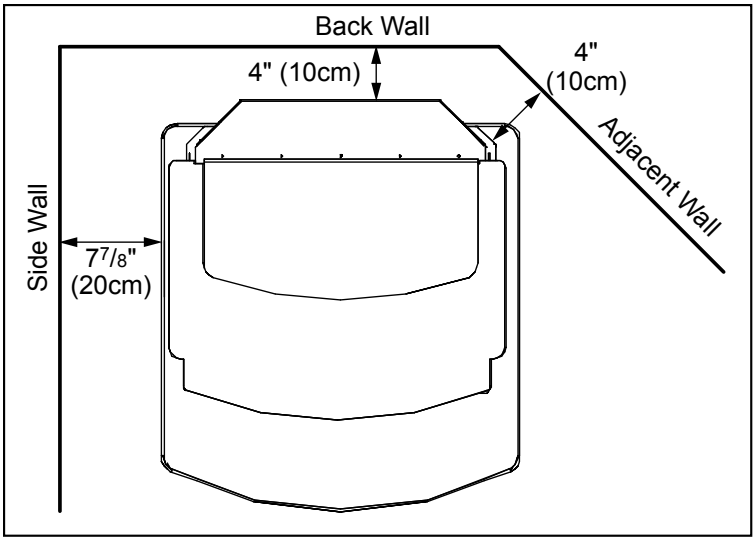

Figure 4: EF5 Clearance to Combustibles.

These dimensions are minimum clearances but it is recommended that you ensure sufficient room for serving, routine cleaning and maintenance.

Side wall to unit	6 inches	(15 cm)
Back wall to unit	3 inches	(7.5 cm)
Corner to unit	3 inches	(7.5 cm)

Alcove Clearances:

This unit may be installed in an alcove. Maintain these clearances to combustibles.

Minimum Alcove width	36 inches	(91 cm)
Minimum Alcove height	48 inches	(122 cm)
Maximum Alcove depth	48 inches	(122 cm)

Install vent at clearances specified by the vent manufacturer.

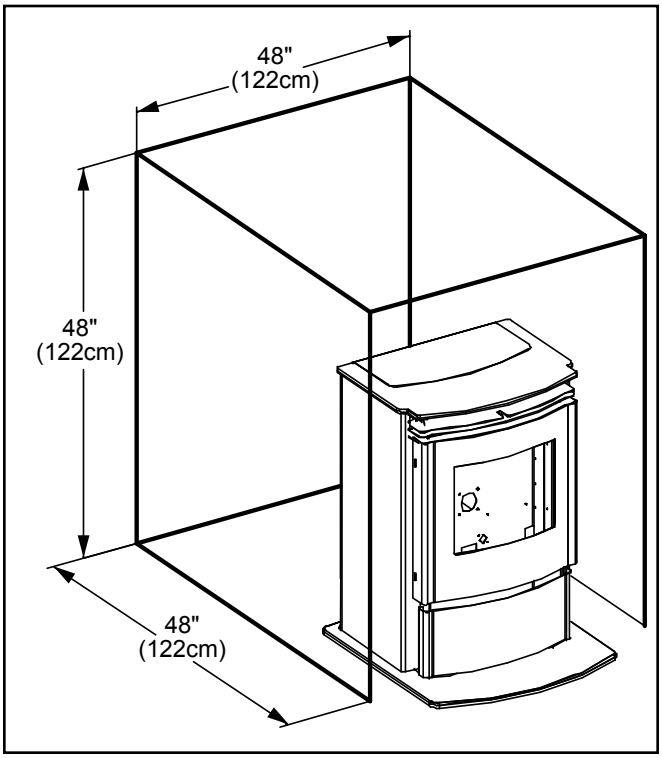

Figure 5: EF5 Minimum Alcove Size.

Optional Hearth Pad Installation:

This unit can be installed on a combustible floor (e.g. linoleum, hardwood flooring) when the Optional Hearth Pad is installed. If this unit is to be installed onto a carpeted surface, a solid pad must be used underneath the Optional Hearth Pad for stability.

Carefully place the the pellet appliance on its back, on the pallet (allow the exhaust tube to fit thru an opening in the pallet). Align the holes in the hearth pad and the unit and install the four (4) screws provided. Stand the unit back up. Adjust the leveling legs to below the Hearth Pad, to support the weight of the unit.

When moving the unit - be careful not to damage the floor or the Hearth Pad.

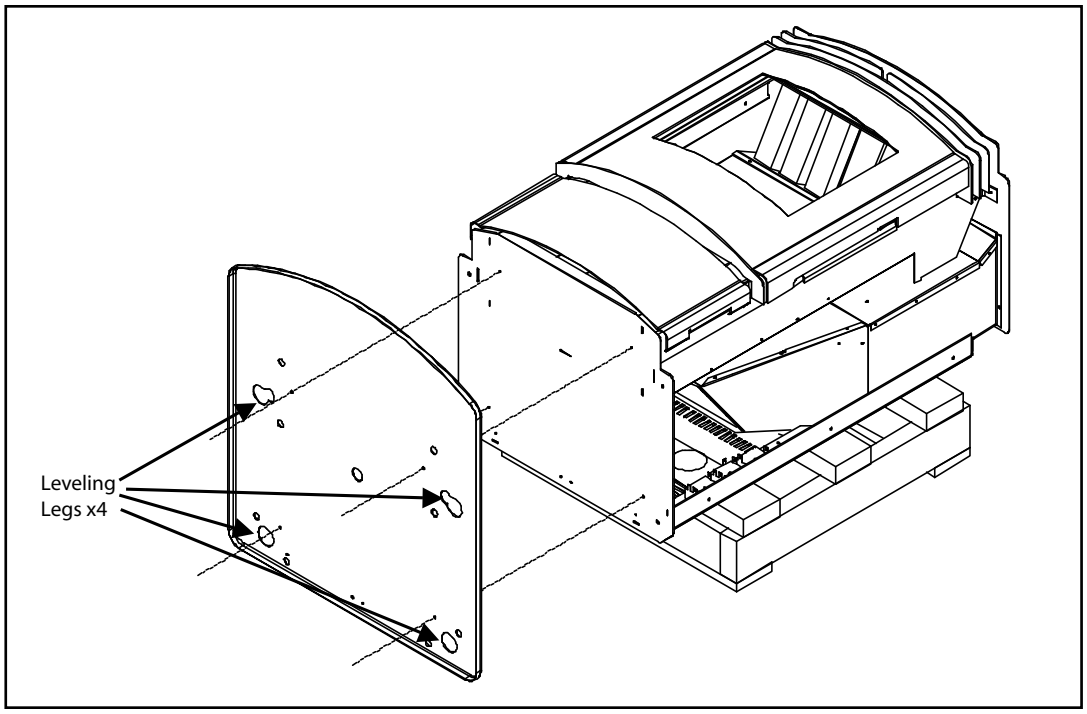

Figure 6: Installing Hearth Pad Pedestal onto EF5.

Thermostat Installation:

1. Install the wall thermostat in a location that is not to close too the unit but will effectively heat the desired area.

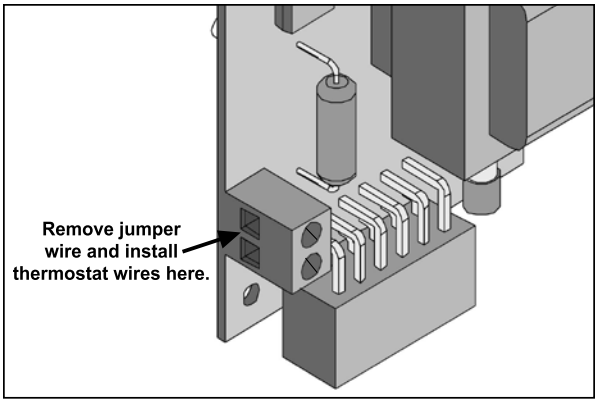

Figure 7: Thermostat wire placement.

2. Install a 12 or 24 Volt Thermostat using an 18 x 2 gauge wire from the unit to the thermostat.

If the unit has been placed in the HI / LOW mode, the unit will be taken to a low or idle setting when the thermostat is not calling for heat. When the thermostat calls for heat, the unit will go to the setting that is displayed on the control board Heat Indicator. If the heating load is not great enough when the stove is on low, the high limit switch will turn the stove off and the switch will have to be manually reset. To reset the high limit switch, remove the right cabinet side. The switch is found behind the control panel. Avoid setting off the high limit switch.

Vent Termination Requirements:

IT IS RECOMMENDED THAT YOUR PELLET STOVE BE INSTALLED BY AN AUTHORIZED DEALER/INSTALLER.

Table 1: Use in conjunction with Figure 8 for allowable exterior vent termination locations.

Letter	Minimum Clearance	Description
A	24 in (61 cm)	Above grass, top of plants, wood, or any other combustible materials.
B	48 in (122 cm)	Beside/below any door or window that may be opened. (18" (46 cm) if outside fresh air installed.)
C	12 in (30 cm)	Above any door or window that may be opened. (9" (23 cm) if outside fresh air installed.)
D	24 in (61 cm)	To any adjacent building, fences and protruding parts of the structure.
E	24 in (61 cm)	Below any eave or roof overhang
F	12 in (30 cm)	To outside corner.
G	12 in (30 cm)	To inside corner, combustible wall (vertical and horizontal terminations).
H	3 ft (91 cm) within a height of 15 ft (4.5 m) above the meter/regulator assembly	To each side of center line extended above natural gas or propane meter/ regulator assembly or mechanical vent.
I	3 ft (91 cm)	From any forced air intake of other appliance
J	12 in (30 cm)	Clearance to non-mechanical air supply inlet to building, or the combustion air inlet to any appliance.
K	24 in (61 cm)	Clearance above roof line for vertical terminations.
L	7 ft (2.13 m)	Clearance above paved sidewalk or paved driveway located on public property.

1. Do not terminate the vent in any enclosed or semi-enclosed areas such as a carport, garage, attic, crawlspace, narrow walkway, closely fenced area, under a sundeck or porch, or any location that can build up a concentration of fumes such as stairwells, covered breezeway, etc.

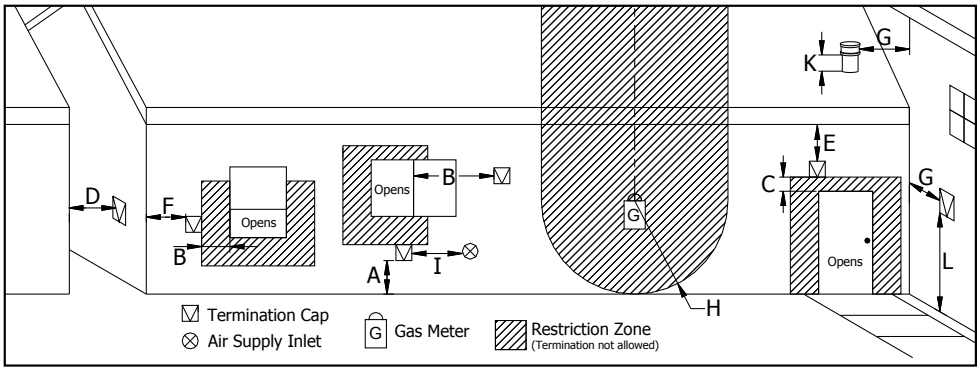

Figure 8: Use in conjunction with Table 1 for allowable exterior vent termination locations.

2. Vent surfaces can become hot enough to cause burns if touched by children. Non-combustible shielding or guards may be required.
3. Termination must exhaust above the inlet elevation. It is recommended that at least five feet of vertical pipe be installed outside when the appliance is vented directly through a wall, to create some natural draft to prevent the possibility of smoke or odor during appliance shut down or power failure. This will keep exhaust from causing a nuisance or hazard from exposing people or shrubs to high temperatures. In any case, the safest and preferred venting method is to extend the vent through the roof vertically.
4. Distance from the bottom of the termination and grade is 12" (30 cm) minimum. This is conditional upon the plants and nature of grade surface. The exhaust gases are hot enough to ignite grass, plants and shrubs located in the vicinity of termination. The grade surface must not be lawn.
5. If the unit is incorrectly vented or the air to fuel mixture is out of balance, a slight discoloration of the exterior of the house might occur. Since these factors are beyond the control of Sherwood Industries Ltd, we grant no guarantee against such incidents.

NOTE: Venting terminals shall not be recessed into walls or siding.

Fresh-Air:

This Heater must have adequate air for proper combustion in the room that it is installed.

A Fresh-air intake is strongly recommended for all installations. Failure to install intake air may result in improper combustion as well as the unit smoking during power failures.

Outside fresh air is mandatory when installing this unit in airtight homes and mobile homes.

When connecting to an outside fresh air source, do not use plastic or combustible pipe. A 2" minimum (51 mm) ID (inside diameter) steel, aluminum or copper pipe should be used. It is recommended, when you are installing a fresh air system, to keep the number of bends in the pipe to a minimum.

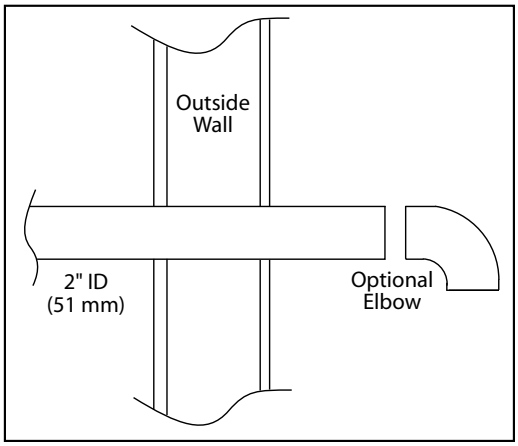

Figure 9: Outside Air Connection.

Exhaust And Fresh Air Intake Locations:

The Exhaust Starter Tube can be installed 2 ways:

Angled towards the center - Use a Tee with vertical for a "centered" vertical installation.
Straight out the back - For horizontal thru the wall and up installation

EXHAUST Location:

Base of unit to center of flue	$10^{15}/_{16}$"	(278 mm)
Center of unit to center of flue	1⅜"	(35 mm)
FRESH AIR INTAKE.		
Base of unit to center of intake	$8^{15}/_{16}$"	(227 mm)
Center of unit to center of intake	4⅛"	(105 mm)

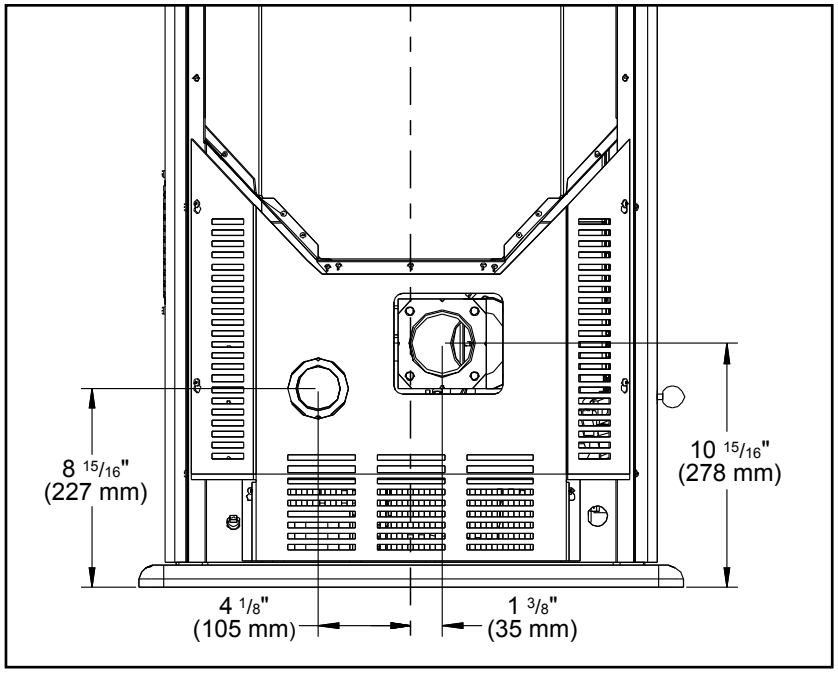

Figure 10: EF5 Inlet and Outlet Location.

Installation

Mobile Home Installation:

- Secure the heater to the floor using the two holes in the pedestal.
- Ensure the unit is electrically grounded to the chassis of your home (permanently).
- Do not install in a room people sleep in.
- Outside fresh air is mandatory. Secure outside air connections directly to fresh air intake pipe and secure with three (3) screws evenly spaced.

CAUTION: THE STRUCTURAL INTEGRITY OF THE MANUFACTURED HOME FLOOR, WALL AND CEILING/ROOF MUST BE MAINTAINED.

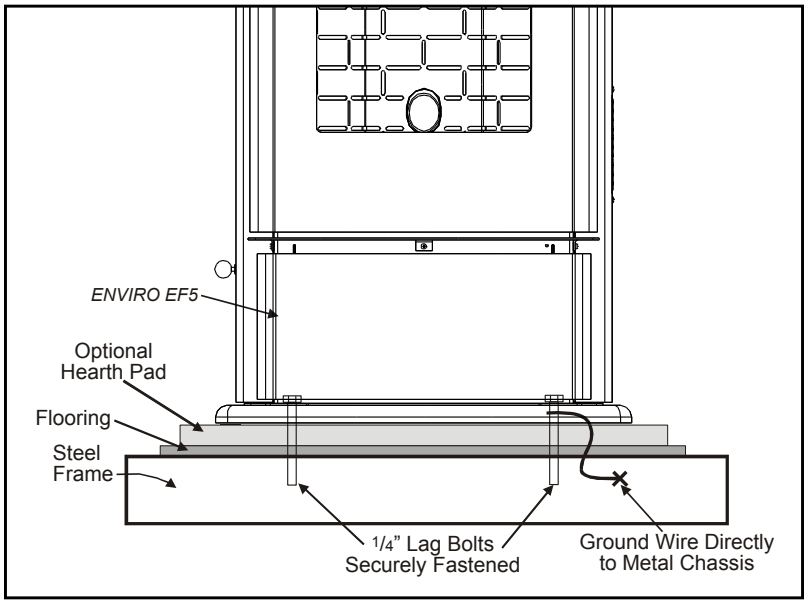

Figure 11: Mobile home installation.

Corner Through Wall Installation:

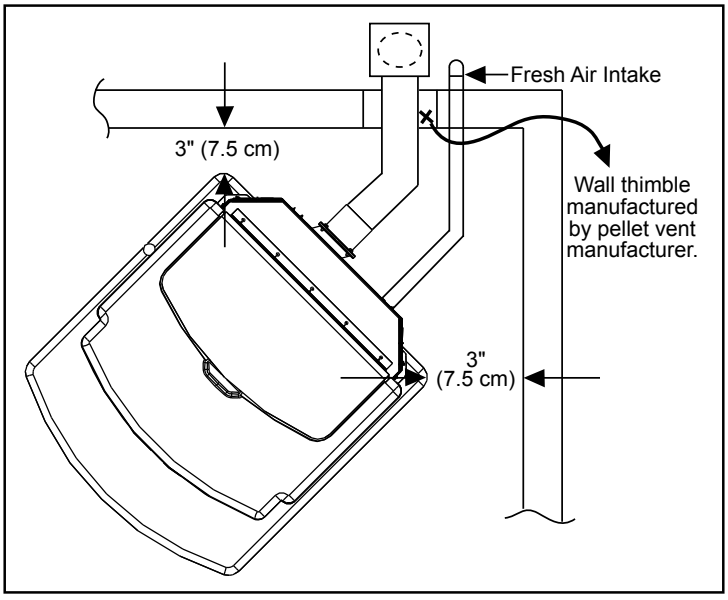

Figure 12: Corner Installation.

Horizontal Exhaust Through Wall Installation:

Vent installation: install vent at clearances specified by the vent manufacturer.

A chimney connector shall not pass through an attic or roof space, closet or similar concealed spaces, or a floor, or ceiling. Where passage through a wall or partition of combustible construction is desired, the installation must conform to CAN/CSA-B365 Installation Code for Solid-Fuel-Burning Appliances and Equipment and with all local regulations, including those referring to regional and national. Only use venting of L or PL type with an inside diameter of 4 inches (100 mm).

1. Place the appliance 15” (37.5 cm) away from the wall. If the stove is to be set on a hearth pad, set the unit on it.
2. Locate the center of the exhaust pipe on the stove. Extend that line to the wall. Once you have located the center point on the wall, refer to pellet vent manufacturer installation instructions for correct hole size and clearance to combustibles.
3. Install the wall thimble as per the instructions written on the thimble. Maintain an effective vapour barrier in accordance with local building codes.
4. Install a length of vent pipe into the wall thimble. Try not to have joints inside the thimble. The pipe should install easily into the thimble.
5. Connect the exhaust vent pipe to the exhaust pipe on the stove. Seal the connection with high temperature silicone.
6. Install the fresh air intake (see Outside Fresh Air Connection).
7. Push the stove straight back, leaving a minimum of 4” (10 cm) clearance from the back of the stove to the wall. Seal the vent pipe to the thimble with high temperature silicone.
8. The pipe must extend at least 12” (30 cm) away from the building. If necessary, bring another length of pipe to the outside of the home to connect to the first section. Do not forget to place high temperature silicone around the pipe that passes through the thimble.
9. Install a vertical pipe, or if all requirements for direct venting are met, install vent termination.The stainless steel cap termination manufactured by the vent manufacturer is recommended. However, when the vent terminates several feet above ground level and there are no trees, plants, etc. within several feet, a 45° elbow can be used as termination. The elbow must be turned down to prevent rain from entering.

NOTE:

- It is recommended that horizontal through wall installations have 3 to 5 feet (91 to 152 cm) of vertical pipe in the system to help naturally draft the unit in the event of extreme weather or a power outage.
- Some horizontal through wall installations may require a “T” and 3 to 5 feet (91 to 152 cm) of vertical pipe outside the building to help draft the unit. This may be required if a proper burn cannot be maintained, after the stove has been tested and the airflow set. This is due to the back pressure in the exhaust caused by airflow around the structure.
- Follow vent manufacturer guidelines for installation of venting. High temp Sealent must be used when connecting vent pipe to the unit’s starter pipe. Improper seals at the vent joints may cause combustion by-products to leak into the room where installed - **seal as required.**

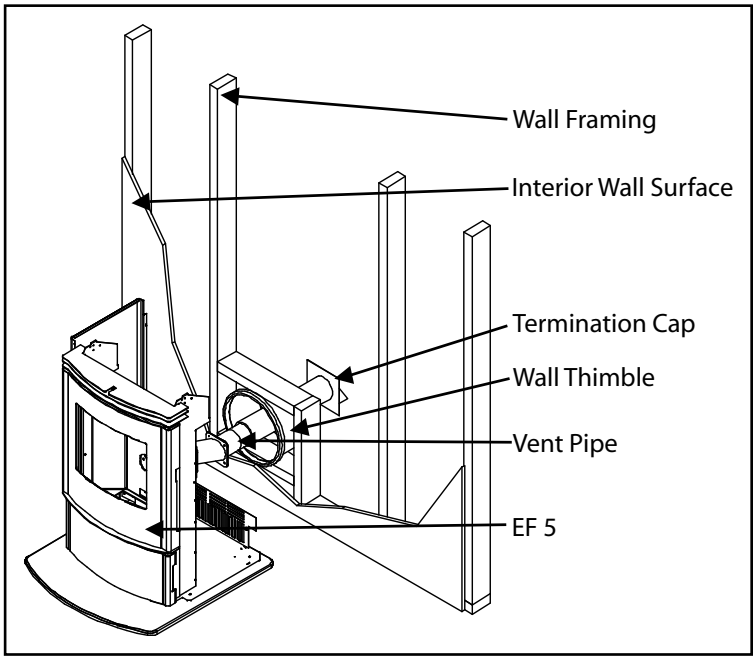

Figure 13: Straight through wall Installation.

Through Wall With Vertical Rise and Horizontal Termination Installation- Recommended:

A 45° elbow with a screen may be used in place of the termination cap (or stainless steel termination hood).

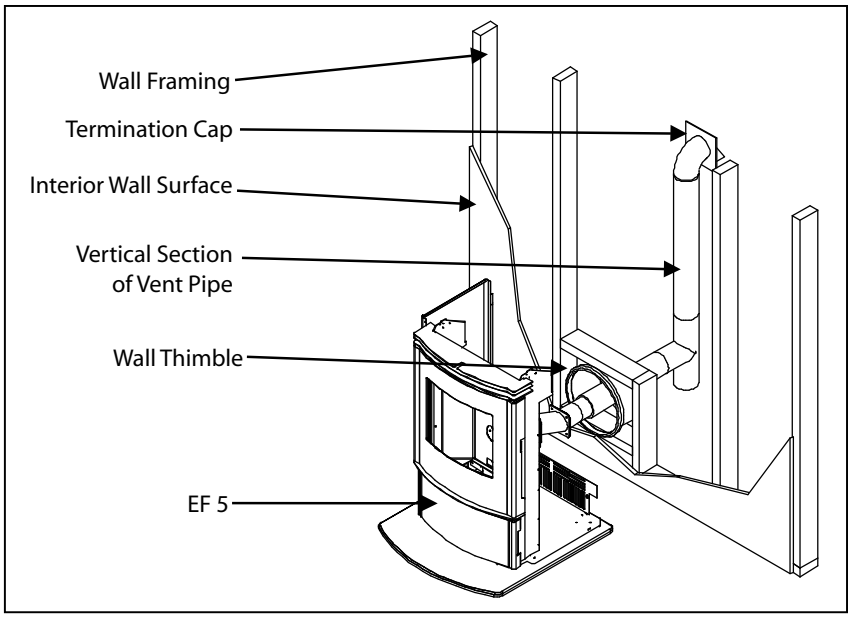

Figure 14: Venting horizontally with rise.

Through Concrete Wall With Vertical Rise Installations:

A 45° elbow with a screen may be used in place of the termination cap (or stainless steel termination hood).

Installation to use if there is a concrete or retaining wall in line with exhaust vent on pellet stove.

The termination must be 12 inches (30 cm) from the outside wall and 12 inches (30 cm) above the ground.

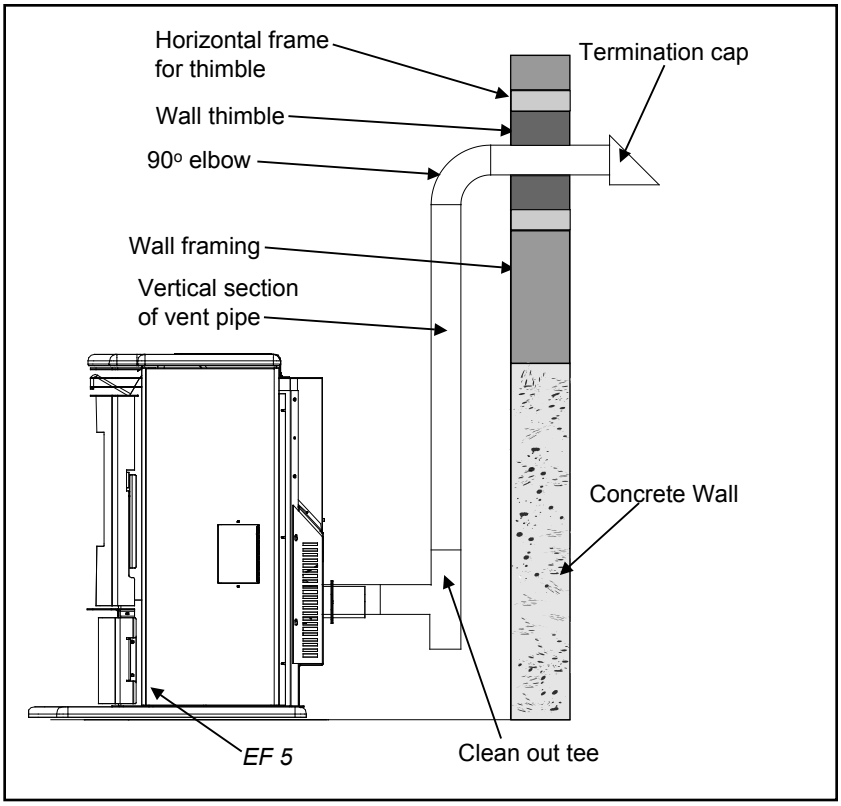

Figure 15: Venting with concrete wall behind unit .

Inside Vertical Installations:

1. Choose a stove location that is ideal. See the section "Deciding Where to Locate your Pellet Appliance."
2. Place a non-combustible hearth pad where necessary.
3. Place the unit on the hearth pad (if installed on a carpeted surface) and space the unit in a manner so when the pellet vent is installed vertically, it will be 3" (7.6 cm) away from a combustible wall.
4. Locate the center of the fresh air intake pipe on the unit. Match that center with the same point on the wall and cut a hole about 1 ⅝" (41 mm) in diameter.
5. Install the fresh air intake pipe.
6. Install the tee with clean out.
7. Install the pellet vent upward from there. When you reach the ceiling, make sure that the vent goes through the ceiling fire stop. Maintain a 3" (7.6 cm) distance to combustibles and keep attic insulation away from the vent pipe. Maintain an effective vapor barrier.
8. Finally, extend the pellet vent to go through the roof flashing.
9. Ensure that the rain cap is approximately 36" (900 mm) above the roof.

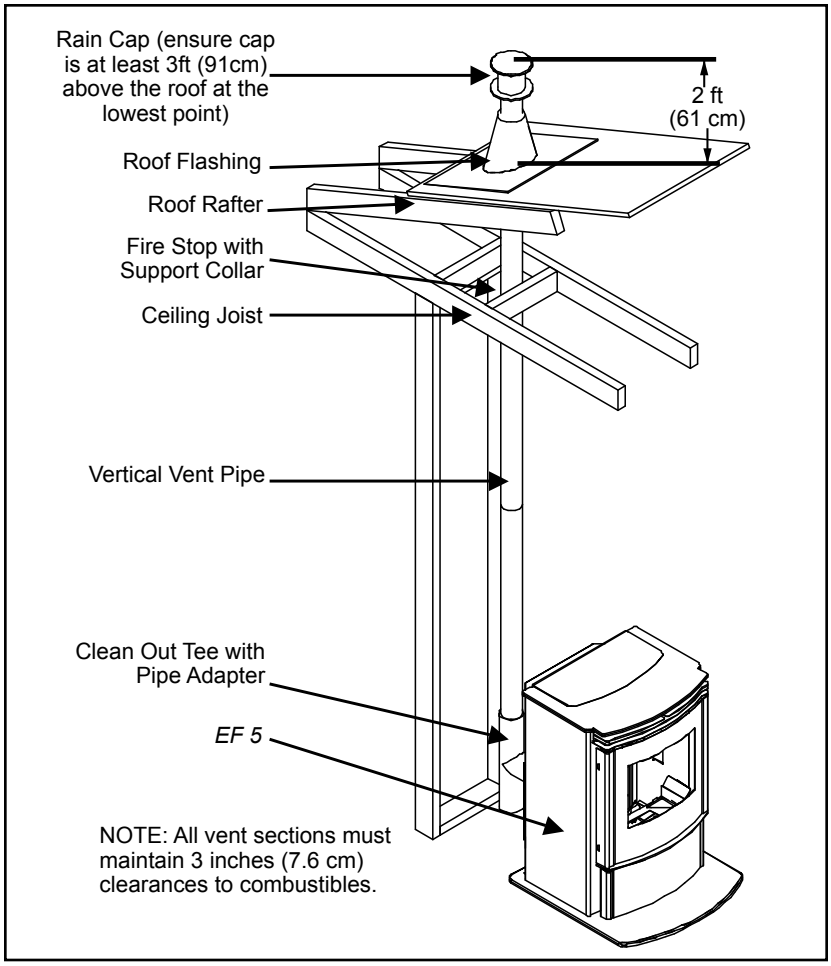

Figure 16: Inside Vertical Installation.

Outside Vertical Installations:

To accomplish a outside vertical pipe installation, follow steps 1 through 5 in the "Inside Vertical Installations - Freestanding" section and then finish it by performing the following (refer to Figure 17).

1. Install a tee with clean out on the outside of the house.
2. Install PL vent upward from the tee. Make sure that you install support brackets to keep the vent straight and secure.
3. Install ceiling thimble and secure the flashing as you go through the roof.
4. Ensure that the rain cap is approximately 36" (91.5 cm) above the roof.

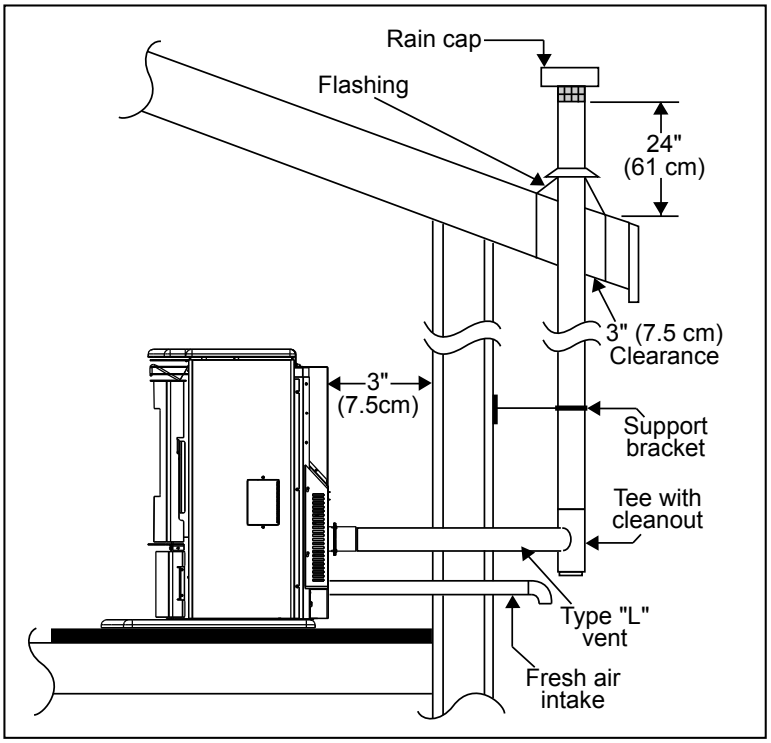

Figure 17: Outside Vertical Installation.

Hearth Mount Installation:

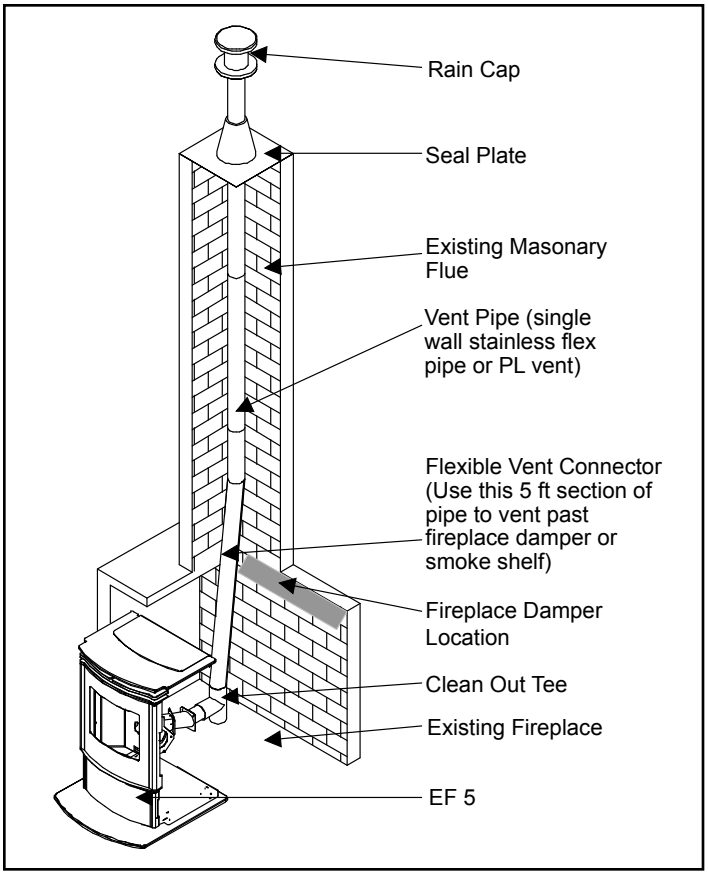

Figure 18: Hearth mount installation.

Refer to Figures 18.

1. Lock fireplace damper in the open position.
2. Install a positive flue connector at the fireplace dampers.
3. Connect a tee or a 90° elbow to the exhaust pipe.
4. Install flexible stainless steel liner or listed pellet vent to the top of the chimney.

Exterior Mounted Exhaust Blower:

The EF5 can be equipped with an externally mounted exhaust blower. This optional kit includes all components necessary to install the exhaust blower on any vertical wall surface.

Choose a location for your stove that meets the requirements stated in your manual and allows installation with the least amount of interference with house framing, plumbing, wiring, etc.

Included in the Exterior Mounted Exhaust Blower Kit are:
1 - Exhaust blower housing box.
1 - Blower cover plate.
1 - Hardware bag

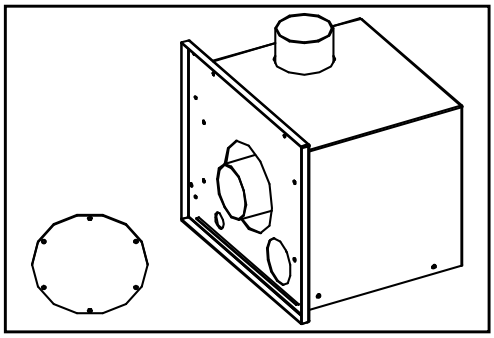

Figure 19: Exterior Blower Kit.

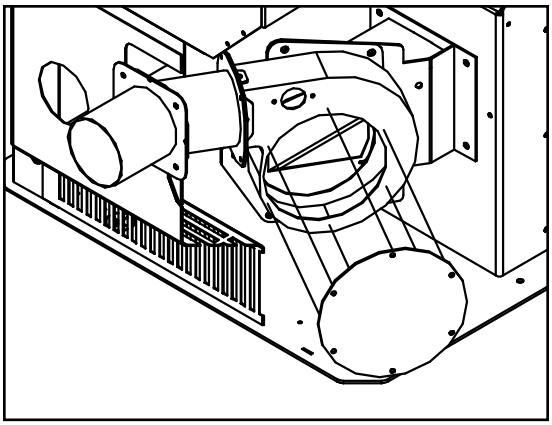

Figure 20: Exterior Blower Kit.

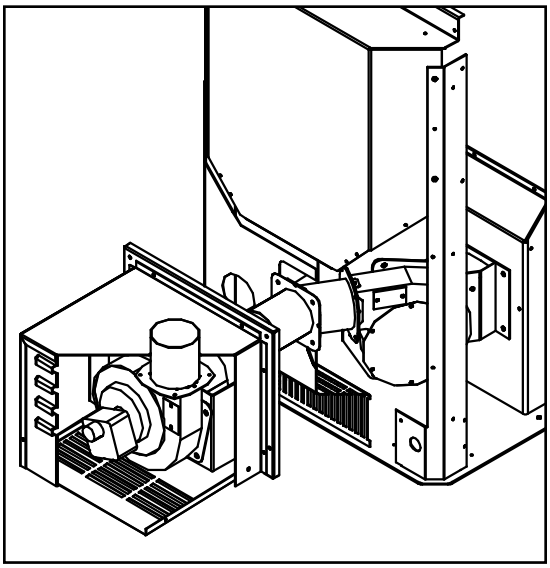

Figure 21: Exterior Blower Kit cut-through.

1. Remove the left hand cabinet side by removing the two (2) screws down the front. Loosen the three screws on the back of the cabinet side and remove panel.
2. Loosen the six (6) screws that hold the back grill in place. Lift the back grill off the screws.
3. Disconnect the Exhaust blower wires from the wire harness. Remove the exhaust blower motor from the housing; six (6) screws. Cover hole in housing with cover plate provided (see Figure 18).
4. Remove the cover from the exhaust blower housing box.
5. Install the exhaust blower housing box into the pipe placed through the wall thimble, seal with high temperature silicone. Fasten the box to the wall with (4) four screws, seal edges of box to wall with clear silicone.
6. Drill a hole through the wall thimble plate for the electrical wires. Pass the armored cable through the wall thimble. Use the strain relief provided. **Do not pass cable through vent hole.**
7. Install the Exhaust Blower motor into the external exhaust blower housing box. Make the electrical connections to the wire harness and exhaust blower.
8. Replace the cover on the Exhaust Box and the back grill of the stove and ensure the screws are tightened down.
9. Install vertical pipe as instructed in appropriate section.

Typical Through Wall With Exterior Blower Kit Installation - Horizontal Termination:

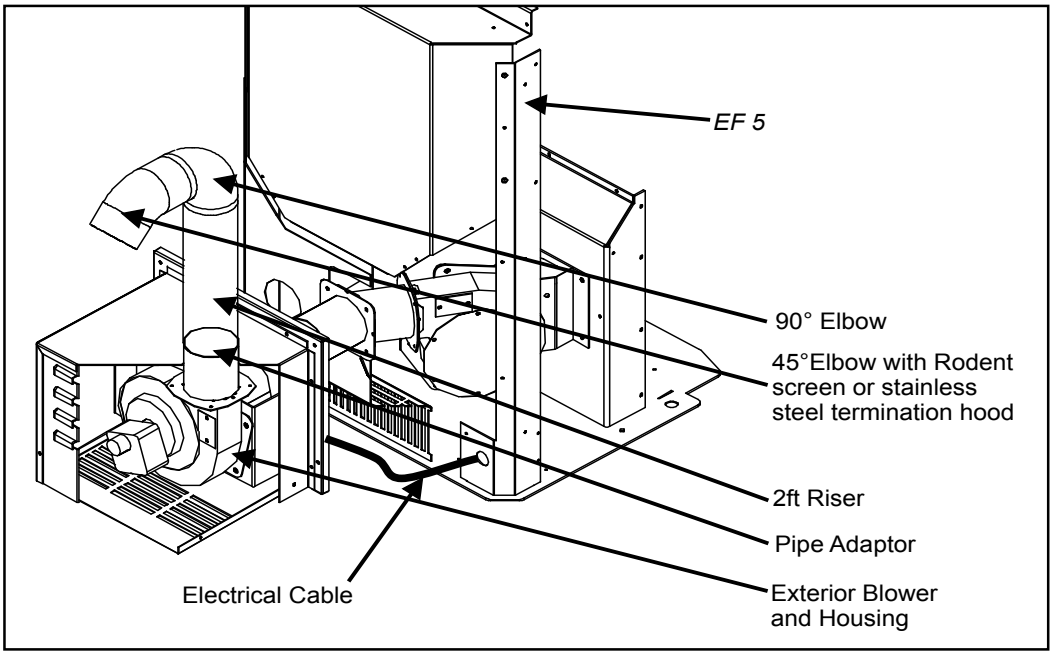

Figure 22: Through Wall Installation with Exterior Blower Kit.

NOTE:
Ensure that all vent connections are installed by placing a small bead of high temperature silicone at each chimney connection.
Also ensure that all vertical vent sections are properly supported and that all clearances to combustibles are maintained in accordance with the vent manufacturer's specifications.

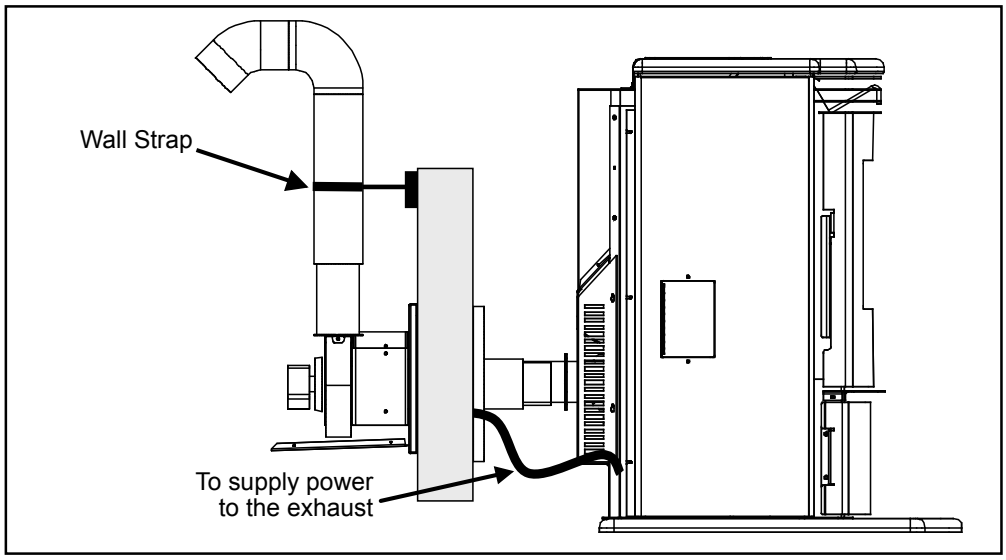

Figure 23: Through Wall Installation with Exterior Blower Kit; Side View.

Install an amour coated electrical cable from the exhaust blower housing, through the wall thimble plate and attach to the pre drilled hole in the left hand rear hopper pillar. Hook up to wires from the exhaust blower wiring harness.

All electrical connections must be in accordance to local code requirements

Typical Through Wall With Exterior Blower Kit Installation - Vertical Termination:

Follow the previous pages for through wall installations. Ensure that vent pipe is properly secured to wall using wall straps. Maintain clearances to combustibles on vent pipe as well as unit.

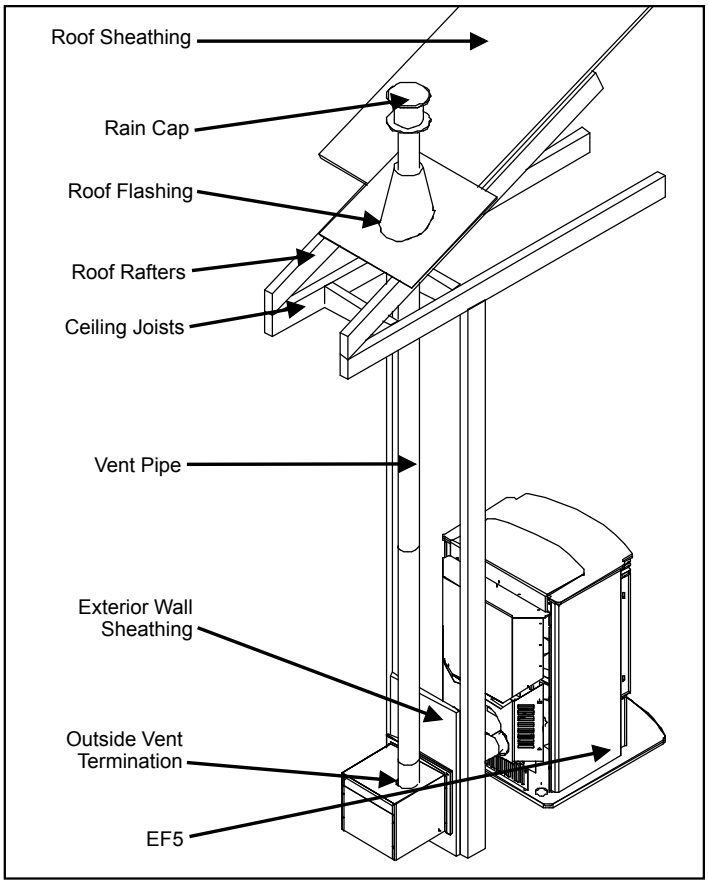

Figure 24: Through Wall Installation with Exterior Blower Kit; Vertical Termination.

Optional Slider/Damper Installation:

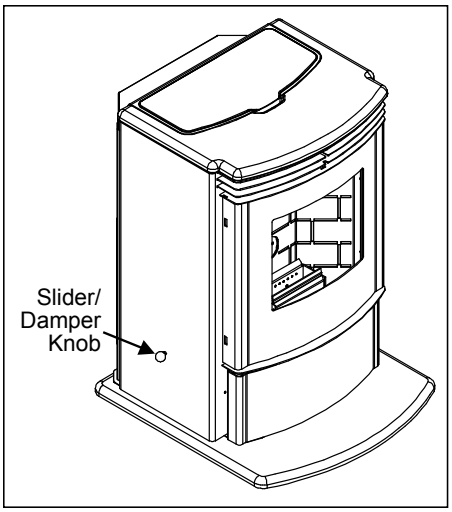

Figure 25: Slider/Damper Knob.

If you wish to adjust the slider damper externally (NOT REQUIRED), please follow the instructions below.

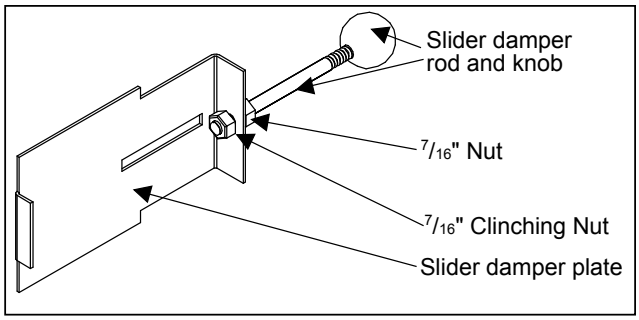

Figure 26: Slider/Damper Assembly.

1. To install the OPTIONAL slider damper rod, remove the left cabinet side and locate the slider damper plate. Install the $^{7}/_{16}$" inch nut onto the slider damper rod, thread all the way to the end of the threads on rod.
2. Slide rod through the hole in the slider damper plate and install the $^{7}/_{16}$" clinching nut onto the rod and tighten completely onto the slider damper plate.
3. Re-install the cabinet side. Install the black knob on the end of the rod. Check slider damper for smooth operation.

Slider/Damper Set-Up:

This is used to regulate the airflow through the pellet stove.

The slider damper is located behind the left side panel. To open the left side panel, undo the one screw located in the upper front corner of the cabinet side between the louvers. Also loosen three screws down the back of the side panel.The combustion exhaust blower is a variable speed blower controlled by the heat output button. This blower will decrease the vacuum pressure inside the stove and as the heat output button is turned down. The vacuum pressure inside the firebox will increase as the combustion exhaust blower increases in speed (higher heat output setting).

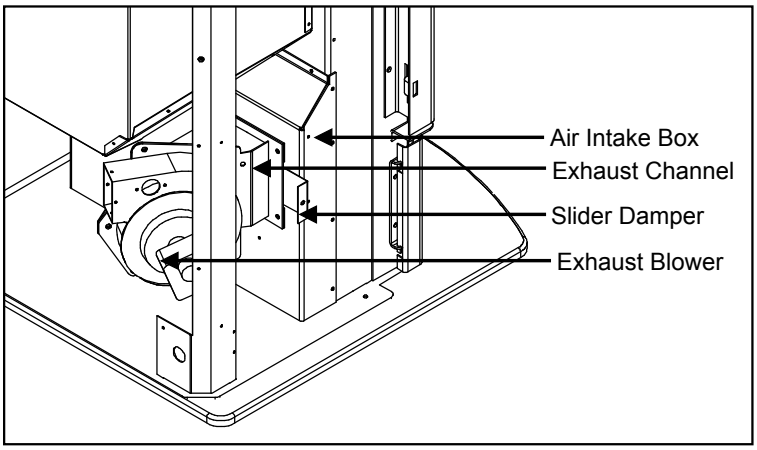

Figure 27: Slider/Damper Plate in Unit.

If the fire should happen to go out and the heat output indicator has been set on the lowest setting, the Slider Damper should be pushed in slightly, decreasing the air in the firebox.

If, after long periods of burning, the fire builds up and overflows the burn pot or there is a build up of clinkers, this would be a sign that the pellet quality is poor, this requires more primary air, the slider damper must be pulled out to compensate. Pulling the slider damper out gives the fire more air.

The easiest way to make sure that an efficient flame is achieved is to understand the characteristics of the fire.

- A tall, lazy flame with dark orange tips requires more air – Open slider (pull out) slightly.
- A short, brisk flame, like a blowtorch, has too much air – Close slider (push in) slightly.
- If the flame is in the middle of these two characteristics with a bright yellow/orange, active flame with no black tips then the air is set for proper operation.



Figure 28: Efficient Flame.

SPECIAL NOTES:

Pellet quality is a major factor in how the Pellet stove will operate. If the pellets have a high moisture content or ash content the fire will be less efficient and has a higher possibility of the fire building up and creating clinkers (hard ash build-up).

Taking a reading of vacuum pressure inside the firebox with a magnehelic gauge can be used to set the slider for best combustion. **The best settings are a reading of approximately 0.10 inches of water column on the high fire setting. Some fuels may require higher or lower settings.** The reading can be taken from the ⅛" (3 mm) hole located on the front of the unit below the door and behind the magnetic ash lip.

Troubleshooting

DO NOT:

- Service the stove with wet hands. The stove is an electrical appliance, which may pose a shock hazard if handled improperly. Only qualified technicians should deal with possible internal electrical failures.
- Do not remove from the firebox any screws without penetrating oil lubrication.

WHAT TO DO IF:

1. The stove will not start.
2. The stove will not operate when hot.
3. The exhaust blower will not function normally.
4. Light # 2 on Heat output bar flashing.
5. Auger light flashes but auger motor does not turn at all
6. The 200 °F (93 °C) high limit temperature sensor has tripped.
7. The convection blower will not function normally.
8. Ignitor- the pellets will not light.
9. Control settings (Heat Level) has no effect on the fire.
10. The stove keeps going out.

***NOTE: All troubleshooting procedures should be carried out by qualified technicians or installers.**

1. The stove will not start.

✓Make sure the stove is plugged in and the wall outlet is supplying power..

✓If the Control Board has been placed in the ON /OFF thermostat mode, then turn the thermostat up to call for heat.

✓Ensure the burn pot liner is correctly placed in the burn pot

✓Check the Heat Level Indicator. - If the # 2 light is flashing (see the # 2 light is flashing)

✓Check the fuse on the circuit board.

✓If the unit still does not start, contact your local service dealer for service.

2. The stove will not operate when hot.

✓Check the Heat Level Indicator if a fire is not detected, or if the fire has gone out **the #3 light will flash** because the Exhaust Temperature Sensor's contacts have opened.

✓Check the hopper for fuel.

✓Incorrect air damper setting. - Excessive air may consume the fire too quickly before the next drop of fuel, leaving completely unburned fuel in the burn pot liner. - Insufficient air will cause build up, further restricting the air flow through the Burn Pot Liner. This in turn will cause the fuel to burn cold and very slowly. Fuel may build up and smother the fire. In this case clean the burn pot. **(NOTE: unit may require a change to the vent system or installation of fresh air to correct Air to Fuel ratio problems).**

✓Combustion Blower failure. - The Combustion Blower is not turning fast enough to generate the proper vacuum in the fire box. Visual Check – is the blower motor turning.

✓Check the Exhaust Blower voltage across the blower wires (>=114 V on #5 setting and >= 82 on #1 setting). – Replace the Circuit Board if the Voltage reading is less than 82 V. with a line voltage >115 V AC.

✓Check Vacuum levels in the exhaust channel by bypassing the Vacuum Switch, then remove the Vacuum hose from Vacuum Switch. Check exhaust vacuum readings by placing the open end of the Vacuum Hose on a Magnahelic Gauge (readings must be above .10" W.C. on low fire).

If the motor fails to reach a 0.10" W.C. readings, then replace the Combustion Blower.

✓Poor Quality Fuel – Insufficient energy in the fuel to produce enough heat to keep the stove burning or operational.

✓Exhaust Temperature Sensor failure. – Bypass sensor located on Exhaust Blower if stove now operates properly, the unit may require cleaning or a new sensor. Contact your local dealer for service.

✓Check the fuse on the circuit board.

3. The exhaust motor will not function normally.

✓Open the left side access panel; check all connections against the wiring diagram.

✓See "2. The stove will not operate when hot." section.

4. Light # 2 on Heat output bar flashing

(The Vacuum Switch contacts have opened for more than 15 sec.)

✓Pinch, break or blockage in Vacuum Hose - Check hose for pinch points or damage, replace or re-route as required. Blow out Vacuum Hose

✓Blocked Hose Barb on Exhaust Channel - Use a paper clip to clean out Hose Barb or remove the Vacuum Hose from the Vacuum Switch and blow into the hose to remove blockage.

✓Blocked exhaust / venting system - Have stove and venting cleaned and inspected.

✓Severe negative pressure in area where unit is installed - Check the operation by opening a window, does this solve the problem? If it does, install fresh air intake to unit or room. Venting system may require vertical section to move termination into a low pressure zone.

✓Vacuum Switch failure - Bypass the vacuum switch, if this corrects the problem check for above problems before replacing the Vacuum Switch.

✓Damage to gray wires between Circuit Board and Vacuum Switch - Inspect wires and connectors

✓Combustion Blower failure - The Combustion Blower is not turning fast enough to generate the proper vacuum in the Exhaust Channel. Visual Check; is the blower motor turning? Check the Exhaust Blower voltage across the blower wires (>=114 V on #5 setting and >= 82 V on #1 setting). – Replace the Circuit Board if the Voltage reading is less than 82 V. with a line voltage >114 V AC.

✓Check Vacuum levels in the exhaust channel by bypassing the vacuum switch, then remove the Vacuum hose from Vacuum Switch. Check exhaust vacuum readings by placing the open end of the Vacuum Hose on a Magnahelic Gauge. (readings must be above .10" W.C. on low fire).

If the motor fails to reach a 0.10" W.C. readings, then replace the Combustion Blower

To reset Circuit Board after a trouble code - push the ON/OFF button

5. Auger light flashes but auger motor does not turn at all.

✓If the Auger gear box does not turn but the motor's armature does try to spin then the auger is jammed. – Try to break apart jam by poking at the jam through the drop tube. If this fails then empty the hopper and remove the Auger Cover **Remember to re-seal the cover after installation**

✓Check the fuse on the circuit board.

6. The 200 °F (93 °C) high limit temperature sensor has tripped.

✓Reset sensor and determine cause – was it Convection Blower failure or 160 °F (71 °C) Temperature Sensor failure? Bypass the 160 °F (71 °C) sensor, does the Convection blower come on high if not replace the blower? If yes, replace sensor (located on the left side of the firewall).

✓Check the fuse on the circuit board.

7. The convection blower will not function normally.

✓Clean all grill openings at the back and below unit .

✓Press the fan button; does the fan come on? Press again to verify that the blower turns on; if, not contact your local dealer for service.

8. Ignitor- the pellets will not light.

✓Everything else in the stove operates but the ignitor will not light the pellets.

✓Make sure the burn pot liner is up tight and square to the ignitor tube by pushing the burn pot back against the ignitor tube.

✓Check to see if the exhaust blower is operating. If not, contact your local dealer for service.

✓Check the fuse on the circuit board.

NOTE: The ignitor should be bright orange in color. If not replace the ignitor.

9. Control settings (Heat Level) has no effect on the fire.

✓NOTE: If the system light is flashing the Control Board has complete control of the unit. When the units system light becomes solid then control of the unit is given back to the operator.

✓If there is no control of the Heat Level button make sure the thermostat is calling for heat.

✓Call your local dealer for service.

10. The stove keeps going out.

If the stove goes out and leaves fresh unburned pellets or cigarette-like ashes in the burn pot liner, the fire is going out before the stove shuts off.

✓Check to see that the Slider / Damper is in the correct position.

✓Turn the Heat Level up slightly (poor quality pellets will require slightly higher settings).

✓Set the auger trim till the #1 and #5 lights are illuminated.

If the stove goes out and there are partially burned pellets left in the burn pot liner, the stove has shut down due to a lack of air, exhaust temperature, or power failure.

✓Adjust the Slider / Damper.

✓Check to see if the stove needs a more complete cleaning.

✓Turn the Heat Level up slightly (poor quality pellets will require slightly higher settings).

✓Did the power go out?

✓Contact your local Dealer for service.

Wiring Diagram

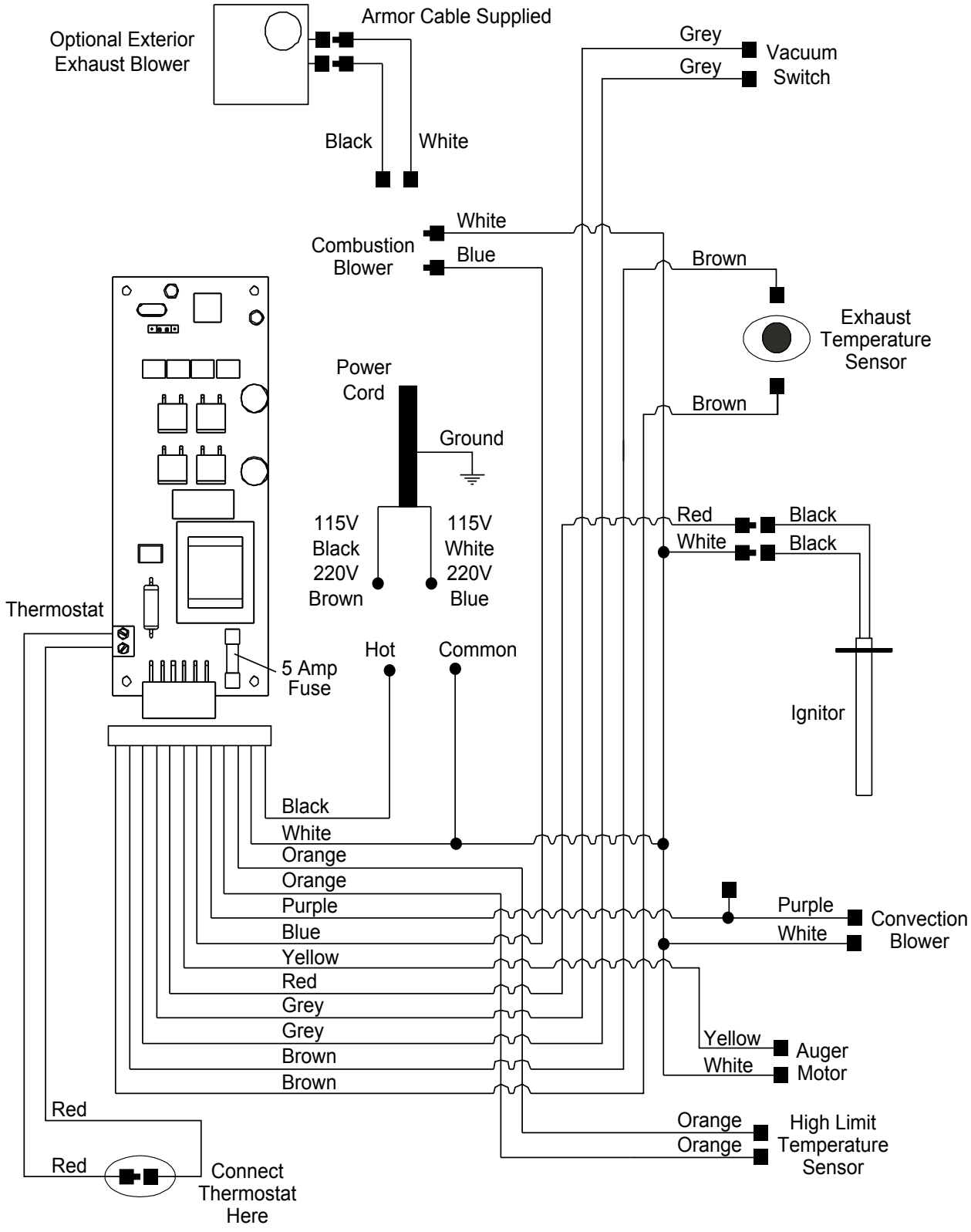

Parts List

Reference Number	Description	Part Number
1	120°F (49°C) Ceramic Fan Temperature Sensor	EC-001
	Fan Controller Knob	EC-040
	Domestic Power Cord - 115V	EC-042
2	Auger Motor - 115V	EF-001
3	High Limit Temp Sensor 200°F (93°C) Manual Reset	EF-016
4	Vacuum Switch - 115V	EF-017
	Silicone Hose	EF-018
	Aluminum Hose Barb	EF-019
	Fan Controller with Knob - 115V	EF-045
	Shoulder Bolt, Hardened Bush & Nut (Set of 2)	EF-124
5	Ash Pan Latch	EF-178
	Pedestal & Ash Pan Gasket - 10’ (305 cm)	EF-208
	Both Side Panels With Hopper Lid - Stainless Steel	EF5-101
6	Hearth Pad	EF5-103
7	Firebox Panel Set With Insulation - Round Drop Tube	EF5-124
7	Firebox Panel Set with Insulation - Square Drop Tube	50-1474
8	Burn Pot	EF5-128
9	Ash Pan	EF5-129
10	Ash Pan Cover	EF5-131
11	Ash Shelf - Nickel	EF5-132
12	Glass Retainer Set	EF5-133
13	Door Handle	EF5-134
14	Door Hinge Bracket	EF5-135
15	Door Only - Painted	EF5-136
16	Slider Damper Plate	EF5-137
17	Heat Exchange Rod	EF5-138
18	Back Grill	EF5-139
19	Hopper Lid - Painted	EF5-140
19	Hopper Lid - Stainless Steel	EF5-141
20	Hopper Lid Hinge	EF5-142
21	External Exhaust Back	EF5-143
	External Exhaust Box	EF5-144
22	External Exhaust Bottom	EF5-145
23	45° Exhaust Adaptor	EF5-146
24	Exhaust Starter Tube 3” x 2½” Long	EF5-147
25	Door Assembly Complete	20-014
26	Levelling Legs (Set of 4)	20-018
	Hardened Bushing	20-020
27	Glass With Gasket (356 mm x356 mm)	20-023

Parts List

Reference Number	Description	Part Number
	Thermostat Interface	20-026
28	Cabinet Side Left - Stainless Steel	20-029
28	Cabinet Side Left - Painted	20-031
29	Cabinet Side Right - Stainless Steel	20-030
29	Cabinet Side Right - Painted	20-032
	Cast Top	20-038
30	Control Panel Door	20-040
30	Control Panel Door - Stainless Steel	50-684
31	Firebox Brick Liner - Round Drop Tube	20-045
31	Steel Brick Panel - Square Drop Tube	50-1411
32	Stainless Steel Burn Pot Liner	20-054
33	External Exhaust Kit (3” pipe)	20-070
	Nickel Upgrade Kit	20-073
	Door Gasket (7ft)	50-088
	60° Exterior Exhaust Adaptor	50-096
34	Top Louver Set - Nickel	50-097
	Ash Shelf Louver	50-162
	Slider Damper Rod & Knob	50-293
	Top Glass Retainer	50-294
	Control Panel Touch Latch	50-323
	Circuit Board Stand Offs	50-331
	Circuit Board Wire Harness	50-332
	Hopper Guard	50-333
35	Convection Blower - 115V (No Mount)	50-512
36	Convection Blower Mount & Hardware	50-585
37	400 Watt Ignitor - 115V	50-619
	Auger Mounting Hardware	50-689
	Auger Plate with Bushing	50-899
38	Exhaust Blower Assembly - 115V	50-901
	Auger Motor Mount	50-910
	Domestic Owner’s Manual	50-1021
	Domestic Technical Manual	50-1483
39	Auger with paddles	50-1085
	Top Bushing & Auger Kit	50-1223
	Burnpot Scrapper Tool	50-1254
	End Cap with ½” Bushing	50-1255
	Auger for 50-1223 Kit	50-1256
40	Circuit Board Decal	50-1930
40	Circuit Board Control Panel with Decal	50-1931
41	Circuit Board With Thermosat Switch - 115V	50-1929
41	Circuit Board 5 Amp Fuse - 115V (Pair)	50-833

Parts Diagram - Components

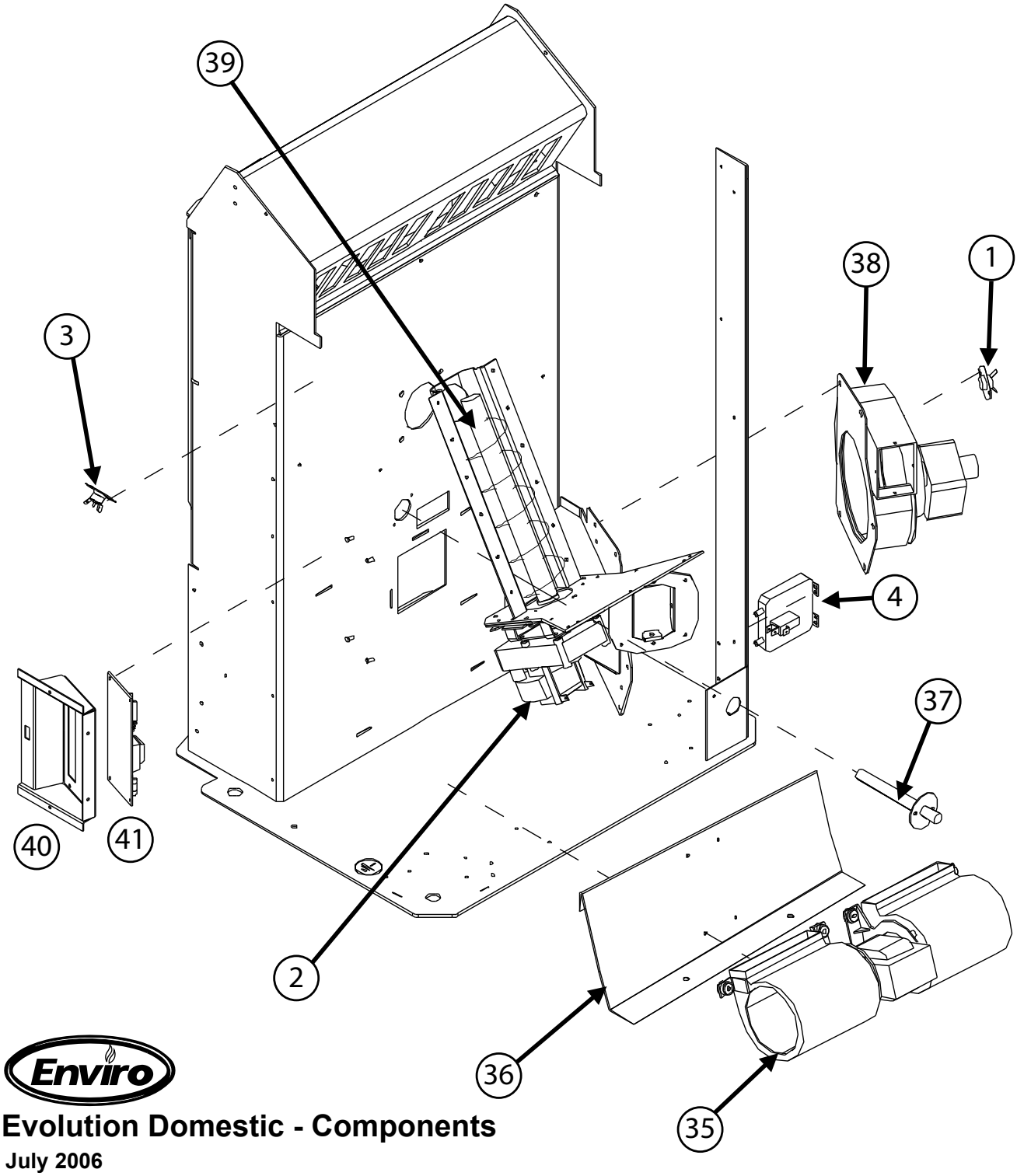

Evolution Domestic - Components

July 2006

Parts Diagram - Steel

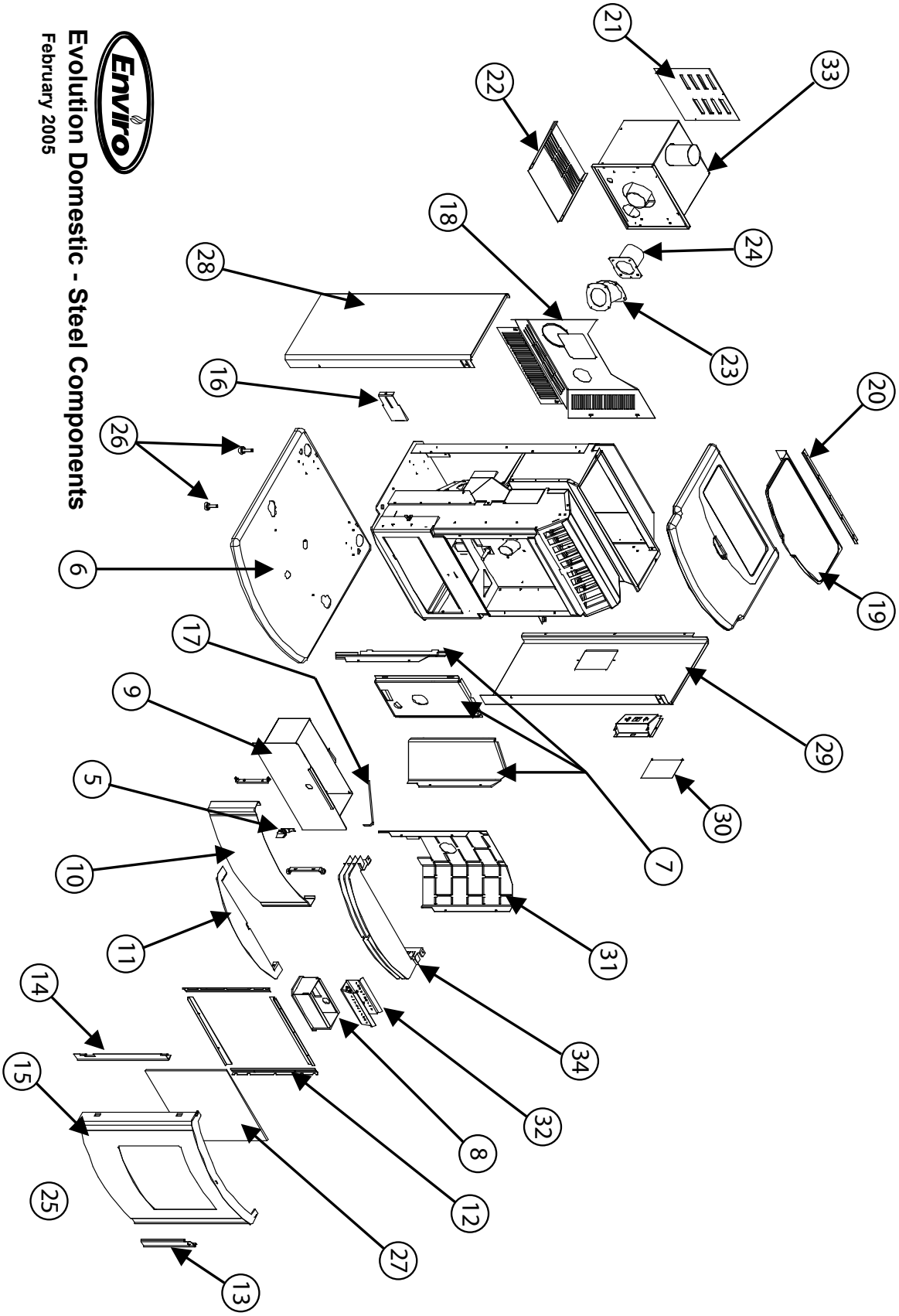

Warranty

Sherwood Industries Ltd. is the manufacturer of the Enviro line of heating products. At Sherwood Industries, our commitment to the highest level of quality and customer service is the most important thing we do. Each Enviro stove is built on a tradition of using only the finest materials and is backed by our Exclusive Lifetime Limited Warranty to the original purchaser. With Enviro, you're not just buying a stove, you're buying a company with years of unequalled performance and quality.

Limited Lifetime Warranty:
Under this warranty, Sherwood Industries Ltd. covers the fireplace or stove body and accessories against defects in materials and workmanship, for part repair or replacement for the first seven (7) years and limited labour for the first two (2) years to the original purchaser. This Warranty covers: Firebox, Heat Exchanger, Burn Pot, Firebox Panels, Ceramic Glass, Pedestals, Panels, Legs, and Door Assembly. Please see the exclusions and limitation section below as certain restrictions and exclusions apply to this warranty.

Limited Three (3) Year Warranty
Under this warranty, Sherwood Industries Ltd. covers the Burn Pot Liner and Log Sets against defects in materials and workmanship, for part repair or replacement for the first three (3) years and limited labour for the first two (2) years to the original purchaser. Please see the exclusions and limitation section below as certain restrictions and exclusions apply to this warranty.

Limited Two (2) Year Warranty:
Under this warranty, Sherwood Industries Ltd. covers: Ignitor, Auger Motor, Circuit Board, Timers, Temp Sensors, Blowers, Vacuum Switch and Wire Harness, against defects in materials and workmanship, for part repair or replacement for the first two (2) years and limited labour for the first two (2) years to the original purchaser. Please see the exclusions and limitation section below as certain restrictions and exclusions apply to this warranty.

Limited One (1) Year Warranty:
Under this warranty, Sherwood Industries Ltd. covers all exterior surface finishes against defects in materials and workmanship, for part repair or replacement and limited labour for the first (1) year to the original purchaser. Please see the exclusions and limitation section below as certain restrictions and exclusions apply to this warranty.

Here is how our Warranty works
If you have any concerns with your Enviro product please contact the dealer where you purchased the fireplace or stove. Your dealer shall make all claims under this warranty in writing.

To the Dealer
When filling out a warranty claim please complete the following information on an official warranty claim form:

Customer information: Name, address and telephone number of purchaser and date of purchase.

Dealer information: Date of installation, name of installer and dealer, serial number of the appliance, nature of complaint, defects or malfunction, description and part numbers of any parts replaced.

To the Distributor
Sign and verify that work and information are correct.

Warranty

Exclusions and Limitations:

1. This Warranty does not cover tarnish, discoloration or wear on the plating or paint.
2. This Warranty excludes wear and tear or breakage caused by cleaning, moving or service on log set.
3. A qualified installer must install this stove or fireplace. This Limited Warranty covers defects in materials and workmanship only if the product has been installed in accordance with local building and fire codes; in their absence, refer to the owner's manual. If the product is damaged or broken as a result of any alteration, willful abuse, mishandling, accident, neglect, or misuse of the product, the Limited Warranty does not apply.
4. The stove must be operated and maintained at all times in accordance with the instructions in the Owner's Manual. If the unit shows signs of neglect or misuse, it is not covered under the terms of this Warranty policy. Performance problems due to operator error will not be covered by the Limited Warranty policy.
5. As this is a heating appliance some changes in colour of surface finishes may occur. This is not a flaw and as such is not covered under this warranty.
6. Some minor expansion, contraction, or movement of certain parts and resulting noise, is normal and not a defect and, therefore, is not covered under this Limited Warranty.
7. Misuse includes over-firing. Over-firing this appliance can cause serious damage and will nullify the Limited Warranty.
8. The Limited Warranty will cover glass thermal breakage only and will not cover misuse of the stove glass, including but not limited to glass that is struck, has surface contaminates or has had harsh or abrasive cleaners used on it.
9. This warranty does not cover products made or provided by other manufacturers and used in conjunction with the operation of this stove without prior authorization from Sherwood Industries Ltd. The use of such products may nullify the Limited Warranty on this stove. If unsure as to the extent of this Limited Warranty, contact your authorized Enviro dealer before installation.
10. Sherwood Industries Ltd. will not be responsible for inadequate performance caused by environmental conditions.
11. The Limited Warranty does not cover installation and operational related problems such as spillage caused by environmental conditions. Environmental conditions include but are not limited to nearby trees, buildings, roof tops, wind, hills, mountains, inadequate venting or ventilation, excessive offsets, negative air pressures or other influences caused by mechanical systems such as furnaces, fans, clothes dryers etc.
12. The Limited Warranty is void if:
    a) The stove has been operated in atmospheres contaminated by chlorine, fluorine or other damaging chemicals.
    b) The stove is subject to submersion in water or prolonged periods of dampness or condensation.
    c) Any damage to the unit, combustion chamber or other components due to water, or weather damage which is the result of, but not limited to, improper chimney/venting installation.
    c) Salt air in coastal areas or high humidity can be corrosive to the finish; these environments can cause rusting. Damage caused by salt air or high humidity is not covered by the Limited Warranty.
13. Exclusions to the Limited Warranty include: injury, loss of use, damage, failure to function due to accident, negligence, misuse, improper installation, alteration or adjustment of the manufacturer's settings of components, lack of proper and regular maintenance, alteration, or act of God.
14. The Limited Warranty does not cover damage caused to the fireplace or stove while in transit. If this occurs, do not operate the stove and contact your courier and/or dealer.
15. The Limited Warranty does not extend to or include firebox paint, door or glass gaskets with damage caused by normal wear and tear, or exterior paint discoloration or chipping, worn gaskets, etc.
16. The Limited Warranty does not include damage to the unit caused by abuse, improper installation, or modification of the unit.

17. Damage to plated surfaces caused by fingerprints, scratches, melted items, or other external scores and residues left on the plated surfaces from the use of abrasive cleaners or polishes is not covered in this warranty.
18. The Limited Warranty does not cover tarnish, discoloration or wear on the plated surfaces.
19. The paint on the Metal Brick Liner may peel. This is due to the extreme conditions applied to the paint during normal usage. It is not a flaw and is not covered under warranty.
20. Sherwood Industries Ltd. is free of liability for any damages caused by the fireplace or stove, as well as inconvenience expenses and materials. The Limited Warranty does not cover incidental or consequential damages.
21. The Limited Warranty does not cover any loss or damage incurred by the use or removal of any component or apparatus to or from the Enviro fireplace or stove without the express written permission of Sherwood Industries Ltd. and bearing a Sherwood Industries Ltd. label of approval.
22. Any statement or representation of Enviro products and their performance contained in Enviro advertising, packaging literature, or printed material is not part of the Limited Warranty.
23. The Limited Warranty is automatically voided if the fireplace or stove's serial number has been removed or altered in any way. If the stove is used for commercial purposes, it is excluded from the Limited Warranty.
24. No dealer, distributor, or similar person has the authority to represent or warrant Enviro products beyond the terms contained within the Limited Warranty. Sherwood Industries Ltd. assumes no liability for such warranties or representations.
25. Sherwood Industries Ltd. will not cover the cost of the removal or re-installation of the stove, hearth, facing, mantels, venting or other components.
26. Labour to replace or repair items under this Limited Warranty will be covered per our warranty service fee reimbursement schedule. Labour rates are set per component and as such total labour costs may not be covered.
27. Sherwood Industries Ltd. is not liable for freight or labour on any stove replaced in-field and is not liable for travel costs for service work. In the event of in-home repair work, the customer will pay any in-home travel fees or service charges required by the Authorized Dealer.
28. At no time will Sherwood Industries Ltd. be liable for any consequential damages which exceed the purchase price of the unit. Sherwood Industries Ltd. has no obligation to enhance or modify any stove once manufactured (example: as a stove evolves, field modifications or upgrades will not be performed).
29. This Limited Warranty is applicable only to the original purchaser and it is non-transferable.
30. This warranty only covers Enviro products that are purchased through an authorized Enviro dealer.
31. If for any reason any section of the Limited Warranty is declared invalid, the balance of the warranty remains in effect and all other clauses shall remain in effect.
32. The Limited Warranty is the only warranty supplied by Sherwood Industries Ltd., the manufacturer of the stove. All other warranties, whether express or implied, are hereby expressly disclaimed and purchaser's recourse is expressly limited to the Limited Warranty.
33. Sherwood Industries Ltd. and its employees or representatives will not assume any damages, either directly or indirectly, caused by improper usage, operation, installation, servicing or maintenance of this stove.
34. Sherwood Industries Ltd. reserves the right to make changes without notice. Please complete and mail the warranty registration card and have the installer fill in the installation data sheet in the back of the manual for warranty and future reference.
35. Sherwood Industries Ltd. is responsible for stocking parts for a maximum of seven (7) years after discontinuing the manufacture or incorporation of the item into its products. An exception to this would be if an OEM supplier is not able to supply a part.

Installation Data Sheet

The following information must be recorded by the installer for warranty purposes and future reference.

NAME OF OWNER:

_____

ADDRESS:

_____

_____

_____

PHONE:_____

NAME OF DEALER:

_____

ADDRESS:

_____

_____

_____

PHONE:_____

MODEL:_____

SERIAL NUMBER:_____

DATE OF PURCHASE: _____ (dd/mm/yyyy)

DATE OF INSTALLATION:_____(dd/mm/yyyy)

MAGNEHELIC AT INSTALL:_____

INSTALLER'S SIGNATURE:

_____

NAME OF INSTALLER:

_____

ADDRESS:

_____

_____

_____

PHONE:_____

MANUFACTURED BY:
SHERWOOD INDUSTRIES LTD.
6782 OLDFIELD RD. SAANICHTON, BC, CANADA V8M 2A3
www.enviro.com
March 1, 2010
C-12149