WARRANTY REGISTRATION
enviro.com/warranty

Enviro®

E33G

Gas Insert - Glass Burner with Nova Valve

OWNER'S MANUAL



Listed By O-T-L Portland Oregon USA
C US
OMNI-Test Laboratories, Inc.
Report # 268-S-22-5

WARNING: If the information in this manual is not followed exactly, a fire or explosion may result causing property damage, personal injury or loss of life. Installation and service must be performed by a qualified installer, service agency or the gas supplier.

Fr Version Française: www.enviro.com/fr.html

50-2562

Safety Precautions

WARNING:

FIRE OR EXPLOSION HAZARD

Failure to follow safety warnings exactly could result in serious injury, death, or property damage.

- Do not store or use gasoline or other flammable vapors and liquids in the vicinity of this or any other appliance.

- WHAT TO DO IF YOU SMELL GAS

- **Do not try to light any appliance.**
- **Do not touch any electrical switch; do not use any phone in your building.**
- **Leave the building immeadiately.**
- **Immeadiately call your gas supplier from a neighbor's phone. Follow the gas supplier's instructions.**
- **If you cannot reach your gas supplier, call the fire department.**

- Installation and service must be performed by a qualified installer, service agency or the gas supplier.

INSTALLER:
Leave this manual with the appliance.

CONSUMER:
Retain this manual for future reference.

This appliance may be installed in an after-market permanently located, manufactured (mobile) home, where not prohibited by local codes.

This appliance is only for use with the type of gas indicated on the rating plate. This appliance is not convertible for use with other gases, unless a certified kit is used.

Massachusetts installations (Warning): This product must be installed by a licensed plumber or gas fitter when installed within the Commonwealth of Massachusetts. Other Massachusetts code requirements: Flexible connector must not be longer than 36in., a shut off valve must be installed; only direct vent sealed combustion products are approved for bedrooms/bathrooms. A carbon monoxide detector is required in all rooms containing gas fired direct vent appliances. The fireplace damper must be removed or welded in the open position prior to installation of a fireplace insert.

Safety Precautions

FOR SAFE INSTALLATION AND OPERATION OF YOUR "ENVIRO" HEATER, PLEASE CAREFULLY READ THE FOLLOWING INFORMATION:

• All ENVIRO gas-fired appliances must be installed in accordance with their instructions. Carefully read all the instructions in this manual first. Consult the building authority having jurisdiction to determine the need for a permit prior to commencing the installation.

• **NOTE:** Failure to follow these instructions could cause a malfunction of the fireplace, which could result in death, serious bodily injury, and/or property damage.

• Failure to follow these instructions may also void your fire insurance and/or warranty.

GENERAL

• Installation and repair should be done by a qualified service person. The appliance should be inspected before the first use and, at least, annually by a qualified service person. More frequent cleaning may be required due to excessive lint from carpeting, bedding material, etc. It is imperative the control compartments, burners and circulating air passageways of the appliance be kept clean.

• Due to high temperatures, the appliance should be located out of high traffic areas and away from furniture and draperies.

Children and adults should be alerted to the hazards of high surface temperatures and should stay away to avoid burn or clothing ignition.

• Young children should be carefully supervised when in the same room as the appliance. Toddlers, young children and others may be susceptible to accidental contact burns. A physical barrier is recommended if there are at risk individuals in the house. To restrict access to a fireplace or stove install an adjustable safety gate to keep toddlers, young children and other at risk individuals out of the room and away from hot surfaces. Any safety screen, guard, or barrier removed for servicing an appliance must be replaced prior to operating the appliance.

• Clothing or other flammable materials should not be placed on or near the appliance.

DANGER



HOT GLASS WILL CAUSE BURNS

DO NOT TOUCH GLASS UNTIL COOLED.

NEVER ALLOW CHILDREN TO TOUCH GLASS.

A barrier designed to reduce the risk of burns from the hot viewing glass is provided with this appliance and shall be installed for the protection of children and other at-risk individuals.

• A barrier designed to reduce the risk of burns from the hot veiwing glass is provided with this appliance and shall be installed for the protection of children and other at-risk individuals. If the barrier becomes damaged, the barrier shall be replaced with the manufacturer's barrier for this appliance

FOR YOUR SAFETY

• Installation and service must be performed by a qualified installer, service agency or gas supplier.

• This installation must conform to local codes or, in the absence of local codes, with the National Fuel Gas Code, ANSI Z223.1/NFPA 54, or the Natural Gas and Propane Installation Code, CSA B149.1.

• To prevent injury, do not allow anyone who is unfamiliar with the stove to operate it.

• To prevent injury, if the pilot or pilot and burners have gone out on their own, open the glass door and wait 5 minutes to air out before attempting to re-light the stove.

• Always keep the area around these appliances clear of combustible material, gasoline and other flammable liquids and vapours.

• These appliances should not be used as a drying rack for clothing or for hanging Christmas stockings/decorations.

• Due to the paint curing on the stove, a faint odor and slight smoking will likely be noticed when the stove is first used. Open a window until the smoking stops.

Always connect this gas stove to a vent system and vent to the outside of the building envelope. Never vent to another room or inside the building. Make sure the specified vent pipe is used, properly sized and of adequate height to provide sufficient draft. Inspect the venting system annually for blockage and signs of deterioration.

WARNING: Failure to position the parts in accordance with the diagrams in this booklet, or failure to use only parts specifically approved with this appliance, may result in property damage or personal injury.

WARNING: Do not operate with the glass front removed, cracked or broken. Replacement of the glass should be done by a licensed or qualified service person.

• Never use solid fuels such as wood, paper, cardboard, coal, or any flammable liquids, etc., in this appliance.

• Do not use this appliance if any part has been under water. Immediately call a qualified service technician to inspect the appliance and to replace any part of the control system or any gas control which has been under water.

• Do not abuse the glass by striking it or slamming the door shut.

• If the E33 unit is pulled out of its installation, and the vent-air intake system is disconnected for any reason, ensure that the vent-air intake pipes are reconnected and re-sealed in accordance to the instructions noted in Initial Installation - Venting Fireplace INserts.

Table of Contents

Safety Precautions....2
Table of Contents....4
Codes And Approvals....5
Specifications....6
- Rating Label Location....6
- Dimensions....6
- Install Depths....6
- E33G Options Dimensions....7

Operating Instructions....8
- Lighting and Turning Off Instructions....8
- Pilot Light....9
- Venturi Adjustment....9
- Normal Sounds During Operation....9
- Burner Lighting....10
- Blower Speed....10

Maintenance And Service....11
- Cleaning The Glass....11
- Cleaning The Firebox....11
- Replacing The Glass....11
- Check Pilot and Burner Flames....11
- Glass Door Removal....12
- Cleaning The Painted Surfaces....12
- Removing Valve Cover....13
- Fuel Conversion....14

Initial Installation....16
- Clearances to Combustibles....16
- Minimum Fireplace Size....16
- Direct Vent Model....16
- Venting Fireplace Inserts....17
- Direct Vent Vertical Vent Termination....19
- Installing the Unit....20
- Zero Clearance Fireplace Installation....21
- Electrical Requirements....22
- Gas Line Connection....23
- Adjusting The Pilot Flame....25

Secondary Installation....26
- Optional Base Shelf & Riser....26
- Surround Panel Screw Installation....27
- Optional 3 and 4 sided Trimmable Panels....28
- Surround Panel Installation....29
- Safety Screen Installation....30
- Firebox Liner and Burner Tube Removal / Installation....31
- Installing the Glass Burner Media....32

Trouble Shooting....33
Parts List....34
Parts Diagram - Components....36
Parts Diagram - Options....37
Notes....38
Warranty....39
Installation Data Sheet....40

Codes And Approvals

DIRECT VENT: This type is identified by the suffix DV. This appliance draws all of its air for combustion from outside the dwelling, through a specially designed vent pipe system.

This appliance has been tested and approved for installations from 0 feet to 4500 feet (1372 m) above sea level.

In the USA: The appliance may be installed at higher altitudes. Please refer to your American Gas Association guidelines which state: the sea level rated input of Gas Designed Appliances installed at elevations above 2000 (610 m) feet is to be reduced 4% for each 1000 feet (305 m) above sea level. Refer also to local authorities or codes which have jurisdiction in your area regarding the de-rate guidelines.

In Canada: When the appliance is installed at elevations above 4500 feet (1372 m), the certified high altitude rating shall be reduced at the rate of 4% for each additional 1000 feet (305 m).

- This appliance has been tested by OMNI-Test Laboratories and found to comply with the established VENTED GAS FIREPLACE HEATER standards in CANADA and the USA as follows:

DIRECT VENTED GAS FIREPLACE INSERT HEATER

TESTED AND LISTED TO: ANSI Z21.88-2014/CSA 2.33-2014 VENTED GAS FIREPLACE HEATERS

CAN/CGA 2.17-M91 (R2009) GAS FIRED APPLIANCES FOR HIGH ALTITUDES BY OMNI-TEST LABORATORIES

CSA P.4.1-2009 (R2014) TESTING METHOD FOR MEASURING ANNUAL FIREPLACE EFFICIENCY

This ENVIRO E33G Fireplace Insert:

- Has been certified for use with either natural or propane gases. (See rating label.)
- Is not for use with solid fuels.
- Is approved for bedroom or bed sitting room. (**IN CANADA**: must be installed with a permanent wall thermostat for bedroom installations. Consult the authority having local jurisdiction in your area. **IN USA**: see current ANSI Z223.1 for installation instructions.)
- Must be installed in accordance with local codes. If none exist, use current installation code CAN/CGA B149 in Canada or ANSI Z223.1/NFPA 54 in the USA.
- Must be properly connected to an approved venting system and not connected to a chimney flue serving a separate solid-fuel burning appliance.
- Is not approved for closet or recessed installations.

IMPORTANT NOTICE (Regarding first fire up): When the unit is turned on for the first time, it should be turned onto high without the fan on for the first 4 hours. This will cure the paint, gasket material and other products used in the manufacturing process. It is advisable to open a window or door, as the unit will start to smoke and can irritate some people. After the unit has gone through the first burn, turn the unit off, let the unit get cold then remove the glass door and clean it with a good gas fireplace glass cleaner, available at your local ENVIRO dealer. See "Door Removal" and "Cleaning The Glass" sections.

COLD CLIMATES:

NOTE: In cold climates, additional insulation may be used on some venting. It is recommended in cold climates to wrap the exhaust and intake venting for the final few feet before termination.

NATIONAL FIREPLACE INSTITUTE®

NFI

CERTIFIED

www.nficertified.org

We recommend that our gas hearth products be installed and serviced by professionals who are certified in the U.S. by the National Fireplace Institute® (NFI) as NFI Gas Specialists.

Specifications

Rating Label Location:

The rating label is located on the left side of the unit, next to the fan controller.

Dimensions:

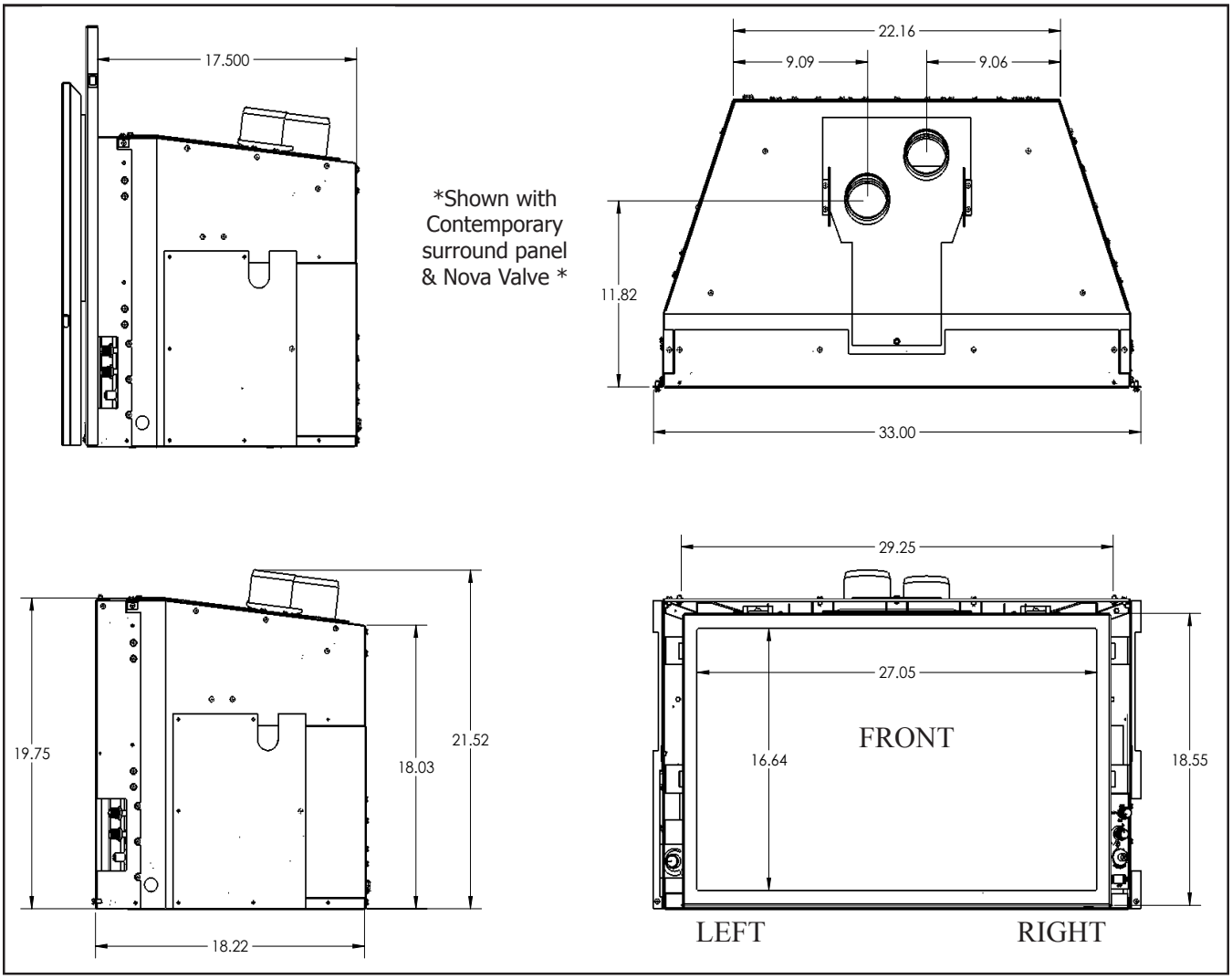

Figure 1: E33 Exterior Dimensions.

Install Depth:

E33 Nova Valve units have a minimum install depth of 17.5". The table below shows what depth of install it will need with each surround panel.

Surround Panel	Install Depth
Contemporary	17.50"
Modern	17.50"
Extruded	17.50"
Extruded Plus	18.00"
Borderview	19.00"
Borderview Plus	19.00"
Modern Plus	19.00"

Table 1: Install Depths

Specifications

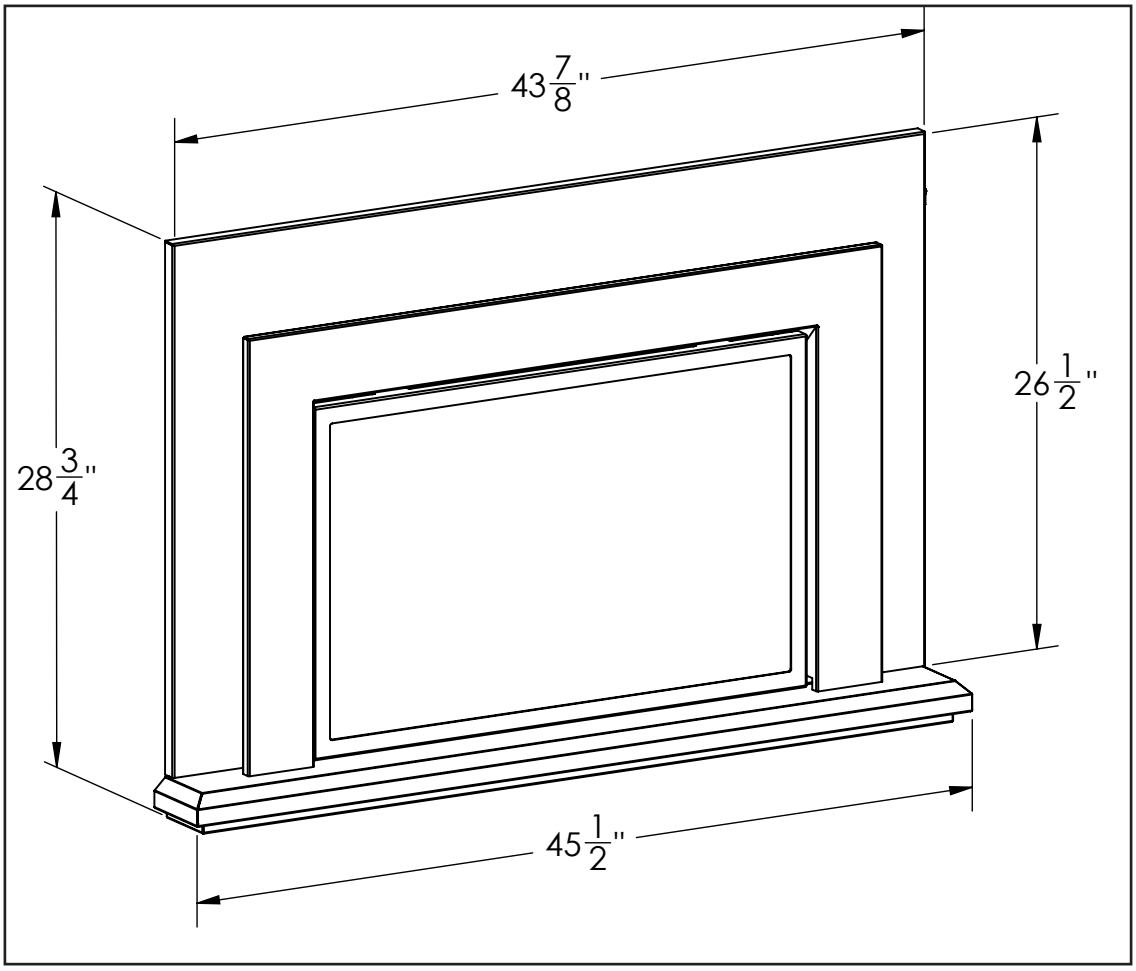

Figure 2: E33G Contemporary Surround with Base Shelf and Riser.

Table 2: E33G Options Dimensions.

	Regular Surround	Contemporary Surround	Extruded Surround
Height	26.5″ (673 mm)	26.5″ (673 mm)	26.5″ (673 mm)
Width	44 1/8″ (1121 mm)	44 1/8″ (1121 mm)	44 1/8″ (1121 mm)
Trimmable Surround	Height		Width
	38″ (965mm)		46″ (1168mm)
	Base Shelf		**Base Shelf Riser**
Height	1 5/8″ (41 mm)		2 1/8″ (54 mm)
Width	45 1/2″ (1156 mm)		44″ (1118 mm)
Depth	Bottom 4 7/8″ (112 mm); Top 3 13/16″ (97 mm)		3 11/16″ (94 mm)

Operating Instructions

For Your Safety, Read Safety Precautions And Lighting Instructions Before Operating

WARNING: IF YOU DO NOT FOLLOW THESE INSTRUCTIONS EXACTLY A FIRE OR EXPLOSION MAY RESULT, CAUSING PROPERTY DAMAGE, PERSONAL INJURY OR LOSS OF LIFE.

Lighting and Turning Off Instructions:

FOR YOUR SAFETY READ BEFORE LIGHTING

WARNING:If you do not follow these instructions exactly, a fire or explosion may result causing property damage, personal injury or loss of life

A. This appliance has a pilot which must be lighted by hand. When lighting the pilot, follow these instructions exactly.

B. BEFORE LIGHTING smell all around the appliance area for gas. Be sure to smell next to the floor because some gas is heavier than air and will settle on the floor.

WHAT TO DO IF YOU SMELL GAS:
Do not try to light any appliance. Do not touch any electrical switch; do not use any phone in your building. Immediately call your gas supplier from a neighbor's phone. Follow the gas supplier's instructions. If you cannot reach your gas supplier, call the fire department.

C. Use only your hand to push in or turn the gas control knob. Never use tools. If the knob will not push in or turn by hand, don't try to repair it. Call a qualified service technician. Force or attempted repair may result in a fire or explosion.

D. Do not use this appliance if any part has been under water. Immediately call a qualified service technician to inspect the appliance and to replace any part of the control system and any gas control which has been under water.

LIGHTING INSTRUCTIONS

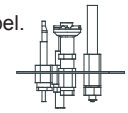

1. STOP! Read the safety information above on this label.
2. Set the thermostat to the lowest setting.
3. Turn off all electric power to this appliance.
4. Open the front control panel.
5. Turn off the gas control knob clockwise ↷ to the "OFF" position.
6. Open door. Wait flve (5) minutes to clear out any gas. Close door. Then smell for gas, including near the floor. If you smell gas, STOP! Follow "B" in the saftey information above on this label. If you don't smell gas, go to the next step.
7. Find pilot-located near the center rear of the firebox. Turn the gas control knob counter-clockwise ↶ to "PILOT". Push the gas control in fully and hold, keep knob depressed for about 30 seconds after the pilot is lit. Release knob. If pilot goes out, repeat steps 4 through 5.

WARNING: This gas valve has a lockout device, which will not allow the pilot burner to be relit until the thermocouple has cooled.
-If the knob does not pop up when released, stop and immediately call your service technician or gas supplier.
-If the pilot will not stay lit after several tries, turn the gas control knob clockwise ↷ to "OFF" and call your service technician or gas supplier.

8. Turn the gas control knob counter clockwise ↶ to the "ON" position. Flip the burner switch to "ON" then turn the "HI/LOW" knob to the desired setting.
9. Close the front control panel.
10. Turn on all electric power to the appliance.
11. Set thermostat to desired setting.

TO TURN OFF GAS TO APPLIANCE

1. Set the thermostat to the lowest setting.
2. Turn off all electric power to the appliance if service is to be performed.
3. Open the front control panel and flip burner switch to "OFF"
4. Turn the gas control knob clockwise ↷ to the "OFF" position.
5. Close the front control panel.

C-12454

Figure 3: Lighting instruction label.

Operating Instructions

Pilot Light:

1. Turn off the gas to the fireplace. **If not recently done, remove the glass and let the unit air out for at least five (5) minutes to clear out any gas.** Turn on gas to the heater. Leak test all joints with soapy water. **NEVER USE OPEN FLAME FOR LEAK TESTING.**
2. Start the pilot by pressing the gas control knob and turning it to PILOT. While holding the gas control knob in, press the piezo ignitor several times until the pilot light starts. Hold the gas control knob in for 30 seconds. Check that the pilot has fully engulfed the thermocouple assembly (see Figure 4).
3. Start the main burner by turning the gas control knob to ON and then turn the rocker switch to ON. Check that all burner ports have flame.
4. Leak test all gas joints again.

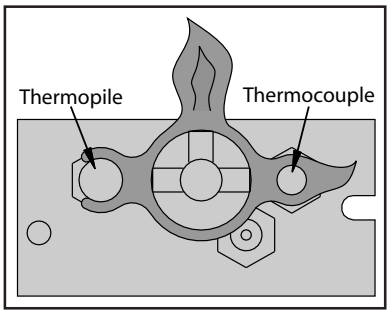

Figure 4. Pilot Flame

Venturi Adjustment:

The venturi adjustment lever is located on the right side of the unit, behind the surround panel (see Figure 5). To avoid touching hot surfaces under the unit, use the Door Tool to adjust the venturi.

The venturi allows the amount of air coming into the fireplace to be adjusted in order to accommodate different climates and venting arrangements. Start the pilot and then the burner. Make sure the pilot flame is burning normally and none of the burner ports are plugged. Let the fireplace burn for roughly fifteen (15) minutes and then examine the flames. The ideal flame will be blue at the base and light orange above. The flames should be of medium height. If the flames look like this, no venturi adjustment is needed. If the flames are fairly short and mostly blue, the fireplace is getting too much air. Therefore, the air shutter should be closed (push in) slightly until the correct flames are achieved. Flames that are very orange, with tall dark stringy tips are not getting enough air. Open (pull out) the venturi until the flames clean up. If the venturi is opened, then closed all the way, and the correct flames cannot be attained, turn off the gas and contact the dealer.

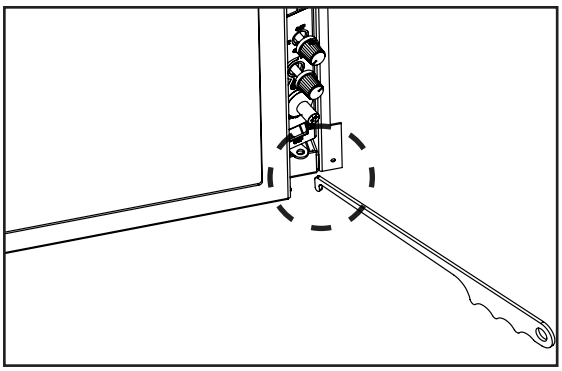

Figure 5: Adjusting the venturi air setting.

Warning: Incorrect venturi adjustment may lead to improper combustion, which is a safety hazard. Contact the dealer if there is any concern about the venturi adjustment.

Normal Sounds During Operation:

Component	Sound & Reason
Fire Box	Creaking when heating up or cooling down.
Burner	Light pop or poof when turned off; this is more common with LP units.
Temperature Sensor	Clinking when it senses to turn the blower on or off.
Pilot Flame	Quiet whisper while the pilot flame in on.
Blower / Fan	Air movement that increases and decreases with the speed of the blower.
Gas Control Valve	Dull click when turning on or off, this is the valve opening and closing.

Table 3: Normal Sounds

Operating Instructions

Burner Lighting:

A) Make sure the pilot is lit.
B) Turn gas control knob COUNTER CLOCKWISE to ON.
C) Flip the burner switch to ON (Located on the surround panel).
   - An alternate switch location is shown in Figure 6.
D) Turn HI/LO knob to the desired flame height.
E) Turn on all electrical power to the unit.

NOTE: Check that all burner holes are lit.

TO TURN GAS FIREPLACE OFF

Flip the burner switch to OFF to turn off burner only.

If the fireplace is to be turned off for the season or for servicing, turn control knob to OFF, turn the gas shut off valve to OFF. DO NOT FORCE IT. If the unit is going to be serviced, turn off the electrical power to the unit as well.

NOTE: When the unit is turned on for the first time, it should be turned to high, with the fan OFF, for the first four (4) hours. This will cure the paint, logs, gasket material, and other products used in the manufacturing process. It is advised that a door or window be opened as the unit will smoke, which can irritate some people. After the unit has gone through the first burn, turn the unit OFF, including the pilot, and let the unit completely cool. Then remove the door and clean the glass with a good gas fireplace glass cleaner, available at your local Enviro dealer. See Maintenance And Service - Cleaning The Glass and Maintenance And Service - Glass Door Removal.

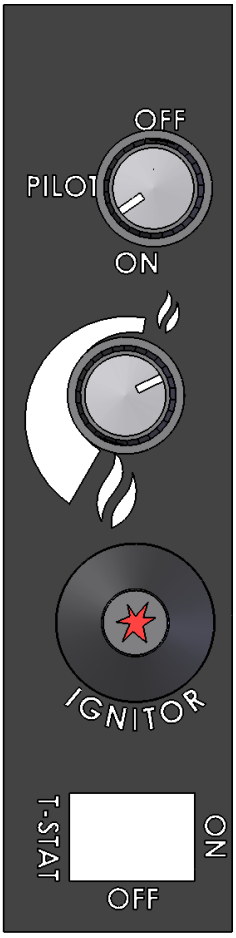

Alternate Burner Switch Location

Figure 6: E33G Control Panel.

Blower Speed:

The blower will come on only when the fireplace is up to temperature (approximately 15 minutes). Rotating the fan controller knob on the unit's control panel will change the speed of the fan (refer to Figure 6). To turn the blower off, fully rotate the fan controller knob counter-clockwise.

Maintenance And Service

Warning: Failure to position the parts in accordance with this manual, or failure to use only parts specifically approved with this appliance, may result in property damage or personal injury.

At least once a year, run through the following procedures to ensure the system is clean and working properly. Check the burner to see if all the ports are clear and clean. Check the pilot to make sure it is not blocked by anything. The pilot flame should be blue with little or no yellow on the tips.

The venting system must be periodically examined; it is recommended the examination is done by a qualified person.

Cleaning The Glass:

When the fireplace is cool, remove the glass door. See Maintenance and Service - Glass Door Removal. Check the gasket material on the back of the glass, making sure that it is attached and intact.

During a cold start up, condensation will form on the glass. This is a normal condition with all fireplaces. However, this condensation can allow dust and lint to cling to the glass surface. Initial paint curing of the appliance can leave a slight film on the glass. The glass will need cleaning after the fireplace has cooled off from the first burn and about two weeks after first burn. **Use a mild glass cleaner and a soft cloth**. **Abrasive cleaners will damage the glass and painted surfaces.** Depending on the amount of use, the glass should require cleaning no more than two or three times a season. **Do not clean the glass when it is hot.**

Cleaning The Firebox:

Remove the glass material. Vacuum the bottom of the firebox thoroughly. At this time, inspect the burner tube for cracking or severe warping. If a problem is suspected, contact the dealer.

Replacing The Glass:

The glass in the fireplace is a high temperature ceramic. If the glass is damaged in any way, a factory replacement is required (see Parts List). Wear gloves when handling damaged glass door assembly to prevent personal injury. Do not operate with the glass front removed, cracked or broken. Removal and replacement of the glass from the door **must** be done by a licensed or qualified service person. **The glass must be purchased from an ENVIRO dealer. No substitute materials are allowed.** Remove the door (see page 11). The replacement glass will come with a new gasket installed. Remove any silicone remnants from the door. Apply high temperature silicone to the two vertical faces of the door and install the new piece of glass with gasket (be sure to maintain edge clearances). Apply even pressure to the glass to allow the silicone to adhere to the gasket material.

Check Pilot and Burner Flames:

Periodically do a visual check of the pilot flames. One flame should encompass the ignitor and thermocouple and the other should burn over the burner ports (see Figure 7). Also check that the burner is operating correctly, refer to Venturi Adjustment section.

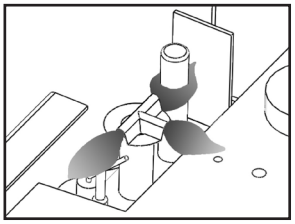

Figure 7: Pilot Flame

Maintenance And Service

Glass Door Removal:

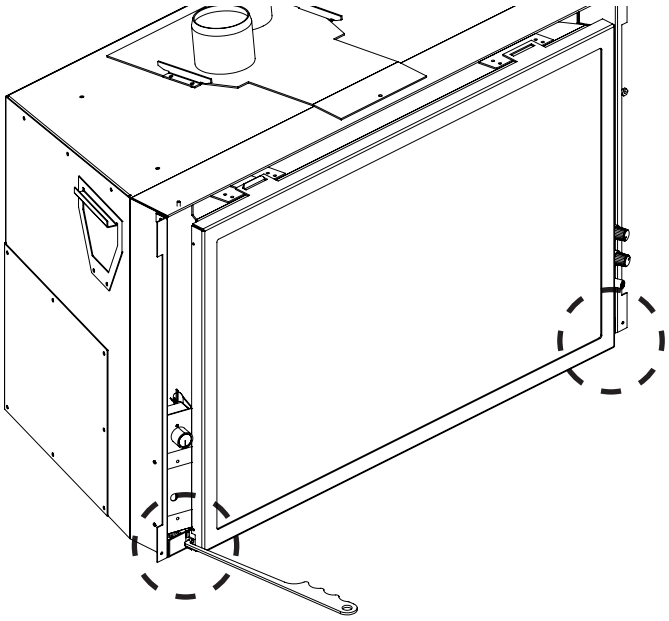

Figure 8: Door Release.

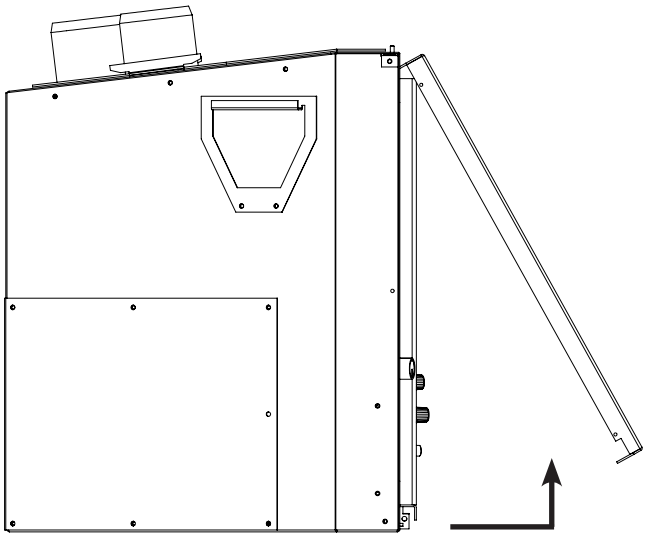

Figure 9: Door Removal.

Remove the glass door by placing the hooked end of the door release tool in the hole on the door latch mechanism (see Figure 8) and pulling the latch out then up. When the two (2) latches have been released, tilt the bottom of the door forward and then lift up to unhook the top door tabs (see Figure 9).

Re-assemble in the reverse order.

Warning: Do not touch or attempt to remove the glass if the fireplace is not completely cool.
Never operate the fireplace with the glass removed.

CAUTION GLASS MAY SEPARATE FROM DOOR.

Cleaning The Painted Surfaces:

Painted surfaces should be periodically wiped with a damp cloth when the unit is cool.

Removing Valve Cover:

The valve cover can be removed to access the gas valve.

1. Use a T-20 screwdriver to remove the eight screws that hold down the valve cover shown in Fig. 10.

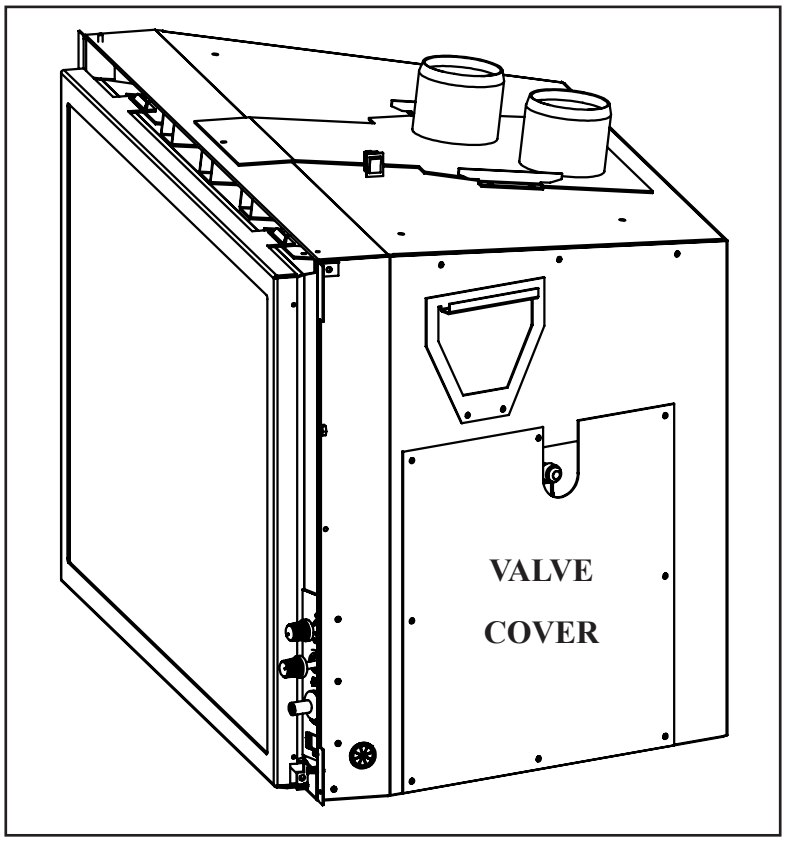

Figure 10: Valve Cover.

Fuel Conversion

TO BE INSTALLED BY A QUALIFIED SERVICE AGENCY ONLY

Please read and understand these instructions before installing.

WARNING: This conversion kit shall be installed by a qualified service agency in accordance with the manufacturer's instructions and all applicable codes and requirements of the authority having jurisdiction. If the information in these instructions is not followed exactly, a fire, explosion or production of carbon monoxide may result causing property damage, personal injury or loss of life. The qualified service agency is responsible for the proper installation of this kit. The installation is not proper or complete until the operation of the converted appliance is checked as specified in the manufacturer's instructions supplied with the kit.

Kit Parts List:

1 - Orifice (NG - #41 DMS or LP #54 DMS)
1 - Conversion label
1 - Installation instruction sheet

Carefully inspect the orifice supplied with this conversion kit. If it has been damaged or is missing, contact your dealer, distributor or courier company to have it replaced before starting this installation.

NOTE: The unit is shipped from the factory adjusted for use with NATURAL gas.

Conversion Kit Installation:

1. Turn control knob on the gas valve to the "OFF" position and shut the gas supply off at the shut-off valve upstream of the unit. CAUTION: The gas supply must be shut off prior to disconnecting the electrical power and before proceeding with the conversion. Allow the valve and unit to cool down to room temperature.
2. Remove the glass as shown in the Maintenance and Service - Glass Door Removal.
3. Carefully remove the bottom firebox liner.
4. Remove the burner as shown in the Maintenance and Service - Burner Removal.
5. Convert the burner orifice(s):
   a) Remove the main burner orifice with a 1/2" deep socket.
   b) Put a bead of pipe-thread sealant on the orifice threads before installing.
   c) Install the new orifice(s) from the kit into the orifice mount.
6. Convert the pilot injector:
   a) Using a $^{7}/_{16}$" wrench, turn the pilot head a ¼ turn counter-clockwise.
   b) Push the slider, with your finger or flat head screwdriver
      -Natural gas is marked NAT.
      -Propane gas is marked LP with an indicating hole between L and P.
   c) Turn the pilot head a ¼ turn clockwise; back to its original position.
7. Convert the SIT gas valve:
   a) Remove Valve Cover.
   b) Remove Hi/Lo valve knob extensions by pulling on them. They are pressed onto the gas valve knob.
   c) Remove the black protection cap from the HI/LO knob by hand shown in Figure 11.

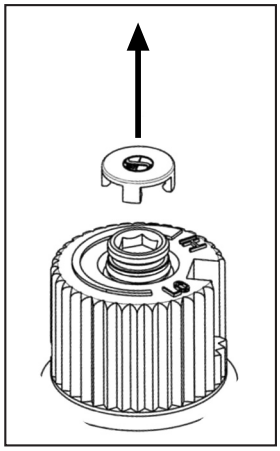

Figure 11: Removing valve cap.

d) Insert a 5/32" or 4 mm Allen wrench into the hexagonal key-way of the screw (see Figure 12), rotate it counter-clockwise until it is free and extract it.

e) Flip the screw (refer to Figure 13).

f) Using the Allen wrench as shown in Figure 12, rotate the screw clockwise. **WARNING!** Do not over tighten the screw.

g) Verify that if the conversion is from NG to LPG, the screw must be re-assembled with the red o-ring visible (refer to Figure 14). If the conversion is from LPG to NG, the red o-ring of the screw must not be visible.

h) Re-attach the black protection cap that was removed in step "c)". Refer to Figure 11.

i) Reinstall the knob extensions. They are keyed into the notch on the knob.

j) Reinstall the Valve Cover plate.

8. Reinstall the burner, porcelain panels, bowl, glass material, and glass door. Also refer to INSTALLATION - FIREBOX LINER & BURNER TRAY REMOVAL/INSTALLATION in your Owner's Manual. When re-installing the burner, ensure that the burner to pilot hood relationship is similar to what is shown in Figure 15.
9. Reconnect the main gas line if it was disconnected and open the shut-off valve at the gas line to the unit.
10. Use a small brush to apply a warm soapy water solution to all gas connections (use half dish soap and half warm water). If a gas leak is present, bubbling will occur. Gas leaks can be repaired by using an approved pipe thread sealant or approved Teflon tape. NEVER USE AN OPEN FLAME WHEN TESTING FOR LEAKS.

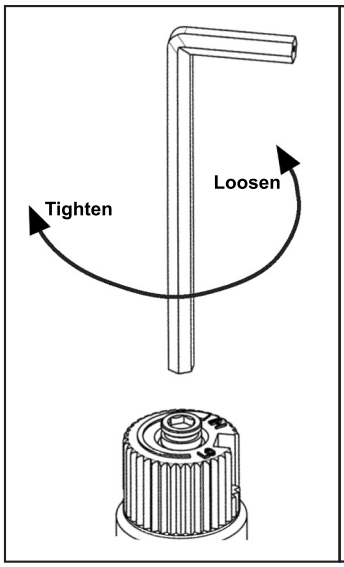

Figure 12: Removing valve screw.

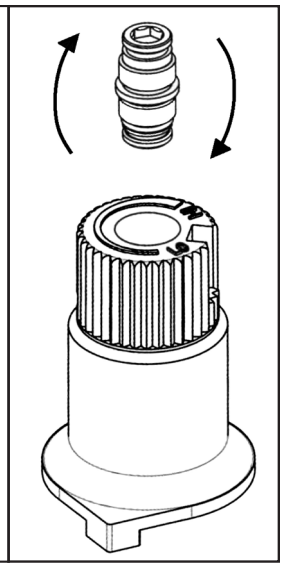

Figure 13: Flip valve screw.

11. Reconnect the electrical power to the unit.
12. Relight the main burner in both the "HI" and "LO" positions to verify proper burner ignition and operation and proper flame appearance.
13. MAKE SURE that the conversion label is installed on or close to the rating label to signify that the unit has been converted to a different fuel type.

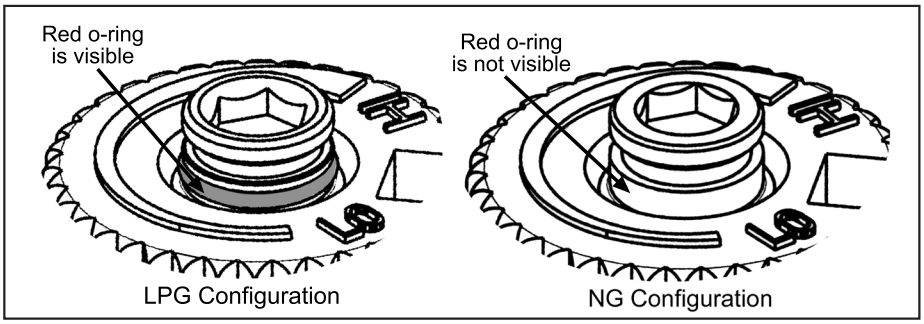

Figure 14: O-ring on valve screw.

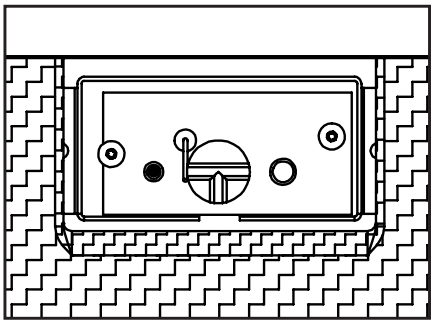

Figure 15. Ignitor assembly glass burner.

Initial Installation

WARNING: Operation of this heater when not connected to a properly installed and maintained venting system can result in carbon monoxide (CO) poisoning and possible death.

Clearances to Combustibles:

Maintain sufficient clearances for operation, service and maintenance.

- A minimum distance of 24" (610 mm) is required from the centerline of the unit to the sidewalls.
- Minimum clearance for any combustible facing is 30" (762 mm) from the bottom of the unit.
- A 12" (305 mm) wide mantel can be mounted at a minimum height of 36" (914 mm) from the bottom of unit.
- If installed at floor level there must be a minimum of 16" (406 mm) of non-combustible material in front of the unit. Once unit is rasied 2" or more no floor protection is required.
- Unit can be installed with combustible material underneath and in front of unit, as long as it is raised 4" off the floor.
- Minimum ceiling clearance is 60" from bottom of unit.

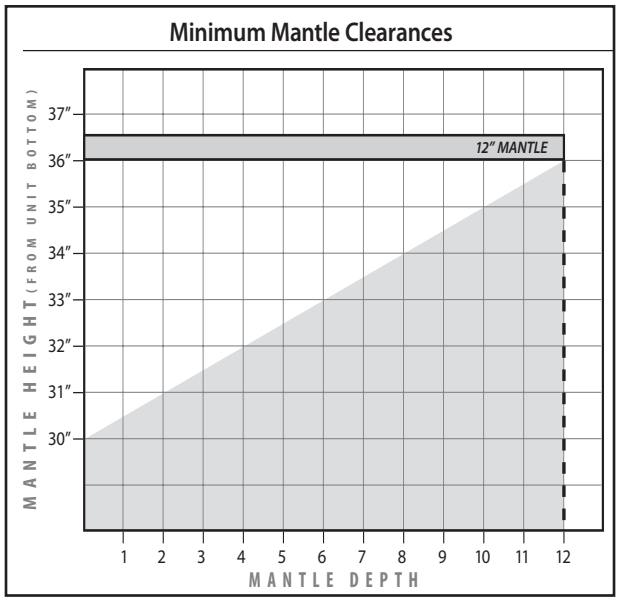

Figure 16: Mantle width and height.

Minimum Fireplace Size:

Table 4: Minimum dimensions of fireplace for E33 to be installed into.

	Width At Front	Width At Back	Height	Depth
Fireplace Dimensions	32" (813 mm)	20" (508 mm)	20" (508 mm)	16" (406 mm)

NOTE: Space must be provided for gas line on right side of unit for servicing purposes.

Direct Vent:

WARNING: This appliance has been designed to draw room air for proper heat circulation from the sides and bottom of the unit, and out the top front. Blocking or modifying these openings in any way can create hazardous situations.

The vent length for the E33G must be between 8ft (2.44 m) and 30ft (9.14 m).

This model is vented with a 3" intake and a 3" exhaust aluminum or stainless steel flex vent leading into a vertical termination cap. The flue collars of this model will fit inside of a standard 3" vent and must be fastened directly to the vent with three screws.. The exhaust vent and air intake are both located on the top of the unit.

Check periodically that the vents are unrestricted. Also ensure that all direct vent pipes have been properly sealed and installed after routine inspection or cleaning. The air intake and exhaust pipes must be installed in the correct locations on the top of the E33G.

Initial Installation

QUALIFIED INSTALLERS ONLY

Venting Fireplace Inserts:

The **ENVIRO** E33G may be installed and vented into any solid fuel fireplace that has been installed in accordance with the National, Provincial/State and local building codes and has been constructed of non-combustible materials. Before starting, refer to Initial Installation - Preparing Your E33G For Installation. Please reference the information in Table 5 and Figures 17, and 19.

An approved chimney liner and rain cap must be used. A throat connector or flashing **must** be installed to ensure a tight seal, top performance, safety and efficiency. Carefully follow the manufacturer's instructions that accompany the chimney liner kit. Use double walled aluminum flex vent (3" flex conversion piece and 4"x 6 5/8" cap) from any of the following approved products; Simpson Dura-Vent (Direct Vent GS) or (ICC Excel Direct). If necessary, remove the vent collar plate from the top of the insert and connect it securely to the liner with sheet metal screws.

Check for any tears in the liner at this point. IMPORTANT: The screws that hold the vent collar plate in its approved position must be installed.

NOTE: If the E33G unit is pulled out of its installation, and the vent air intake system is disconnected for any reason, ensure that the vent-air intake pipes are re-sealed with high-temperature sealant and reconnected with three (3) sheet metal screws evenly spaced.

Table 5: Vent termination clearances

Minimum Clearance*	Description
3 ft (0.9 m)	Clearance above the highest point where it passes through a roof surface, refer to Figure 17.
24 in (0.6 m)	Clearance above a roof ridge, any other portion of a building, or any other obstruction within a horizontal distance of 10 feet (3 m), refer to Figure 17.
5 ft (1.5 m)	Clearance for a vent or chimney above either the highest connected appliance drafthood outlet, or flue collar.
6 ft (1.83 m)	Clearance to mechanical air supply inlet.
3ft (0.9m)	Clearance to each side of center line extended above meter/regulator assembly.
6 ft (1.83 m)	Radial clearance around service regulator vent outlet.
12 in (30 cm)	Clearance above grade, verandah, porch, deck, or balcony.
3 ft (0.9 m)	Clearance to a building opening or combustion air inlet of another appliance, except with the approval of the authority having jurisdiction for the following reduced clearances.
9 in (0.23 m)	Exception for inputs up to and including 50,000 Btu/h (15kW)
12 in (0.3 m)	Exception for inputs exceeding 50,000 Btu/h (15kW) but not exceeding 100,000 Btu/h (30kW)

*Clearances are in accordance with local installation codes and the requiremenets of the gas supplier

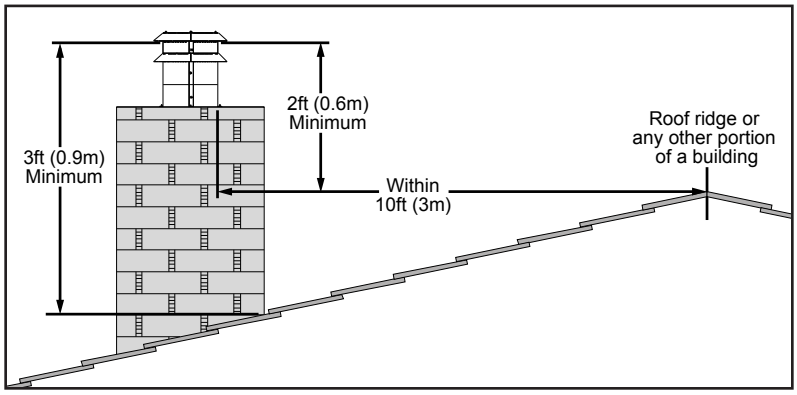

Figure 17: Roof Clearances.

Initial Installation

QUALIFIED INSTALLERS ONLY

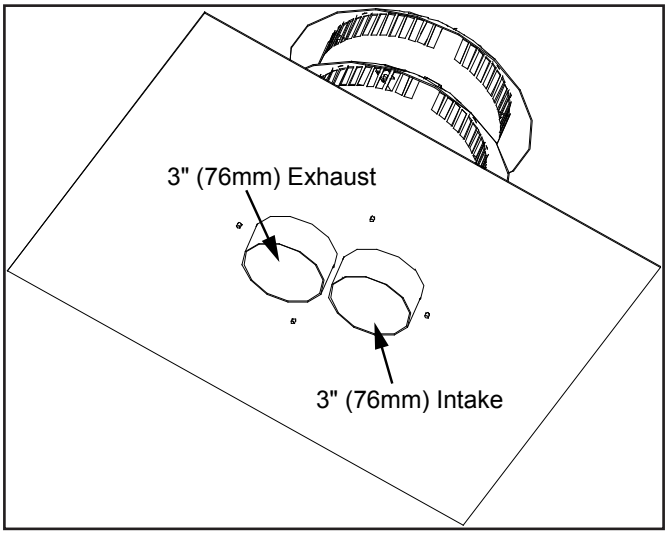

Figure 18: Generic Vent Cap Underside.

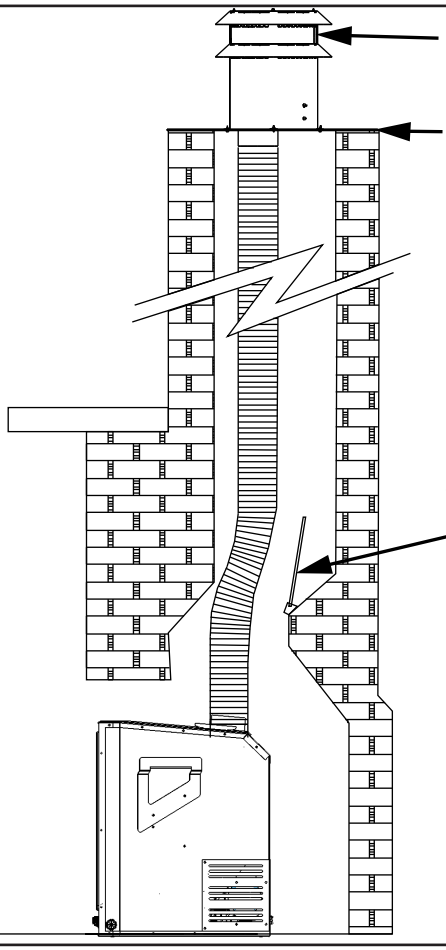

The height for the vent must be between 8 ft (2.44 m) and 30 ft (9.14 m).

Install a sealed vent cap to prevent leakage of room air up through chimney.

The intake and the exhaust are 3" (76mm).

Measure the height of the chimney beforehand and purchase the appropriate venting. Never attempt to over-stretch a flexible liner to accommodate the height of the chimney. Every joint in the venting must be secured with three (3) #8 x 3/8” HWH sheet metal screws and an appropriate sealant (either silicone or stove cement).

The flue damper can be fully blocked open or removed for installation of the E33G; the smoke shelves, shields and baffles may be removed if attached by mechanical fasteners.

The fireplace and fireplace chimney must be clean, in good working order and constructed of non-combustible materials.

Make sure that all chimney cleanouts are tight fitting and will not permit air to leak into the chimney.

Refractory, glass doors, screen rails, screen mesh and log grates can be removed from the fireplace before installing the E33G.

Figure 19: Installation of E33G DV .

Initial Installation

QUALIFIED INSTALLERS ONLY

Direct Vent Vertical Vent Termination:

INSTALLATION INSTRUCTIONS:

1. Plan your installation and clearances to combustibles. The E33G may be installed and vented into any solid fuel fireplace that has been installed in accordance with the National, Provincial/State and local building codes and has been constructed of non-combustible materials. Also refer to the Initial Installation - Preparing Your E33G For Installation and Clearances to Combustibles sections. Refer to Figure 19 throughout installation.
2. Stretch the Ø3" (76mm) flex vent liners to the length needed to ensure they can be easily connected to the vent terminals.
3. Install the flex pipe assembly up through the chimney, ensure that the pipe slides through far enough to connect onto the vent cap.
4. Most vent caps can be installed onto chimneys with flue openings up to 16" (406mm) x 16" (406mm) and the actual flashing is 18"x18" (refer to Figure 20). If the chimney is smaller the cap should be trimmed down and folded over.
5. Apply a bead of stove cement sealant to the top section of the Ø3" (76mm) exhaust vent collar plate. Slide the Ø3" (76mm) flex vent over the flue collar and secure with three (3) sheet metal screws evenly spaced.

   Note: If fireplace opening is lower than 24" (610 mm), remove the vent collar plate from the top of the insert (see Initial Installation - Preparing Your E33G For Installation) and connect it securely to the liner as stated in Step 4. Check for tears in the liner at this point.
6. Place a bead of high temperature silicone on the intake collar of the fireplace, slide the Ø3" (76mm) flex intake liner over the collar, secure the flex liner with three (3) sheet metal screws evenly spaced.
7. At the top of the chimney, apply a bead of stove cement sealant to the Ø3" (76mm) pipe of the exhaust vent terminal (refer to Figure 18). Slide the flex liner onto the vent terminal and secure with three (3) sheet metal screws evenly spaced.
8. Place a bead of high temperature silicone on the intake collar of the vent terminal (refer to Figure 18). Slide the Ø3" (76mm) flex intake liner over the collar, secure the flex liner with three (3) sheet metal screws evenly spaced.
9. Make a tight connection between the gas fireplace insert flue collar and the fireplace chimney at the top of the chimney. Secure the vent terminal to the chimney using adequate sealant, and according to local building codes.

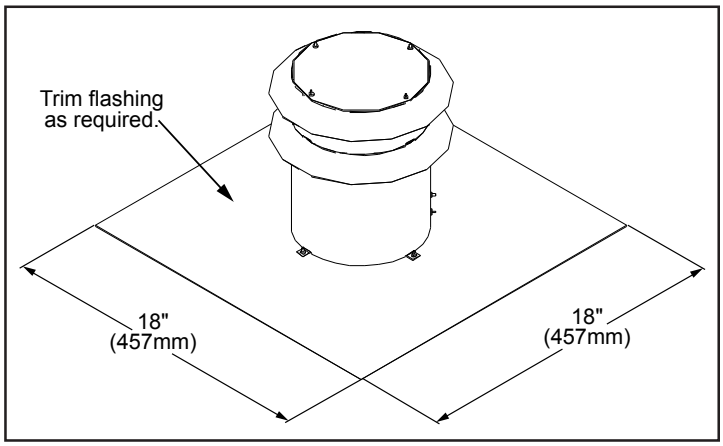

Figure 20: Generic Vent Cap Dimensions.

APPROVED TERMINATIONS:

-Simpson Dura-Vent

46DVA-VCH cap with 46DVA-GK termination adapter
or
46DVA-CL33 termination kit

-ICC

TM-4SVT cap with TM-CTA termination adapter

Initial Installation

QUALIFIED INSTALLERS ONLY

Installing the unit:

- Remove the packaging from the appliance and surround panels; check to make sure there is no damage. Carefully check the glass door. Do not use the unit if it is damaged. In the event damage is found, please report it to your dealer as soon as possible.

- Carefully clean the fireplace and flue before installing the stove. Failure to do so may result in fumes or soot being blown into the room and may cause a fire leading to death or serious injury.

1. Remove the unit from the box and remove all packaging material from the appliance.
2. Remove door. See Maintenance and Service - Glass Door Removal.
3. Remove glass material and all wrapping material from the stove. Remove wrapping material from porcelain liners and check for any damage. If damage is observed, do not use unit and contact your local dealer.
4. Check that the chimney clean outs fit properly. The flue damper must be fully blocked open or removed for installation of the E33G; the smoke shelves, shields and baffles may be removed if attached by mechanical fasteners.
5. If the fireplace opening is lower than 24" (610 mm), remove the vent collar plate from the top of the insert by unscrewing the two (2) T-20 Torx screws located on the center top of the stove above the door opening (see Figure 21). Slide the collar plate backwards. Properly secure the vent collar plate to the flexible vent pipe liner(s) previously installed in the chimney. Be careful not to over-stretch the liner(s).
6. Place the unit part way into the fireplace. Connect the gas line to the ⅜" NPT pipe nipple at the lower left rear of the unit using locally approved methods (see Initial Installation - Gas Line Connection). Place the electric cable so it can be connected to the power supply.
7. As you push the unit into its final position in the fireplace, if the vent collar plate was removed, reinstall it to the stove by sliding it along the top of the unit and secure with the screws previously removed.
8. Adjust the levelling legs to ensure the unit is level and high enough if a base shelf and/or riser is to be installed. There are four levelling legs on the bottom of the unit (shown in Figure 22).

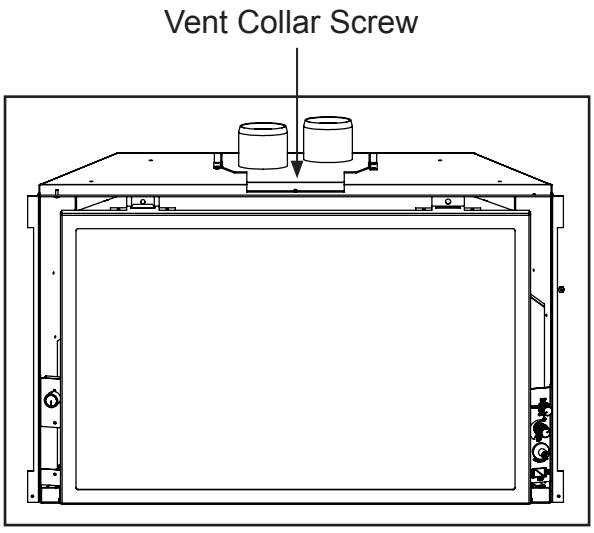

Figure 21: Vent Collar Plate Screw Location.

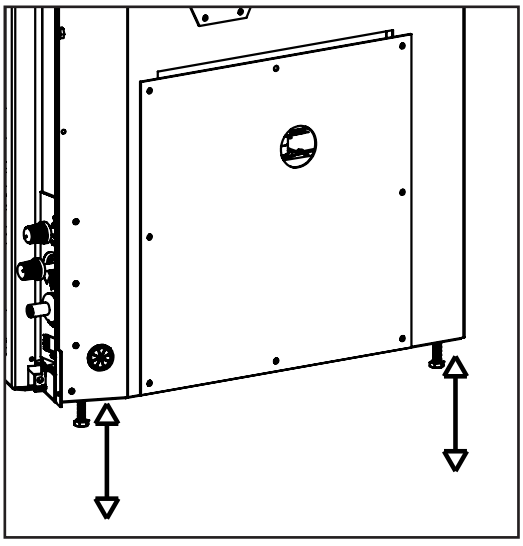

Figure 22: Levelling Legs Position.

Zero Clearance (ZC) Fireplace Installation:

The metal floor of the ZC solid fuel firebox can be removed to allow the installation of the insert. THE CLEARANCE TO COMBUSTIBLE MATERIAL UNDER THE INSERT IS 4" (102 mm). YOU MUST USE THE LEVELING LEGS TO RAISE THE INSERT A MINIMUM OF 4" (102 mm) IF THE UNIT IS TO BE INSTALLED ON COMBUSTIBLE MATERIAL. The optional Base Shelf and Riser are recommended to fill the space under the unit once raised. The sidewalls and top structure of the solid fuel firebox cannot be altered with the exception of: removal of dampers, removal of smoke shelf or baffle, removal of ember catches, removal of log grate, removal of viewing screen/curtain, and removal of doors. THE ORIGINAL FIREPLACE MAY NEVER BE RETURNED TO SOLID FUEL USE IN THIS CONDITION.

IMPORTANT: If the factory-built fireplace has no gas access hole(s) provided, an access hole of 1.5 inch (37.5 mm) or less may be drilled through the lower sides or bottom of the firebox in a proper workmanship like manner. This access hole must be plugged with non-combustible insulation after the gas supply line has been installed. Cutting any sheet-metal parts of the fireplace, in which the gas fireplace insert is to be installed, except as tested for the floor is prohibited.

The included label plate shown below must be permanently attached inside the cavity of the fireplace in a visible location.

WARNING: This fireplace has been converted for the use with a gas fireplace insert only and cannot be used for burning wood or solid fuels unless all original parts have been replaced, and the fireplace re-approved by the authority having jurisdiction.

C-11168

Figure 23: Fireplace Altered Plate.

Initial Installation

QUALIFIED INSTALLERS ONLY

Electrical Requirements:

The fan will not operate if the appliance is cold. Once the unit is lit and the fan is set to the desired level, the fan will automatically turn on upon reaching operating temperature. The fan will automatically turn off after the appliance has cooled down.

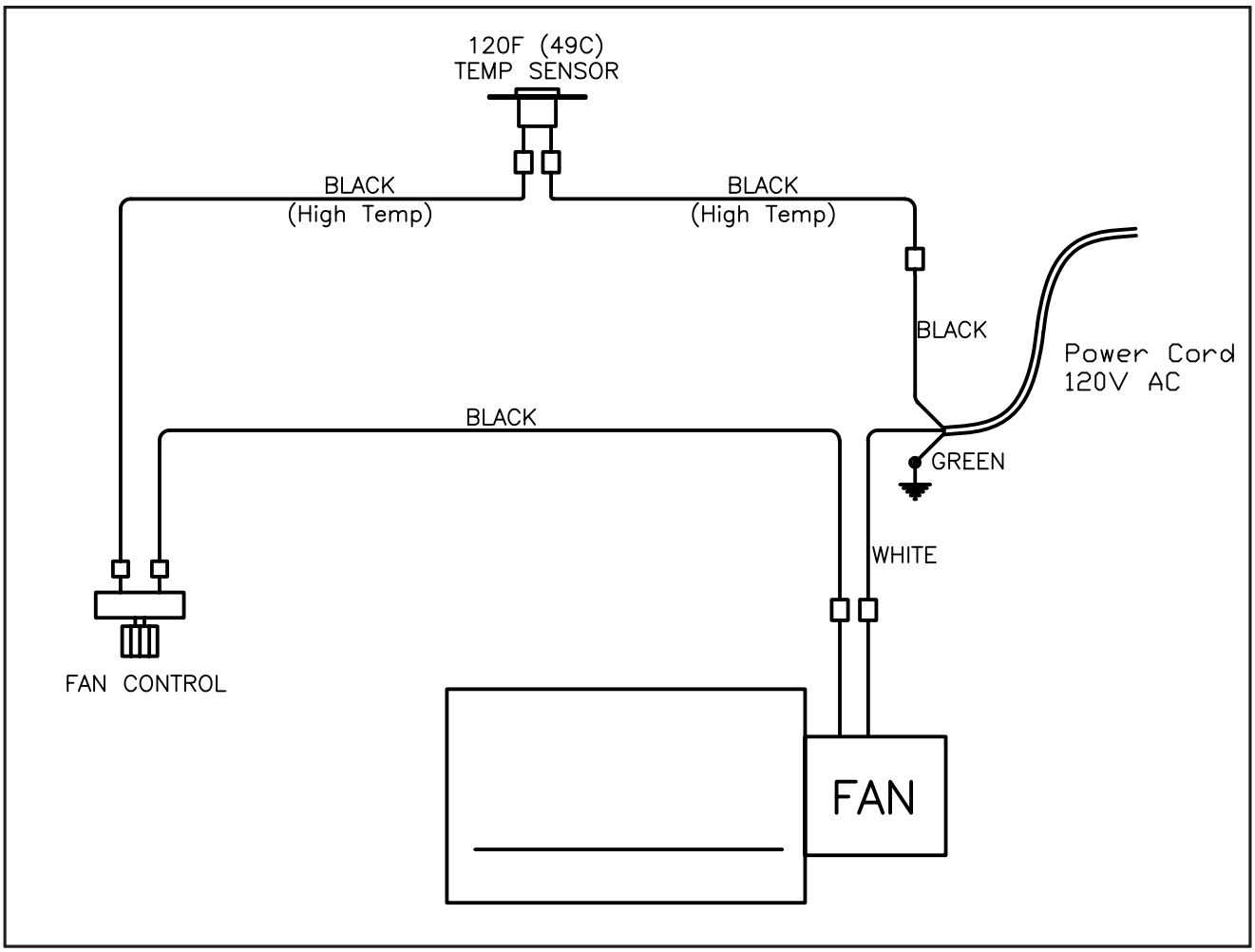

Figure 24: Fan wiring diagram.

The fireplace must be electrically connected and grounded in accordance with local codes or, in the absence of local codes, with the current CSA C22.1 Canadian Electrical Code Part 1, Safety Standards For Electrical Installations, or The National Electrical Code ANSI / NFPA 70 in the US.

WARNING: The electrical grounding instructions must be followed. The fan kit is equipped with a three-prong (grounding) plug for your protection against shock hazard, and should be plugged directly into a properly grounded three-prong outlet. DO NOT cut or remove the grounding prong from this plug.

CAUTION: When servicing controls, label all wires prior to disconnection. Wiring errors can cause improper and dangerous operation. Verify proper operation after servicing.
If any of the original wire as supplied with the appliance must be replaced, it must be replaced with 18 AWG wire with a temperature rating of 105°C

Initial Installation

QUALIFIED INSTALLERS ONLY

Gas Line Connection:

WARNING: Only persons licensed to work with gas piping may make the necessary gas connections to this appliance.

Gas Line Connection:

• A ⅜" 45° flare and flex connector are supplied with the unit (see Figures 25 and 26). Consult the local authorities for local codes or use the CAN/CGA B149 (1 or 2) installation code in Canada. In the US, gas installations follow either local codes or the current edition of the National Fuel Gas Code ANSI Z223.1.

• If the factory-built fireplace has no gas access hole(s) provided, an access hole of 1.5 in (37.5mm) or less may be drilled through the lower sides or bottom of the firebox in a proper workmanship like manner. This access hole must be plugged with non-combustible insulation after the gas supply line has been installed.

• A shut-off valve is not supplied with this unit but one should be installed.

• The appliance and its shut-off valves must be disconnected from the gas supply piping system during any pressure testing where the pressure **exceeds** ½ psig (3.45 KPa) or the valve will be damaged.

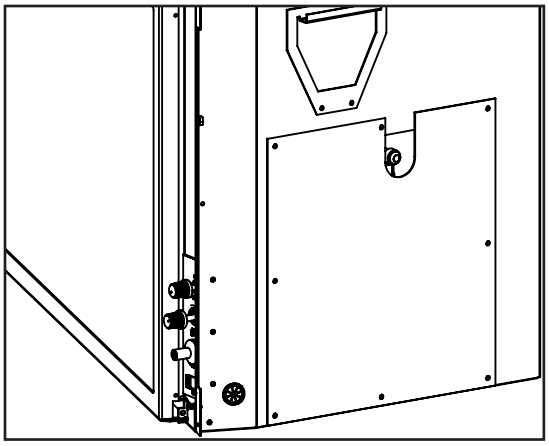

Figure 25: Gas Connection Location.

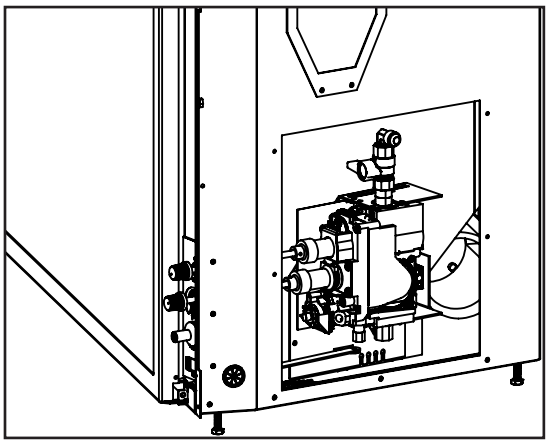

Figure 26: ⅜" Gas Valve with Cover Removed.

Table 6: Orifice and Pressure Information.

E33G With Glass Burner & Nova Valve

Main Burner	Natural Gas	Propane Gas
Orifice:	#41 DMS	#54 DMS
Max. Manifold Press:	3.8 W.C. (0.95 KPa)	11.0 W.C. (2.74 KPa)
Min. Manifold Press:	1.2 W.C. (0.30 KPa)	3.7 W.C. (0.92 KPa)
Max. Supply Press:	10.5 W.C. (2.62 KPa)	13.0 W.C. (3.24 KPa
Min. Supply Press:	3.5 W.C. (0.87 KPa)	8.0 W.C. (1.99 KPa)
Max. Input:	31,000 BTU/hr (9.09 KW)	28,000 BTU/hr (8.21 KW)
Min. Input:	17,000 BTU/hr (4.98 KW)	16,500 BTU/hr (4.84 KW)

Initial Installation

QUALIFIED INSTALLERS ONLY

TO TEST VALVE PRESSURES (INPUT RATES):

The pressure taps are located on the front side of the valve (see Figure 27).

1. Remove valve control knobs.
2. Using a long flat bladed screwdriver, turn set screw counter-clockwise to loosen.
3. Place $^{5}/_{16}$ in (8 mm) I.D. hose over the pressure taps.
4. Check pressures using a manometer.
5. When finished, remove hose and tighten set screw.
6. Re-install the knobs. Pointer on knobs can be removed and oriented correctly to point at the right location.

Always check for gas leaks with a soap and water solution after completing the required pressure test.

NEVER USE AN OPEN FLAME FOR LEAK TESTING.

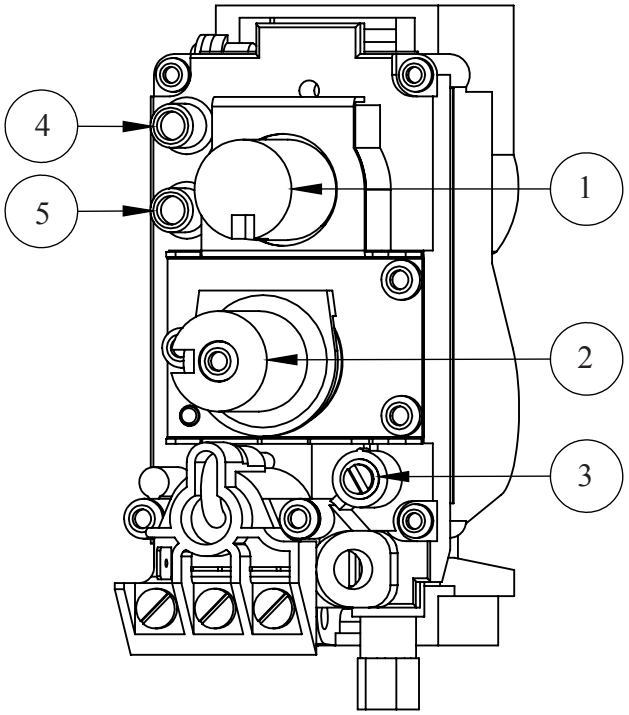

Figure 27: Valve Details.

Table 7: Valve Details.

Item Number	Description
1	Control Knob (On/Off/Pilot)
2	Gas Flow Adjustment Knob
3	Pilot Adjustment Screw
4	Inlet Pressure Test Point
5	Outlet Pressure Test Point

Initial Installation

QUALIFIED INSTALLERS ONLY

Adjusting The Pilot Flame:

The pilot flow adjustment is set to maximum at the factory and should not need to be adjusted. The pilot flame should envelope ⅜" to ½" (10 to 13mm) of the thermocouple (see Figure 28). However, should the need arise, follow Steps 1- 2 below.

1. The adjustment screw can be reached through the front of the unit using a 10 inch long blade screw driver (see Figure 27 for location on valve).
2. Turn the adjustment screw clockwise to decrease or counterclockwise to increase pilot flame.

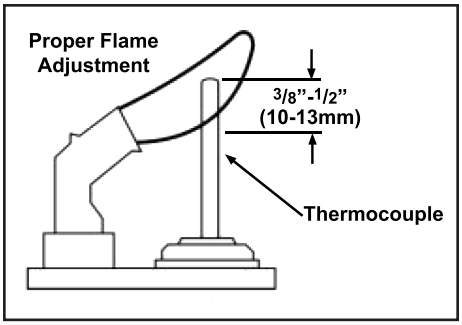

Figure 28: Proper Pilot Flame.

Secondary Installation

Optional Base Shelf & Riser:

The E33G Base Shelf (1⅝" (41 mm) high) and Base Shelf Riser (2⅛" (54 mm) high) are components that can be combined to create a riser with an overall height of 2 3/16" (55 mm). This shelf can be installed with or without the riser and can be used when the hearth in front of the unit is lower than the fireplace opening. Additional Base Shelf Risers can be fastened together to increase the height in increments of 2⅛" (54 mm). This Base Shelf may be used in conjunction with the any of the E33G surround panel options, and it may also be used with the E33G Trimmable Surround. The Base Shelf and Riser are sold separately.

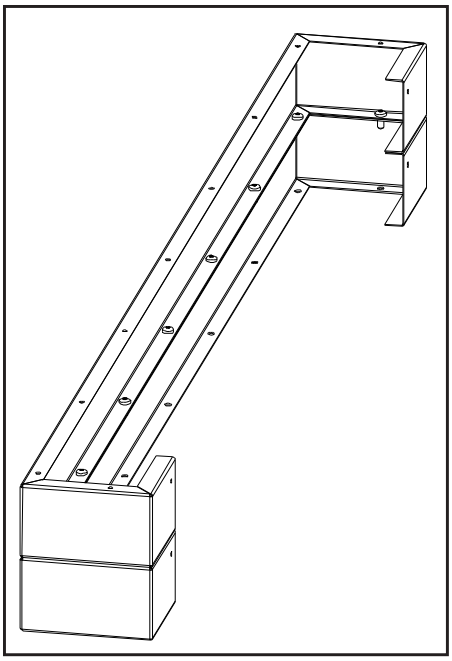

Figure 29: Combining 2 Base Shelf Riser.

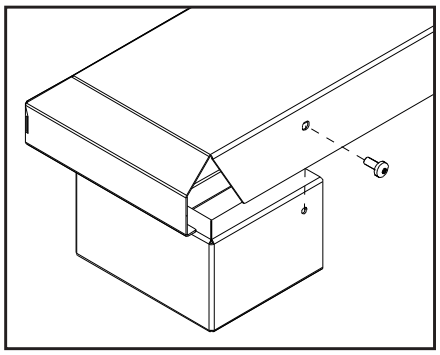

Figure 30: Installing Base Shelf onto Riser.

Installation:

1. If unit is running, turn it off and allow it to cool completely.
2. When using more than one riser each level must be attached using nine (9) #8 T-20 screws provided (see Figure 29).
3. If installing with riser(s) the Base Shelf is to be fastened to the riser(s) with one T-20 screw at each end of the back (see Figure 30).
4. The leveling legs on the E33G may need to be adjusted to match the height of the riser and shelf.
5. Center the Base Shelf assembly in front of the unit flush with the bottom of the unit.
6. Install surround if required.

Secondary Installation

Optional 3 Trimmable Panels:

Trimmable Panel Install:

The trimmable panel is installed by sliding slots in the panel into screws on the stove. Two screws must be installed at the bottom of the Side Extensions.

INSTALLATION:

1. Using a T20 screwdriver, screw one (1) #8-32 x .5" screws approximately 1/4" into the bottom of each Side Extension (see Figure 32).

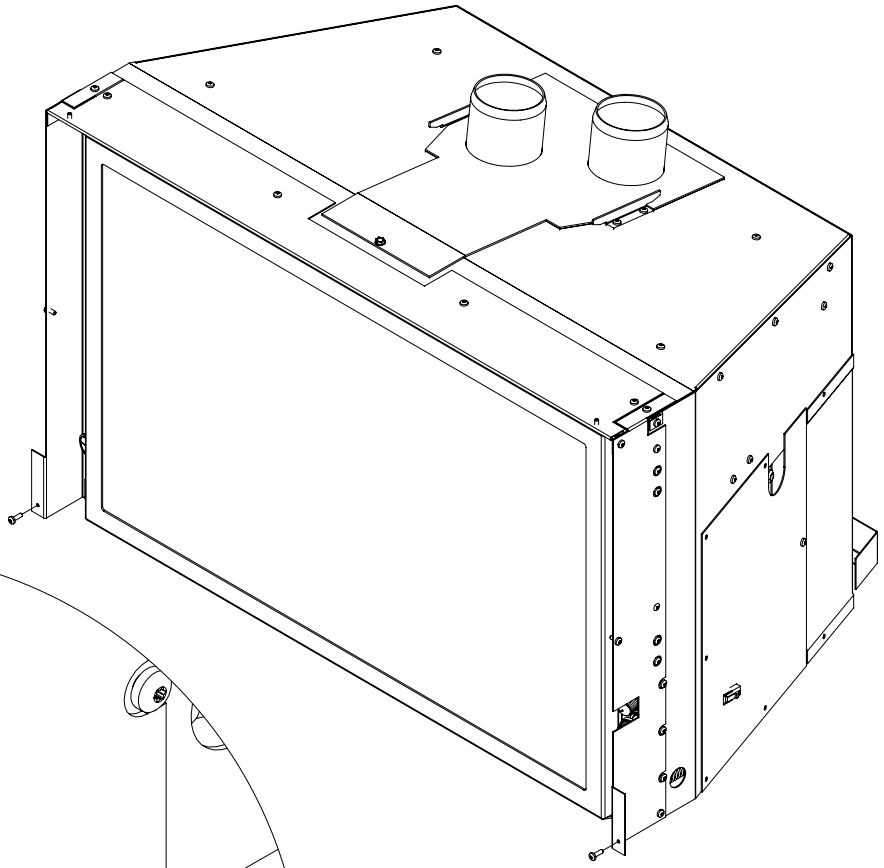

Figure 31: Trimmable Panel Screw Install.

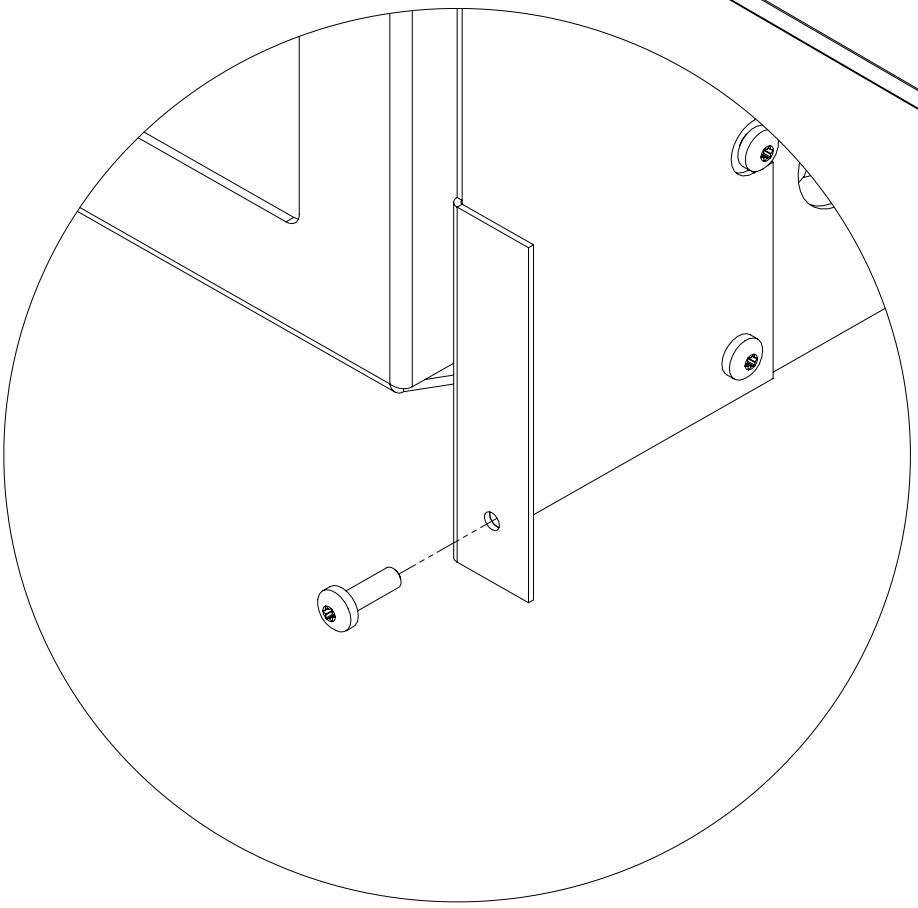

Figure 32: Trimmable Panel Screw Install Close-up.

Secondary Installation

Optional 3 Trimmable Panels:

Modifying the Surround Panel:

The E33 Trimmable Surround Panels are large rectangular panels that may be cut for use in cases that a non-standard fireplace opening (e.g. an arched opening) is to be filled. Optionally this surround can be left uncut and placed in front of the fireplace opening.

1. Measure the fireplace opening and/or make a template of the fireplace opening.

2. Transfer the measurement to the Trimmable Surround.

3. If desired, offset the measurements by approximately 1/8" (3mm) to the inside; this will allow for the panel to be placed just inside the fireplace opening for a cleaner appearance.

4. Cut along the preferred line (from direct measurements of offset) and remove any sharp edges.

5. The panel can be touched up with a high temperature metallic black paint available from your dealer.

INSTALLATION:

1. Using the supplied hardware install a Trimmable Panel Bracket, on its short leg, onto each side of the stove using a T-20 Torx screwdriver. See Figure 31 for the screw location and bracket orientation.

2. Install the Trimmable Panel, **WITH THE FLANGES FACING OUT**, onto the Side Extensions and in front of the Panel Brackets by hooking the Panel's top flange onto the alignment pins on top of the Top Extension (See Figure 33).

3. Using the remaining hardware attach the Trimmable Panel to the Panel Brackets using a T-20 Torx screwdriver (See Figure 34).

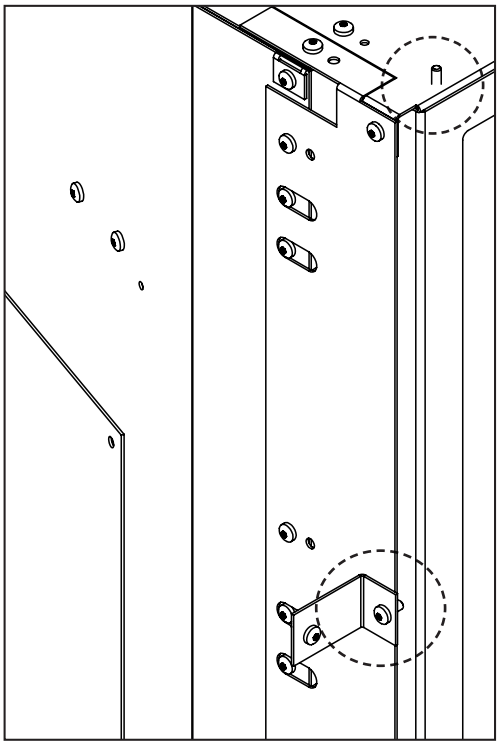

Figure 33: Panel Bracket Installed and Pin Location

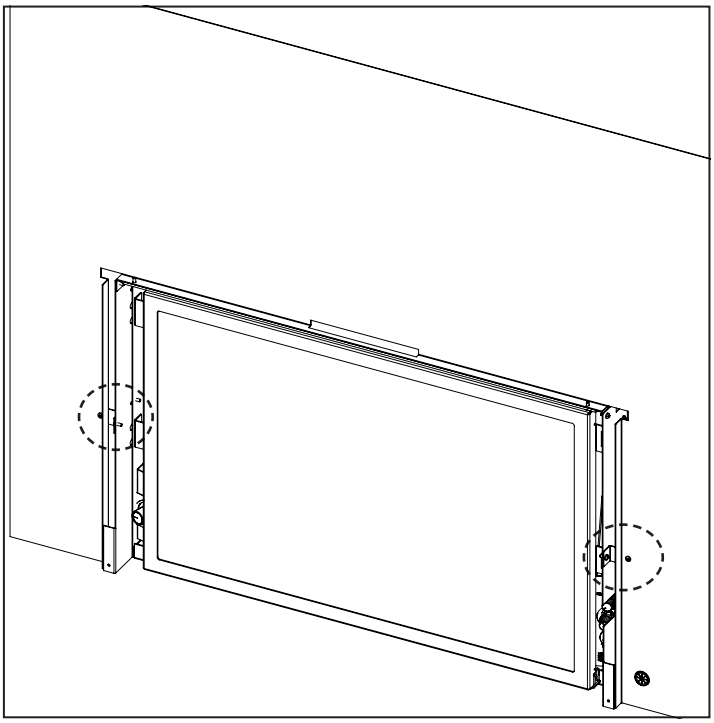

Figure 34: Trimmable Panel Installed

Secondary Installation

Surround Panel Installation:

WARNING: The surround becomes hot when the unit is operating; ensure that the unit is turned off, and that it has cooled to room temperature before beginning this installation.

	Height	Width
3-Sided Surround	26 1/2" (673 mm)	44 1/8" (1121 mm)

Table 8: Surround Dimensions.

Please check components supplied with this kit. If components are missing or have been damaged, contact your dealer, distributor or courier company before starting this installation.

IMPORTANT: The panel must not seal ventilation openings in the fireplace.

INSTALLATION:

If Installing a Contemporary or Extruded surround panel lift the access door up until it locks in place. Lift the panel upright in front of the fireplace with the top mounting flange pointing towards the fireplace. Slide the panel over the corresponding screws on top of the Top Extension and at the bottom of the Side Extension on each side (see Figure 35). Ensure the panel is secure before releasing it. The bottom screws can be tightened on the Contemporary and Extruded surrounds for a more permanent install.

REMOVAL:

Lift the surround straight up in order to unhook it from the screws. Pull the surround away from the fireplace.

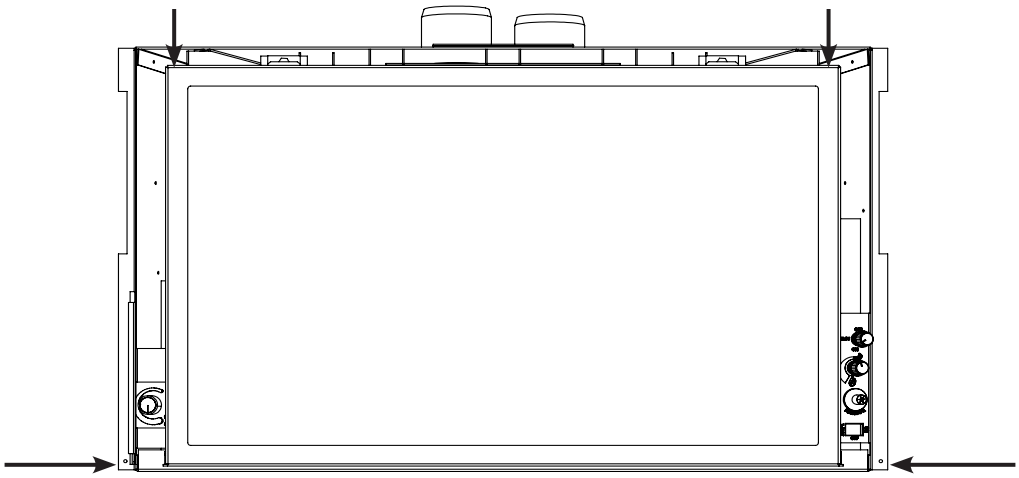

Figure 35: Screw Locations.

BURNER SWITCH WIRING INSTALLATION:

The burner switch supplied with the surround comes pre-installed and wired. The wiring from the burner switch simply needs to be connected to the wiring on the E33 unit.

The wiring harness for the burner switch has one (1) blue wire, one (1) grey wire and two (2) purple wires.

The blue wire connects to the blue wire on the E33 unit, the grey wire connects to the grey wire on the E33 unit, and the purple wires are used to connect an optional thermostat.

CLEANING:

Painted surfaces should be periodically wiped with a damp cloth. **Never clean the face when it is hot.**

Secondary Installation

Safety Screen Installation:

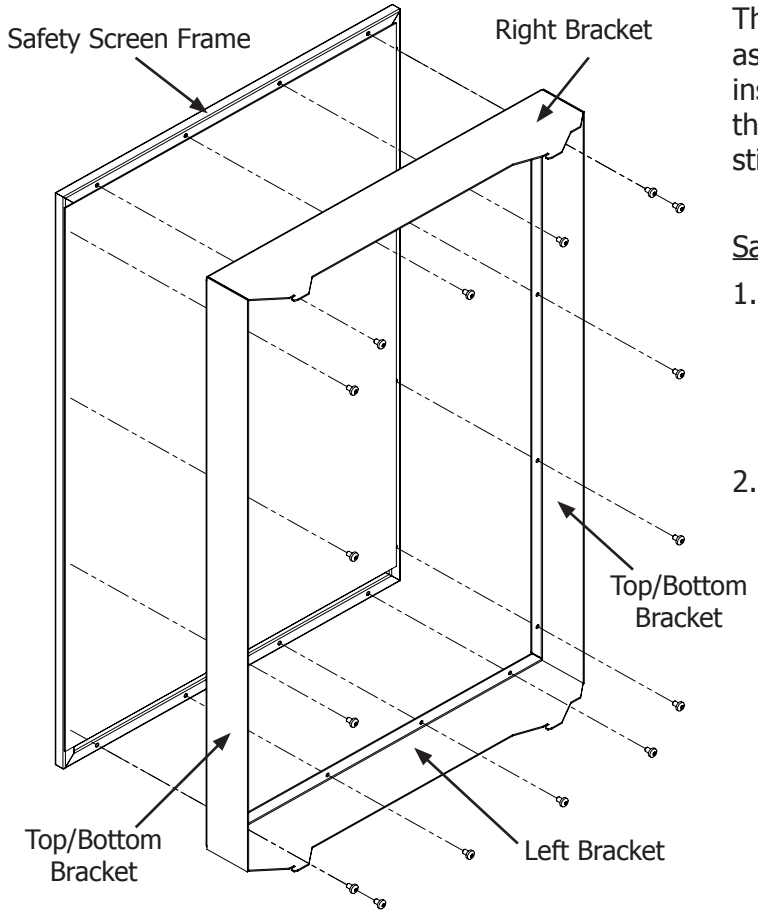

Figure 36: Installing Safety Screen Mounts.

The safety screen supplied with the unit must be assembled first before it can be installed. When installed, the screen should not extrude out any farther than the surround panel if the cabinet extensions are still installed.

Safety Screen Assembly

1. Attach the left, right, top/bottom brackets onto the safety screen using a T20 screwdriver and the supplied sixteen (16) #8 T20 screws (see Figure 36). Do not over-tighten the screws, doing so could cause them to strip out of the screen frame.
2. Lift the face upright in front of the fireplace with the four (4) hooks pointing towards the fireplace. Slide the hooks into the corresponding brackets on each side of the cabinet (see Figure 38). Ensure the hooks are secure before releasing the safety screen.

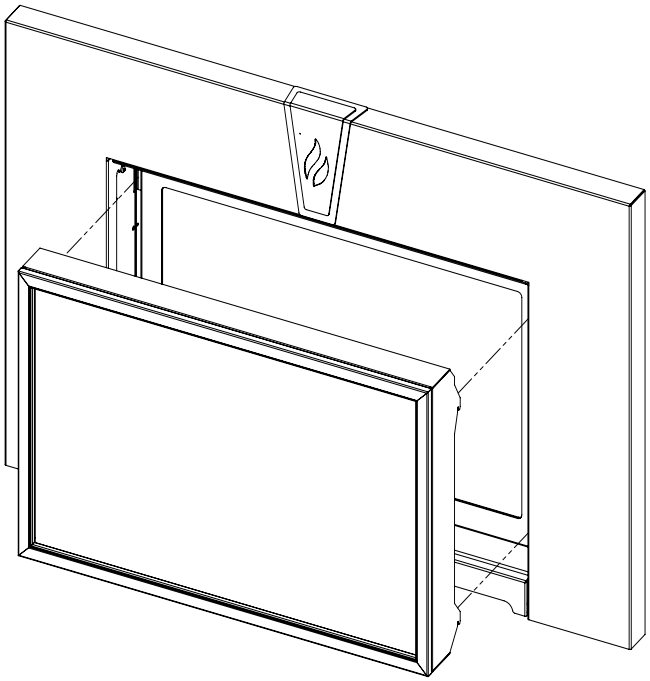

Figure 37: Installing Safety Screen onto Brackets.

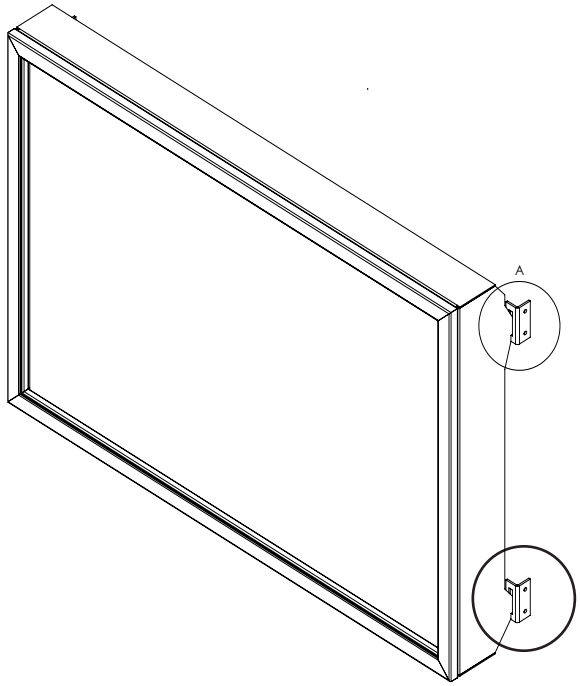

Figure 38: Installing Safety Screen onto Cabinet Bracket (Parts removed for clarity)

Secondary Installation

Firebox Liner and Burner Tray Removal/Installation:

NOTE: The porcelain on the firebox liners is fragile and should be handled gently.

WARNING: Failure to position the parts in accordance with these diagrams or failure to use only parts specifically approved with this appliance may result in property damage or personal injury.

1. **Ensure the E33G is turned off and allow the unit to completely cool.**

2. Remove the glass door as shown in the Maintenance and Service - Glass Door Removal.

WARNING: Do not touch or attempt to remove the door if the fireplace is not completely cool. **Never operate the fireplace with the door removed.**

3. Remove the glass material (if installed).

4. Use the following steps to remove the liners and the burner tray.

NOTE: Follow the steps in the reverse order for reassembly.

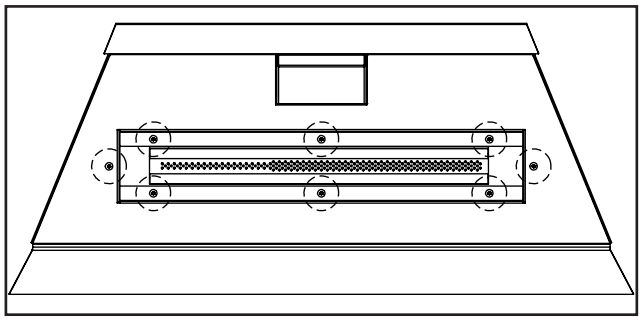

Figure 39: Remove the eight T20 screws and then remove the glass tray panel by lifting up.

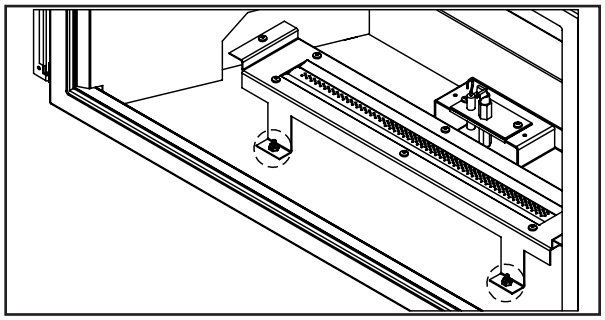

Figure 40: Remove the two nuts which hold down the burner. Gently pull the burner forward to remove it from the Venturi Box.

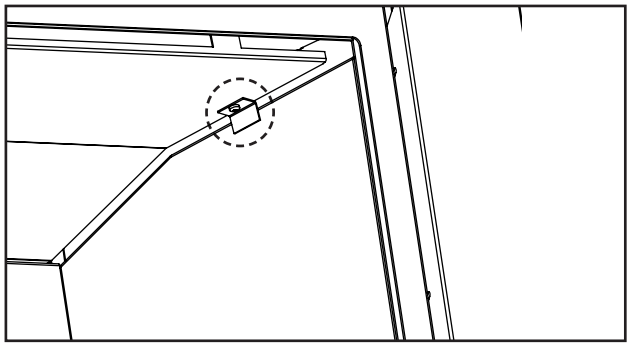

Figure 41: Remove the side panel retainer clips which secure the side.i

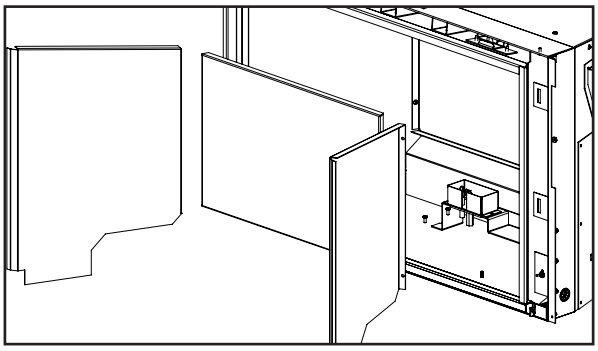

Figure 42: Remove the side panels then the back panel.

Secondary Installation

Installing the Glass Burner Media:

Pour the supplied glass media into the tray and evenly distribute over the entire tray area as shown in Figure 43. There is 3.5lbs of glass included which is just enough for a 0.250" - 0.375" thin layer to cover the area shown. Ensure that the pilot flame slot remains clear of any glass.

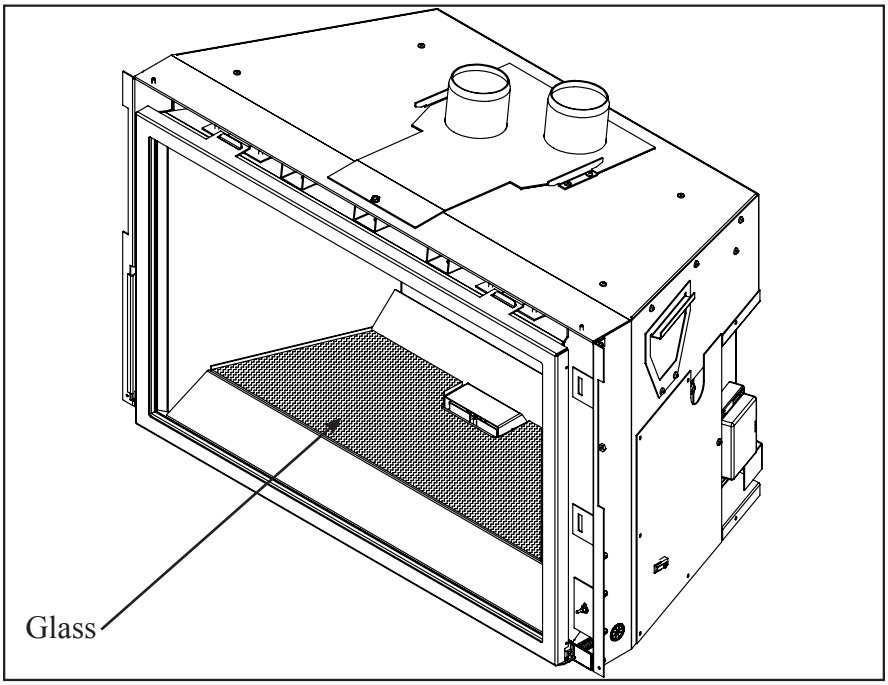

Figure 43: Glass tray burner with glass installed.

If the Rock burner option is being installed use the supplied glass media and fill the up the burner area only as shown in Figure 44. Only fill until the glass is flush with the bunrner tray, much less glass is used with this set-up. See instruction sheet with rocks for further set-up info. **ONLY USE SUPPLIED GLASS MEDIA.**

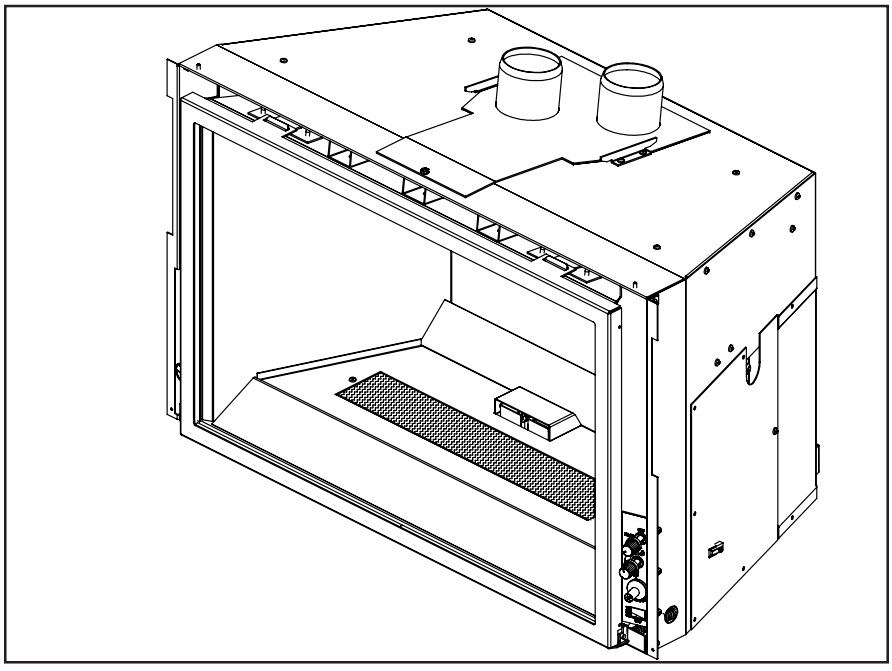

Figure 44: Glass tray burner with glass for Rock Burner.

Trouble Shooting

Problem	Possible Cause	Solution
The main burner does not ignite when called for.	The gas valve may not be on.	• Check that the gas control knob is in the "ON" position.
	Thermostat is not calling for heat.	• Adjust the thermostat several degrees above ambient temperature.
	Problem with gas valve.	• Use a DC voltmeter to measure the voltage across the TPTH and TP terminals. Main operator voltage: Open circuit ≥ 325mV Closed circuit ≥ 100mV • If voltage is not present, check the control circuit for proper operation. • If proper control system voltage is present, replace the gas control.
No spark at pilot.	Defective piezo ignitor.	• Check connections to ignitor. • If ignitor connections are good but no spark, replace ignitor.
	Broken spark electrode.	• Check for broken ceramic insulation, replace electrode if broken.
	Wire damaged to electrode.	•Replace ignitor.
Pilot will not remain lit.	Problem with thermocouple circuit.	• Check for proper connection of the thermocouple to the front of the valve. If loose, fully tighten. • Check pilot for full flame impingement around thermocouple. If flame is too small, check gas pressure, adjust pilot rate screw, check pilot head for damage. Check pilot orifice for debris. • Check thermocouple voltage at valve. It must be greater than 5 mV. If low, replace thermocouple.
	Air in gas line (pilot dies while knob is depressed).	• Bleed line. • Check gas line pressure. • Contact dealer.
Burners will not remain lit.	Problem with thermopile circuit.	• Check gas line pressure . • Check for flame impingement on thermopile. If low, see "Pilot will not remain lit". • Check thermopile for minimum of 300 mV when burner is switched on. • Check wiring to thermostat for breaks and bad connections.
Flame lifting	Leak in vent pipe	• Check for leaks in vent connections.
	Improper vent configuration	• Check vent configuration with manual.
	Terminal may be recirculating flue gases	• Check to see if terminal is on correctly. • May need to install high wind termination cap. • Contact dealer.
Glass fogs up	Normal Condition: after the appliance warms up the glass will clear. **Due to additives in gas, glass may get hazy during operation** Clean as needed.	
Blue Flames	Normal during start up: flames will yellow as the fireplace heats up.	
Flames are burning "dirty" or sooting	Flame impingement	• Increase primary air by opening the venturi shutter. See also "Burners will not remain lit."
Remote control doesn't work	Problem with the remote	• One or more of the batteries are dead. See remote control instructions.
	Problem with fireplace	• The on/off switch is turned to OFF. • The gas control valve is turned to PILOT or OFF. • The pilot has gone out.

Parts List

Reference Number	Part Description	Part Number
1	DV Flue Adaptor Bottom Gasket	50-2516
-	E33G Owner's Manual	50-2562
-	E33G Conversion Kit NG to LP	50-2515
-	E33G Conversion Kit LP to NG	50-2540
2	Door Release Tool	50-2510
3	Domestic Power Cord (115V)	EC-042
4	Heyco Strain Relief	EC-044
5	FPI Burner Switch	EC-026
6	Pilot Shield	50-2550
7	Valve Extension C/W Knob (Long)	50-2519
8	FPI Fan Controller (69.5V) 115V W/FS Knob	EC-039A
9	Fan Controller Knob W/Decal	EC-040
10	Control Panel C/W Decal	50-2521
11	S.I.T. Piezo Ignitor	EC-023
12	Control Panel Bushings (Set 2)	50-2352
13	Control Panel Knobs (Set 2)	50-2355
14	E33 Glass Burner Tube Assembly	50-3032
15	Door Complete	50-2522
16	Glass C/W Gasket (21.75" X 13.575")	50-2523
17	Dual Bulb Door Gasket (10ft)	50-634
18	Valve Extension C/W Knob (Short)	50-2520
19	Fan Only	50-2493
20	Pilot Gasket	EC-021

Parts List

Reference Number	Part Description	Part Number
21	Door Latch Mechanism (Set of 2)	50-2524
-	Porcelain Liner Set - E33G	50-2437
22	S.I.T. Nova Valve Convertible	50-1421
23	120 Ceramic Fan Temp Sensor	EC-001
-	12 oz. Can of Metallic Black Touch Up Paint	PAINT-12-MB
24	Pilot Assembly	50-2513
25	Glass Enameled Tray	50-3031
Reference Number	**Option Description**	**Part Number**
26	Regular Surround Panel	50-2428
27	Contemporary Surround Panel	50-2429
28	Extruded Surround Panel	50-2430
29	Trimmable Surround Panel	50-2432
30	Safety Screen	50-3073
31	Base Shelf	50-2434
32	Base Shelf Riser	50-2435
33	E33 Angled Flue Collar	50-2630
-	E33G/GI Rock Set	50-3033

Parts Diagram - Components

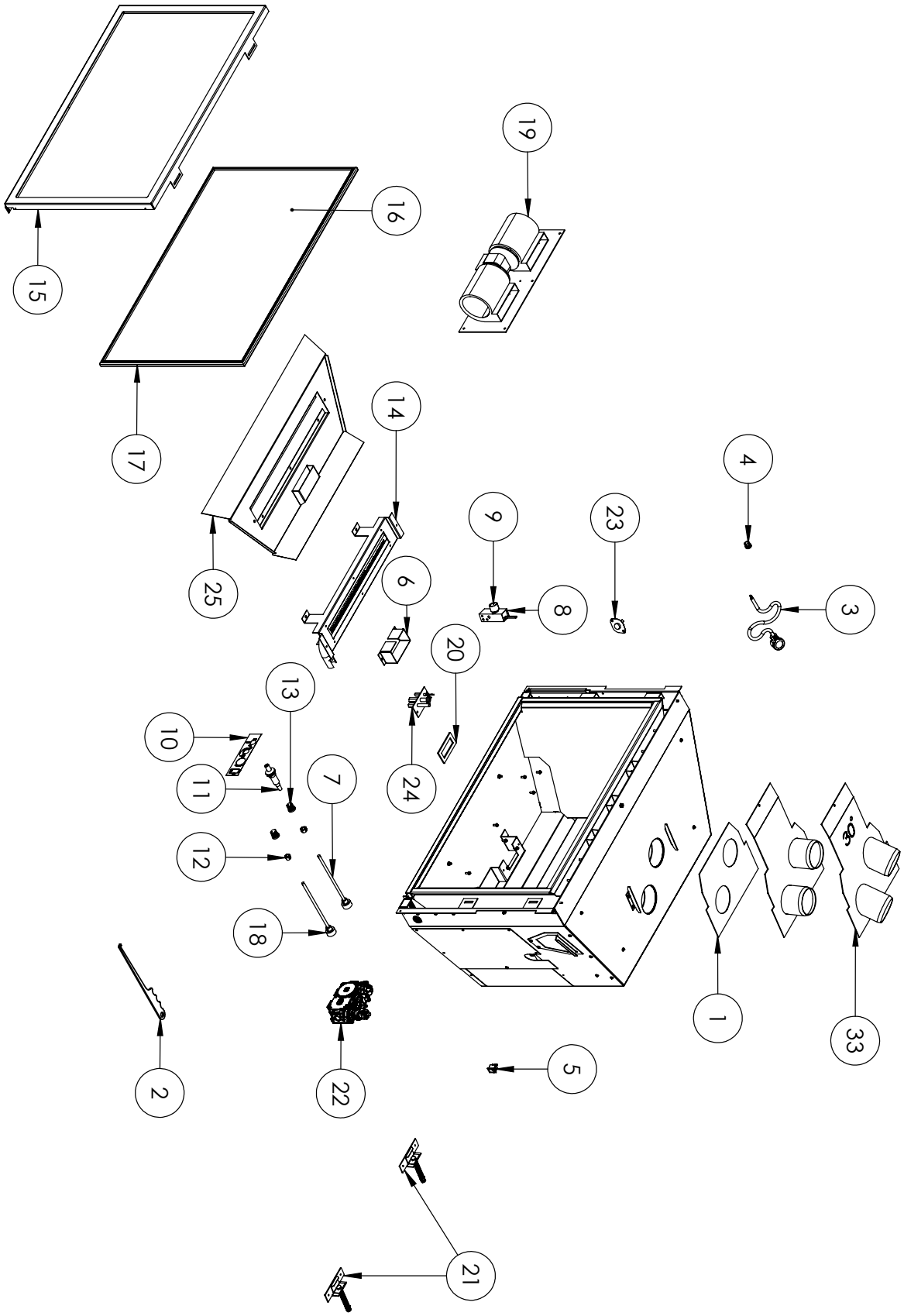

Parts Diagram - Options

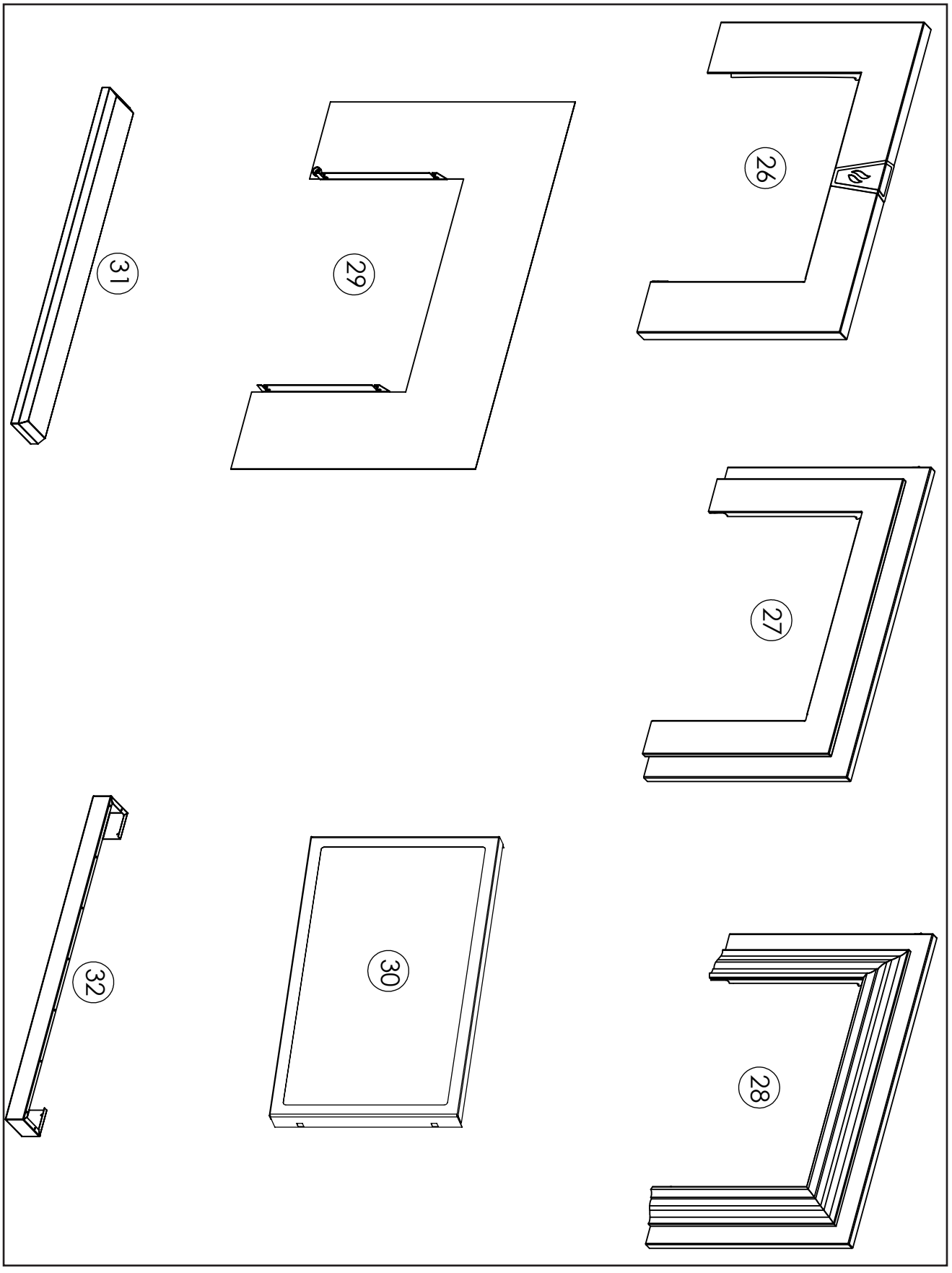

Notes

Warranty for Enviro **Gas** Products

Sherwood Industries Ltd. ("Sherwood") hereby warrants, subject to the terms and conditions herein set forth, this product against defects in material and workmanship during the specified warranty period starting from the date of original purchase at retail. In the event of a defect of material or workmanship during the specified warranty period, Sherwood reserves the right to make repairs or to assess the replacement of a defective product at Sherwood's factory. The shipping costs are to be paid by the consumer. All warranties by Sherwood are set forth herein and no claim shall be made against Sherwood on any oral warranty or representation.

Conditions

- A completed warranty registration must be submitted to Sherwood within 90 days of original purchase via the online warranty registration page or via the mail-in warranty registration card provided. Have the installer fill in the installation data sheet in the back of the manual for warranty and future reference.
- This warranty applies only to the original owner in the original location from date of install.
- The unit must have been properly installed by a qualified technician or installer, and must meet all local and national building code requirements.
- The warranty does not cover removal and re-installation costs.
- Sherwood Industries Ltd. reserves the right to make changes without notice.
- Sherwood Industries Ltd. and its employees or representatives will not assume any damages, either directly or indirectly caused by improper usage, operation, installation, servicing or maintenance of this appliance.
- A proof of original purchase must be provided by you or the dealer including serial number.
- This warranty does not cover any discoloration of the safety screen mesh.

Exclusions

An expanded list of exclusions is available at www.enviro.com/help/warranty.html

This warranty does not cover:

- Damage as a result of improper usage or abuse.
- Damage caused from over-firing due to incorrect setup or tampering.
- Damage caused by incorrect installation.

To the Dealer

- Provide name, address and telephone number of purchaser and date of purchase.
- Provide date of purchase. Name of installer and dealer. Serial number of the appliance. Nature of complaint, defects or malfunction, description and part # of any parts replaced.
- Pictures or return of damaged or defective product may be required.

To the Distributor

- Sign and verify that work and information are correct.

Sherwood Industries Ltd.
6782 Oldfield Road, Victoria, BC . Canada V8M 2A3
Online warranty registration: www.enviro.com/warranty/

Category	One Year	Two Year	Limited Lifetime (7yr)
Parts [1,2] (unit serial number required)		✔	
Firebox Liner Panels [3]		✔	
Firebox			✔
Heat Exchanger			✔
Burner			✔
Ceramic Logs [4]			✔
Ceramic Glass [5]	✔		
Pedestal / Legs (excluding finish)			✔
Door Assembly			✔
Surround Panels (excluding finish)			✔
Exterior Panels (excluding finish)			Up to 5 years
Electrical Components		✔	
Exterior Surface Finishing	✔		
Labour	✔		

[1] Whereas warranty has expired, replacement parts will be warrantied for 90 days from part purchase date. Labour not included. Unit serial number required.

[2] 50-173 Westport Fan Kit covered for up to 5 years from purchase date. Labour not included. Unit serial required.

[3] Excluding damage to the finish caused by improper setup of the appliance, or color changes.

[4] Log set and panels excludes wear and tear or breakage caused by cleaning or service.

[4] Glass is covered for thermal breakage. Photos of box, inside of door, and unit serial # must be supplied for breakage due to shipping.

[6] Exterior Surface finishing covers plating, enamel or paint and excludes colour changes, chipping, and fingerprints.

Travel costs not included.

Jan 2018

Installation Data Sheet

The following information must be recorded by the installer for warranty purposes and future reference.

NAME OF OWNER:

_____

ADDRESS:

_____

_____

_____

PHONE:_____

NAME OF DEALER:

_____

ADDRESS:

_____

_____

_____

PHONE:_____

MODEL:_____

SERIAL NUMBER:_____

DATE OF PURCHASE: _____ (dd/mm/yyyy)

DATE OF INSTALLATION:_____(dd/mm/yyyy)

☐ DIRECT VENT ☐ B-VENT

☐ NATURAL GAS (NAT) ☐ PROPANE(LPG)

INLET GAS PRESSURE:_____in WC

MAIN BURNER ORIFICE:_____# DMS

PILOT ORIFICE #_____OR_____in diam.

INSTALLER'S SIGNATURE:

_____

NAME OF INSTALLER:

_____

ADDRESS:

_____

_____

_____

PHONE:_____

MANUFACTURED BY:
SHERWOOD INDUSTRIES LTD.
6782 OLDFIELD RD. SAANICHTON, BC, CANADA V8M 2A3
www.enviro.com
November 21, 2016
C-14471