WARRANTY REGISTRATION
enviro.com/warranty

Enviro®

# S20

## FREESTANDING GAS FIREPLACE

# OWNER'S MANUAL



C ETL US LISTED
Intertek
4001609

**WARNING: If the information in this manual is not followed exactly, a fire or explosion may result causing property damage, personal injury or loss of life. Installation and service must be performed by a qualified installer, service agency or the gas supplier.**

Fr Version Française: www.enviro.com/fr.html

**50-3220**

# Safety Precautions

**WARNING:**

**FIRE OR EXPLOSION HAZARD**

**Failure to follow safety warnings exactly could result in serious injury, death, or property damage.**

**- Do not store or use gasoline or other flammable vapors and liquids in the vicinity of this or any other appliance.**

**- WHAT TO DO IF YOU SMELL GAS**

- **Do not try to light any appliance.**
- **Do not touch any electrical switch; do not use any phone in your building.**
- **Leave the building immeadiately.**
- **Immeadiately call your gas supplier from a neighbor's phone. Follow the gas supplier's instructions.**
- **If you cannot reach your gas supplier, call the fire department.**

**- Installation and service must be performed by a qualified installer, service agency or the gas supplier.**

**INSTALLER:**
Leave this manual with the appliance.

**CONSUMER:**
Retain this manual for future reference.

This appliance may be installed in an after-market permanently located, manufactured (mobile) home, where not prohibited by local codes.

This appliance is only for use with the type of gas indicated on the rating plate. This appliance is not convertible for use with other gases, unless a certified kit is used.

Massachusetts installations (Warning): This product must be installed by a licensed plumber or gas fitter when installed within the Commonwealth of Massachusetts. Other Massachusetts code requirements: Flexible connector must not be longer than 36in., a shut off valve must be installed; only direct vent sealed combustion products are approved for bedrooms/bathrooms. A carbon monoxide detector is required in all rooms containing gas fired direct vent appliances. The fireplace damper must be removed or welded in the open position prior to installation of a fireplace insert.

# Safety Precautions

## FOR SAFE INSTALLATION AND OPERATION OF YOUR "ENVIRO" HEATER, PLEASE CAREFULLY READ THE FOLLOWING INFORMATION:

• All ENVIRO gas-fired appliances must be installed in accordance with their instructions. Carefully read all the instructions in this manual first. Consult the building authority having jurisdiction to determine the need for a permit prior to commencing the installation.

• **NOTE:** Failure to follow these instructions could cause a malfunction of the fireplace, which could result in death, serious bodily injury, and/or property damage.

• Failure to follow these instructions may also void your fire insurance and/or warranty.

**GENERAL**

• Installation and repair should be done by a qualified service person. The appliance should be inspected before the first use and, at least, annually by a qualified service person. More frequent cleaning may be required due to excessive lint from carpeting, bedding material, etc. It is imperative the control compartments, burners and circulating air passageways of the appliance be kept clean.

• Due to high temperatures, the appliance should be located out of high traffic areas and away from furniture and draperies.

**Children and adults should be alerted to the hazards of high surface temperatures and should stay away to avoid burn or clothing ignition.**

• Young children should be carefully supervised when in the same room as the appliance. Toddlers, young children and others may be susceptible to accidental contact burns. A physical barrier is required if there are at risk individuals in the house. To restrict access to a fireplace or stove install an adjustable safety gate to keep toddlers, young children and other at risk individuals out of the room and away from hot surfaces. Any safety screen, guard, or barrier removed for servicing an appliance must be replaced prior to operating the appliance.

• Clothing or other flammable materials should not be placed on or near the appliance.

**DANGER**



**HOT GLASS** WILL CAUSE BURNS

**DO NOT TOUCH** GLASS UNTIL COOLED.

**NEVER** ALLOW CHILDREN TO TOUCH GLASS.

A barrier designed to reduce the risk of burns from the hot viewing glass is provided with this appliance and shall be installed for the protection of children and other at-risk individuals.

• A barrier designed to reduce the risk of burns from the hot veiwing glass is provided with this appliance and shall be installed for the protection of children and other at-risk individuals. If the barrier becomes damaged, the barrier shall be replaced with the manufacturer's barrier for this appliance

**FOR YOUR SAFETY**

• Installation and service must be performed by a qualified installer, service agency or gas supplier.

• This installation must conform to local codes or, in the absence of local codes, with the National Fuel Gas Code, ANSI Z223.1/NFPA 54, or the Natural Gas and Propane Installation Code, CSA B149.1.

• To prevent injury, do not allow anyone who is unfamiliar with the stove to operate it.

**• To prevent injury, if the pilot or pilot and burners have gone out on their own, open the glass door and wait 5 minutes to air out before attempting to re-light the stove.**

• Always keep the area around these appliances clear of combustible material, gasoline and other flammable liquids and vapours.

• These appliances should not be used as a drying rack for clothing or for hanging Christmas stockings/decorations.

• Due to the paint curing on the stove, a faint odor and slight smoking will likely be noticed when the stove is first used. Open a window until the smoking stops.

Always connect this gas stove to a vent system and vent to the outside of the building envelope. Never vent to another room or inside the building. Make sure the specified vent pipe is used, properly sized and of adequate height to provide sufficient draft. Inspect the venting system annually for blockage and signs of deterioration.

**WARNING:** Failure to position the parts in accordance with the diagrams in this booklet, or failure to use only parts specifically approved with this appliance, may result in property damage or personal injury.

**WARNING:** Do not operate with the glass front removed, cracked or broken. Replacement of the glass should be done by a licensed or qualified service person.

• Never use solid fuels such as wood, paper, cardboard, coal, or any flammable liquids, etc., in this appliance.

• Do not use this appliance if any part has been under water. Immediately call a qualified service technician to inspect the appliance and to replace any part of the control system or any gas control which has been under water.

• Do not abuse the glass by striking it or slamming the door shut.

• If the S20L unit is pulled out of its installation, and the vent-air intake system is disconnected for any reason, ensure that the vent-air intake pipes are reconnected and re-sealed in accordance to the instructions noted in Initial Installation - Direct Vent

# Table of Contents


Safety Precautions....2
Table of Contents....4
Codes And Approvals....5
Specifications....6
- Dimensions....6
- Rating Label Location....6

Operating Instructions....7
- Lighting Instructions....7
- Pilot Light....8
- Air Shutter....8
- Remote Controls....8
- Burner Lighting....9
- Blower Speed ....10
- Normal Sounds During Operation....10

Maintenance And Service....10
- Routine Maintenance....10
- Cleaning Decorative Surfaces....10
- Cleaning the Glass....11
- Cleaning the Firebox....11
- Replacing the Glass....11
- Cast Door Removal....12
- Glass Door Removal....12
- Burner Removal....13
- Fuel Conversion....13

Initial Installation....16
- Introduction....16
- Preparation for Installation....16
- Clearance to Combustibles....16
- Rear Vent Conversion....17
- Direct Vent....19
- Venting Clearances....19
- Approved Venting Parts....19
- Horizontal Termination - Rear Vent w/ No Rise....21
- Mobile Home Installation....22
- Vent Termination Restrictions....23
- Allowable Vent Configurations....24
- Air Restrictor Settings....25
- Horizontal Termination....26
- Vertical Termination ....27
- Gas Line Connection and Testing....30
- Electrical Requirements ....31

Secondary Installation....32
- Fire Grate and Log Set Installation....32
- Safety Screen Replacement....35

Trouble Shooting....36
Parts List....37
Parts Diagram....38
Rating Label....39
Notes....40
Warranty....42
Installation Data Sheet....43

# Codes And Approvals

**DIRECT VENT ONLY:** This type is identified by the suffix DV. This appliance draws all of its air for combustion from outside the dwelling, through a specially designed vent pipe system.

This appliance has been tested and approved for installations from 0 feet to 4500 feet (1372 m) above sea level.

**In the USA:** The appliance may be installed at higher altitudes. Please refer to your American Gas Association guidelines which state: the sea level rated input of Gas Designed Appliances installed at elevations above 2000 (610 m) feet is to be reduced 4% for each 1000 feet (305 m) above sea level. Refer also to local authorities or codes which have jurisdiction in your area regarding the de-rate guidelines.

**In Canada**: When the appliance is installed at elevations above 4500 feet (1372 m), the certified high altitude rating shall be reduced at the rate of 4% for each additional 1000 feet (305 m).

- This appliance has been tested by INTERTEK and found to comply with the established VENTED GAS FIREPLACE HEATER standards in CANADA and the USA as follows:

**VENTED GAS FIREPLACE HEATER (S20; NG/LPG)**

TESTED TO: ANSI Z21.88-2014/CSA 2.33-2014 VENTED GAS FIREPLACE HEATERS

CAN/CGA 2.17-M91 (R2014) GAS FIRED APPLIANCES FOR HIGH ALTITUDES

CSA P.4.1-02 TESTING METHOD FOR MEASURING ANNUAL FIREPLACE EFFICIENCY

**This ENVIRO S20 Fireplace:**

- Has been certified for use with either natural or propane gases. (See rating label.)
- Is not for use with solid fuels.
- Is approved for bedroom or bed sitting room. (**IN CANADA**: must be installed with a listed wall thermostat. **IN USA**: see current ANSI Z223.1 for installation instructions.)
- Must be installed in accordance with local codes. If none exist, use current installation code CAN/CGA B149 in Canada or ANSI Z223.1/NFPA 54 in the USA.
- Must be properly connected to an approved venting system and not connected to a chimney flue serving a separate solid-fuel burning appliance.

**IMPORTANT NOTICE (Regarding first fire up):** When the unit is turned on for the first time, it should be turned onto high without the fan on for the first 4 hours. This will cure the paint, logs, gasket material and other products used in the manufacturing process. It is advisable to open a window or door, as the unit will start to smoke and can irritate some people. After the unit has gone through the first burn, turn the unit off including the pilot, let the unit get cold then remove the glass door and clean it with a good gas fireplace glass cleaner, available at your local ENVIRO dealer.

NATIONAL FIREPLACE INSTITUTE®

NFI

CERTIFIED

**www.nficertified.org**

We recommend that our gas hearth products be installed and serviced by professionals who are certified in the U.S. by the National Fireplace Institute® (NFI) as NFI Gas Specialists.

# Specifications

## Dimensions:

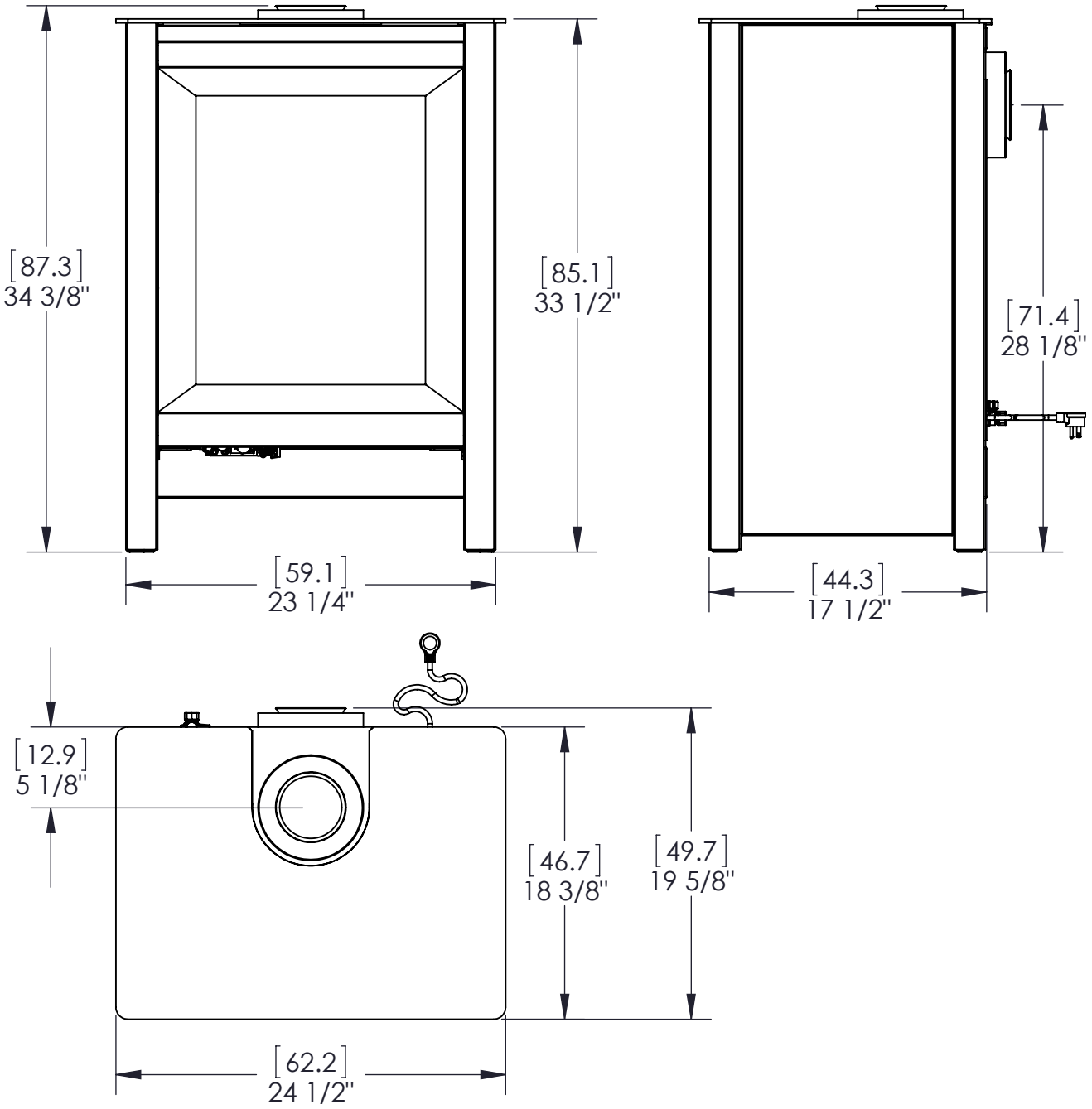


## Rating Label & Lighting Instructions Location:

The rating label and lighting instructions are located on the backside of the Stove (Figure 6).

# Operating Instructions

## For Your Safety, Read Safety Precautions And Lighting Instructions Before Operating

**WARNING: IF YOU DO NOT FOLLOW THESE INSTRUCTIONS EXACTLY A FIRE OR EXPLOSION MAY RESULT, CAUSING PROPERTY DAMAGE, PERSONAL INJURY OF LOSS OF LIFE.**

## Lighting and Turning Off Instructions:

### FOR YOUR SAFETY READ BEFORE LIGHTING

**WARNING**:If you do not follow these instructions exactly, a fire or explosion may result causing property damage, personal injury or loss of life

A. This appliance has a pilot which must be lighted by hand. When lighting the pilot, follow these instructions exactly.

B. BEFORE LIGHTING smell all around the appliance area for gas. Be sure to smell next to the floor because some gas is heavier than air and will settle on the floor.

WHAT TO DO IF YOU SMELL GAS:

Do not try to light any appliance. Do not touch any electrical switch; do not use any phone in your building. Immediately call your gas supplier from a neighbor's phone. Follow the gas supplier's instructions. If you cannot reach your gas supplier, call the fire department.

C. Use only your hand to push in or turn the gas control knob. Never use tools. If the knob will not push in or turn by hand, don't try to repair it. Call a qualified service technician. Force or attempted repair may result in a fire or explosion.

D. Do not use this appliance if any part has been under water. Immediately call a qualified service technician to inspect the appliance and to replace any part of the control system and any gas control which has been under water.

### LIGHTING INSTRUCTIONS

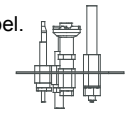

1. STOP! Read the safety information above on this label.
2. Set the thermostat to the lowest setting.
3. Turn off all electric power to this appliance.
4. Open the front control panel.
5. Turn off the gas control knob clockwise ↷ to the "OFF" position.
6. Open door. Wait flve (5) minutes to clear out any gas. Close door. Then smell for gas, including near the floor. If you smell gas, STOP! Follow "B" in the saftey information above on this label. If you don't smell gas, go to the next step.
7. Find pilot-located near the center rear of the firebox. Turn the gas control knob counter-clockwise ↶ to "PILOT". Push the gas control in fully and hold, keep knob depressed for about 30 seconds after the pilot is lit. Release knob. If pilot goes out, repeat steps 4 through 5.

**WARNING**: This gas valve has a lockout device, which will not allow the pilot burner to be relit until the thermocouple has cooled.

-If the knob does not pop up when released, stop and immediately call your service technician or gas supplier.

-If the pilot will not stay lit after several tries, turn the gas control knob clockwise ↷ to "OFF" and call your service technician or gas supplier.

8. Turn the gas control knob counter clockwise ↶ to the "ON" position. Flip the burner switch to "ON" then turn the "HI/LOW" knob to the desired setting.
9. Close the front control panel.
10. Turn on all electric power to the appliance.
11. Set thermostat to desired setting.

### TO TURN OFF GAS TO APPLIANCE

1. Set the thermostat to the lowest setting.
2. Turn off all electric power to the appliance if service is to be performed.
3. Open the front control panel and flip burner switch to "OFF"
4. Turn the gas control knob clockwise ↷ to the "OFF" position.
5. Close the front control panel.

C-12454

**Figure 2. Lighting Instruction Label**

# Operating Instructions

## Pilot Light:

1. Turn off the gas to the fireplace. **If not recently done, remove the glass and let the unit air out for at least five (5) minutes to clear out any gas.** Turn on gas to the appliance.
2. Start the pilot by pressing the gas control knob (Figure 5) and turning it to PILOT (counter clockwise). You will feel the knob depress in PLILOT. While holding the gas control knob in, press the piezo ignitor several times until the pilot light starts. Hold the gas control knob in for 30 seconds, the pilot should now stay lit with out depressing it. Check that the pilot has fully engulfed the thermocouple assembly (see Figure 3).

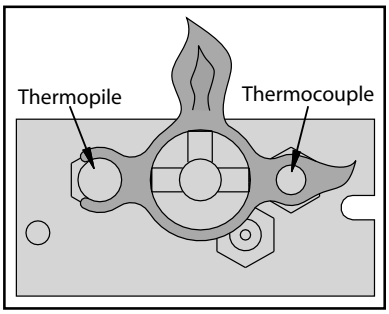


**Figure 3. Pilot Flame**

## Air Shutter:

The air shutter adjustment lever is located on the right hand side of the venturi box (see Figure 4) . To adjust the air shutter reach through the rectangle shown in the cabinet bottom. The air shutter allows the amount of air coming into the fireplace to be adjusted in order to accommodate different climates and venting arrangements. Start the pilot and then the burner. Make sure the pilot flame is burning normally and none of the burner ports are plugged. Let the fireplace burn for roughly fifteen minutes and then examine the flames, compare the flames to Figure 41.

The ideal flame will be blue at the base and light orange above. The flames should be of medium height. If the flames look like this, no venturi adjustment is needed. If the flames are fairly short and mostly blue,

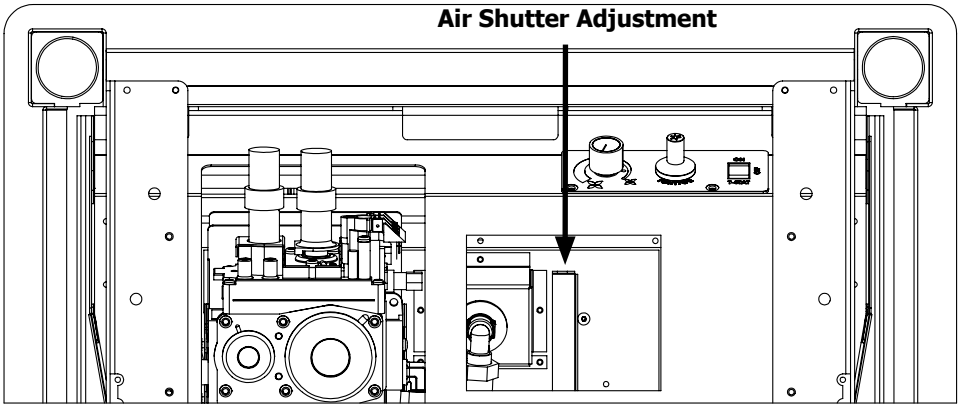


**Figure 4. Air shutter adjustment lever.**

the fireplace is getting too much air. Therefore, the air shutter should be closed (**pulled out**) slightly until the correct flames are achieved. Flames that are very orange, with tall, dark, stringy tips, are not getting enough air. Open (**push in**) the venturi until the flames clean up. If the venturi is opened, or closed all the way, and the correct flames cannot be attained, see page 25 for the restrictor adjustment. If issues persist turn off the gas and contact the dealer.

**Warning:** Incorrect shutter adjustment may lead to improper combustion, which is a safety hazard. Contact the dealer if there is any concern about the venturi adjustment.

## Remote controls:

This fireplace can use an optional remote control or wall thermostat. If either of these are to be used to control the fireplace for the majority of the time, leave the burner switch (Figure 7) in the remote/ thermostat position. Consult the instructions included with the remote/wall thermostat for operation guidelines.

# Operating Instructions

## For Your Safety, Read Safety Precautions And Lighting Instructions Before Operating

### Burner Lighting:

The S20 controls (Figure 5) is located at the front of the unit (Figure 4). For easier access to controls the face can be removed. To light the burner correctly follow the steps below:

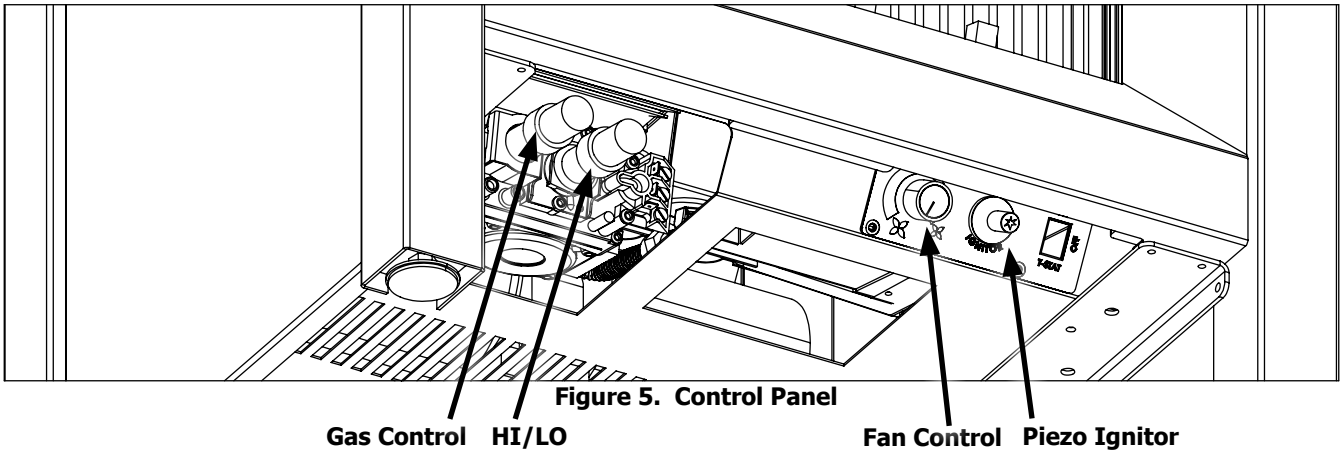


**Figure 5. Control Panel**

A) Make sure the pilot is lit (see Pilot Light section) .
B) Turn gas control knob counter clockwise to ON.
C) Flip the burner switch, located at the top right rear of the S20, to ON (see Figure 6).
D) Turn the HI/LO knob to the desired flame height.
E) Turn on all electrical power to the unit.

**NOTE:** Check that all burner holes are lit.

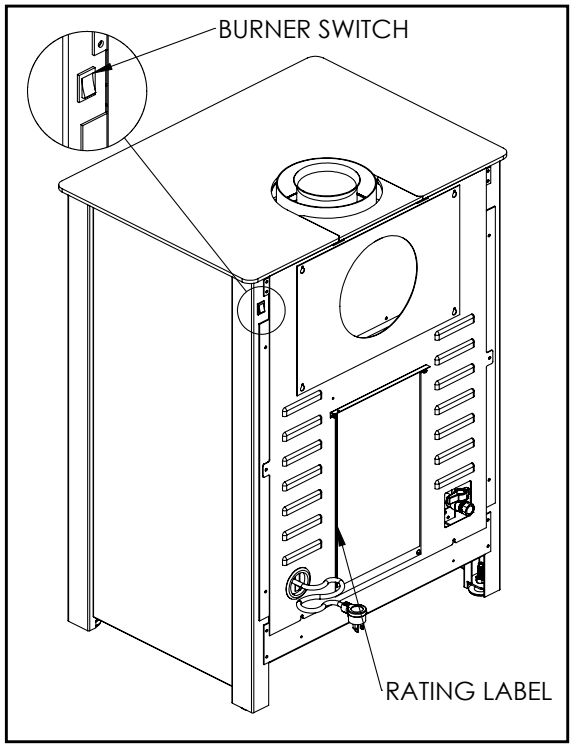


**Figure 6. Burner Switch and Rating Plate**

**TO TURN GAS FIREPLACE OFF:**

Flip switch to OFF to turn off burners only.

If the fireplace is to be turned off for the season, or for servicing, turn the gas control to off then close the shut off valve located the back of the unit. DO NOT FORCE IT. If the unit is going to be serviced, unplug the power cord.

**NOTE:** When the unit is turned on for the first time, it should be turned onto high, with the fan OFF, for the first two to four hours. This will cure the paint, logs, gasket material, and other products used in the manufacturing process. It is advised that a door or window be opened as the unit will start to smoke, which can irritate some people. After the unit has gone through the first burn, turn the unit OFF, including the pilot, and let the unit get completely cold. Then remove the glass and clean it with a good gas fireplace glass cleaner, available at your local Enviro dealer. See "Maintenance And Service; Glass Door Removal" and "Maintenance And Service; Cleaning The Glass."

# Operating Instructions

### Blower speed:

The blower will come on only when the fireplace is up to temperature (approximately 15 minutes). The speed of the fan can be changed by turning the fan control knob. The blower will continue to operate automatically after the unit has been shut off (approximately 25 minutes).To turn the blower off, turn the fan control knob COUNTER CLOCKWISE until it "clicks" off (Figure 5).

It is advisable not to operate the blower below 1/3 speed as it puts a strain on the windings of the blower and running the blower at lower speeds could also cause premature fan failure.

### Normal Sounds During Operation:

**Table 1: Normal Sounds**

| Component | Sound & Reason |
|---|---|
| S20 | Creaking when heating up or cooling down. |
| Burner | Light pop or poof when turned off; this is more common with LP units. |
| Temperature Sensor | Clinking when it senses to turn the blower on or off. |
| Pilot Flame | Quiet whisper while the pilot flame in on. |
| Blower / Fan | Air movement that increases and decreases with the speed of the blower. The blower is pushing the heat from the fireplace into the room. |
| Gas Control Valve | Dull click when turning on or off, this is the valve opening and closing. |

# Maintenance And Service

### Routine Maintenance:

At least once a year, run through the following procedures to ensure the system is clean and working properly. Check the burner to see if all the ports are clear and clean. Check the pilot to make sure it is not blocked by anything. The pilot flame should be blue with little or no yellow on the tips.

**Warning:** Clearances must be sufficient to allow access for maintenance and service

**Warning:** Failure to position the parts in accordance with this manual, or failure to use only parts specifically approved with this appliance may result in property damage or personal injury.

The venting system must be periodically examined; it is recommended the examination is done by a qualified agency.

### Cleaning Decorative Surfaces:

Painted, powder coated, or porcelain enameled surfaces should be wiped with a damp cloth periodically. Never clean the face when it is hot. Do not use other cleaners as they may leave a residue, which can become permanently etched into the surface.

# Maintenance And Service

## Cleaning The Glass:

**When the fireplace has cooled**, remove the face of the fireplace along with the door. See Maintenance And Service - Door Removal. Check the gasket material on the back of the glass, making sure that it is attached and intact.

During a cold start up, condensation will sometimes form on the glass. This is a normal condition with all fireplaces. However, this condensation can allow dust and lint to cling to the glass surface. Initial paint curing of the appliance can leave a slight film behind the glass, a temporary problem. The glass will need cleaning about two weeks after installation. **Use a mild glass cleaner and a soft cloth**. **Abrasive cleaners will damage the glass and painted surfaces.** Depending on the amount of use, the glass should require cleaning no more than two or three times a season. **Do not clean the glass when it is hot.**

## Cleaning The Firebox:

Remove the logs carefully, as they are very fragile. Gently remove all the coals and place on a paper towel. Vacuum the bottom of the firebox thoroughly. Carefully clean any dust off the logs and remove any lint from the burner and pilot. At this time, inspect the burner tube for cracking or severe warping. If a problem is suspected, contact the dealer. Check the logs for deterioration or large amounts of soot; a small amount on the bottom side of the logs is normal. Replace the logs and coals as in the Secondary Installation - Fire Grate and Log Set Installation section. If new/more coals are required, contact your nearest ENVIRO dealer.

## Replacing the Glass:

The glass in the fireplace is a high temperature ceramic. If the glass is damaged in any way, a factory replacement is required (see Parts List). Wear gloves when handling damaged glass door assembly to prevent personal injury. Do not operate with the glass front removed, cracked or broken. Removal and replacement of the glass from the door **must** be done by a licensed or qualified service person. **The glass must be purchased from an ENVIRO dealer. No substitute materials are allowed.** Remove the door (see page 12). The replacement glass will come with a new gasket installed. Remove any silicone remnants from the door. Apply high temperature silicone to the two vertical faces of the door and install the new piece of glass with gasket (be sure to maintain edge clearances). Apply even pressure to the glass to allow the silicone to adhere to the gasket material.

# Maintenance And Service

## Face Removal:

The Face on the S20 needs to be removed whenever access to the firebox is required. To remove loosen two screws at the bottom of the face, then face rotate the door as shown in Figure 7. The face is hooked on the frame at the top and will need to be rotated past 45 degrees until is is free. Lay the Face down on a towel or blanket to prevent scratching the finish. To re-install simply reverse the procedure.

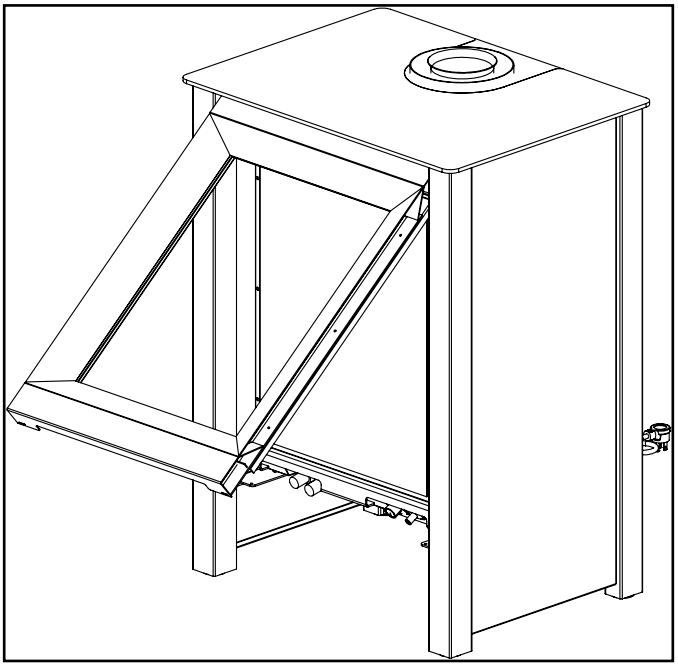

**Figure 7. Face Removal**

## Glass Door Removal:

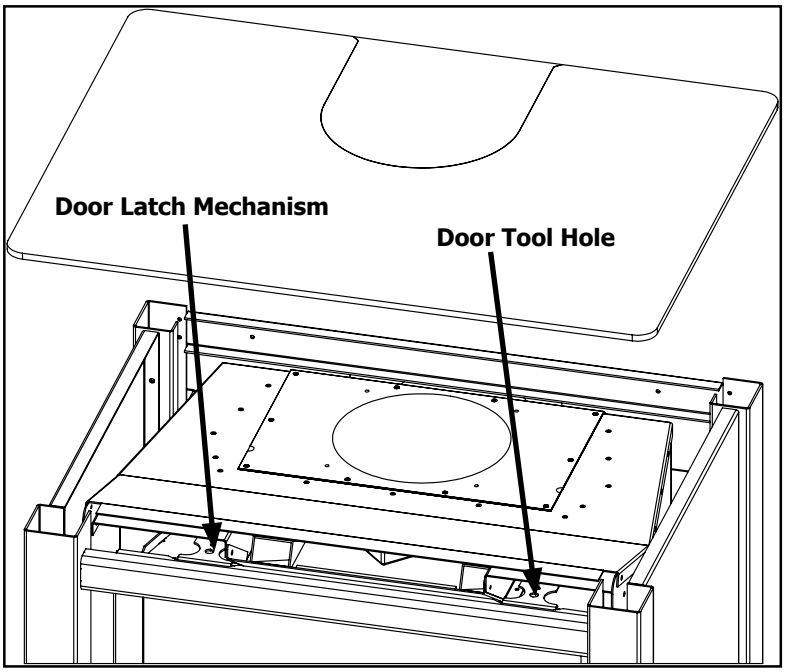


**Figure 8. Top latches for glass door (louvers removed)**

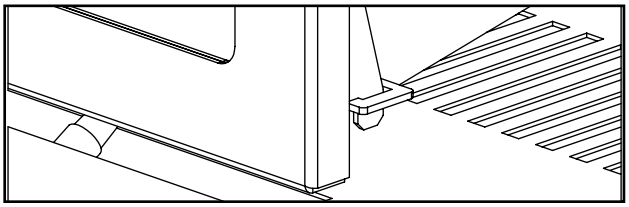

**Figure 9. Bottom Alignment Slots for door.**

In order to install the log set, and for regular cleaning, the glass door must be removed. The Face must first be removed, as outlined in the section above, before accessing the door latches. There are two (2) door latch mechanisms on top the glass door as shown in Figure 8. Each latch has a hole at the front to use the door tool, supplied with the unit, to pull the mechanisms straight out and up. When the top latches are unhooked, lean the door forward and then lift it up out of the alignment slots at the bottom corners of the firebox.

To replace the glass door, simply reverse the above procedure.

**Warning:** Do not touch or attempt to remove the glass door if the fireplace is not completely cold.

**WARNING: Never operate the fireplace with the glass door removed.**

# Maintenance And Service

## Burner Removal:

The burner may need to be removed for a few reasons, including cleaning under the burner, converting the unit to a different gas type, or to replace the burner altogether. **Proceed only when the unit has completely cooled down.**

1. Remov the Face and Door as outlined in the Maintenance and Service - Door Removal.
2. Remove the log set and fire grate as shown in Secondary Installation - Fire Grate and Log Set Installaion
3. Push the air shutter in until it stops
4. Lift the burner straight up then out.

To re-install the burner follow steps 1-4 in reverse. When placing the burner back in the unit be sure to adjust the air shutter back to the correct setting.

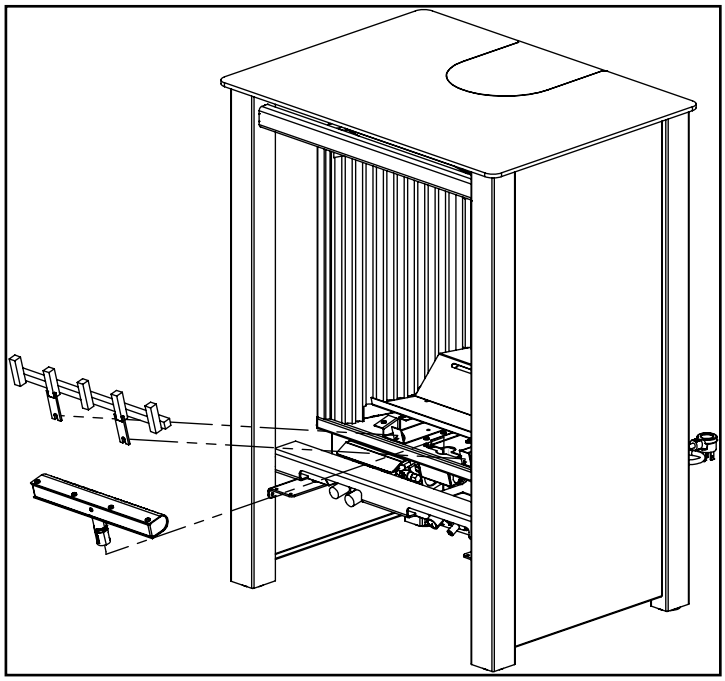

**Figure 10. Removing Burner.**

## Fuel Conversion:

### TO BE INSTALLED BY A QUALIFIED SERVICE AGENCY ONLY

**Please read and understand these instructions before installing.**

**Warning: This conversion kit shall be installed by a qualified service agency in accordance with the manufacturer's instructions and all applicable codes and requirements of the authority having jurisdiction. If the information in these instructions is not followed exactly, a fire, explosion or production of carbon monoxide may result causing property damage, personal injury or loss of life. The qualified service agency is responsible for the proper installation of this kit. The installation is not proper or complete until the operation of the converted appliance is checked as specified in the manufacturer's instructions supplied with the kit.**

**Kit Parts List for all S20 standing pilot models:**

1 - Orifice (NG - #46 DMS or LP - 1.2 mm)
1 - Pilot Injector (NG 0.62 mm; LP 0.35 mm)
1 - Installation instruction sheet
1 - Conversion label

Carefully inspect all parts supplied with this conversion kit. If any parts have been damaged or are missing, contact your dealer, distributor or courier company to have them replaced before starting this installation.

**Conversion Kit Installation:**

1. Turn control knob on the gas valve to the "OFF" position and shut the gas supply off at the shut-off valve upstream of the unit. CAUTION: The gas supply must be shut off prior to disconnecting the electrical power and before proceeding with the conversion. Allow the valve and unit to cool down to room temperature.
2. Remove the glass door as shown in the Maintenance and Service - Glass Door Removal.
3. Carefully remove the log set and fire grate.
4. Remove the burner as shown in the Maintenance and Service - Burner Removal.
5. Convert the burner orifice(s):
   a) Remove the main burner orifice with a ½ inch deep socket.
   b) Put a bead of pipe-thread sealant or approved Teflon tape on the orifice threads before installing into the brass elbow.
   c) Install the new orifice(s) from the kit into the brass elbow.
6. Convert the pilot injector:
   a) Pull the pilot hood straight up to access the pilot injector.
   b) Using a 5/32" or 4 mm Allen key, remove the pilot injector.
   c) Install the new pilot injector supplied with this conversion kit. Simply screw the new injector inside the pilot hood using the Allen key,
   d) Reinstall the hood by placing the hood on the assembly, line up the key way, and snap into place.
7. Convert the SIT gas valve:

a) Remove the black protection cap from the HI/LO knob by hand shown in Figure 11.

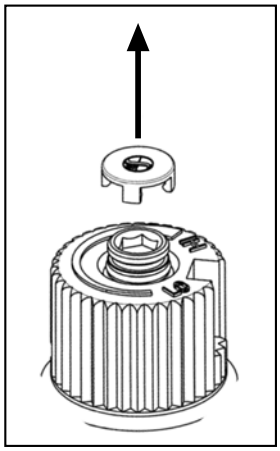

**Figure 11: Removing valve cap.**

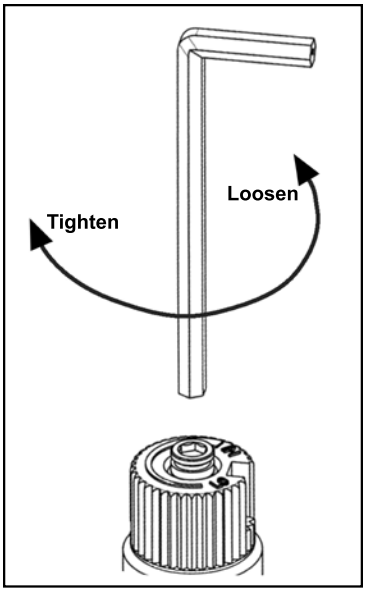


**Figure 12: Removing valve screw.**

b) Insert a 5/32" or 4 mm Allen wrench into the hexagonal key-way of the screw (see Figure 12), rotate it counter-clockwise until it is free and extract it.

c) Check that the screw is clean and if necessary remove dirt.

d) Flip the screw (refer to Figure 13).

e) Using the Allen wrench as shown in Figure 12, rotate the screw clockwise until a torque of 9 inch lbs. **WARNING!** Do not over tighten the screw. It is recommended that you grip the wrench by the short side.

f) Verify that if the conversion is from NG to LPG, the screw must be re-assembled with the red o-ring visible (refer to Figure 14). If the conversion is from LPG to NG, the red o-ring of the screw must be not visible.

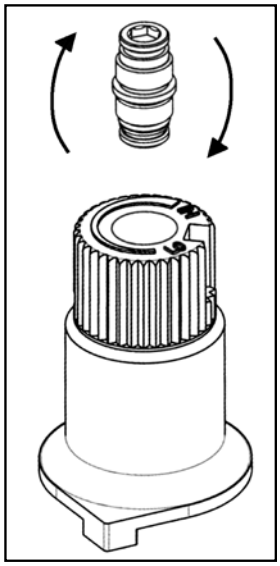

**Figure 13: Flip valve screw.**

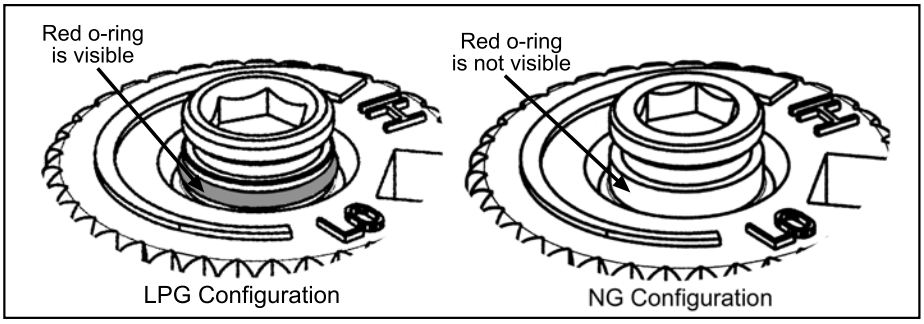


**Figure 14: O-ring on valve screw.**

g) Re-attach the black protection cap that was removed in step a (Figure 11).

8. Reinstall the burner, fire grate, log set, and door. Also refer to Secondary Installation - Fire Grate and Log Set Installation in your Owner's Manual. When re-installing the burner, ensure that the burner to pilot hood and shield relationship is similar to what is shown in Figure 15.
9. Reconnect the main gas line if it was disconnected and open the shut-off valve at the gas line to the unit.
10. Use a small brush to apply a warm soapy water solution to all gas connections (use a half dish soap and half warm water). If a gas leak is present, bubbling will occur. Gas leaks can be repaired by using an approved pipe thread sealant or approved Teflon tape. NEVER USE AN OPEN FLAME WHEN TESTING FOR LEAKS.

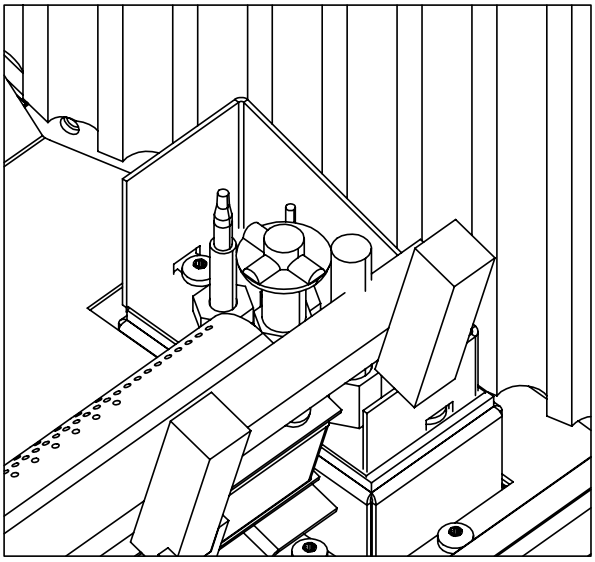

**Figure 15. Pilot assembly beside the burner.**

11. Reconnect the electrical power to the unit.
12. Relight the pilot and confirm the flame properly covers both the thermocouple and thermopile (see Figure 4, page 8). Should the pilot require adjustment, turn the adjustment screw (figure 49, page 37) clockwise to decrease or counterclockwise to increase until the correct flame is achieved.
13. Relight the main burner in both the "HI" and "LO" positions to verify proper burner ignition, operation and proper flame appearance (figure 58, page 41). Confirm the inlet and manifold pressures are within the acceptable ranges as directed in section Intial Intallation - Gas Line Connection and Testing. If the S20 has been installed at an altitude higher than 2000ft (610m) it is required to de-rate the unit accordingly:

    **In the USA:** The appliance may be installed at higher altitudes. Please refer to your American Gas Association guidelines which state: the sea level rated input of Gas Designed Appliances installed at elevations above 2000 (610 m) feet is to be reduced 4% for each 1000 feet (305 m) above sea level. Refer also to local authorities or codes which have jurisdiction in your area regarding the de-rate guidelines.

    **In Canada**: When the appliance is installed at elevations above 4500 feet (1372 m), the certified high altitude rating shall be reduced at the rate of 4% for each additional 1000 feet (305 m).

14. MAKE SURE that the conversion label is installed on or close to the rating label to signify that the unit has been converted to a different fuel type.

# Initial Installation

## QUALIFIED INSTALLERS ONLY

### Introduction:

This section of the owner's manual is for the use of qualified technicians only. Fireplace placement, hearths, and venting terminations will be covered, as well as the gas and electrical systems. There are several installation safety guidelines that must be adhered to. Please carefully read the safety precautions at the front of this manual.

NOTE: The S20 comes as a top vent unit but can be converted to a rear vent.

### Preparation for Installation:

- Remove the packaging from the appliance, and check to make sure there is no damage. If damage is found, please report it to both the carrier and your dealer as soon as possible.
- Before beginning, carefully check the glass door and the log set
- Locate a position where the flue system of the stove can be properly installed without damaging the integrity of the building; e.g. cutting a wall or ceiling joist.
- Check stove and flue system clearance requirements.
- Locate the stove where it can be accessed by a gas supply line.
- Locate the stove in a large and open room that is centrally located in the house. This will optimize heat circulation and comfort.
- As the S20 is equipped with a convection fan, ensure that an electrical outlet is within 6 ft (1.8 m) of the stove.
- The flow of combustion and ventilation air must not be obstructed.

### Clearance to Combustibles:

**Warning:** Clearances must be sufficient to allow access for maintenance and service.

A. Sidewall to unit 8.0" (27.3 cm)

B. Backwall to unit 4.0" (10.2 cm)

C. Corner to unit 7.5" (19.0 cm)

D. Ceiling to unit 12.0" (30.5 cm)

E. Floor (hard wood & linoleum) 0"

Note: When installing on a carpeted surface a hearth pad must be used.

#### Minimum Alcove Dimensions:

| | |
|---|---|
| Width | 39.25" (106.7 cm) |
| Height | 45.5" (121.9 cm) |
| Depth (Max.) | 30.0" (91.4 cm) |

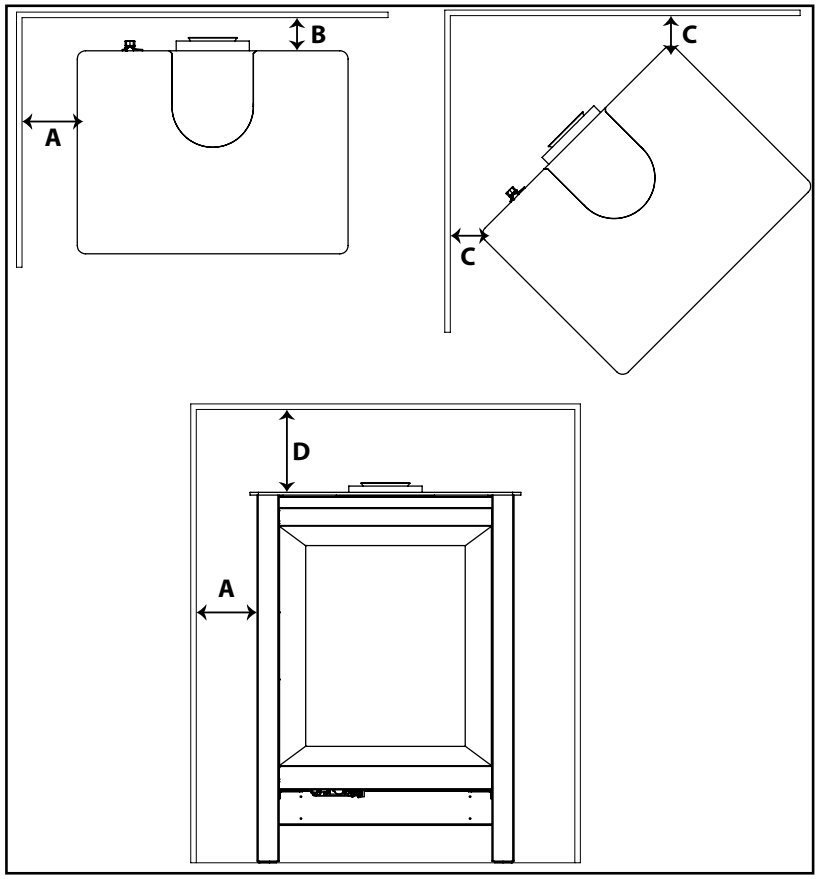


**Figure 16. Clearance to Combustibles**

## QUALIFIED INSTALLERS ONLY

### Rear Vent Conversion:

If desired, the S20 can be converted from a top vent to a rear vent unit by following the steps below.

**Note:** When converted to rear vent the S20 has a smaller range of allowable venting, refer to Initial Installation - Allowable Venting Configurations before final installation.

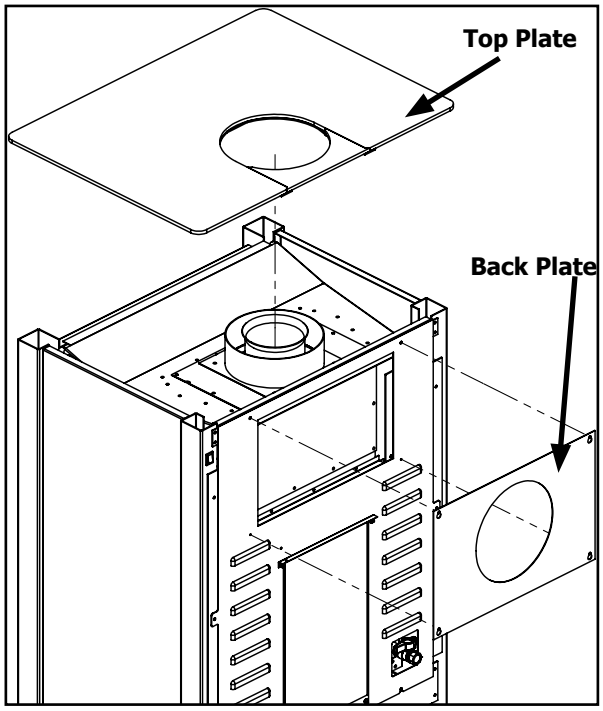


**Figure 17. Vent Conversion - Step 1**

**Step 1:** Using a T20 screwdriver loosen the four screws retaining the back plate and unhook it. Then remove the Top Plate by simply lifting up as shown in Figure 17.

**Step 2:** Next, remove the vent collar, base plate, cover plate and exhaust spigot (28 screws total) as shown in Figure 18.

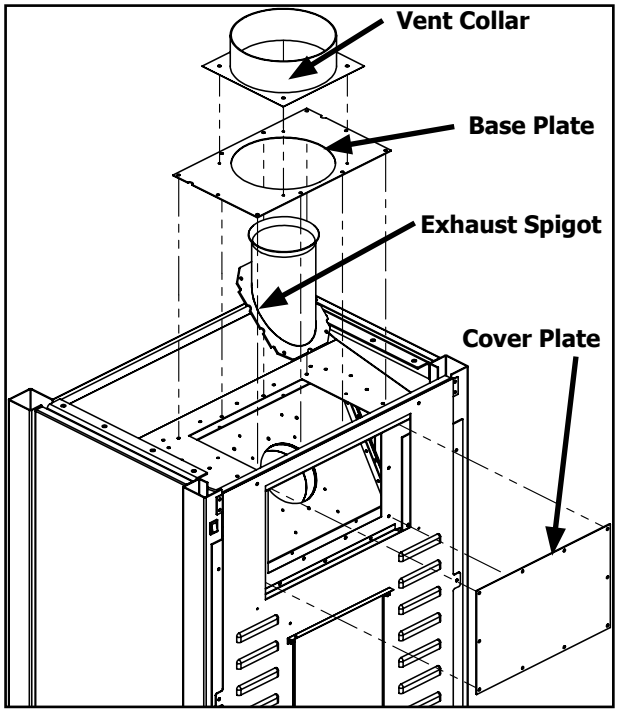


**Figure 18. Vent Conversion - Step 2**

**Step 3:** Switch the removed parts around as shown in Figure 19 and re-install all 28 screws. To correctly install the base plate keep the locating notch on each side at the bottom. Also note the exhaust spigot uses a lower set of holes when setup as a rear vent.

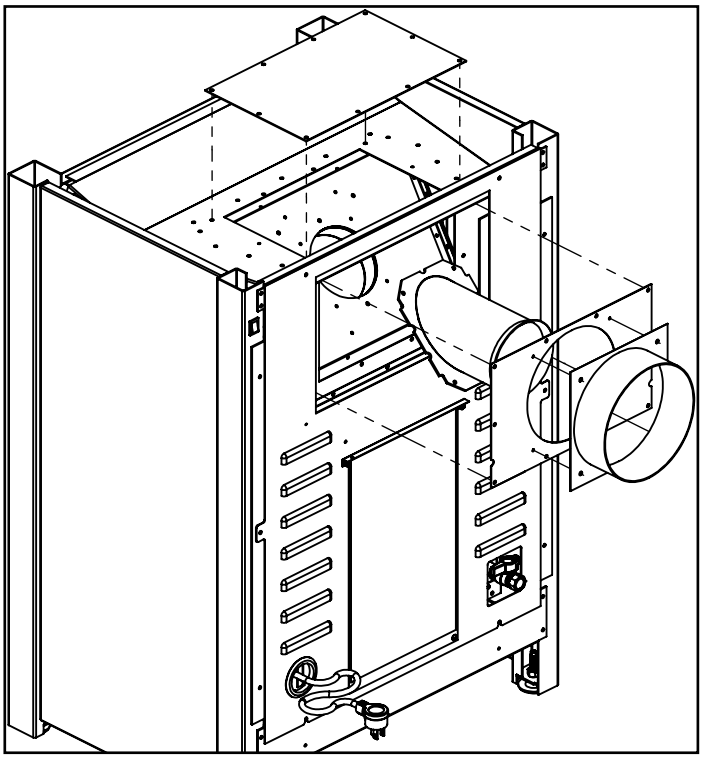

**Figure 19. Vent Conversion - Step 3**

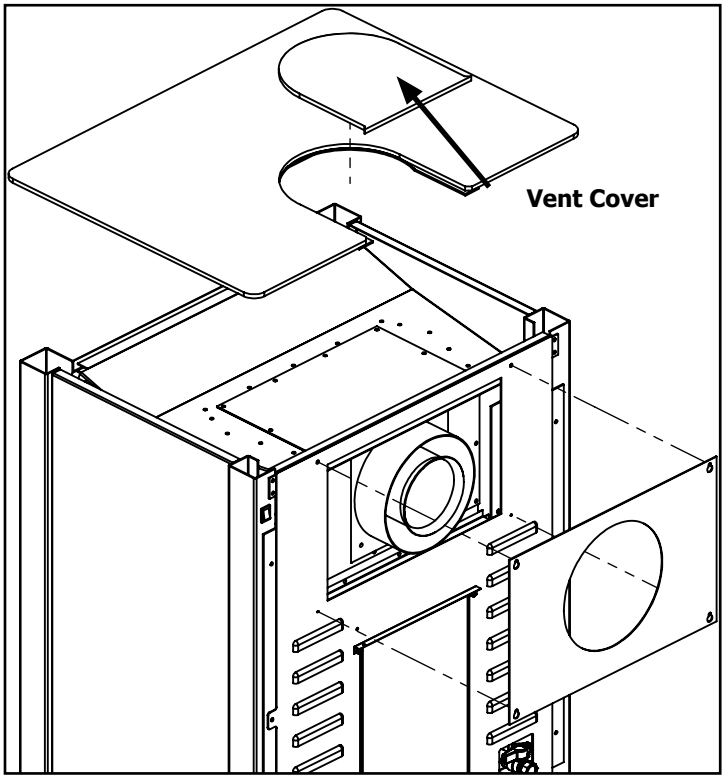


**Figure 20. Vent Conversion - Step 4**

**Step 4:** Re-install the Plate Top. Re-install the back plate and tighten the four retaining screws. Finally, install the vent cover supplied with the S20 as shown in Figure 20.

# Initial Installation

## QUALIFIED INSTALLERS ONLY

### Direct Vent:

**WARNING: This appliance has been designed to draw room air for proper heat circulation from the bottom of the unit, and out the top front. Blocking or modifying these openings in any way can create hazardous situations.**

The vent length for the S20 must be between 7" (18 cm) and 44ft (13.4 m). This model is vented with co-axial 4" intake, 6 5/8" exhaust aluminum or stainless steel approved rigid vent leading into a vertical or horizontal termination cap. The flue collar of this model will fit inside of a standard 4" x 6 5/8" vent and must be either correctly interlocked or fastened, with three screws directly to the vent.

Check periodically that the vents are unrestricted. Also ensure that all direct vent pipes have been properly sealed and installed after routine inspection or cleaning. The air intake and exhaust pipes must be installed in the correct location on top or rear of the S20.

### Venting Clearances:

A 1" (25 mm) clearance to combustibles must be maintained around any vertical vent pipe. Around a horizontal vent pipe, the clearance to combustibles should be 2" (51 mm) above and 1½" (38 mm) on the sides and bottom. When combustible materials are directly above a 90° elbow, 3" (76 mm) of clearance are necessary.

**Table 2. Vent Pipe Minimum Clearances.**

| | Vertical Pipe to the Side Walls | Horizontal Pipe to the Sides & Bottom | Above an Elbow Above the Unit | Above an Elbow Not Above the Unit | Above Horizontal Vent Pipe | Wall Frame 8" (203mm) or less |
|---|---|---|---|---|---|---|
| Hard Pipe | 1" (25.4 mm) | 1½" (38.1 mm) | 3" (76.2 mm) | 3" (76.2 mm) | 2" (51 mm) | 10"x10" (25x25cm) |

A 10" (254 mm) x 10" (254 mm) frame (see Figure 21) will assure the proper support and spacing for the vent pipe as it passes through the wall. Installations in Canada require that a wall thimble be used for passing through walls and ceilings. All sealing and vapour barriers must comply with local building codes.

The configuration of the venting pipes depends on the locations of walls, ceilings, and studs. However, the pipes cannot be of arbitrary length and arrangement. Because the length of the vertical and horizontal sections dramatically affects the burning efficiency of the fireplace, certain guidelines have been set in Initial Installation - Allowable Vent Configurations. Venting terminals can not be recessed into a wall or siding.

**WARNING: This gas appliance must not be connected to a chimney flue serving a separate solid-burning appliances.**

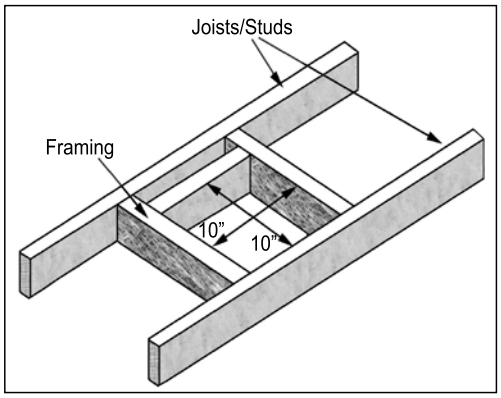


**Figure 21. Vent Framing For Wall or Ceiling.**

### Approved Venting Parts:

**Table 3: Approved Vent Manufacturers**

| Manufacturer | Trade Name | Nominal Sizes |
|---|---|---|
| American Metal Products | AmeriVent Direct | 4" - 6 5/8" |
| ICC | EXCELDirect | 4" - 6 5/8" |
| Security Chimneys International LTD | Secure Vent | 4" - 6 5/8" |
| Selkirk Metalbestos | Direct-Temp | 4" - 6 5/8" |
| M&G Dura-Vent | Direct Vent GS | 4" - 6 5/8" |

# Initial Installation

## QUALIFIED INSTALLERS ONLY

The S20 fireplace has been tested and certified for use with AMERICAN METAL PRODUCTS "AMERIVENT DIRECT", M&G DURAVENT TYPE GS PIPE FOR GAS STOVES. SECURITY CHIMNEY'S "SECURE VENT DIRECT VENT SYSTEM" and SELKIRK "DIRECT-TEMP VENT SYSTEM" kits are available for horizontal and vertical venting. When planning an installation, it will be necessary to select the proper length of vent pipe for the particular requirements. WARNING: Do not mix parts from different vent manufacturers' systems.

EXCEPTION TO WARNING: This product has been evaluated by Intertek for using a Direct Vent GS starting collar in conjunction with Secure Vent, Direct-Temp, AmeriVent Direct, and EXCELDirect venting systems. Use of these systems with the Direct Vent GS starting collar is deemed acceptable and does not affect the Intertek listing of the appliance.

**Table 4: Vent part numbers (Must state if galvanized or black wanted, PART NUMBERS).**

| Direct Vent GS | Direct-Temp | Secure Vent | Ameri Vent Direct | Description |
|---|---|---|---|---|
| 908 | 4DT-6 | SV4L6 | | 6" pipe length |
| | | | 4D7 | 7" pipe length |
| 907 | 4DT-9 | | | 9" pipe length |
| 906 | 4DT-12 | SV4L12 | 4D12 | 12" pipe length |
| 904 | 4DT-24 | SV4L24 | 4D2 | 24" pipe length |
| 903 | 4DT-36 | SV4L36 | 4D3 | 36" pipe length |
| 902 | 4DT-48 | SV4L48 | 4D4 | 48" pipe length |
| 945 | 4DT-EL45 | SV4EBR45 | 4D45B | 45° elbow, black |
| 990 | 4DT-EL90 | SV4EBR90 | 4D90B | 90° elbow, black |
| 950 | 4DT-VS | SV4VS | | Vinyl siding standoff/sheild |
| 942 | 4DT-WT | SV4RSN | 4DWT | Wall thimble |
| 953 | 4DT-SC | SV4FC | 4DSC | Storm collar |
| 963 | 4DT-FS | SV4BF | 4DFSP | Fire stop |
| 988 | 4DT-WS/B | SV4BM | 4DWS | Wall strap/support/band |
| 970 | 4DT-HKA | SV0SHK | 4DHTK1 | Horizontal termination kit (SD: Basic Kit, SEL: Kit A, SC: Standard Kit) |
| 911 | | | | 11" to 14 ⅝" pipe, adjustable |
| | 4DT-AJ | | 4D12A | 4" to 10" pipe , adjustable |
| | | SV4LA12 | | 1½" to 12" pipe , adjustable |
| 943 | 4DT-AF6 | | 4DF | Flashing, 0/12 to 6/12 roof pitch |
| 943S | 4DT-AF12 | | 4DF12 | Flashing, 7/12 to 12/12 roof pitch |
| 943F | | SV4F | | Flat flashing |
| 991 | 4DT-HVC | | | High wind vertical termination |
| 985 | 4DT-HHC | | | High wind horizontal termination |
| 978 | 4DT-VKC | SV0FAK | 4DVTK | Vertical termination kit |
| 971 | 4DT-HKB | SV0SHK2 | 4DHTK2 | Horizontal termination kit (SD: Kit A, SEL: Kit B, SC: Kit) |

## QUALIFIED INSTALLERS ONLY

### HORIZONTAL TERMINATION - REAR VENT WITH NO VERTICAL RISE:

The S20 can be installed in rear vent applications with no vertical rise within the parameters as shown in Figures 22 and 23. Refer to the INITIAL INSTALLATION - VENTING TERMINATION RESTRICTIONS section for permitted termination installations.

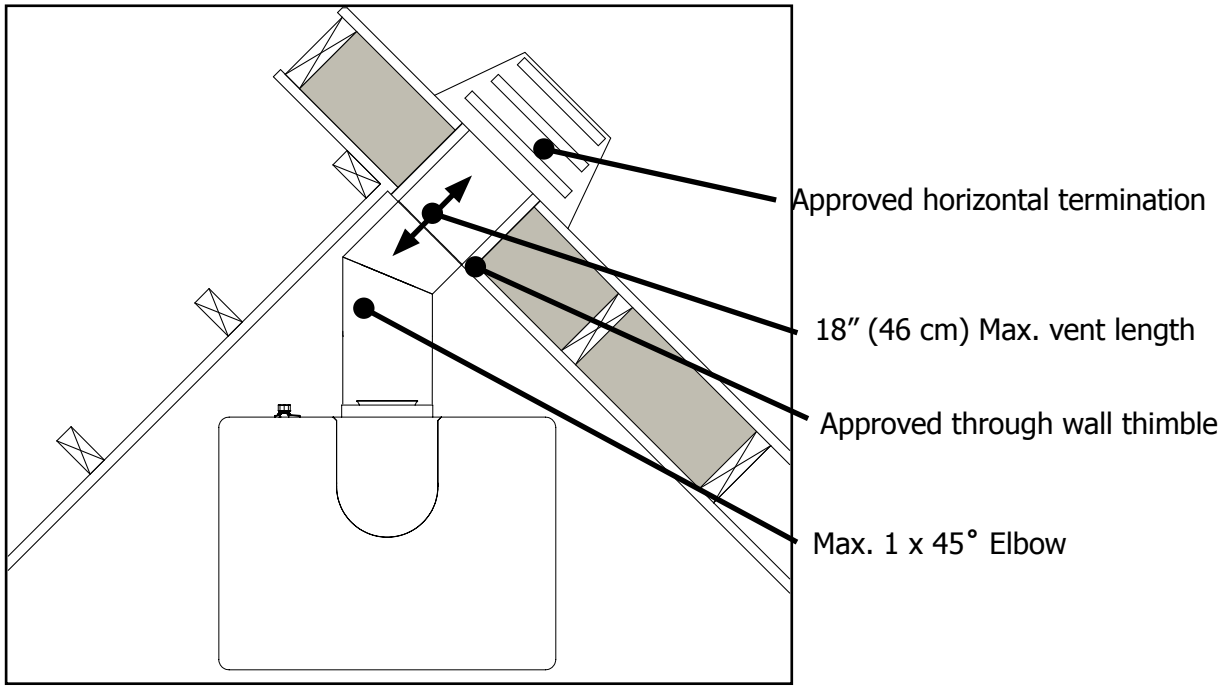


**Figure 22. Corner Rear Vent - No Vertical Rise**

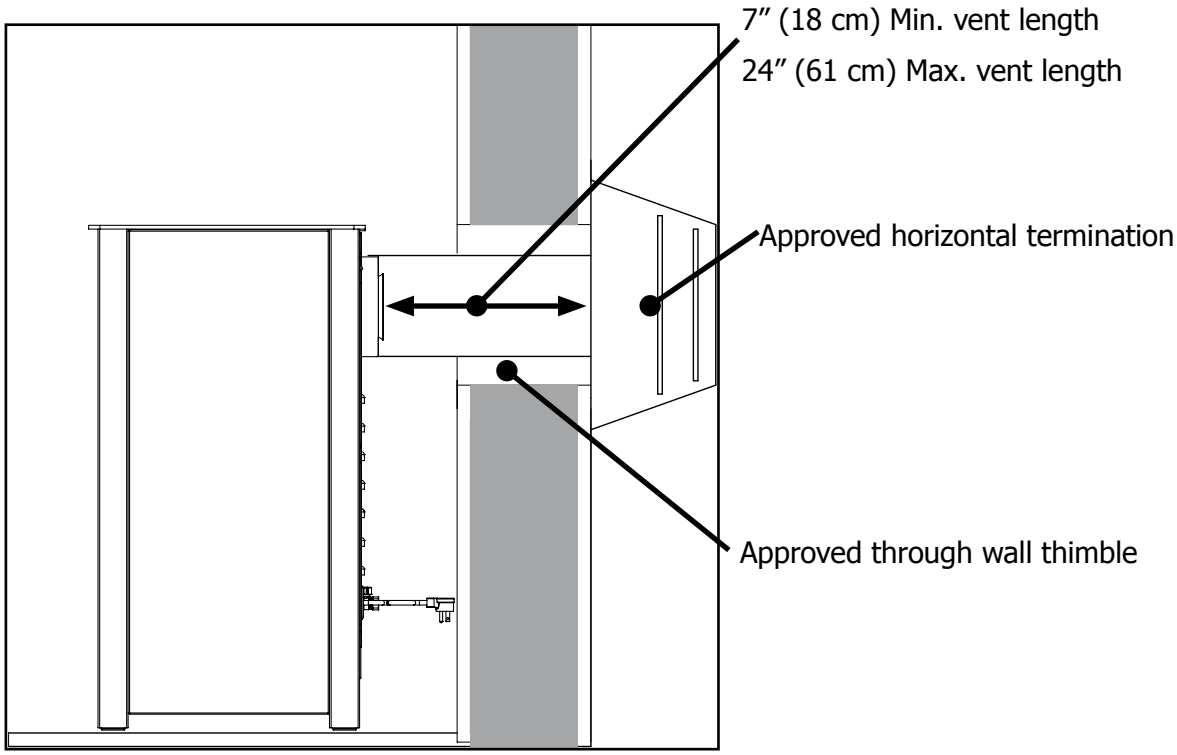


**Figure 23. Flat to Wall Rear Vent - No Vertical Rise**

# Initial Installation

## QUALIFIED INSTALLERS ONLY

### Mobile Home Installation:

The S20 can be installed in a mobile home but must be securely fastened to the floor as directed below:

- Remove the cast door and louvers as outlined in Maintenance and Service - Cast Door Removal
- Using a T20 screwdriver remove the three front screws and three rear screws on each cabinet side panel. Remove the cabinet side panels (see Figure 24)
- Secure the S20 to the floor using the two holes (one per side) in the pedestal and hearth pad (if used) (see Figure 24).
- Insure the unit is electrically grounded to the chassis of the home (permanently).
- Re-install the cabinet side panels and cast door.

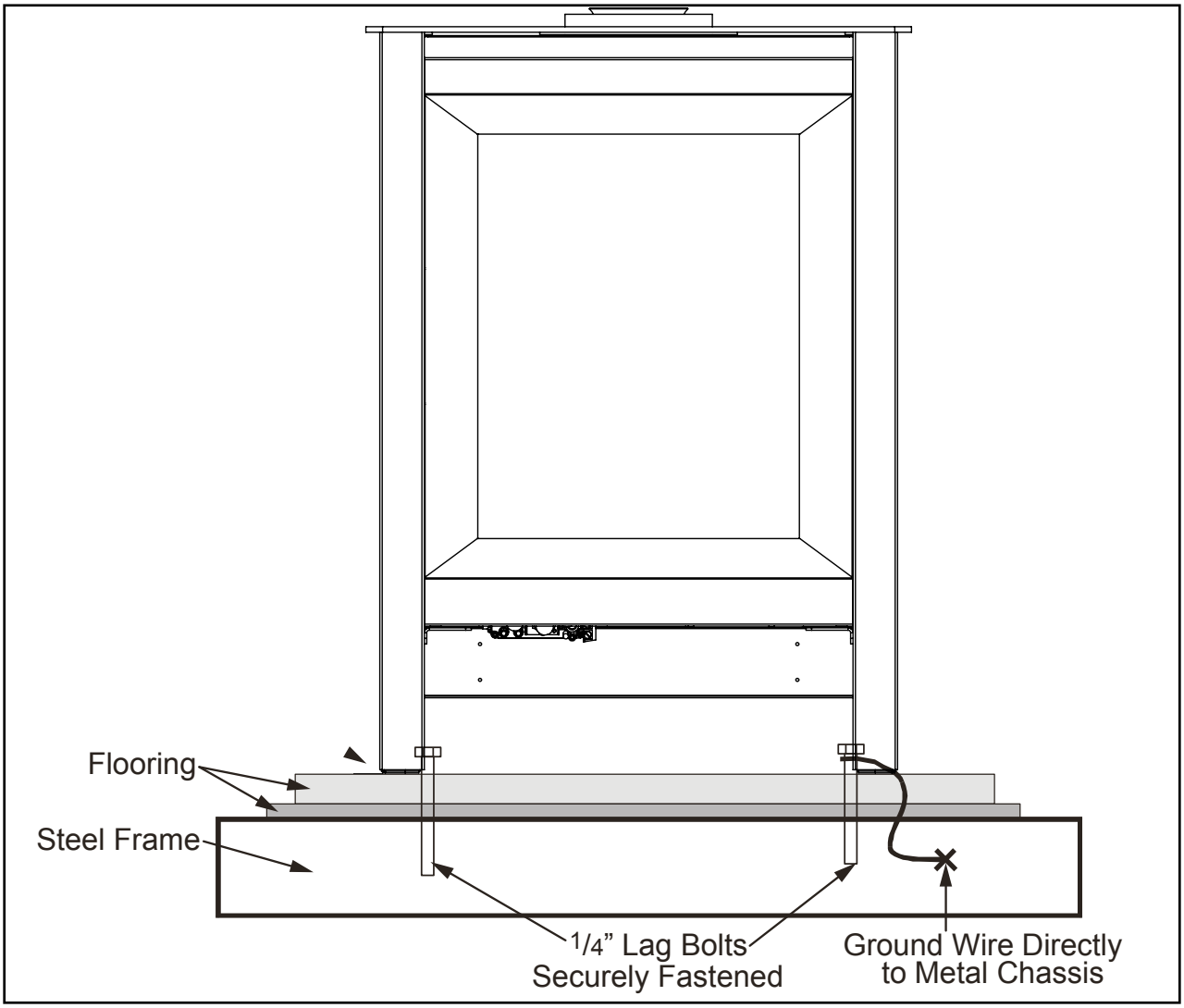


**Figure 24: Correct Mobile Home Installation**

**<u>Caution:</u> The structural integrity of the manufactured home's floor, wall, and ceiling/roof must be maintained**

### Vent Termination Restrictions:

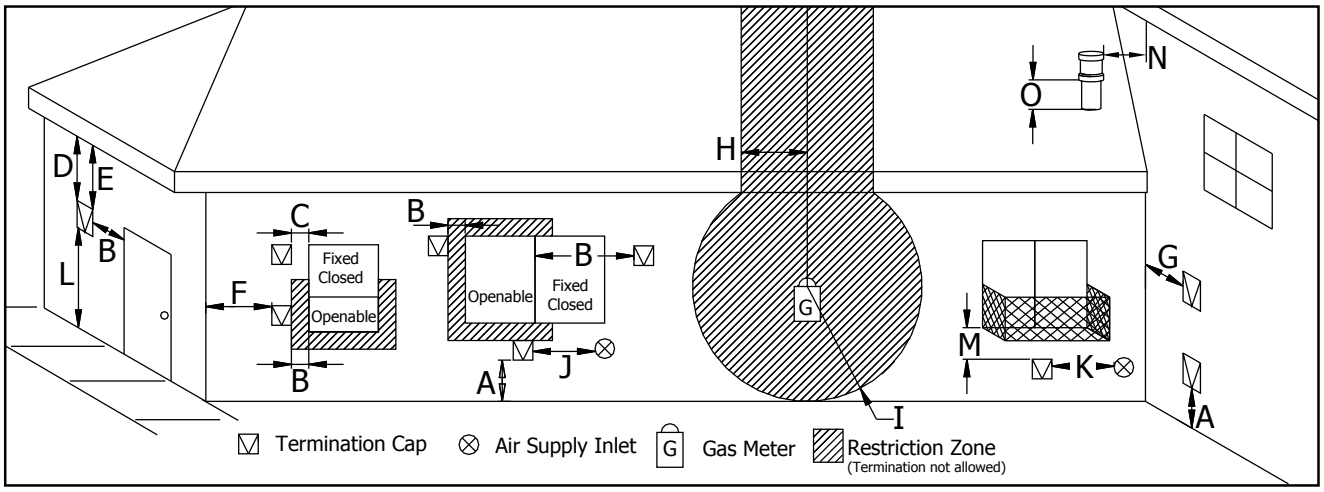


**Figure 25. Vent Termination Restrictions, refer to Table 5.**

**Table 5: Vent termination clearances.**

| Letter | Canadian Installation [1] | US Installation[2] | Description |
|---|---|---|---|
| A | 12 in (30 cm) | | Clearance above grade, verandah, porch, deck, or balcony. |
| B | 12 in (30 cm) | 9 in (23 cm) | Clearance from window or door that may be opened. |
| C | 12 in (30 cm)* | | Clearance from permanently closed window (to prevent condensation). |
| D | 24 in (60 cm)* | | Vertical clearance to ventilated soffit located above the terminal, within a horizontal distance of 2 ft (60 cm) from center line of terminal. |
| E | 18 in (45 cm)* | | Clearance to unventilated soffit. |
| F | 12 in (30 cm)* | | Clearance to outside corner. |
| G | 12 in (30 cm)* | | Clearance to inside corner. |
| H | 3 ft (91 cm) within a height of 15 ft (4.5 m) above the meter/ regulator assembly | 3 ft (91 cm) within a height of 15 ft (4.5 m) above the meter/ regulator assembly* | Clearance to each side of center line extended above meter/regulator assembly. |
| I | 3 ft (91 cm) | 3 ft (91 cm)* | Radial clearance around service regulator vent outlet. |
| J | 12 in (30 cm) | 9 in (23 cm) | Clearance to non-mechanical air supply inlet to building, or the combustion air inlet to any other appliance. |
| K | 6 ft (1.83 m) | 3 ft (91 cm) above if within 10 ft (3 m) horizontally | Clearance to mechanical air supply inlet. |
| L | 7 ft (2.13 m)[t] | 7 ft (2.13 m)*[t] | Clearance above paved sidewalk or paved driveway located on public property. |
| M | 12 in / 30 cm[+] | 12 in / 30 cm*[+] | Clearance under verandah, porch, deck, or balcony. |
| N | 12 in (30 cm)* | | Clearance horizontally to any surface (such as an exterior wall) for vertical terminations. |
| O | 12 in (30 cm) | | Clearance above roof line for vertical terminations. |

[1] In accordance with the current CSA B149, Natural Gas and Propane Installation Code.
[2] In accordance with the current ANSI Z223.1 NFPA 54, National Fuel Gas Code.
* These numbers are only estimates.
[t] A vent shall not terminate directly above a side walk or paved driveway that is located between two single family dwellings and it serves both dwellings.
[+] Permitted only if verandah, porch, deck, or balcony is fully open on a minimum of two sides beneath the floor.

Clearances are in accordance with local installation codes and the requirements of the gas supplier.

**NOTE: Venting terminals shall not be recessed into walls or siding.**

## QUALIFIED INSTALLERS ONLY

### Allowable Vent Configurations:

Figures 26.1 and 26.2 show the range of possible vent configurations if the unit is top or rear vented, for vertical and horizontal terminations. Any layout that remains within the shaded areas is acceptable. Having the fewest number of elbows is ideal, as they tend to disrupt air movement. Using 45˚ elbows is preferable to using 90˚ elbows. Also, a shorter vent system will perform better than a longer one. When top vented, the total length of horizontal vent pipe can not exceed 14 feet (4.27m) and the total vent length can not exceed 44ft (13.4m). Any combination of rise and run can be used as long as it lays within the shaded area (a total of two (2) 90˚ elbows or four (4) 45˚ elbows can be used. In addition to what is shown, if a 90˚ elbow is used in the horizontal plane, 3 feet (91.4cm) must be subtracted from the allowable horizontal run (for each 45˚ elbow, 1½ feet must be subtracted).

**Note**: Air restrictors (supplied with the unit) may be required for vertical venting runs of 8ft (2.44m) or taller. See Air Restrictor Settings for more information

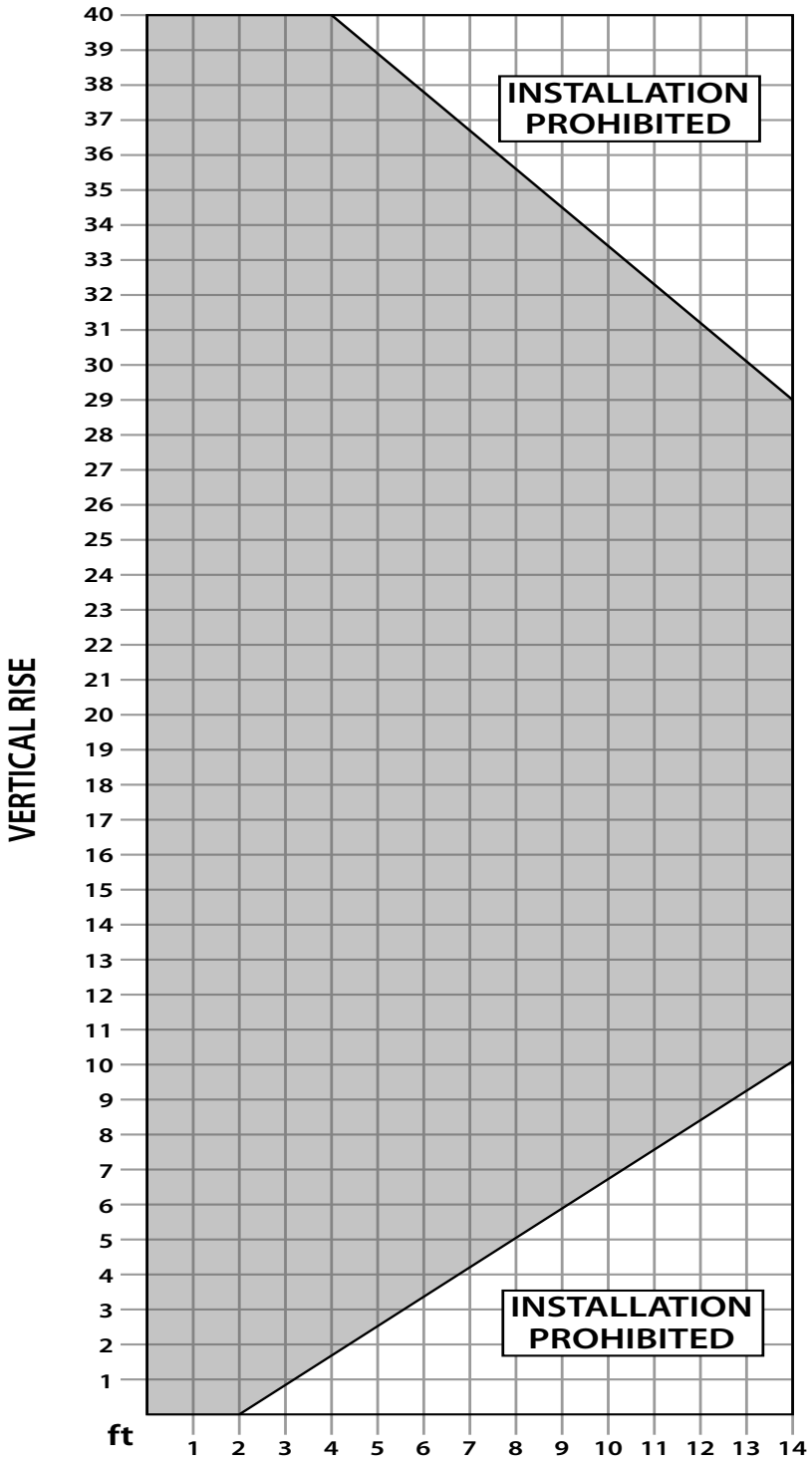


**Figure 26.1 Possible Vent Configurations for Top Vented Vertical and Horizontal Terminations.**

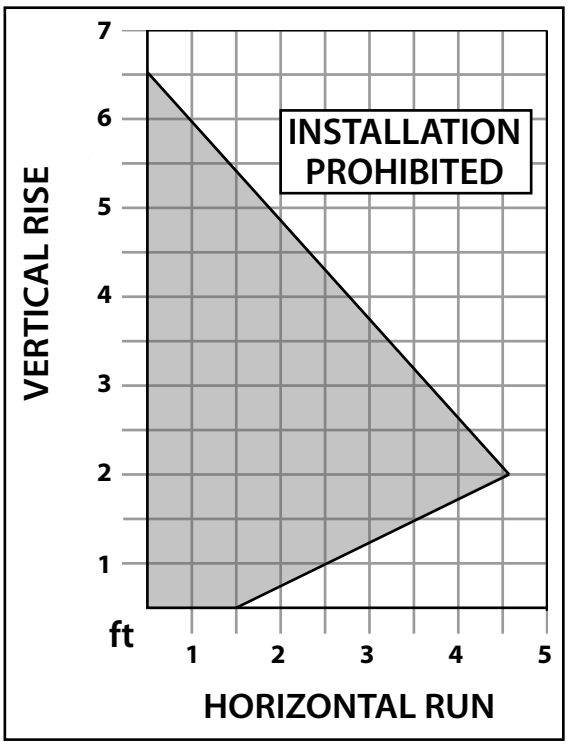


**Figure 26.2 Possible Vent Configurations for Rear Vented Vertical and Horizontal Terminations.**

## QUALIFIED INSTALLERS ONLY

### Air Restrictor Settings:

When installing the S20 with 8ft (2.44M) or more of vertical venting it may be necessary to restrict the fresh air supply in the firebox to control the combustion and flame appearance. Using the pair of air restrictors supplied with the unit, install them on each side of the firebox and adjust to the correct setting as outlined in the figure and table below. To install the air restrictors first you must remove the log set, air diffuser, and creamic brick panels (see Secondary Installation - Optional Porcelain Panels Installation and Removal) then remove the set screws as shown on each side of the firebox. Next, install the restrictors at the correct setting and tighten the set screws to hold them in place.

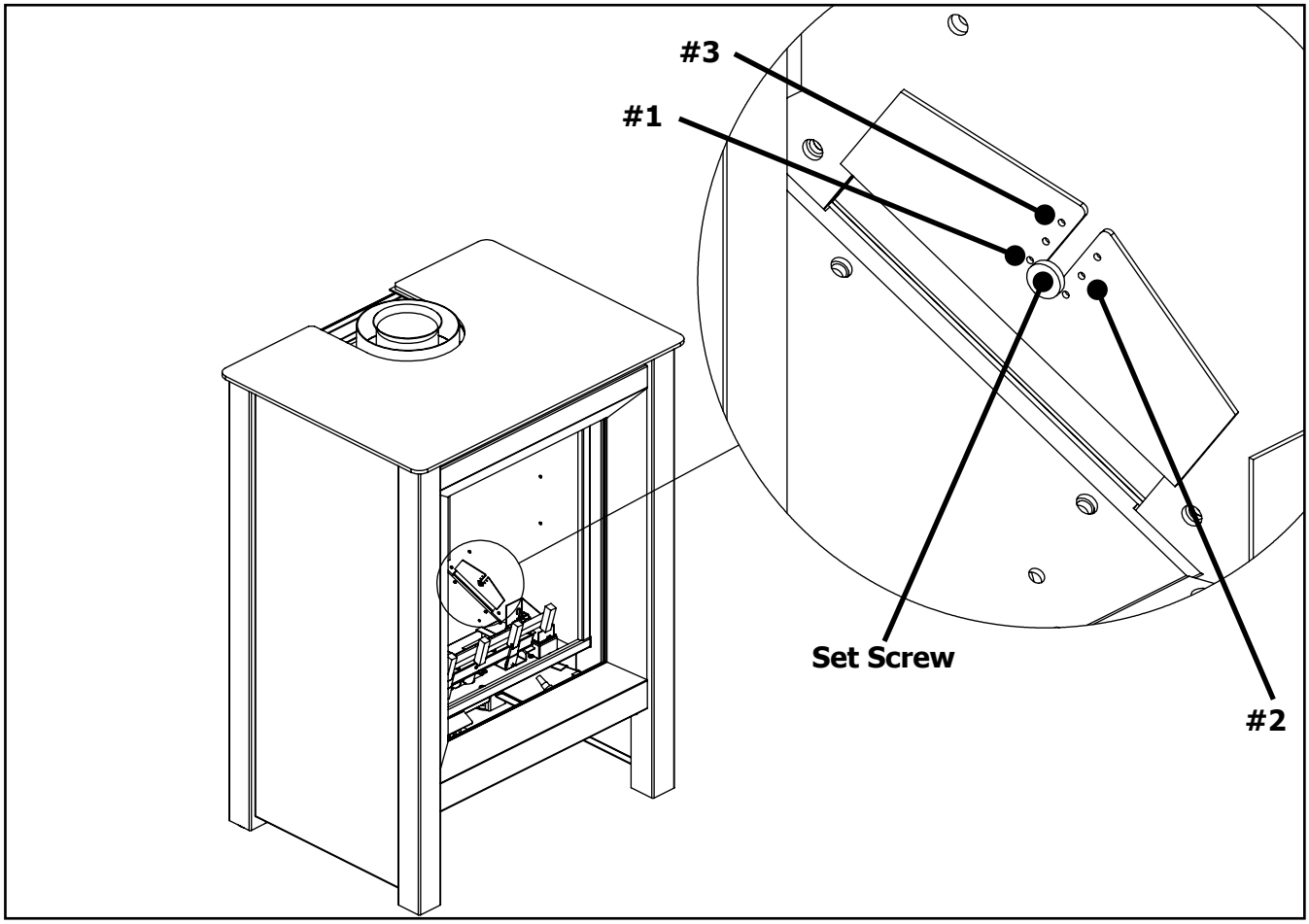


**Figure 27: Installation of Air Restrictors**

**Table 6: Air Restrictor Settings**

| Air Restrictor Settings | | |
|---|---|---|
| **Length of Vertical Vent** | **Propane** | **Natural Gas** |
| Less than 8ft (2.44m) | No Restriction Required | No Restriction Required |
| 8ft (2.44m) - 20ft (6.1m) | No Restriction Required | No Restricition Required |
| Through Roof Termination, more than 20ft (6.1m) to 40ft (12.19m) | Setting #1 | Setting #1 |

## QUALIFIED INSTALLERS ONLY

### Horizontal Termination:

**NOTES:**

1. **Horizontal pipes must not be level. For every 12 inches (305 mm) of horizontal travel (away from the stove), there should be at least ¼ inch (6.4 mm) of vertical travel. Never allow the vent to run downward, as this could cause high temperatures or even present the possibility of a fire.**
2. The exterior of the horizontal vent termination must not be blocked or obstructed.
3. If the vent termination is not being attached to wood, the four wood screws provided should be replaced with material appropriate fasteners.
4. For buildings with vinyl siding, a vinyl standoff should be installed between the vent cap and the exterior wall. Attach the vinyl siding standoff to the horizontal termination. Note that the termination bolts onto the flat portion of the standoff, providing an air space between the wall and the vent termination. The air gap prevents excessive heat from possibly melting the vinyl siding.
5. Horizontal pipes must be supported every 3 feet (914 mm). Plumber's all round strap will suffice.

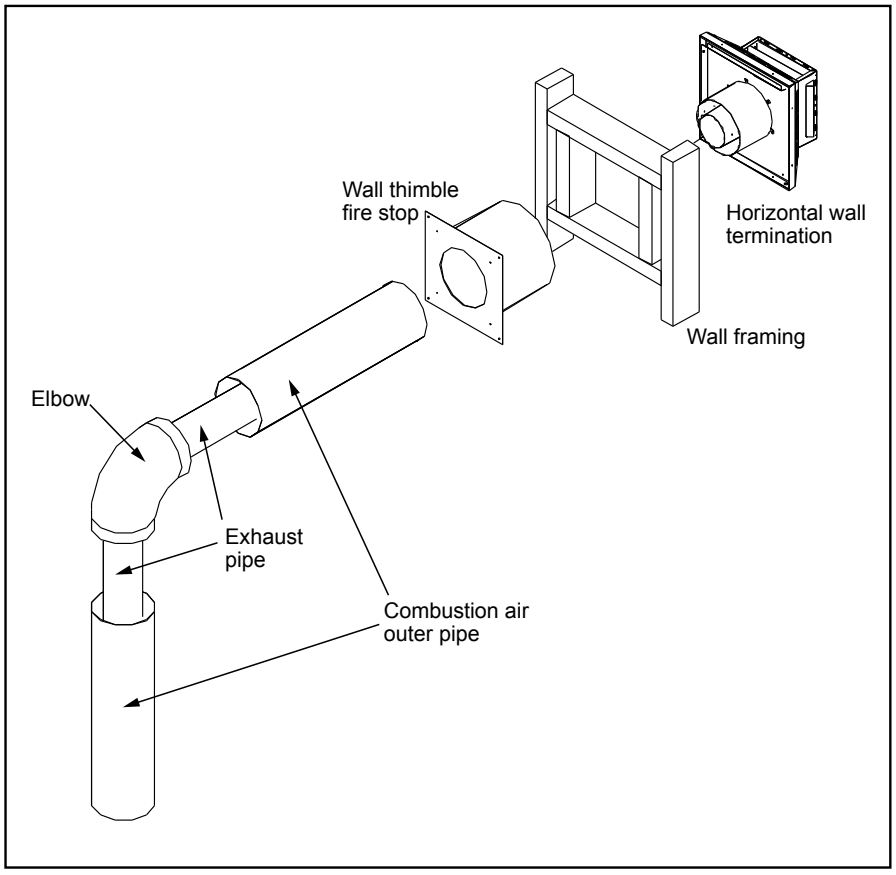


**Figure 28. Horizontal Vent Termination**

6. When running horizontal pipe, clearances to combustibles must be maintained 1½ inches (38 mm) sides, 1½ inches (38 mm) bottom, and 2 inches (51 mm) top.

**Step 1.** Set the fireplace in the desired location. Check to determine if wall studs will be in the way when the venting system is attached. If this is the case, the location of the fireplace may have to be adjusted or the venting may have to be offset.

**Step 2.** Direct vent pipe sections are designed with special twist-lock connections. Dry fit the desired combination of pipe and elbows to the appliance adaptor.

**Step 3.** With the pipe in the correct position and attached to the fireplace, mark the wall for a 10 inches (25.4 cm) x 10 inches (25.4 cm) square hole (see Figure 28). The center of the hole should match the center line of the horizontal pipe. Cut and frame the hole in the exterior wall where the vent will be terminated. If the wall being penetrated is made of a non-combustible material (i.e. masonry or concrete) a 7 inches (17.8 cm) hole is acceptable.

**Step 4.** With the hole now framed, the wall thimble installed, and the pipe extending into the wall, proceed to the outside. Attach the termination to the pipe using RTV and Mil-Pac or Rutland No 78 Stove and Gasket Cement to seal joints. The vent pipe must extend into the vent cap at least 1¼ inches (3.2 cm). Secure the connection between the vent cap and the pipe by attaching the two (2) sheet metal straps, which extend from the vent cap assembly to the outer wall of the vent pipe. Bend any remaining portion of the strap back towards the vent cap. Security Secure Vent uses a twist lock cap.

**Step 5.** Position the horizontal vent termination in the center of the 10 inches (25.4 cm) square hole and attach to the exterior wall with the four screws provided. The arrow on the vent termination should be pointing up. Run a bead of non-hardening mastic around the edges of the vent cap, to make a seal with the wall. Ensure the proper clearances to combustibles have been maintained.

### VERTICAL TERMINATION:

**Step 1.** Check the instructions for required clearances (air spaces) to combustibles when passing through ceilings, walls, roofs, enclosures, attic rafters, or other nearby combustible surfaces. Do not pack air spaces with insulation.

**Step 2.** Set the gas appliance in the desired location. Drop a plumb bob down from the ceiling to the position of the appliance flue exit, and mark the location where the vent will penetrate the ceiling. Drill a small hole at this point. Next, drop a plumb bob from the roof to the hole previously drilled in the ceiling, mark the spot where the vent will penetrate the roof. Determine if ceiling joists, roof rafters, or other framing will obstruct the venting system. You may wish to relocate the appliance, or to offset, to avoid cutting load bearing members.

**Step 3.** To install the Round Support Box/Wall Thimble in a flat ceiling, cut a 10 inch (25.4 cm) square hole in the ceiling, centered in the hole drilled in Step 2. Frame the hole as shown in Figure 21.

**Step 4.** Assemble the desired lengths of black pipe and elbows necessary to reach from the appliance adapter up through the Round Support Box. Insure that all pipe and elbow connections are in their fully twist-locked position.

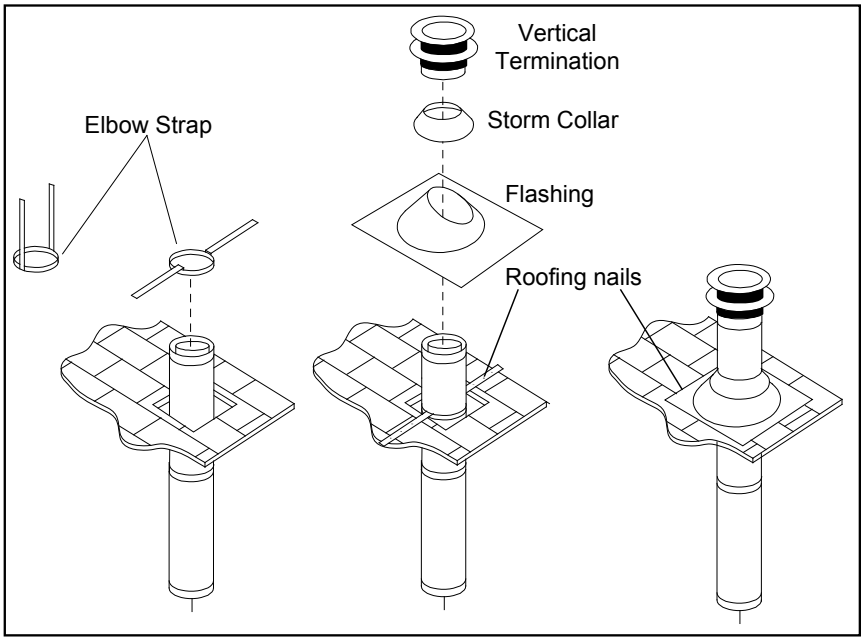


**Figure 29. Vertical Vent Termination**

## QUALIFIED INSTALLERS ONLY

**STEP 5.** Cut hole in the roof centered on the small hole placed in the roof from Step 2. The hole should be of sufficient size to meet minimum requirements for Clearance to Combustibles, as specified. Continue to assemble lengths of pipe and elbows necessary to reach from the ceiling support box up through the roof line. Galvanized pipe and elbows may be utilized in the attic, as well as above the roof line. The galvanized finish is desirable above the roof line, due to the higher corrosion resistance.

**STEP 6.** Once the pipe sections have been joined, and run up through the hole in the roof, slip an elbow strap over the exposed sections, bend the support straps outwards, and push the elbow strap down to the roof level, as shown in Figure 29. Tighten the clamp around the pipe section. Use a level to make sure the pipe is truly vertical. With roofing nails, secure the support straps to the roof. Seal the nails holes heads with non-hardening mastic. Trim the excess length of the support straps that extend out beyond the edge of the flashing.

**STEP 7.** Slip the flashing over the pipe section protruding through the roof. Secure the base of the flashing to the roof with roofing nails. Use a non-hardening sealant between the uphill edge of the flashing and the roof. Insure the roofing material overlaps the top edge of the flashing. Verify that you have at least the minimum clearance to combustibles at the roof line.

**STEP 8.** Continue to add pipe sections until the height of the vent cap meets the minimum code requirements. Refer to Figure 30 and Table 7. Note that for steep roof pitches, the vent height must be increased. In high wind conditions, nearby trees, adjoining roof lines, steep pitched roofs, and other similar factors can result in poor draft, or down drafting. In these cases, increasing the vent height may solve the problem.

**STEP 9.** Slip the storm collar over the pipe, and push it down to the top of the roof flashing as shown in Figure 29. Use the non-hardening sealant around the joint between the pipe and the storm collar.

**STEP 10.** Twist-lock the vent cap.

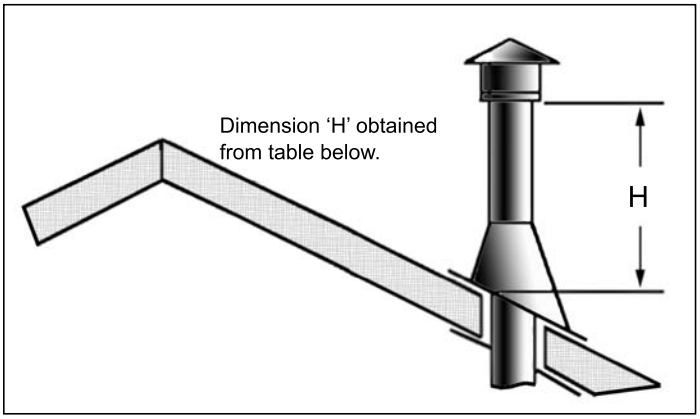


**Figure 30: Height of Vertical Termination; Reference Table 7.**

**Table 7: Minimum 'H' for Figure 35.**

| Roof Pitch | Minimum Height (H) | |
|---|---|---|
| | Feet | Meters |
| Flat to 7/12 | 1 | 0.3 |
| Over 7/12 to 8/12 | 1.5 | 0.46 |
| Over 8/12 to 9/12 | 2 | 0.61 |
| Over 9/12 to 10/12 | 2.5 | 0.76 |
| Over 10/12 to 11/12 | 3.25 | 0.99 |
| Over 11/12 to 12/12 | 4 | 1.22 |
| Over 12/12 to 14/12 | 5 | 1.52 |
| Over 14/12 to 16/12 | 6 | 1.83 |
| Over 16/12 to 18/12 | 7 | 2.13 |
| Over 18/12 to 20/12 | 7.5 | 2.29 |
| Over 20/12 to 21/12 | 8 | 2.44 |

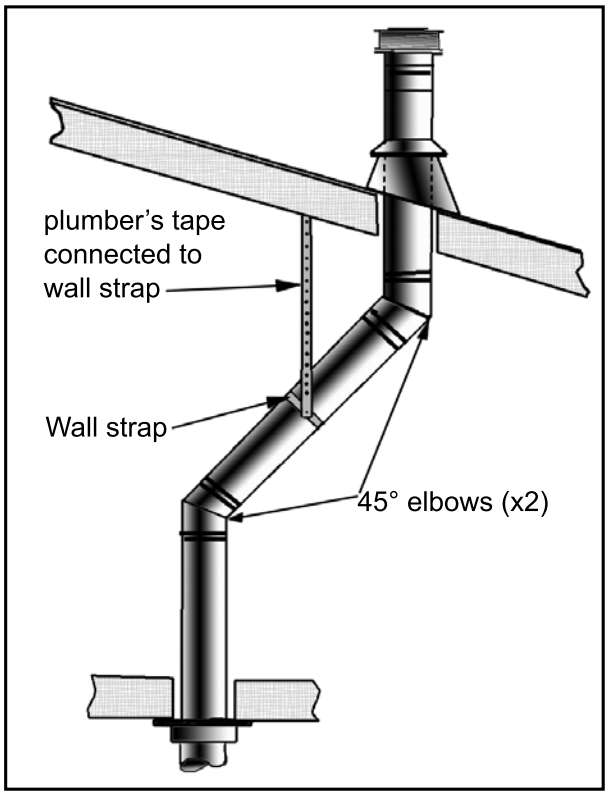


**Figure 31: Use of Wall Straps.**

closets and storage spaces, which the vertical vent passes through, must be enclosed. The enclosure may be framed and sheet-rocked with standard building materials. However consult the appliance manufactures installation instructions for the minimum allowable clearance between the outside of the vent pipe, and the combustible surfaces of the enclosure. Do not fill any required air spaces with insulation.

**NOTES:**

**(1)** If an offset is necessary in the attic to avoid obstructions, it is important to support the vent pipe every 3 feet (914 mm), to avoid excessive stress on the elbows, and possible separation. Wall straps are available for this purpose (see Figure 31).

**(2)** When ever possible, use 45° degree elbows instead of 90° degree elbows. The 45° degree elbow offers less restriction to the flow of flue gases and intake air.

**(3)** For multi story installations; a ceiling firestop is required at the second floor, and any subsequent floors (see Figure 32). The opening should be framed to 10" (254 mm) x 10" (254 mm) inside dimensions, in the same manner as shown in Figure 21.

**(4)** Any occupied areas above the first floor, including

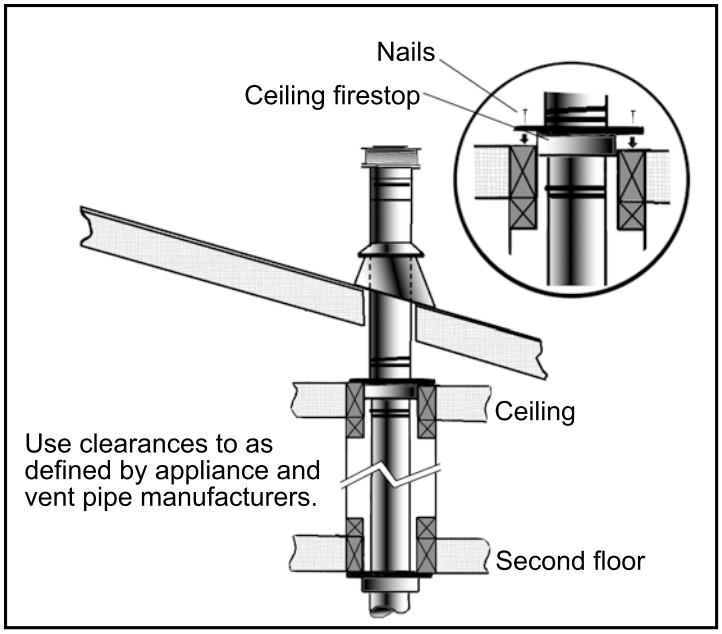


**Figure 32: Multi-Story Vent Pipe Installation.**

# Initial Installation

## QUALIFIED INSTALLERS ONLY

### Gas Line Connection and Testing:

**WARNING:** Only persons licensed to work with gas piping may make the necessary gas connections to this appliance.

**GAS LINE CONNECTION**

- This stove is equipped with a certified flexible pipe located on the left side of the unit terminating in a 3/8" female NPT fitting. Consult your local authorities codes or the CAN/CGA B 149 (1 or 2) installation code in Canada, or in the USA gas installations follow either local codes or the current edition of the National Fuel Gas Code ANSI Z223.1.
- The efficiency rating of this appliance is a product thermal efficiency rating determined under continuous operating conditions and was determined independently of any installed system.

The appliance and its shutoff valves must be disconnected from the gas supply piping system during any pressure testing where the pressure exceeds ½ PSIG (3.45 KPa) or damage will occur to the valve.

The appliance must be isolated from the gas supply piping system by closing its individual manual shutoff valve during any pressure testing of the gas supply piping system at test pressures equal to or less than ½ psig (3.45 KPa).

**Always check for gas leaks with a soap and water solution after completing the required pressure test.**

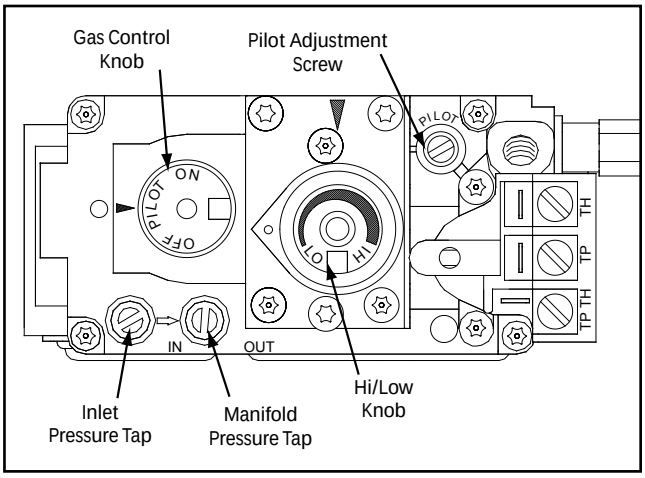


**Figure 33: Fully Labeled Gas Valve.**

**TO TEST VALVE PRESSURES**

The pressure taps are located on the top right of the valve shown in Figure 33.

- Turn set screw 1 turn counter clockwise to loosen,
- Place 5/16" (8 mm) I.D. hose over pressure tap system.
- Check pressures using a manometer.
- When finished, release pressure, remove hose & tighten set screw.

**Table 8: Pressure and BTU Information.**

| | Natural Gas | Propane |
|---|---|---|
| **Main Orifice** | #46 DMS | 1.2 mm |
| **Manifold Pressure** | 3.5" W.C. (0.87 KPa) | 10.0" W.C. (2.49 KPa) |
| **Min. Manifold Pressure** | 1.6" W.C. (0.40 KPa) | 6.4" W.C. (1.59 KPa) |
| **Max Supply Pressure** | 7.0" W.C. (1.74 KPa) | 11.0" W.C. (2.74 KPa) |
| **Min. Supply Pressure** | 4.5" W.C. (1.12 KPa) | 10.4" W.C. (2.59 KPa) |
| **Max BTU/hr Input** | 20,000 BTU/hr (5.86 KW) | 18,500 BTU/hr (8.42 KW) |
| **Min. BTU/hr Input** | 13,600 BTU/hr (3.98 KW) | 14,500 BTU/hr (4.25 KW) |

## NEVER USE AN OPEN FLAME FOR LEAK TESTING.

# Initial Installation

## QUALIFIED INSTALLERS ONLY

### Electrical Requirements:

The fan will not operate if the appliance is cold. Once the unit is lit and the fan is set to the desired level, the fan will automatically turn on upon reaching operating temperature. The fan will automatically turn off after the appliance has cooled down.

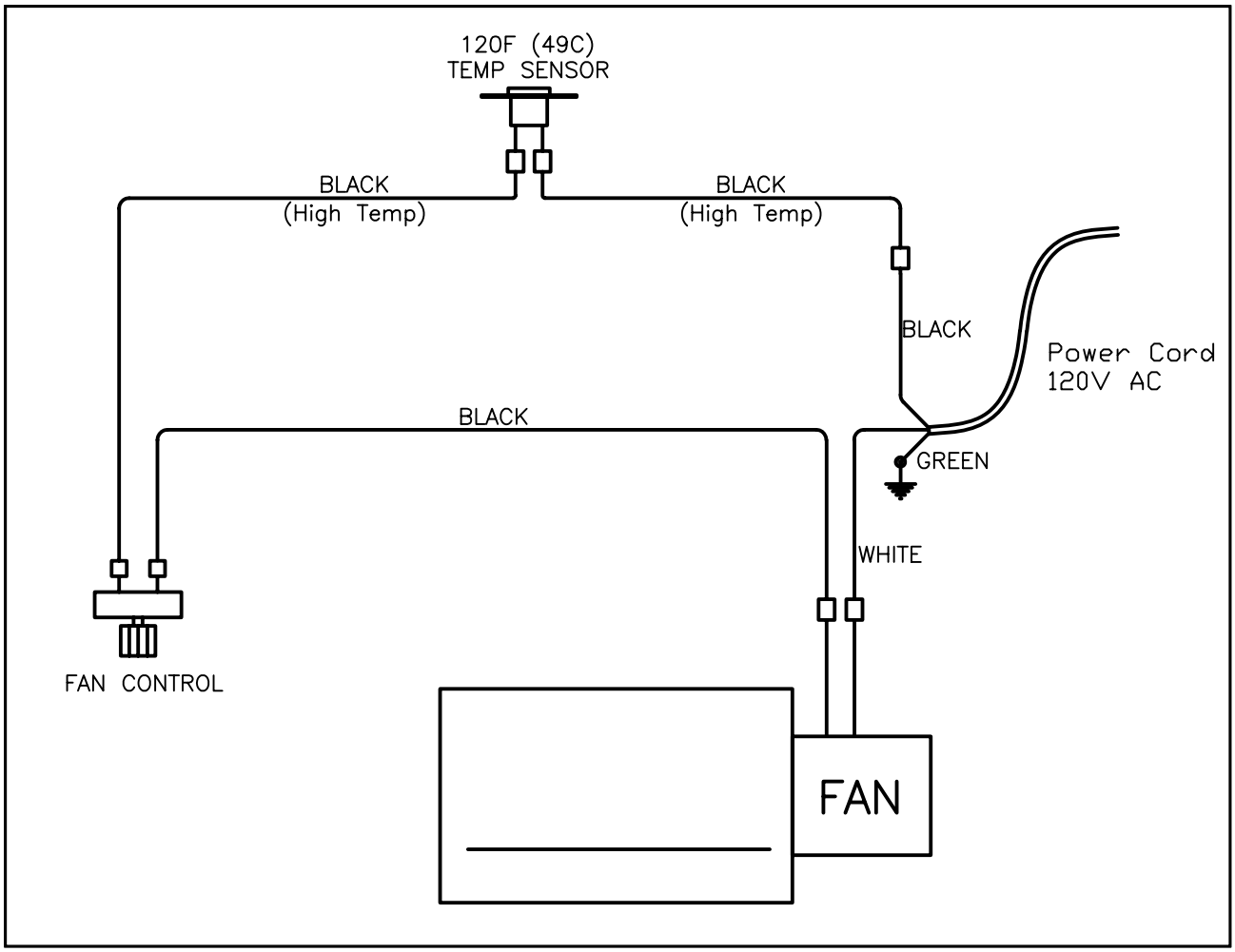


**Figure 34: Fan wiring diagram.**

The fireplace must be electrically connected and grounded in accordance with local codes or, in the absence of local codes, with the current CSA C22.1 Canadian Electrical Code Part 1, Safety Standards For Electrical Installations, or The National Electrical Code ANSI / NFPA 70 in the US.

**WARNING:** The electrical grounding instructions must be followed. The fan kit is equipped with a three-prong (grounding) plug for your protection against shock hazard, and should be plugged directly into a properly grounded three-prong outlet. DO NOT cut or remove the grounding prong from this plug.

**CAUTION:** When servicing controls, label all wires prior to disconnection. Wiring errors can cause improper and dangerous operation. Verify proper operation after servicing.
If any of the original wire as supplied with the appliance must be replaced, it must be replaced with 18 AWG wire with a temperature rating of 105°C

# Secondary Installation

## Fire Grate and Log Set Installation:

The placement of the logs is not arbitrary. If they are positioned incorrectly, the flames can be "pinched" and will not burn correctly. All of the logs come with either a notch or ledge, which make alignment easier. Using the pictures provided, carefully set the logs in place (see Figures 35 through 41).

**NOTE: The logs are fragile and should be handled gently.**

Figure 35: This is how the firebox looks with only the burner, air diffuser, log grate and brick panels in place. The log grate can be easily removed by simply lifting up off the locating screws.



**Figure 35. Empty firebox with grate and locator pins.**

**Step 1**: Place the back log on the top legde of the air duffuser with back up against the rear brick panel. Install the ember bed assembly into the firebox as shown, making sure the ember bed is up against the front lip of the firebox air diffuser (Figure 36)



**Figure 36. Back Log and Ember Bed Installation.**

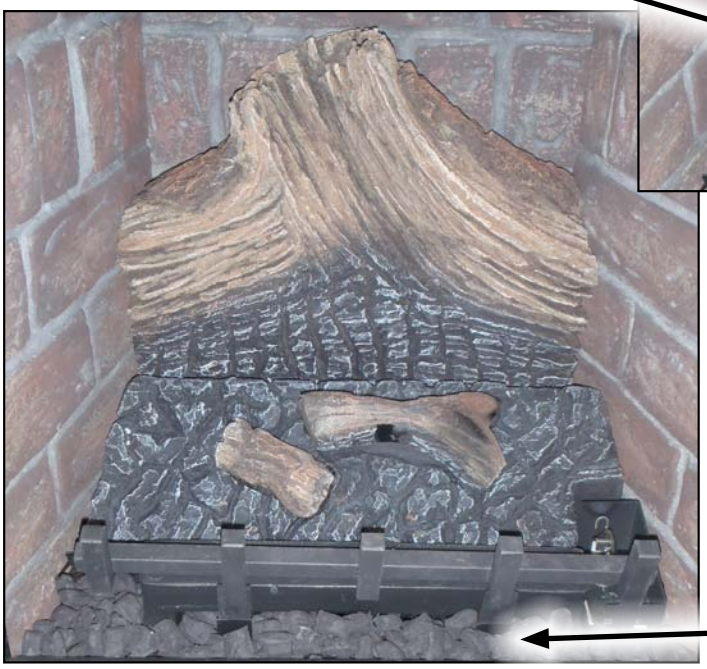

**Step 2**: Fill in the bottom of the firebox using the coal nuggets supplied with the unit as shown in Figure 37.

**Figure 37. Coal Nuggets Installation.**

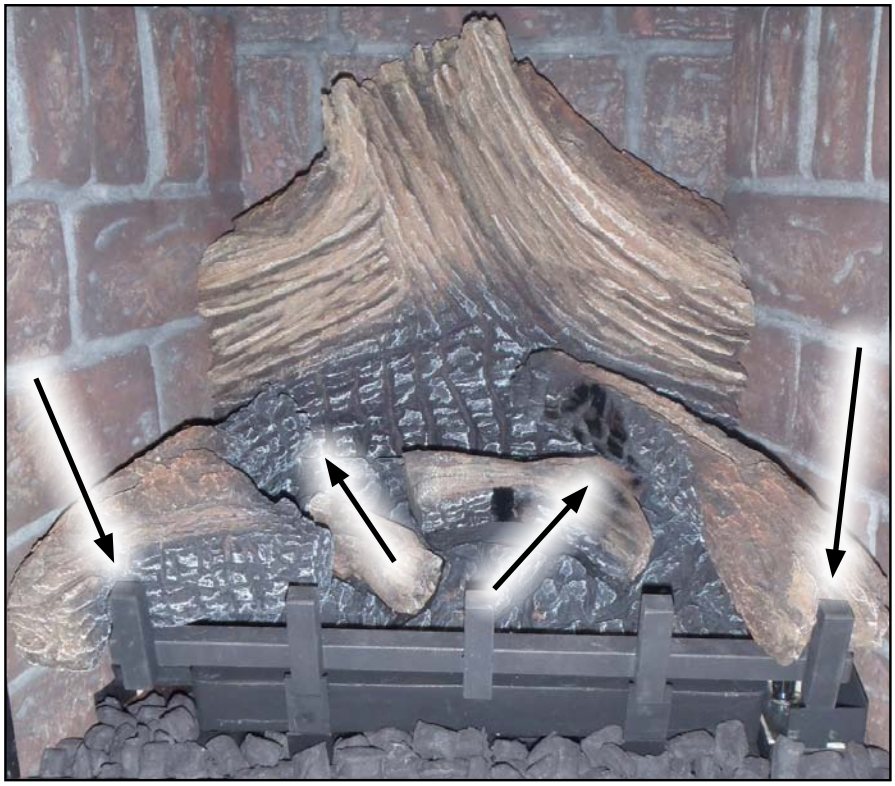

**Figure 38. Third Stage Log Set Installation.**

**Step 3**: Install the big y shaped twig on the far left side by locating the bottom of it on the far left log grate upright. The twig should run parallel with the side of the firebox and the top will rest on the top of the ember bed. Then install the big, slightly curved twig on the far right side by locating the bottom of it on the far right log grate upright. The top will rest on the smooth section of the middle ember bed twig.

**Step 4**: Next, install the second small twig between the two right side log grate uprights by locating the notch on the bottom side with with cross bar of the log grate. Then install the medium sized straight twig between the center and right side log grate upright by locating the notch on the bottom side with the log grate cross bar. The top of the twig will rest on the middle ember bed twig

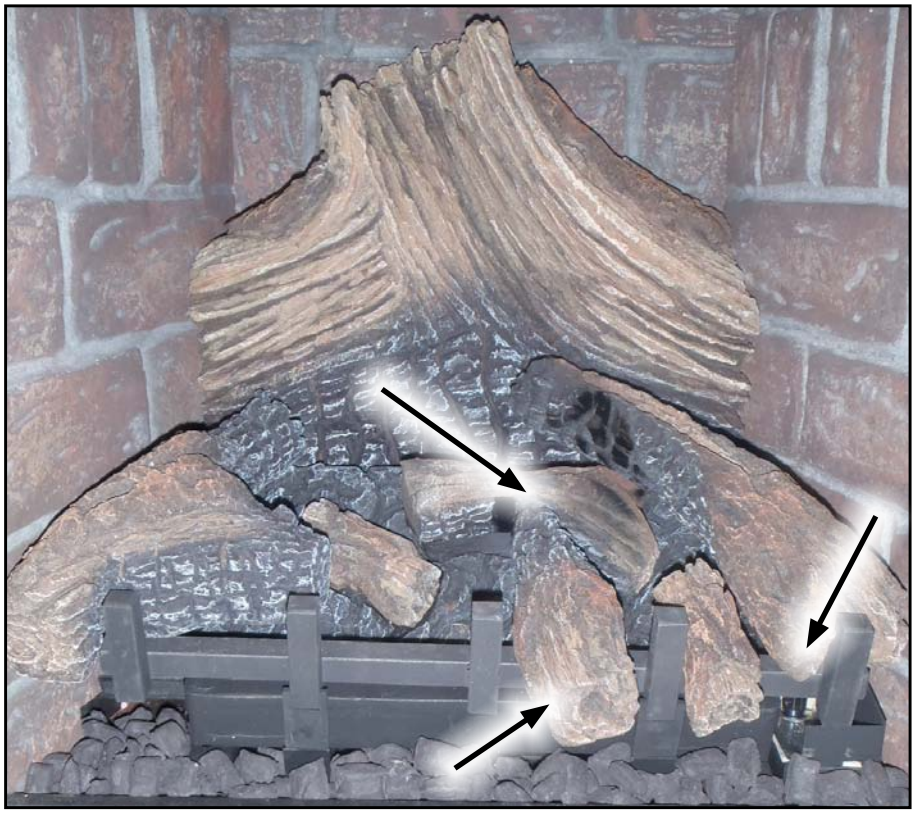

**Figure 39. Fourth Stage Log Set Installation.**

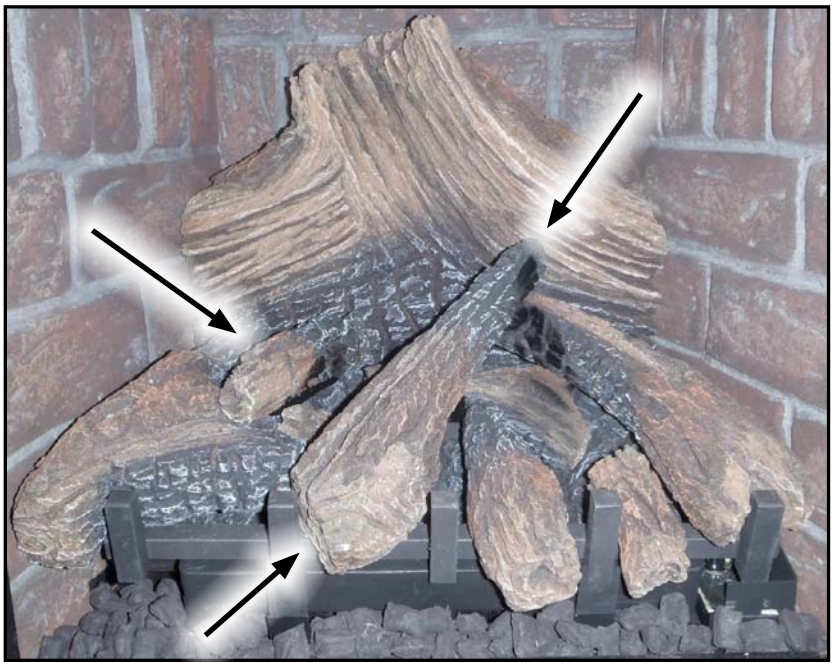

**Figure 40. Complete log set-up with embers.**

**Step 5**: Finally, install the large straight twig between the center and left side log grate upright by locating the notch on the bottom side with the log grate cross bar. The top of the twig will rest on top of the far right curved twig. The last remaining straight twig gets intalled by locating the front in the crook of the far left y shaped twig and the back notch rests on the top edge of the ember bed.

Figure 41: The S20 burning with a good flame.

NOTE: While the glass is still removed, it is recommended that the gas line be purged by lighting the pilot.

When lighting the fireplace for the first time since the log set and embers have been installed/replaced, watch for ignition at ALL the burner ports. If a long delay is noticed, turn the appliance off and wait for it to cool down. Then remove the glass and make sure none of the burner ports are blocked.



**Figure 41. S20 complete log set-up with coal nuggets burning.**

**Maintenance:** Once a year, the logs should be removed and checked for deterioration or large amounts of soot. A small amount on the bottom side of the logs is normal. Remove and replace the logs in the same manner described above.

If new coal nuggets or logs are required, contact your nearest ENVIRO dealer.

**Never operate the fireplace with the glass door removed.**

## Safety Screen Replacement:

The S20 is supplied with a safety screen already installed on the back of the cast door. If the safety screen becomes damaged must be replaced with part number 50-3219 following the steps below:

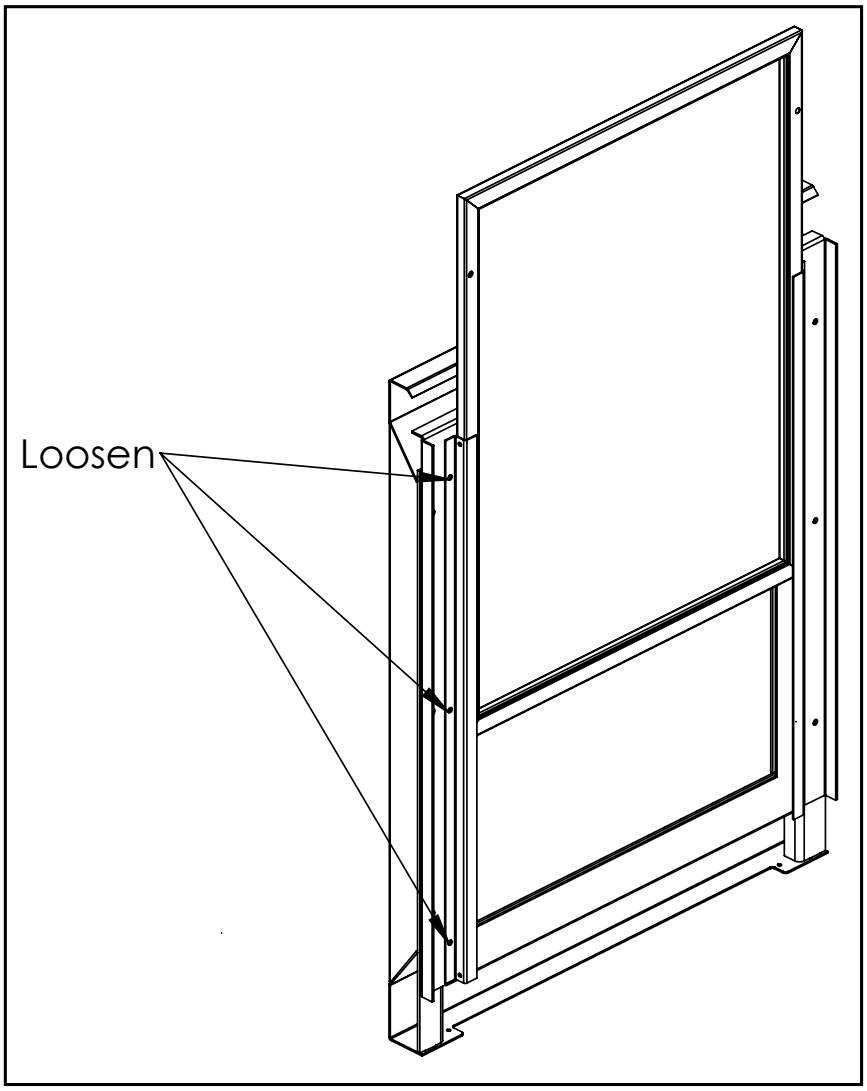


**Figure 42. Safety Screen Removal**

**Step 1**: Turn off the S20 and allow it to fully cool down.

**Step 2**: Remove the S20 Face as instructed in the Maintenance and Service - Face Removal section.

**Step 3**: Loosen the screws on the brackets securing the Screen.

**Step 4**: Once all the screws are loose the screen should slide up and out.

# Trouble Shooting

| Problem | Possible Cause | Solution |
|---|---|---|
| The main burner does not ignite when called for. | The gas valve may not be on. | • Check that the gas control knob is in the "ON" position. |
| | Thermostat is not calling for heat. | • Adjust the thermostat several degrees above ambient temperature. |
| | Problem with gas valve. | • Use a DC voltmeter to measure the voltage across the TPTH and TP terminals. Main operator voltage: Open circuit ≥ 325mV Closed circuit ≥ 100mV<br>• If voltage is not present, check the control circuit for proper operation.<br>• If proper control system voltage is present, replace the gas control. |
| Spark will not light the pilot after repeatedly pressing the spark ignitor. | Defective piezo ignitor. | • Check connections to ignitor.<br>• If ignitor connections are good but no spark, replace ignitor. |
| | Broken spark electrode. | • Check for broken ceramic insulation, replace electrode if broken. |
| | Misaligned spark electrode. | • If spark is not arcing from electrode to pilot, loosen the screws on the pilot base adjust and tighten. |
| Pilot will not remain lit. | Problem with thermocouple circuit. | • Check for proper connection of the thermocouple to the rear of the valve. If loose, fully tighten.<br>• Check pilot for full flame impingement around thermocouple. If flame is too small, check gas pressure, adjust pilot rate screw, check pilot head for damage.<br>• Check thermocouple voltage at valve. It must be greater than 5 mV. If low, replace thermocouple. |
| | Air in gas line (pilot dies while knob is depressed). | • Bleed line.<br>• Check gas line pressure.<br>• Contact dealer. |
| Burners will not remain lit. | Problem with thermopile circuit. | • Check gas line pressure .<br>• Check for flame impingement on thermopile. If low, see "Pilot will not remain lit".<br>• Check thermopile for minimum of 300 mV when burner is switched on.<br>• Check wiring to thermostat for breaks. |
| Flame lifting | Leak in vent pipe | • Check for leaks in vent connections. |
| | Improper vent configuration | • Check vent configuration with manual. |
| | Terminal may be recirculating flue gases | • Check to see if terminal is on correctly.<br>• May need to install high wind termination cap.<br>• Contact dealer. |
| Glass fogs up | Normal Condition: after the appliance warms up the glass will clear.<br>**Due to additives in gas, glass may get hazy during operation** Clean as needed. | |
| Blue Flames | Normal during start up: flames will yellow as the fireplace heats up. | |
| Flames are burning "dirty" or sooting | Flame impingement | • Check log positioning.<br>• Increase primary air by opening the venturi shutter and/ or by opening the vent restrictor.<br>See also "Burners will not remain lit." |
| Remote control doesn't work | Problem with the remote | • One or more of the batteries are dead. See remote control instructions. |
| | Problem with fireplace | • The on/off switch is turned to OFF.<br>• The gas control valve is turned to PILOT or OFF.<br>• The pilot has gone out. |

# Parts List

| Reference Number | Part Description | Part Number |
|---|---|---|
| 1 | Door Release Tool | 50-2510 |
| 2 | Door Latch Mechanism w/ Spring (set of 2) | 50-1285 |
| 3 | Firebox Air Restrictors (set of 2) | 50-2988 |
| 4 | Log Burner Pilot Shield | 50-2991 |
| 5 | 120 Ceramic Fan Temperature Sensor | EC-001 |
| 6 | Convection Fan only | 50-2493 |
| 7 | FPI Fan Controller (69.5V) 115V W/FS Knob | EC-039A |
| 8 | Fan Controller Knob W/Decal | EC-040 |
| 9 | S.I.T. Piezo Ignitor | EC-023 |
| 10 | FPI Burner Switch | EC-026 |
| 11 | S.I.T. Pilot Assembly - Standing Pilot | EC-015 |
| 12 | Pilot Assembly Gasket | EC-021 |
| 13 | S.I.T. Nova Valve - Convertible | 50-1421 |
| 14 | Heyco Strain Relief | EC-044 |
| 15 | Domestic Power Cord (115v) | EC-042 |
| 16 | Burner | 50-2992 |
| 17 | Log Grate | 50-2997 |
| 18 | Door Glass w/ Gasket (19.75 x 17.5in) | 50-2998 |
| 19 | S20 Door Complete | 50-3093 |
| 20 | Ceramic Fluted Liner Set (3 pieces) | 50-3216 |
| 21 | S20 Face | 50-3217 |
| 22 | S20 Vent Cover | 50-3218 |
| 23 | S20 Vent Collar | 50-3222 |
| 24 | S20 Replacement Safety Screen | 50-3219 |
| 25 | S20 Plate Top | 50-3223 |
| - | Log Set | 50-2935 |
| - | S20 Owners Manual | 50-3220 |
| - | Conversion Kit - LP to NG (Nova) | 50-2993 |
| - | Conversion Kit - NG to LP (Nova) | 50-2983 |
| - | 12 oz. Can of Metallic Black Touch Up Paint | PAINT-12-MB |

# Parts Diagram

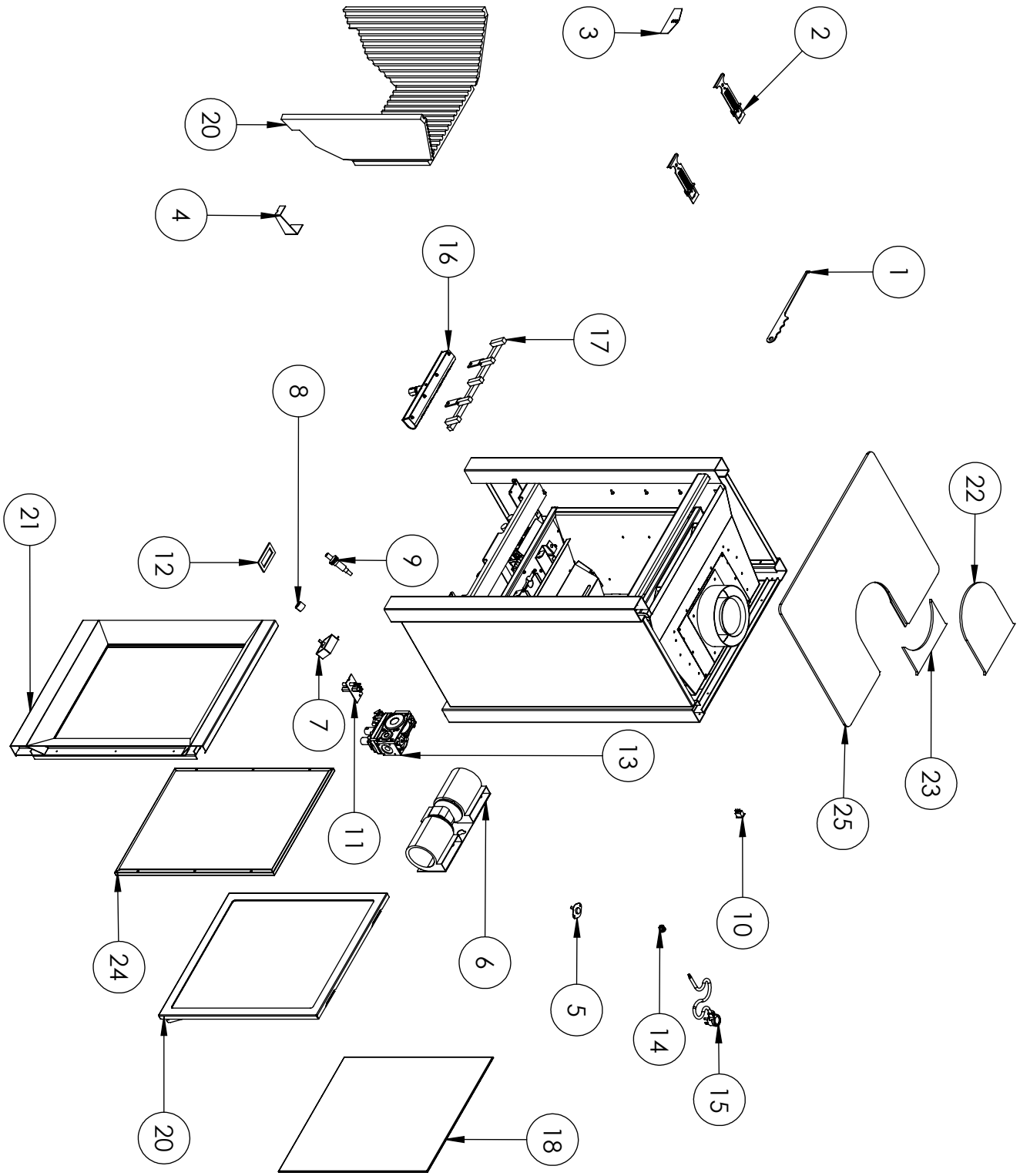

CONFORMS TO / Conforme : ANSI Z21.88-2014, CERITIFIED TO / Agréé : CSA 2.33-2014 VENTED GAS FIREPLACE HEATERS / APPAREIL DE CHAUFFAGE À ÉVACUATION DIRECTE, CAN/CGA 2.17-M91 (R2014) GAS FIRED APPLIANCES FOR HIGH ALTITUDES / APPAREIL AU GAZ POUR HAUTES ALTITUDES. This appliance equipped only for altitudes 0-2000 feet (0-610 m). In Canada 0-4500 feet (1370 m) / Cet appareil peut être utilisé à des altitudes comprises entre 0 et 610 mètres (0 et 2000 pieds) seulement. En Canada 0 et 1370 mètres (0-4500 pieds). For use only with barriers Part Numbers 50-3070. Follow installation instructions / Utiliser uniquement avec l'écran no 50-3070. Suivre les instructions d'installation.

**DO NOT REMOVE THIS LABEL / NE PAS ENLEVER CETTE ÉTIQUETTE**
**LISTED GAS FIREPLACE HEATER /** LISTE DES APPAREILS AU GAZ VENTILÉS

**Model /** Modèle: ☐ S20 (Nova Log Burner) ☐ S20I (IPI Log Burner)

**Fuel /** Carburant: ☐ NAT (Gaz naturel) ☐ LPG (Propane)

**Serial No. / No. De Serié:** DV

Enviro®

C ETL LISTED US
Intertek
**4001609**
Certified for use in Canada & USA / Certifié pour installation au Canada et aux Etats-Unis.

**Vented Gas Fireplace Heater - Not for Use with Solid Fuel**
**Foyer au gaz à évacuation. Ne pas utiliser avec du combustible solide.**

**CAUTION/ATTENTION**: Do not operate the appliance with glass removed, cracked or broken. Replacement of the panel should be done by a licensed of qualified service person / Ne pas faire fonctionner l'appareil avec un verre enlevée, fissurée ou cassée. Remplacement du panneau doit être effectuée par une personne de service certifié ou qualifié.

**CAUTION/ATTENTION**: Hot while in operation. Do not touch. Severe burns may result. Keep children, clothing, furniture, gasoline and other liquids having flammable vapours away / Chaud pendant le fonctionnement. Ne touchez pas. Des brûlures graves peuvent en résulter. Gardez les enfants, les vêtements, meubles, essence et autres liquides ayant des vapeurs inflammables loin.

Keep burner and control compartment clean. See installation and operating instructions accompanying appliance / S'assurer que le brûleur et le compartiment des commandes sont propres. Voir les instructions d'installation et d'utilisation qui accompagnent l'appareil.

**CLEARANCES TO COMBUSTIBLES / CLAIRANCE DES COMBUSTIBLES:**
All Models Minimum Alcove / tous les modèles alcôve minimum:
From Sides / partir de côtés: 8" (273mm)
From Back / de l'arrière: 4" (101.6mm)
From Top / de haut: 12.0" (304.8mm)
Floor / étage: N/A

| | NAT (Gaz naturel) | LPG (Propane) |
|---|---|---|
| INPUT (ENTRÉE À) at 0-4500 feet/pied (0-1372 m): | MAX: 20,000 Btu/hr (5.86 kWh)<br>MIN: 13,600 Btu/hr (3.98 kWh) | MAX: 18,500 Btu/hr (5.42 kWh)<br>MIN: 14,500 Btu/hr (4.25 kWh) |
| MANIFOLD PRESSURE (PRESSION DES CONDUITS): | MAX: 3.5 inch W.C. (0.87 kPa)<br>MIN: 1.5 inch W.C. (0.37 kPa) | MAX: 10 inch W.C. (2.49 kPa)<br>MIN: 6.4 inch W.C. (1.59 kPa) |
| GAS SUPPLY PRESSURE (PRESSION D'APPROVISIONNEMENT DU GAZ): | MAX: 7 inch W.C. (1.74 kPa)<br>MIN: 4.5 inch W.C. (1.12 kPa) | MAX: 11 inch W.C. (2.74 kPa)<br>MIN: 10.4 inch W.C. (2.59 kPa) |
| ORIFICE SIZE (GROSSEUR DE L'ORIFICE): | # 46 | 1.2 mm |

**VENT PIPE CLEARANCES**: See manufacturer's listing, label and installation instructions. May be installed in a bedroom or bedsitting room (IN CANADA a listed wall thermostat). The total vent length must be between 7in (17.7cm) and 44ft (13.4m). This appliance must be properly connected to a venting system in accordance with the manufacturer's installation instructions. If any of the venting is disassembled after installation, it must be properly resealed according to the instructions in the owners manual. This appliance must be installed in accordance with local codes, if any; if none, follow the National Fuel Gas Code, ANSI Z223.1/NFPA 54, or Natural Gas and Propane Installation Codes, CSA B149.1. This vented gas fireplace heater is not for use with air filters. FOR USE WITH GLASS DOORS CERTIFIED WITH THE APPLIANCE ONLY. This appliance is only for use with the type of fuel indicated on this rating label. See owner's manual for details. This appliance is not convertible for use with other gases, unless a certified kit is used. Keep burner and control compartment clean. See installation and operating instructions accompanying appliance. . WARNING: Failure to install this appliance per the manufacturer's instructions or failure to use only parts specifically approved with this appliance may result in property damage or personal injury. WARNING: Do not operate the appliance until all sections have been assembled and installed in accordance with the manufacturers instructions. This model can be vented with approved 4" x 6 ⅝" galvanized or stainless steel solid vent. CLAIRANCE DES TUYAUX DE VENTILATION: Consultez les listes, les étiquettes et les instructions d'installation du manufacturier. Ces appareils peuvent être installés dans une chambre à coucher (au CANADA avec thermostat mural). La longueur totale du conduit doit être comprise entre 7 pouces (17.7cm) et 44 pieds (13.4m). Pour une installation dans un âtre ventilé et composé de matériaux non combustibles. Si aucun code n'existes, utilisez les codes ci-inclus : CAN/CGA B149 au Canada ou ANSI Z223.1 / NFPA 54 aux États-Unis. Cet appareil au gaz ne doit pas être utilisé avec des filtres à air. POUR UTILISATION UNIQUEMENT AVEC LES PORTES EN VERRE CERTIFIÉES AVEC L'APPAREIL. Les appareils de chauffage à évacuation direct ne doivent pas être utilisés avec des carburants solides. Utilisez seulement des portes vitrées approuvées pour cet appareil. AVERTISSEMENT: Si vous installez cet appareil selon les instructions du fabricant ou de l'échec d'utiliser seulement les pièces spécifiquement approuvé avec cet appareil peut entraîner des dommages matériels ou corporels.Cet appareil doit être utilisé seulement avec le type de carburant mentionné et requis sur l'étiquette de classification de cet appareil. Consultez le guide du propriétaire pour plus de détails. Cet appareil ne peut être converti pour utilisation avec d'autres gaz que celui mentionné sur l'étiquette de classification, sauf si une trousse de conversion certifiée est utilisée. AVERTISSEMENT: Ne faites pas fonctionner l'appareil tant que toutes les pièces et les sections ne soient pas assemblées et/ou installées en concordance avec les instructions du manufacturier. Ce modèle peut être évacué avec approuvé 4"x 6 ⅝" partie galvanisé ou en acier inoxydable solide évent.

**ELECTRICAL REQUIREMENTS / BESOINS ÉLECTRIQUES:** 115 V AC, 60 Hz, 0.9 Amp (fan type vented circulator, Sherwood Industries Ltd Part #50-2493 / Ventilateur de type cage d'écureuil, Les Industries Sherwood Ltée. Pièce #50-2493

**WARNING/AVERTISSEMENT**: Fire or explosion hazard. Can cause property damage, severe injury, or death. This is a fast-acting thermocouple. Replace it only with another fast-acting thermocouple specified by the manufacturer. Refer to the manual for the part number / Risque d'incendie ou d'explosion. Peut entraîner des dommages matériels, des blessures graves ou la mort. Ceci est un thermocouple rapide. Peut être remplacé uniquement par un autre thermocouple rapide spécifié par le fabricant de l'appareil. Veuillez consulter à la notice pour le numéro de pièce

## ⚠ DANGER

**VITRE CHAUDE –** RISQUE DE BRÛLURES.

**NE TOUCHEZ PAS** UNE VITRE NON REFROIDIE.

**NE LAISSEZ JAMAIS** UN ENFANT TOUCHER LA VITRE.



**HOT GLASS** WILL CAUSE BURNS

**DO NOT TOUCH** GLASS UNTIL COOLED.

**NEVER** ALLOW CHILDREN TO TOUCH GLASS.

L'écran pare-étincelles fourni avec ce foyer réduit le risque de brûlure en cas de contact accidentel avec la vitre chaude et doit être installé pour la protection des enfants et des personnes à risques.

A barrier designed to reduce the risk of burns from the hot viewing glass is provided with this appliance and shall be installed for the protection of children and other at-risk individuals.

SAMPLE

MANUFACTURED BY / FABRIQUE PAR: SHERWOOD INDUSTRIES LTD. 6782 OLDFIELD ROAD, SAANICHTON, BC CANADA

MADE IN CANADA / FABRIQUE AU CANADA

**DATE OF MANUFACTURE / DATE DE FABRICATION:**

J F M A M J J A S O N D 2016 2017 2018 2019 2020

C-14815

# Notes

# Notes

# Warranty for Enviro **Gas** Products

Sherwood Industries Ltd. ("Sherwood") hereby warrants, subject to the terms and conditions herein set forth, this product against defects in material and workmanship during the specified warranty period starting from the date of original purchase at retail. In the event of a defect of material or workmanship during the specified warranty period, Sherwood reserves the right to make repairs or to assess the replacement of a defective product at Sherwood's factory. The shipping costs are to be paid by the consumer. All warranties by Sherwood are set forth herein and no claim shall be made against Sherwood on any oral warranty or representation.

**Conditions**

- A completed warranty registration must be submitted to Sherwood within 90 days of original purchase via the online warranty registration page or via the mail-in warranty registration card provided. Have the installer fill in the installation data sheet in the back of the manual for warranty and future reference.
- This warranty applies only to the original owner in the original location from date of install.
- The unit must have been properly installed by a qualified technician or installer, and must meet all local and national building code requirements.
- The warranty does not cover removal and re-installation costs.
- Sherwood Industries Ltd. reserves the right to make changes without notice.
- Sherwood Industries Ltd. and its employees or representatives will not assume any damages, either directly or indirectly caused by improper usage, operation, installation, servicing or maintenance of this appliance.
- A proof of original purchase must be provided by you or the dealer including serial number.
- This warranty does not cover any discoloration of the safety screen mesh.

**Exclusions**

An expanded list of exclusions is available at www.enviro.com/help/warranty.html

This warranty does not cover:

- Damage as a result of improper usage or abuse.
- Damage caused from over-firing due to incorrect setup or tampering.
- Damage caused by incorrect installation.

**To the Dealer**

- Provide name, address and telephone number of purchaser and date of purchase.
- Provide date of purchase. Name of installer and dealer. Serial number of the appliance. Nature of complaint, defects or malfunction, description and part # of any parts replaced.
- Pictures or return of damaged or defective product may be required.

**To the Distributor**

- Sign and verify that work and information are correct.

**Sherwood Industries Ltd.**
6782 Oldfield Road, Victoria, BC . Canada V8M 2A3
Online warranty registration: www.enviro.com/warranty/

| Category | One Year | Two Year | Limited Lifetime (7yr) |
|---|---|---|---|
| Parts [1] (unit serial number required) | | ✔ | |
| Firebox Liner Panels (excluding porcelain) | | Ceramic | Steel |
| Firebox | | | ✔ |
| Heat Exchanger | | | ✔ |
| Burner | | | ✔ |
| Ceramic Logs [2] | | | ✔ |
| Ceramic Glass [3] | ✔ | | |
| Pedestal / Legs (excluding finish) | | | ✔ |
| Door Assembly | | | ✔ |
| Surround Panels (excluding finish) | | | ✔ |
| Exterior Panels (excluding finish) | | | Up to 5 years |
| Electrical Components | | ✔ | |
| Exterior Surface Finishing [4] | ✔ | | |
| Labour | ✔ | | |

[1] Whereas warranty has expired, replacement parts will be warrantied for 90 days from part purchase date. Labour not included. Unit serial number required.

[2] Log set and panels excludes wear and tear or breakage caused by cleaning or service.

[3] Glass is covered for thermal breakage. Photos of box, inside of door, and unit serial # must be supplied for breakage due to shipping.

[4] Exterior Surface finishing covers plating, enamel or paint and excludes colour changes, chipping, and fingerprints.

Travel costs not included.

Dec 2014

# Installation Data Sheet

The following information must be recorded by the installer for warranty purposes and future reference.

NAME OF OWNER:

_____

ADDRESS:

_____

_____

_____

PHONE:_____

NAME OF DEALER:

_____

ADDRESS:

_____

_____

_____

PHONE:_____

MODEL:_____

SERIAL NUMBER:_____

DATE OF PURCHASE: _____ (dd/mm/yyyy)

DATE OF INSTALLATION:_____(dd/mm/yyyy)

☐ NATURAL GAS (NAT) ☐ PROPANE(LPG)

INLET GAS PRESSURE:_____in wc

MAIN BURNER ORIFICE:_____# DMS

PILOT ORIFICE #_____OR_____in diam.

INSTALLER'S SIGNATURE:

_____

NAME OF INSTALLER:

_____

ADDRESS:

_____

_____

_____

PHONE:_____

MANUFACTURED BY:
SHERWOOD INDUSTRIES LTD.
6782 OLDFIELD RD. SAANICHTON, BC, CANADA V8M 2A3
www.enviro.com
February 24, 2016
C-14861