WARRANTY REGISTRATION
enviro.com/warranty

EG31

GAS FIREPLACE INSERT - NOVA

OWNER'S MANUAL



WARNING: If the information in this manual is not followed exactly, a fire or explosion may result causing property damage, personal injury or loss of life. Installation and service must be performed by a qualified installer, service agency or the gas supplier.

Version Française: www.enviro.com/fr.html

EG31-118

Safety Precautions

WARNING:

FIRE OR EXPLOSION HAZARD

Failure to follow safety warnings exactly could result in serious injury, death, or property damage.

- Do not store or use gasoline or other flammable vapors and liquids in the vicinity of this or any other appliance.

- WHAT TO DO IF YOU SMELL GAS

- **Do not try to light any appliance.**
- **Do not touch any electrical switch; do not use any phone in your building.**
- **Leave the building immeadiately.**
- **Immeadiately call your gas supplier from a neighbor's phone. Follow the gas supplier's instructions.**
- **If you cannot reach your gas supplier, call the fire department.**

- Installation and service must be performed by a qualified installer, service agency or the gas supplier.

INSTALLER:
Leave this manual with the appliance.

CONSUMER:
Retain this manual for future reference.

This appliance may be installed in an after-market permanently located, manufactured (mobile) home, where not prohibited by local codes.

This appliance is only for use with the type of gas indicated on the rating plate. This appliance is not convertible for use with other gases, unless a certified kit is used.

Massachusetts installations (Warning): This product must be installed by a licensed plumber or gas fitter when installed within the Commonwealth of Massachusetts. Other Massachusetts code requirements: Flexible connector must not be longer than 36in., a shut off valve must be installed; only direct vent sealed combustion products are approved for bedrooms/bathrooms. A carbon monoxide detector is required in all rooms containing gas fired direct vent appliances. The fireplace damper must be removed or welded in the open position prior to installation of a fireplace insert.

Safety Precautions

FOR SAFE INSTALLATION AND OPERATION OF YOUR "ENVIRO" HEATER, PLEASE CAREFULLY READ THE FOLLOWING INFORMATION:

• All ENVIRO gas-fired appliances must be installed in accordance with their instructions. Carefully read all the instructions in this manual first. Consult the building authority having jurisdiction to determine the need for a permit prior to commencing the installation.

• **NOTE:** Failure to follow these instructions could cause a malfunction of the fireplace, which could result in death, serious bodily injury, and/or property damage.

• Failure to follow these instructions may also void your fire insurance and/or warranty.

GENERAL

• Installation and repair should be done by a qualified service person. The appliance should be inspected before the first use and, at least, annually by a qualified service person. More frequent cleaning may be required due to excessive lint from carpeting, bedding material, etc. It is imperative the control compartments, burners and circulating air passageways of the appliance be kept clean.

• Due to high temperatures, the appliance should be located out of high traffic areas and away from furniture and draperies.

Children and adults should be alerted to the hazards of high surface temperatures and should stay away to avoid burn or clothing ignition.

• Young children should be carefully supervised when in the same room as the appliance. Toddlers, young children and others may be susceptible to accidental contact burns. A physical barrier is recommended if there are at risk individuals in the house. To restrict access to a fireplace or stove install an adjustable safety gate to keep toddlers, young children and other at risk individuals out of the room and away from hot surfaces. Any safety screen, guard, or barrier removed for servicing an appliance must be replaced prior to operating the appliance.

• Clothing or other flammable materials should not be placed on or near the appliance.

DANGER



HOT GLASS WILL CAUSE BURNS

DO NOT TOUCH GLASS UNTIL COOLED.

NEVER ALLOW CHILDREN TO TOUCH GLASS.

A barrier designed to reduce the risk of burns from the hot viewing glass is provided with this appliance and shall be installed for the protection of children and other at-risk individuals.

• A barrier designed to reduce the risk of burns from the hot veiwing glass is provided with this appliance and shall be installed for the protection of children and other at-risk individuals. If the barrier becomes damaged, the barrier shall be replaced with the manufacturer's barrier for this appliance

FOR YOUR SAFETY

• Installation and service must be performed by a qualified installer, service agency or gas supplier.

• This installation must conform to local codes or, in the absence of local codes, with the National Fuel Gas Code, ANSI Z223.1/NFPA 54, or the Natural Gas and Propane Installation Code, CSA B149.1.

• To prevent injury, do not allow anyone who is unfamiliar with the stove to operate it.

• To prevent injury, if the pilot or pilot and burners have gone out on their own, open the glass door and wait 5 minutes to air out before attempting to re-light the stove.

• Always keep the area around these appliances clear of combustible material, gasoline and other flammable liquids and vapours.

• These appliances should not be used as a drying rack for clothing or for hanging Christmas stockings/decorations.

• Due to the paint curing on the stove, a faint odor and slight smoking will likely be noticed when the stove is first used. Open a window until the smoking stops.

Always connect this gas stove to a vent system and vent to the outside of the building envelope. Never vent to another room or inside the building. Make sure the specified vent pipe is used, properly sized and of adequate height to provide sufficient draft. Inspect the venting system annually for blockage and signs of deterioration.

WARNING: Failure to position the parts in accordance with the diagrams in this booklet, or failure to use only parts specifically approved with this appliance, may result in property damage or personal injury.

WARNING: Do not operate with the glass front removed, cracked or broken. Replacement of the glass should be done by a licensed or qualified service person.

• Never use solid fuels such as wood, paper, cardboard, coal, or any flammable liquids, etc., in this appliance.

• Do not use this appliance if any part has been under water. Immediately call a qualified service technician to inspect the appliance and to replace any part of the control system or any gas control which has been under water.

• Do not abuse the glass by striking it or slamming the door shut.

• If the EG31 unit is pulled out of its installation, and the vent-air intake system is disconnected for any reason, ensure that the vent-air intake pipes are reconnected and re-sealed in accordance to the instructions noted in INITIAL INSTALLATION - VENTING FIREPLACE INSERTS.

Table of Contents

Safety Precautions....2
Table of Contents....4
Codes And Approvals....5
Specifications....6
- Rating Label Location....6
- Dimensions....6
- Install Depth....6

Operating Instructions....7
- Lighting Instructions....7
- Adjusting Venturi Air Settings....8
- Blower speed....8
- Normal Sounds During Operation....8

Maintenance And Service....9
- Routine Maintenance....9
- Glass Door Removal....9
- Cleaning The Glass....9
- Cleaning The Firebox....9
- Replacing the Glass....10
- Cleaning Painted Surfaces....10
- Burner and Blower Removal....10
- Fuel Conversion....11

Initial Installation....14
- Clearances to Combustibles....14
- Minimum Fireplace Size....14
- Direct Vent Model....15
- Direct Vent Restrictor Ring....15
- Venting Fireplace Inserts....15
- Automatic Flue Gas Spill Switch....17
- Direct Vent Vertical Vent Termination....18
- B Vent Model....19
- Converting A Direct Vent Fireplace To A B-Vented Fireplace....19
- Converting A B-Vent Fireplace To A Direct Vented Fireplace....19
- Preparing Your EG31 For Installation....20
- Zero Clearance (ZC) Fireplace Installation....21
- Electrical Requirements....22
- Gas Line Connection & Testing....23
- Adjusing the Pilot Flame....24

Secondary Installation....25
- Extension Bracket Removal....25
- Safety Screen Installation....26
- Surround Panel Installation....27
- Log Set and Ember Installation....28
- Brick Panel Installation....29

Trouble Shooting....30
Parts List - Components....31
Parts Diagram - Body....33
Notes....34
Warranty....35
Installation Data Sheet....36

Codes And Approvals

DIRECT VENT: This type is identified by the suffix DV. This appliance draws all of its air for combustion from outside the dwelling, through a specially designed vent pipe system.

This appliance has been tested and approved for installations from 0 feet to 4500 feet (1372 m) above sea level.

In the USA: The appliance may be installed at higher altitudes. Please refer to your American Gas Association guidelines which state: the sea level rated input of Gas Designed Appliances installed at elevations above 2000 (610 m) feet is to be reduced 4% for each 1000 feet (305 m) above sea level. Refer also to local authorities or codes which have jurisdiction in your area regarding the de-rate guidelines.

In Canada: When the appliance is installed at elevations above 4500 feet (1372 m), the certified high altitude rating shall be reduced at the rate of 4% for each additional 1000 feet (305 m).

- This appliance has been tested by INTERTEK (Warnock Hersey) and found to comply with the established VENTED GAS FIREPLACE HEATER standards in CANADA and the USA as follows:

VENTED GAS FIREPLACE HEATER (EG31 DV; NG/LPG)

TESTED TO: ANSI Z21.88-2014/CSA 2.33-2014 VENTED GAS FIREPLACE HEATERS

CAN/CGA 2.17-M91 GAS FIRED APPLIANCES FOR HIGH ALTITUDES

CSA P.4.1-02 TESTING METHOD FOR MEASURING ANNUAL FIREPLACE EFFICIENCY

This ENVIRO EG31 Fireplace:

- Has been certified for use with either natural or propane gases. (See rating label.)
- Is not for use with solid fuels.
- Is approved for bedroom or bed sitting room. (**IN CANADA**: must be installed with a permanent wall thermostat for bedroom installations is required. Consult the authority having local jurisdiction in your area. **IN USA**: see current ANSI Z223.1 for installation instructions.)
- Must be installed in accordance with local codes. If none exist, use current installation code CAN/CGA B149 in Canada or ANSI Z223.1/NFPA 54 in the USA.
- Must be properly connected to an approved venting system and not connected to a chimney flue serving a separate solid-fuel burning appliance.
- Is not approved for closet or recessed installations.

IMPORTANT NOTICE (Regarding first fire up): When the unit is turned on for the first time, it should be turned onto high without the fan on for the first 4 hours. This will cure the paint, logs, gasket material and other products used in the manufacturing process. It is advisable to open a window or door, as the unit will start to smoke and can irritate some people. After the unit has gone through the first burn, turn the unit off, let the unit get cold then remove the glass door and clean it with a good gas fireplace glass cleaner, available at your local ENVIRO dealer. See "Door Removal" and "Cleaning The Glass" sections.

NATIONAL FIREPLACE INSTITUTE®

NFI

CERTIFIED

www.nficertified.org

We recommend that our gas hearth products be installed and serviced by professionals who are certified in the U.S. by the National Fireplace Institute® (NFI) as NFI Gas Specialists.

Specifications

Rating Label Location:

The rating label is located under the control panel and is attached to a rectangular metal sheet that is chained to the fireplace.

Dimensions:

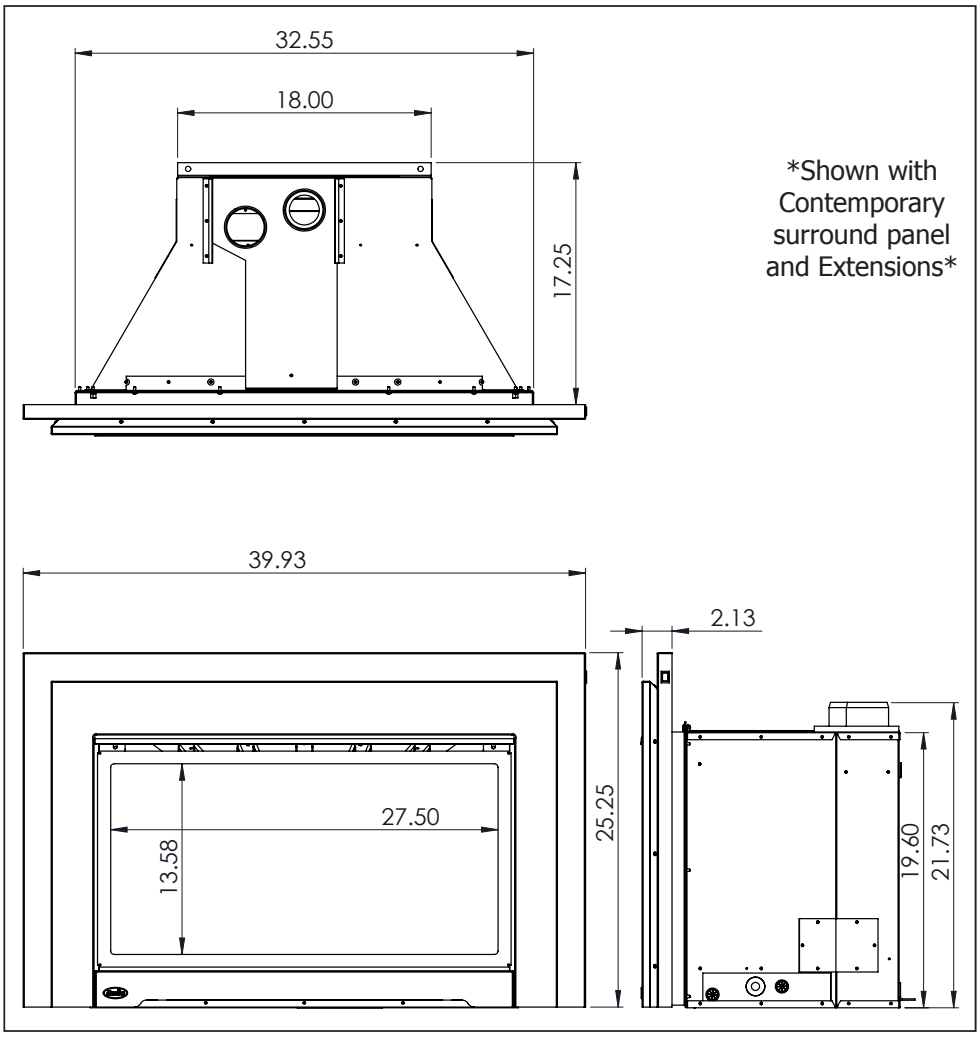

Figure 1: EG31 Exterior Dimensions.

Install Depth:

The available install depth for an EG31-S unit is 17.25". It is possible to get a smaller install depth by removing the extensions, but in doing so the safety screen will protrude out from in front of the surround panel. The table below shows what install depths are need for each surround panel.Refer to Secondary Installation pages 29-31 for instructions.

Extensions		No Extensions	
Surround Panel	Install Depth	Surround Panel	Install Depth
Contemporary	17.25 in	Contemporary	15.00 in
Cape Cod	18.00 in	Cape Cod	15.75 in

Table 1. EG31-S Install Depths.

Operating Instructions

For Your Safety, Read Safety Precautions And Lighting Instructions Before Operating

WARNING: IF YOU DO NOT FOLLOW THESE INSTRUCTIONS EXACTLY A FIRE OR EXPLOSION MAY RESULT, CAUSING PROPERTY DAMAGE, PERSONAL INJURY OF LOSS OF LIFE.

LIGHTING INSTRUCTIONS:

CAUTION: Hot while operating. Do not touch, severe burns may result. Keep children, clothing, furniture, gasoline or other flammable vapors away.

CAUTION: Do not operate this fireplace with the glass removed, cracked or broken. Replacement of the panel(s) should be done by a licensed or qualified person! This appliance needs fresh air for safe operation and must be installed with provisions for combustion and ventilation air. See installation and operating instructions manual. Keep burner and control compartment clean.
WARNING: Improper installation, adjustment, alteration, service or maintenance can cause injury or property damage, or loss of life. Refer to owner's information manual provided with this appliance. For assistance or additional information consult a qualified installer, service agency or the gas supplier. See installation and operating instructions accompanying appliance. Installation and service must be performed by a qualified installer, service agency, or the gas supplier.

FOR YOUR SAFETY READ BEFORE OPERATING

WARNING: IF YOU DO NOT FOLLOW THESE INSTRUCTIONS EXACTLY, A FIRE OR EXPLOSION MAY RESULT CAUSING PROPERTY DAMAGE, PERSONAL INJURY OR LOSS OF LIFE.

A) This appliance is equipped with a pilot, which must be lit by hand by following these instructions exactly.
B) BEFORE LIGHTING smell all around the appliance area for gas and next to the floor because some gas is heavier than air and will settle on the floor.
WHAT TO DO IF YOU SMELL GAS:
Do not try to light any appliance. Do not touch any electrical switch: do not use any phone in your building. Immediately call your gas supplier from a neighbor's phone. Follow the gas suppliers instructions. If you cannot reach your gas supplier, call the fire department.
C) Use only your hand to push in or turn the gas control knob; NEVER use tools. If the knob will not push in or turn by hand, do not try to repair it. Call a qualified service technician. Force or attempted repair may result in a fire or explosion.
D) Do not use this appliance if any part has been under water. Immediately call a qualified service technician to inspect the appliance and to replace any part of the control system and any gas control which has been under water.

LIGHTING INSTRUCTIONS

1. STOP! Read the safety information above on this label.
2. Turn off all electrical power to this appliance.
3. Turn off the gas control knob clockwise ↷ to the off position.
4. Open door. Wait flve (5) minutes to clear out any gas. Close door. If you smell gas STOP! Follow "B" in the above safety information. If you do not smell gas go to the next step.
5. Find pilot-located to the left under the front log. Turn the gas control knob counter-clockwise ↶ to "PILOT". Push the gas control in fully and hold, keep knob depressed for about 30 seconds after the pilot is lit. Release knob. If pilot goes out, repeat steps 4 through 5.

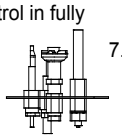

WARNING: this gas valve has a lockout device, which will not allow the pilot burner to be relit until the thermocouple has cooled. If the knob does not pop up when released, stop and immediately call your service technician or gas supplier.
If the pilot does not stay lit after several tries, turn the gas control knob to "OFF" and call your service technician or gas supplier.
6. Turn the gas control knob counter clockwise ↶ to the "ON" position. Flip the burner switch to "ON" THEN TURN THE "HI/LOW" knob to the desired setting.
7. Turn on the electrical power to the unit.

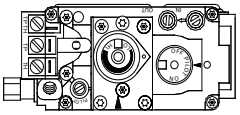

TO TURN OFF GAS TO APPLIANCE

1. Flip burner switch to "OFF"
2. Turn the gas control knob clockwise ↷ to the "OFF" position.
3. Turn off all electrical power to the appliance if service is to be performed.

C-10489

Figure 2. Lighting Instruction Label

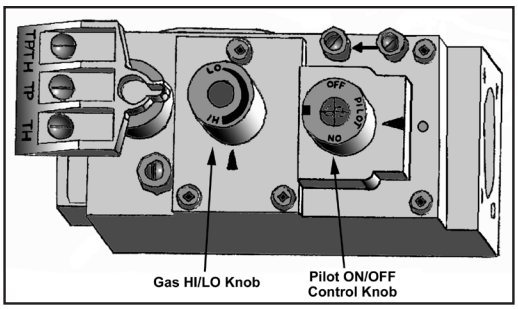

Figure 3: Gas Valve.

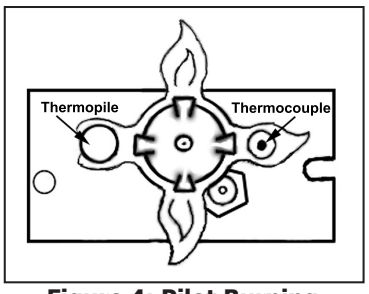

Figure 4: Pilot Burning.

Operating Instructions

Adjusting Venturi Air Settings:

There is only one (1) venturi and one (1) air shutter to be adjusted.

When installing the burner top, ensure that the venturi tube is engaged to the air shutter adjustment rod.

Use this small venturi adjustment rod to achieve a proper and efficient flame, shown in Figure 5.

Adjust rod until the flame pattern is similar to Figure 39.

Table 2: Venturi Setting.

	Natural Gas	Propane
Venturi Setting Rear	1/16" min.	3/16" min.

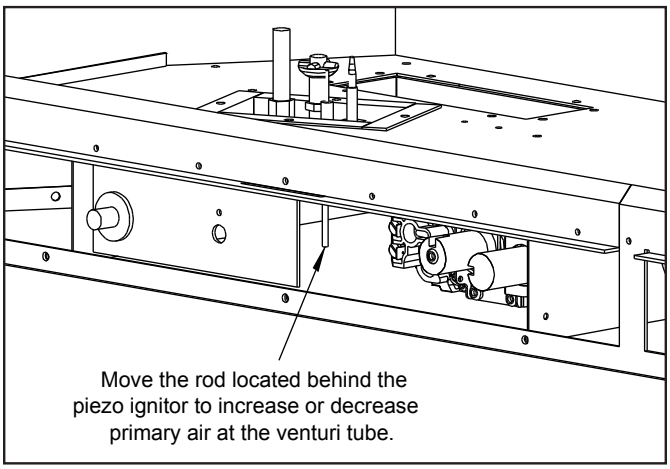

Figure 5: Venturi Air Setting Rod

Blower speed:

The blower will come on only when the fireplace is up to temperature (approximately 20 minutes). The speed of the fan can be changed by turning the fan control knob. To turn the blower off, turn the knob COUNTER CLOCKWISE until it "clicks" off.

It is advisable not to operate the blower below 1/3 speed as it puts a strain on the windings of the blower and running the blower at lower speeds could also cause premature fan failure.

Normal Sounds During Operation:

Table 3: Normal Sounds.

Component	Sound & Reason
EG31	Creaking when heating up or cooling down.
Burner	Light pop or poof when turned off; this is more common with LP units.
Temperature Sensor	Clinking when it senses to turn the blower on or off.
Pilot Flame	Quiet whisper while the pilot flame in on.
Blower / Fan	Air movement that increase and decreases with the speed of the blower. The blower is pushing the heat from the fireplace into the room.
Gas Control Valve	Dull click when turning on or off, this is the valve opening and closing.

Maintenance And Service

Routine Maintenance:

At least once a year, run through the following procedures to ensure the system is clean and working properly. Check the burner to see if all the ports are clear and clean. Check the pilot to make sure it is not blocked by anything. The pilot flame should be blue with little or no yellow on the tips.

Warning: Clearances must be sufficient to allow access for maintenance and service

Warning: Failure to position the parts in accordance with this manual, or failure to use only parts specifically approved with this appliance may result in property damage or personal injury.

The venting system must be periodically examined; it is recommended the examination is done by a qualified agency.

Glass Door Removal:

Turn unit off and wait until the appliance has cooled down.

Remove the decorative fascia or clip-on bay window by lifting it up and removing it from the slots in the body of the unit.

Undo the two (2) 5/16" bolts at the top of the door frame and then lift the glass and frame, being careful that the glass does not fall out of the door frame assembly. Install in the reverse order.

Ensure the door is properly fastened after cleaning before attempting to re-light the appliance.

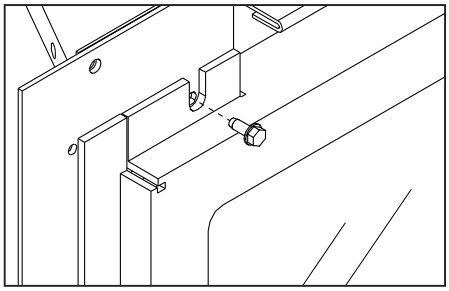

Figure 6: Top bolts for glass door.

Cleaning The Glass:

When the fireplace has cooled, remove the face of the fireplace along with the glass. See Maintenance And Service - Glass Door Removal. Check the gasket material on the back of the glass, making sure that it is attached and intact.

During a cold start up, condensation will sometimes form on the glass. This is a normal condition with all fireplaces. However, this condensation can allow dust and lint to cling to the glass surface. Initial paint curing of the appliance can leave a slight film behind the glass, a temporary problem. The glass will need cleaning about two weeks after installation. **Use a mild glass cleaner and a soft cloth**; **abrasive cleaners will damage the glass and plated surfaces.** Depending on the amount of use, the glass should require cleaning no more than two or three times a season. **Do not clean the glass when it is hot.**

Cleaning The Firebox:

Remove the logs carefully, as they are very fragile. Gently remove all the embers and rock wool and place on a paper towel. Vacuum the bottom of the firebox thoroughly. Carefully clean any dust off the logs and remove any lint from the burner and pilot. At this time, inspect the burner pan for cracking or severe warping. If a problem is suspected, contact the dealer. Check the logs for deterioration or large amounts of soot; a small amount on the bottom side of the logs is normal. Replace the logs and embers as in the Secondary Installation - Log Set and Ember Installation section. If new/more embers and rock wool are required, contact your nearest ENVIRO dealer.

Maintenance And Service

Replacing the Glass:

The glass in the fireplace is a high temperature ceramic. If the glass is damaged in any way, a factory replacement is required (see Parts List). Wear gloves when handling damaged glass door assembly to prevent personal injury. When the glass door assembly is being transported, it must be wrapped in newsprint and tape and/or a strong plastic bag. Do not operate with the glass front removed, cracked or broken. Removal and replacement of the glass from the door **must** be done by a licensed or qualified service person. **The glass must be purchased from an ENVIRO dealer. No substitute materials are allowed.**

Cleaning The Painted Surfaces:

Painted surfaces should be periodically wiped with a damp cloth when the unit is cool.

Burner and Blower Removal:

1. Turn the unit off, remove the glass door (see Maintenance And Service - Glass Door Removal) and the log set. **Caution: Bleed lines before lighting and light pilot with door open.**
2. Remove the burner tray top by removing the two (2) T-20 screws located in the center of the burner tray (see Figure 7). Slide tray to the left and lift out.
3. Remove brick panels (see Secondary Installation - Brick Panels Installation).
4. Remove the surround panel by lifting it straight up and then out to free it from the body of the unit.
5. Turn the gas supply off and remove gas connection and disconnect the wiring from the side of the appliance.
6. Remove the three (3) T-20 screws that hold the air deflector in place on the back firewall (see Figure 7) and undo the remaining screws that hold the burner assembly in the appliance. Carefully remove the gas tray assembly from the firebox, ensuring that wires and gas lines are not damaged.
7. Remove the blower and housing from the gas tray assembly by removing the fastening screws located on the back of the gas tray assembly. Disconnect the wiring from the fan temperature sensor and remove.

To install; follow steps 1 through 7 in reverse. Perform a gas leak check on all gas line with a soap and water solution or an approved method and check burner and blower assembly for proper operation.

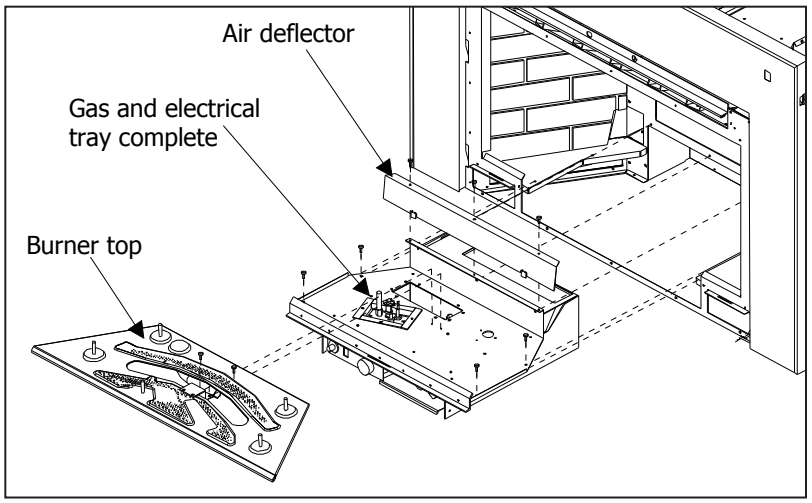

Figure 7: Removing Burner and Gas Tray.

Fuel Conversion:

TO BE INSTALLED BY A QUALIFIED SERVICE AGENCY ONLY

Please read and understand these instructions before installing.

Warning: This conversion kit shall be installed by a qualified service agency in accordance with the manufacturer's instructions and all applicable codes and requirements of the authority having jurisdiction. If the information in these instructions is not followed exactly, a fire, explosion or production of carbon monoxide may result causing property damage, personal injury or loss of life. The qualified service agency is responsible for the proper installation of this kit. The installation is not proper or complete until the operation of the converted appliance is checked as specified in the manufacturer's instructions supplied with the kit.

Kit Parts List:

1 - Orifice (NG #38 DMS or LP #52 DMS)

1 - Pilot Injector (NG 0.62 mm; LP 0.35 mm)

1 - Installation instruction sheet

1 - Conversion label

Carefully inspect all parts supplied with this conversion kit. If any parts have been damaged or are missing, contact your dealer, distributor or courier company to have them replaced before starting this installation.

Conversion Kit Installation:

1. Turn control knob on the gas valve to the "OFF" position and shut the gas supply off at the shut-off valve upstream of the unit. CAUTION: The gas supply must be shut off prior to disconnecting the electrical power and before proceeding with the conversion. Allow the valve and unit to cool down to room temperature.
2. Remove the glass as shown in the Maintenance and Service - Opening The Door.
3. Carefully remove the log set and ember material if they are installed.
4. Remove the burner as shown in the Maintenance and Service - Burner Removal.
5. Convert the burner orifice(s):
   a) Remove the main burner orifice with a ½ inch deep socket.
   b) Put a bead of pipe-thread sealant or approved Teflon tape on the orifice threads before installing into the brass elbow.
   c) Install the new orifice(s) from the kit into the brass elbow.
6. Convert the pilot injector:
   a) Pull the pilot hood straight up to access the pilot injector.
   b) Using a $^{5}/_{32}$" or 4 mm Allen key, remove the pilot injector.
   c) Install the new pilot injector supplied with this conversion kit. Simply screw the new injector inside the pilot hood using the Allen key,
   d) Reinstall the hood by placing the hood on the assembly, line up the key way, and snap into place.

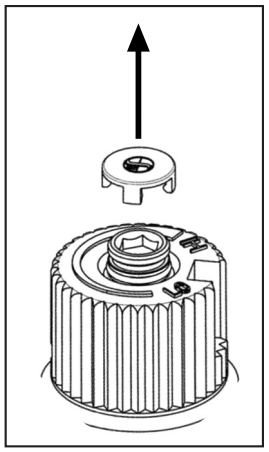

Figure 8: Removing valve cap.

7. Convert the SIT gas valve:
   a) Remove the black protection cap from the HI/LO knob by hand shown in Figure 8.

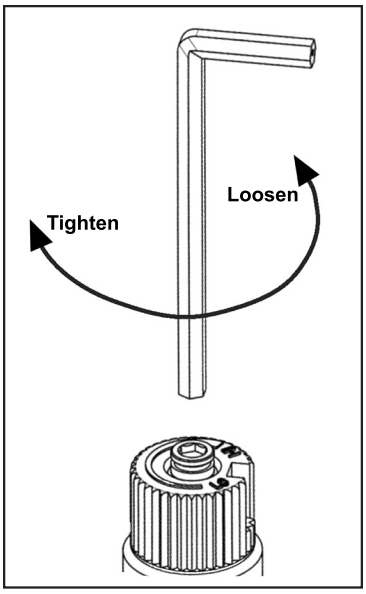

Figure 9: Removing valve screw.

   b) Insert a $^{5}/_{32}$" or 4 mm Allen wrench into the hexagonal key-way of the screw (see Figure 9), rotate it counter-clockwise until it is free and extract it.
   c) Check that the screw is clean and if necessary remove dirt.
   d) Flip the screw (refer to Figure 10).
   e) Using the Allen wrench as shown in Figure 9, rotate the screw clockwise until a torque of 9 inch lbs. **WARNING!** Do not over tighten the screw. It is recommended that you grip the wrench by the short side.
   f) Verify that if the conversion is from NG to LPG, the screw must be re-assembled with the red o-ring visible (refer to Figure 11). If the conversion is from LPG to NG, the red o-ring of the screw must be not visible.
   g) Re-attach the black protection cap that was removed in step a (Figure 8).

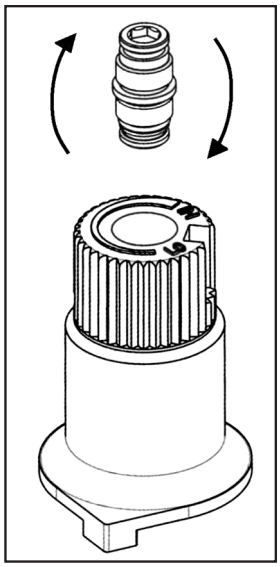

Figure 10: Flip valve screw.

8. Reinstall the burner, brick panels, log set, embers, and glass door. Also refer to SECONDARY INSTALLATION - INSTALLING LOG SET AND EMBERS. When re-installing the burner, ensure that the burner to pilot hood relationship is similar to what is shown in Figure 12. On some units you will need to pay special attention when installing the burner that the venturi adjustment rod is properly installed into the venturi adjustment piece welded to the burner venturi tube
9. Reconnect the main gas line if it was disconnected and open the shut-off valve at the gas line to the unit.
10. Use a small brush to apply a warm soapy water solution to all gas connections (use a half dish soap and half warm water). If a gas leak is present, bubbling will occur. Gas leaks can be repaired by using an approved pipe thread sealant or approved Teflon tape. NEVER USE AN OPEN FLAME WHEN TESTING FOR LEAKS.
11. Reconnect the electrical power to the unit.

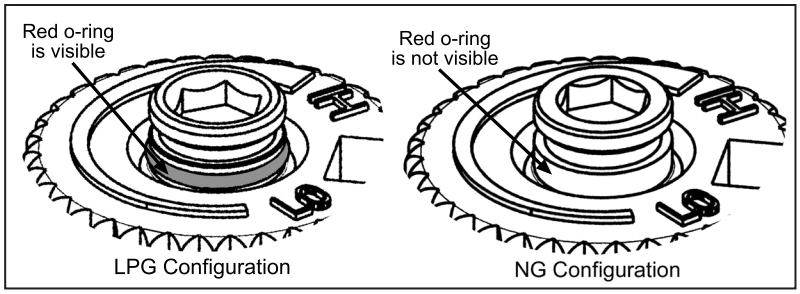

Figure 11: O-ring on valve screw.

12. Relight the pilot and confirm the flame properly covers both the thermocouple and thermopile (see Figure 4, page 7). Should the pilot require adjustment, turn the adjustment screw (figure 26, page 23) clockwise to decrease or counterclockwise to increase until the correct flame is achieved.
13. Relight the main burner in both the "HI" and "LO" positions to verify proper burner ignition, operation and proper flame appearance. Confirm the inlet and manifold pressures are within the acceptable ranges as directed in section INTIAL INTALLATION - GAS LINE CONNECTION AND TESTING. If the EG31 has been installed at an altitude higher than 2000ft (610m) it is required to de-rate the unit accordingly:

In the USA: The appliance may be installed at higher altitudes. Please refer to your American Gas Association guidelines which state: the sea level rated input of Gas Designed Appliances installed at elevations above 2000 (610 m) feet is to be reduced 4% for each 1000 feet (305 m) above sea level. Refer also to local authorities or codes which have jurisdiction in your area regarding the de-rate guidelines.

In Canada: When the appliance is installed at elevations above 4500 feet (1372 m), the certified high altitude rating shall be reduced at the rate of 4% for each additional 1000 feet (305 m).

14. MAKE SURE that the conversion label is installed on or close to the rating label to signify that the unit has been converted to a different fuel type.

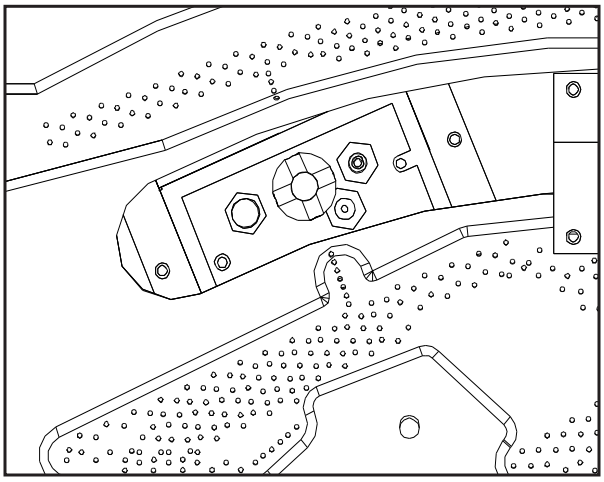

Figure 12: Burner to pilot hood relationship.

Initial Installation

QUALIFIED INSTALLERS ONLY

WARNING: Operation of this heater when not connected to a properly installed and maintained venting system can result in carbon monoxide (CO) poisoning and possible death.

Warning: Failure to position the parts in accordance with this manual, or failure to use only parts specifically approved with this appliance may result in property damage or personal injury.

Clearances to Combustibles

Maintain sufficient clearances for operation, service and maintenance.

- A minimum distance of 9" (229mm mm) is required from the side of the unit to the sidewalls.
- A 8" (200 mm) wide mantel can be mounted at a minimum height of 38" (965 mm) from the bottom of unit.
- If installed at floor level there must be a minimum of 16" (406 mm) of non-combustible material in front of the unit.
- Minimum ceiling clearance is 61.5" (1562mm) from bottom of unit.

Warning: Clearances must be sufficient to allow access for operation, maintenance and service. Stove must sit on a non-combustible surface

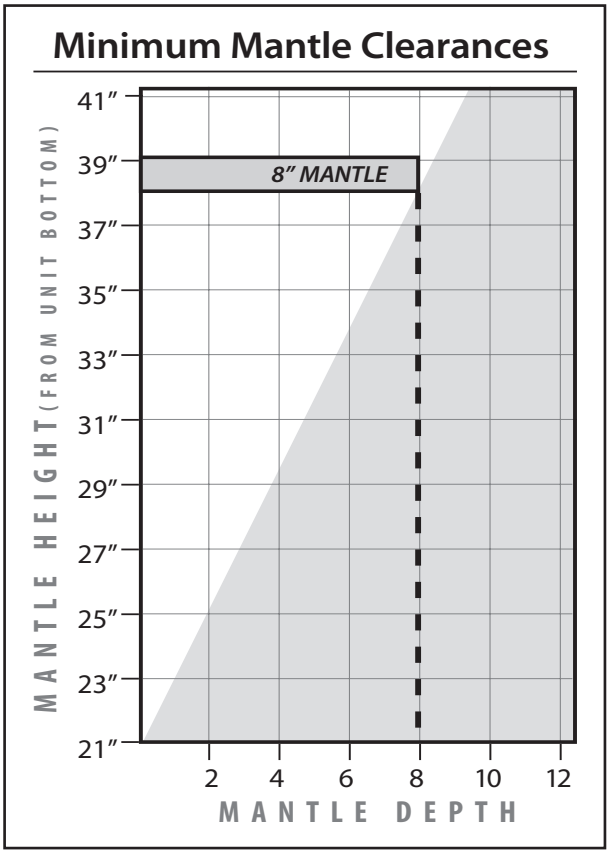

Figure 13: Mantle width and height.

Minimum Fireplace Size:

Table 4: Minimum dimensions of fireplace for EG31 to be installed into.

	Width	Height	Depth
Fireplace Dimensions	34" (864 mm)	21" (533 mm)	18" (457 mm)

NOTE: Space must be provided for gas line on right side of unit for servicing purposes. The EG31 can only be installed into masonary or zero-clearance fireplaces.

Initial Installation

QUALIFIED INSTALLERS ONLY

Direct Vent Model:

WARNING: This appliance has been designed to draw room air for proper heat circulation from the sides of the unit. Blocking or modifying the louvers in any way can create hazardous situations.

The vent length for the EG31 must be between 8ft (2.44 m) and 25ft (7.62 m).

This model is vented with TWO (2) 3" aluminum or stainless steel flex vent leading into a co-linear to co-axial vent adaptor and using a Simpson Dura Vent vertical termination cap. The flue collars of this model will fit inside of standard 3" vent and may be fastened directly to the vent. The Exhaust vent is in the center of the flue connector. The Air Intake is on the left side of the vent collar plate (this outlet is not in the center it is off to one side of the vent collar plate.)

Check periodically that the vents are unrestricted. Also ensure that all direct vent pipes have been properly sealed and installed after routine inspection or cleaning. The air intake and exhaust pipes must be installed in the correct locations on the removable draft hood connector.

Direct Vent Restrictor Ring:

DIRECT VENT ONLY: The maximum vertical vent height for a direct vent installation is 25 feet (7.62 m). Use the vent restrictor ring for installations above 15 feet (4.57 m). See Figure 14 for installation of restrictor ring.

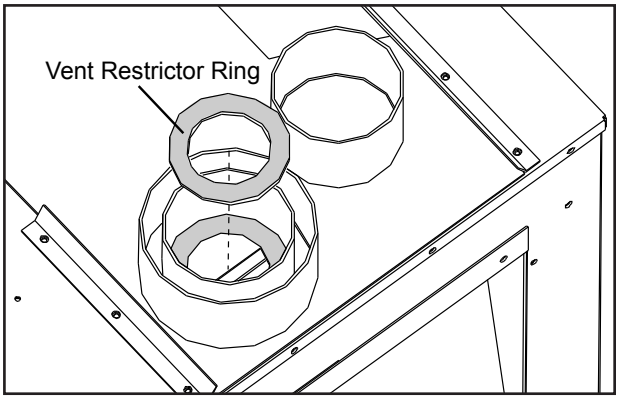

Figure 14: Direct vent restrictor ring installation.

Venting Fireplace Inserts:

The **ENVIRO** EG31 may be installed and vented into any solid fuel fireplace that has been installed in accordance with the National, Provincial/State and local building codes and has been constructed of non-combustible materials. Before starting, refer to Initial Installation - Preparing Your EG31 For Installation. Please reference the information in Table 5 and Figures 15, and 16.

An approved chimney liner and rain cap must be used. A throat connector or flashing **must** be installed to ensure a tight seal, top performance, safety and efficiency. Carefully follow the manufacturer's instructions that accompany the chimney liner kit. Use double walled aluminum flex vent (3" flex conversion piece and 4"x 6 5/8" cap) from any of the following approved products; Simpson Dura-Vent (Direct Vent GS) or (ICC Excel Direct). If necessary, remove the vent collar plate from the top of the insert and connect it securely to the liner with sheet metal screws.

Check for any tears in the liner at this point. IMPORTANT: The screws that hold the vent collar plate in its approved position must be installed.

NOTE: If the EG31 unit is pulled out of its installation, and the vent air intake system is disconnected for any reason, ensure that the vent-air intake pipes are re-sealed with high-temperature sealant and reconnected with three (3) sheet metal screws evenly spaced.

QUALIFIED INSTALLERS ONLY

Table 5: Vent termination clearances

Minimum Clearance*	Description
3 ft (0.9 m)	Clearance above the highest point where it passes through a roof surface, refer to Figure 15.
24 in (0.6 m)	Clearance above a roof ridge, any other portion of a building, or any other obstruction within a horizontal distance of 10 feet (3 m), refer to Figure 15.
5 ft (1.5 m)	Clearance for a vent or chimney above either the highest connected appliance drafthood outlet, or flue collar.
6 ft (1.83 m)	Clearance to mechanical air supply inlet.
3ft (0.9m)	Clearance to each side of center line extended above meter/regulator assembly.
6 ft (1.83 m)	Radial clearance around service regulator vent outlet.
12 in (30 cm)	Clearance above grade, verandah, porch, deck, or balcony.
3 ft (0.9 m)	Clearance to a building opening or combustion air inlet of another appliance, except with the approval of the authority having jurisdiction for the following reduced clearances.
9 in (0.23 m)	Exception for inputs up to and including 50,000 Btu/h (15kW)
12 in (0.3 m)	Exception for inputs exceeding 50,000 Btu/h (15kW) but not exceeding 100,000 Btu/h (30kW)

*Clearances are in accordance with local installation codes and the requiremenets of the gas supplier

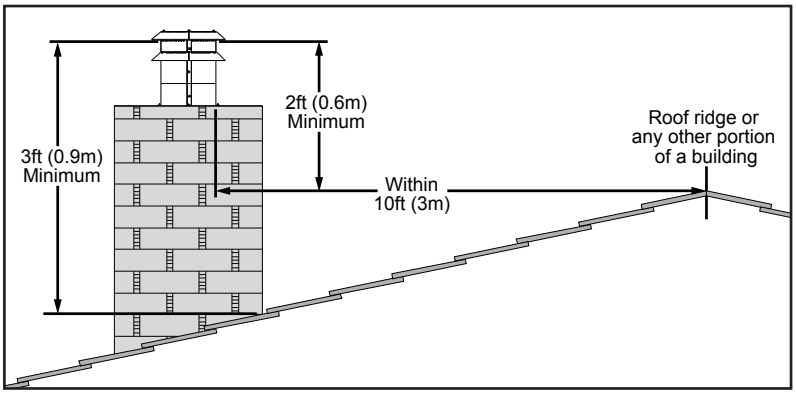

Figure 15: Roof Clearances.

QUALIFIED INSTALLERS ONLY

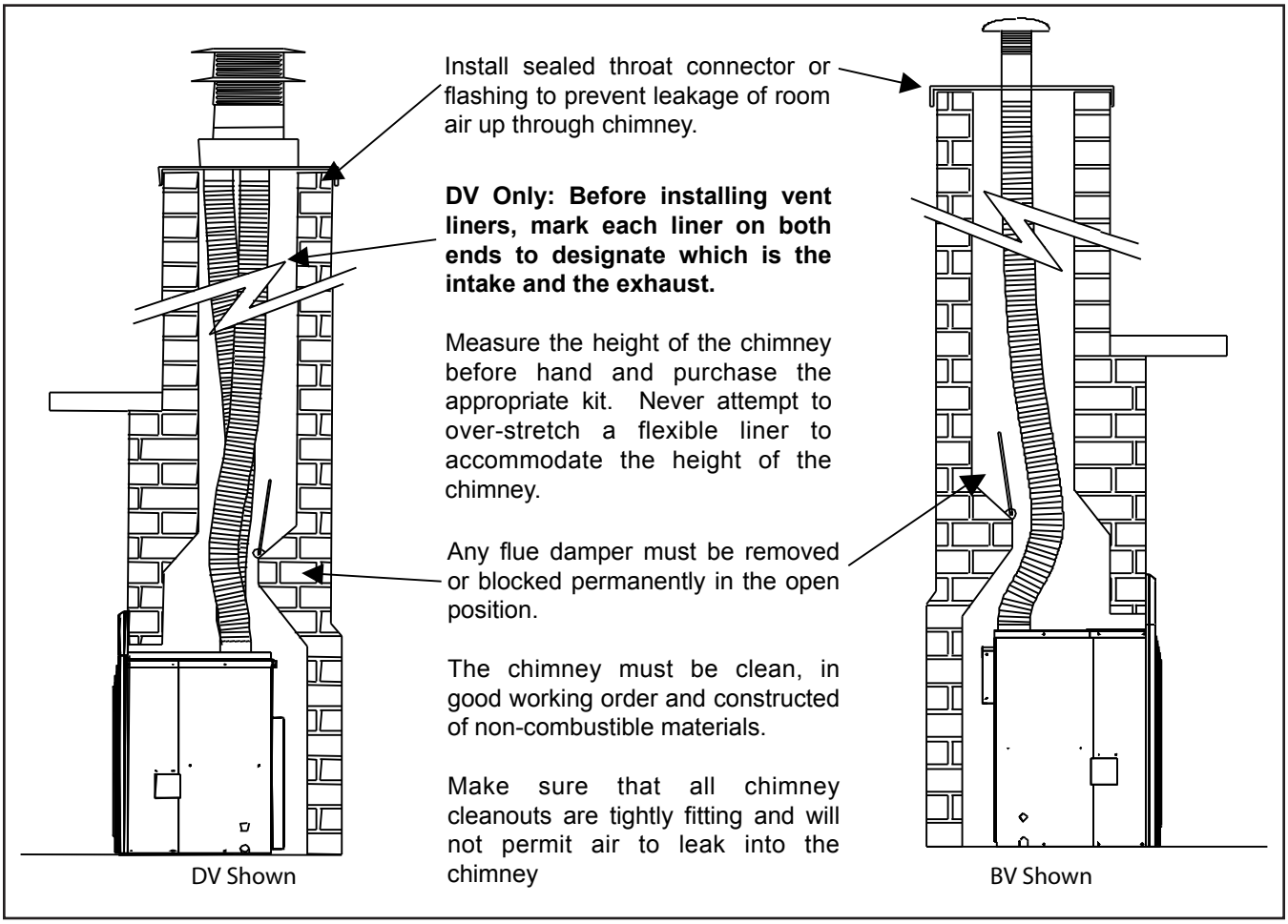

Figure 16: Installation of EG31 DV and BV.

AUTOMATIC FLUE GAS SPILL SWITCH:

NOTE: This heater must be properly connected to a venting system. This heater is equipped with a vent safety shutoff system designed to protect against improper venting of combustion products. This safety switch is located on the rear of the appliance close to the draft hood relief opening. If the switch trips more than once, the venting should be inspected by a qualified service technician for possible blockage or severe down draft conditions.

BV Only: The draft hood must be in the same pressure zone as the air inlet. To inspect draft from the front of the unit, locate the ¼" tube between the louvers (see Figure 17) and check for a draft using smoke. A vacuum or suction into the tube will indicate proper drafting.

This model can be vented with 4" aluminum or stainless steel flex vent and/or certified Type B Gas Vent. The flue collar of the appliance will fit inside of a standard 4" vent and may be fastened directly to the vent, check periodically that the vent is unrestricted and an adequate draft is present when the unit is in operation.

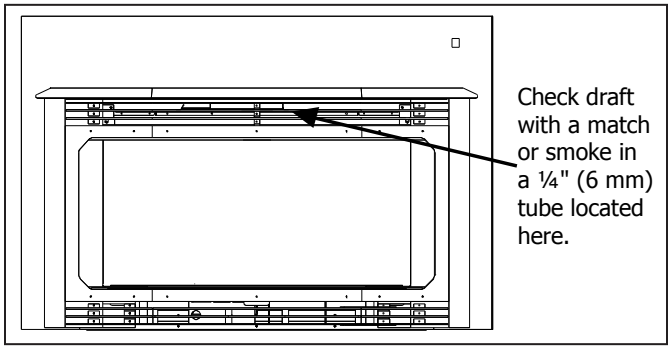

Figure 17: Draft Check.

DIRECT VENT VERTICAL VENT TERMINATION:

INSTALLATION INSTRUCTIONS:

1. Plan your installation and clearances to combustibles. The EG31 may be installed and vented into any solid fuel fireplace that has been installed in accordance with the National, Provincial/State and local building codes and has been constructed of non-combustible materials. Also refer to the INITIAL INSTALLATION - PREPARING YOUR EG31 FOR INSTALLATION and CLEARANCES TO COMBUSTIBLES sections. Refer to Figure 13 throughout installation.
2. Stretch the Ø3" (76mm) flex vent liners to the length needed to ensure they can be easily connected to the vent terminals.
3. Install the flex pipe assembly up through the chimney, ensure that the pipe slides through far enough to connect onto the vent cap.
4. Most vent caps can be installed onto chimneys with flue openings up to 16" (406mm) x 16" (406mm) and the actual flashing is 18"x18" (refer to Figure 18). If the chimney is smaller the cap should be trimmed down and folded over.
5. Apply a bead of stove cement sealant to the top section of the Ø3" (76mm) exhaust vent collar plate. Slide the Ø3" (76mm) flex vent over the flue collar and secure with three (3) sheet metal screws evenly spaced.

   Note: If fireplace opening is lower than 21.75" (552 mm), remove the vent collar plate from the top of the insert (see INITIAL INSTALLATION - PREPARING YOUR EG31 FOR INSTALLATION) and connect it securely to the liner as stated in Step 4. Check for tears in the liner at this point.
6. Place a bead of high temperature silicone on the intake collar of the fireplace, slide the Ø3" (76mm) flex intake liner over the collar, secure the flex liner with three (3) sheet metal screws evenly spaced.
7. At the top of the chimney, apply a bead of stove cement sealant to the Ø3" (76mm) pipe of the exhaust vent terminal (refer to Figure 18). Slide the flex liner onto the vent terminal and secure with three (3) sheet metal screws evenly spaced.
8. Place a bead of high temperature silicone on the intake collar of the vent terminal (refer to Figure 18). Slide the Ø3" (76mm) flex intake liner over the collar, secure the flex liner with three (3) sheet metal screws evenly spaced.
9. Make a tight connection between the gas fireplace insert flue collar and the fireplace chimney at the top of the chimney. Secure the vent terminal to the chimney using adequate sealant, and according to local building codes.

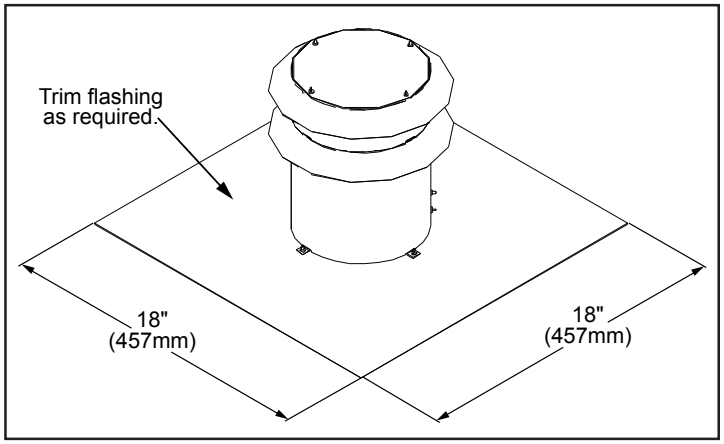

Figure 18: Generic Vent Cap Dimensions.

APPROVED TERMINATIONS:

-Simpson Dura-Vent

46DVA-VCH cap with 46DVA-GK termination adapter
or
46DVA-CL33 termination kit

-ICC

TM-4SVT cap with TM-CTA termination adapter

Initial Installation

QUALIFIED INSTALLERS ONLY

B Vent Model:

WARNING: This appliance has been designed to operate by drawing combustion air and dilution air from the room. It is also designed to draw room air for proper heat circulation from the sides of the unit. Blocking or modifying the louvers in any way can create hazardous situations, either through poor venting or by overheating. It is important that this unit has sufficient air circulation for proper venting and combustion. Provisions must be made for the supply of adequate combustion and ventilation air. These openings must not be blocked. The appliance must not be connected to a chimney flue servicing a separate solid fuel burning appliance.

Converting A Direct Vent Fireplace To A B-Vented Fireplace:

Parts required for conversion

1 - 300°F (149°C) manual reset spill switch and wires
1 - Drafthood (4" chimney connection)
2 - Air channels
1 - Drafthood diverter

1. Remove the chimney connector, fresh air cover plates and draft hood cover plate.
2. Install the 300°F (149°C) spill switch in the location provided.
3. Install the two fresh air channels in the correct locations.
4. Install a new 4" chimney liner into the existing and attach with three (3) sheet metal screws evenly spaced to new 4" chimney connector.

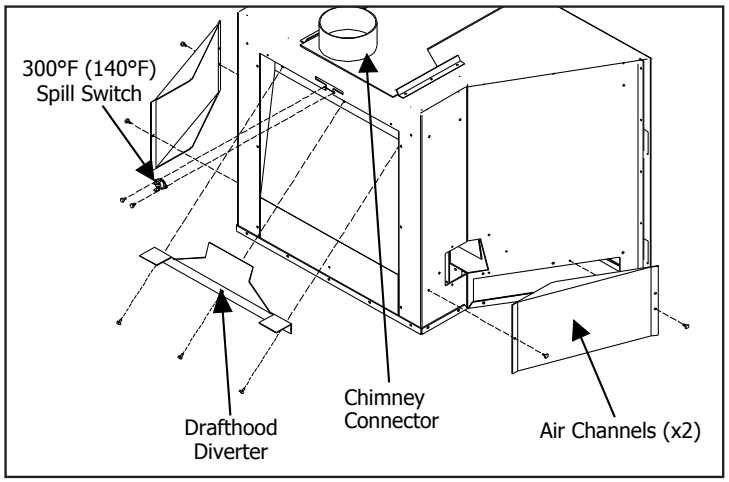

Figure 19: Converting To A BV Fireplace.

5. Test fire the appliance and ensure proper operation. A venturi adjustment could be required to achieve an efficient flame. Improper operation or adjustment could result in Carbon Monoxide production causing personal injury or property damage.

Converting A B-Vent Fireplace To A Direct Vented Fireplace:

Parts required for conversion

1 - Drafthood (2 - 3" dual pipe chimney connector), 2 - Air channel cover plates, 1 - Drafthood cover plate.

1. Remove the chimney connector, 300° spill switch, two (2) B-vent air channels and B-vent draft diverter plate.
2. Install the two (2) air channel cover plates in the locations provided.
3. Install the draft hood cover plate in the location provided.
4. Install two (2) 3" chimney liners in the existing chimney, securing the 3" liners with three (3) sheet metal screws evenly spaced to the new chimney connector.
5. Test fire the appliance and ensure proper operation. A venturi adjustment could be required to achieve an efficient flame. Improper operation or adjustment could result in Carbon Monoxide production causing personal or property damage.

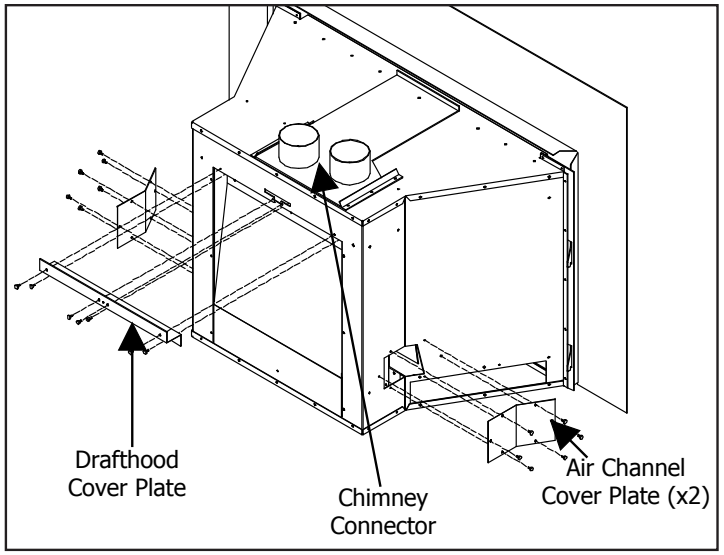

Figure 20: Converting To A DV Fireplace.

Initial Installation

QUALIFIED INSTALLERS ONLY

Preparing Your EG31 For Installation:

1. Remove the appliance and surround panels from the packaging; check to make sure there is no damage. Carefully check the glass door. Do not use the unit if it is damaged. In the event damage is found, please report it to both the courier and your dealer as soon as possible.
2. Carefully clean the fireplace and flue before installing the stove. Failure to do so may result in fumes or dirt being blown into the room and may cause a fire leading to death or serious injury.
3. Remove the glass door; see Maintenance And Service - Glass Door Removal.
4. Remove log and ember set and all wrapping material from inside the stove. Remove wrapping material from log and embers and check for any damage. If damage is observed, do not use unit and contact your local dealer.
5. Remove the vent collar plate from the top of the stove by unscrewing the T-20 Torx screw located on the center top of the stove. Slide collar plate backwards. Properly secure the vent collar plate to the flexible vent pipe liner(s) previously installed in the chimney. Be careful not to over-stretch the liner(s).
6. Install the leveling legs. Thread the two (2) 5" (13 cm) bolts and locknut up into the captive nuts at each end of the leveling leg bracket (refer to Figure 21).
7. Place the unit part way into the fireplace. Connect the fireplace insert's flexible gas line to the household gas supply, using locally approved methods. Place the electric cable so it can be connected to the power supply.
8. As you push the unit into its final position in the fireplace, reinstall the vent collar plate to the stove by sliding it along the draft hood and secure with the screw. Adjust the leveling legs to ensure the unit is level.
9. Connect the wires from the unit to the ON/OFF/THERMOSTAT switch mounted on the surround panel (see figure 22)

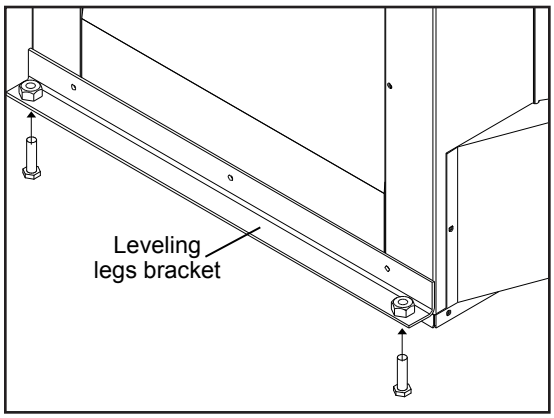

Figure 21: Installation of Leveling Legs.

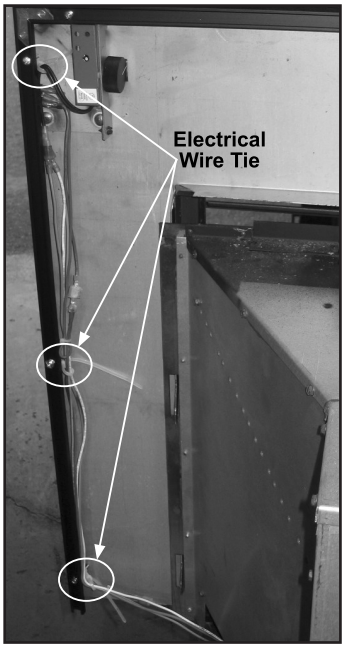

Figure 22: Wire ties holding wires against the panel

Initial Installation

QUALIFIED INSTALLERS ONLY

Zero Clearance (ZC) Fireplace Installation:

The metal floor of the ZC solid fuel firebox can be removed to allow the installation of the insert. THE CLEARANCE TO COMBUSTIBLE MATERIAL UNDER THE INSERT IS 4" (102 mm). YOU MUST USE THE LEVELING LEGS TO RAISE THE INSERT A MINIMUM OF 4" (102 mm) IF THE UNIT IS TO BE INSTALLED ON COMBUSTIBLE MATERIAL. IF THE ZERO CLEARANCE FIREPLACE IS INSTALLED DIRECTLY ONTO A CONCRETE FLOOR THE MINIMUM CLEARANCE IS NOT APPLICABLE. The optional Base Shelf and Riser are recommended to fill the space under the unit once raised. The sidewalls and top structure of the solid fuel firebox cannot be altered with the exception of: removal of dampers, removal of smoke shelf or baffle, removal of ember catches, removal of log grate, removal of viewing screen/curtain, and removal of doors. THE ORIGINAL FIREPLACE MAY NEVER BE RETURNED TO SOLID FUEL USE IN THIS CONDITION.

IMPORTANT: If the factory-built fireplace has no gas access hole(s) provided, an access hole of 1.5 inch (37.5 mm) or less may be drilled through the lower sides or bottom of the firebox in a proper workmanship like manner. This access hole must be plugged with non-combustible insulation after the gas supply line has been installed. Cutting any sheet-metal parts of the fireplace, in which the gas fireplace insert is to be installed, except as tested for the floor is prohibited.

The included label plate shown below must be permanently attached inside the cavity of the fireplace in a visible location.

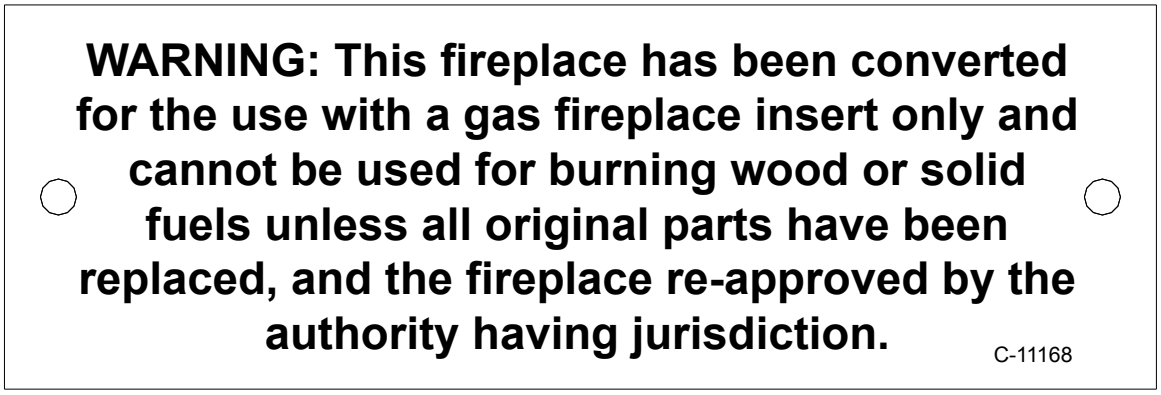

Figure 23: Fireplace Altered Plate.

Initial Installation

QUALIFIED INSTALLERS ONLY

ELECTRICAL REQUIREMENTS:

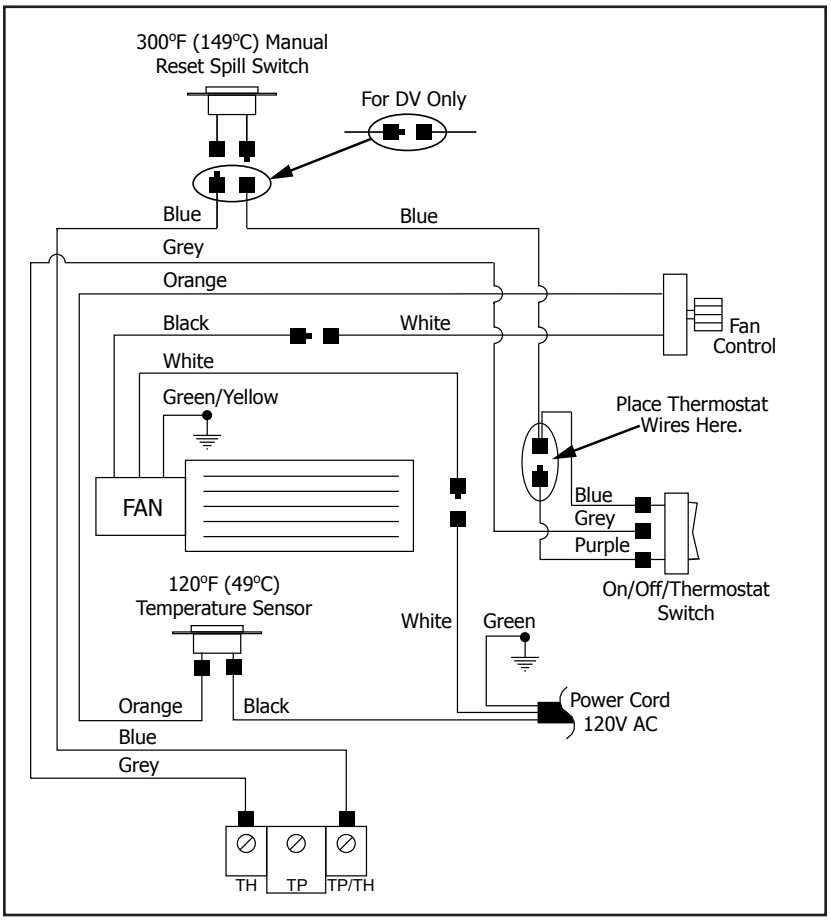

Figure 24: EG31 Wiring Diagram.

The **EG31** will operate without electrical power. This model has a Millivolt gas control which uses the pilot flame to generate enough electricity to operate the main burners. This appliance when equipped with a blower, must be electrically connected and grounded in accordance with local codes or in the absence of local codes, with the current CSA C22.1 CANADIAN ELECTRICAL CODE Part 1, SAFETY STANDARDS FOR ELECTRICAL INSTALLATIONS, OR THE NATIONAL ELECTRICAL CODE ANSI / NFPA 70 in the U.S.

WARNING: Electrical grounding instructions. This appliance is equipped with a three-prong (grounding) plug for your protection against shock hazard, and should be plugged directly into a properly grounded three-prong outlet. DO NOT cut or remove the grounding prong from this plug.

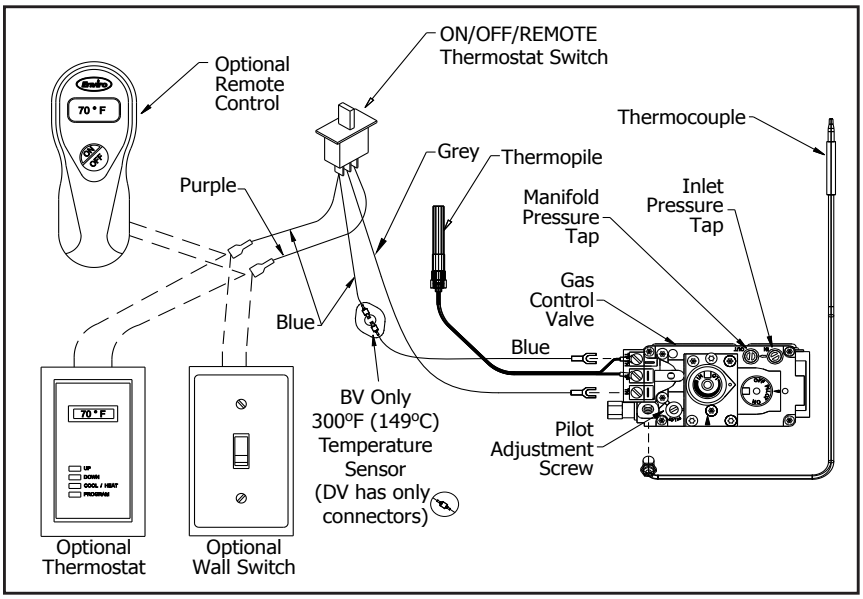

Figure 25: Wiring of a Thermostat.

CAUTION: Label all wires prior to disconnection when servicing controls. Wiring errors can cause improper and dangerous operation. Verify proper operation after servicing.

Table 6. Recommended Thermostat Wire Size.

Wire Size	Max. Length
14 gauge	100 ft (30.48 m)
16 gauge	60 ft (18.29 m)
18 gauge	40 ft (12.00 m)
20 gauge	25 ft (7.62 m)
22 gauge	18 ft (5.49 m)

Initial Installation

QUALIFIED INSTALLERS ONLY

GAS LINE CONNECTION & TESTING:

Warning: Only persons licensed to work with gas piping may make the necessary gas connections to this appliance.

Gas Line Connection:

•This fireplace is equipped with a certified flexible pipe located on the right side of the unit, terminating in a ⅜" male NPT fitting. Consult the local authorities for local codes or use the CAN/CGA B149 (1 or 2) installation code in Canada. In the US, gas installations follow either local codes or the current edition of the National Fuel Gas Code ANSI Z223.1.

•The efficiency of this unit is a product thermal efficiency rating determined under continuous operating conditions and was determined independently of any installed system.

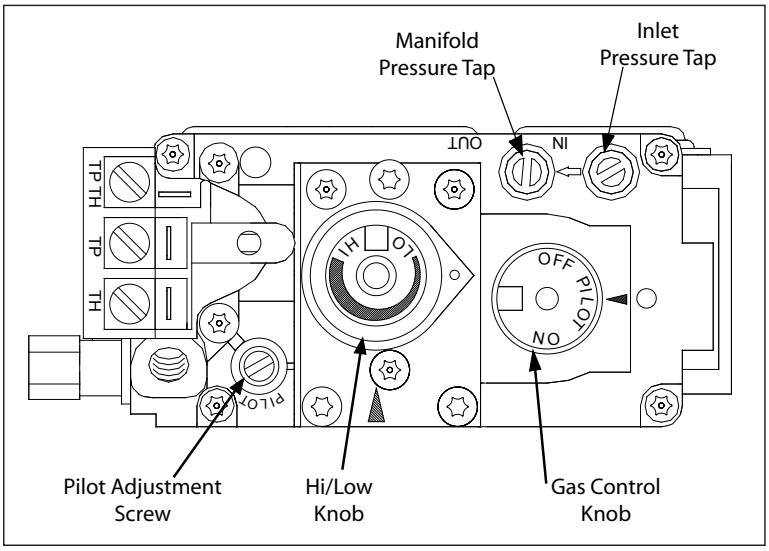

Figure 26: Fully Labeled Gas Valve.

The appliance and its' shut-off valves must be disconnected from the gas supply piping system during any pressure testing where the pressure **exceeds** ½ psig (3.45 KPa) or the valve will be damaged.

The unit must be isolated from the gas supply piping system by closing its' individual manual shut off valve during any pressure testing of the gas supply piping system at pressures **equal to or less than** ½ psig (3.45 KPa).

Always check for gas leaks with a soap and water solution after completing the required pressure test.

TO TEST VALVE PRESSURES:

The pressure taps are located on the top right of the valve.

- Turn set screw 1 turn counterclockwise to loosen.
- Place 5/16 in (8 mm) I.D. hose over the pressure taps.
- Check pressures using a manometer.
- When finished, release pressure, remove hose and tighten set screw.

Table 7: Pressure and BTU Information.

Main Burner	Natural Gas (in W.C./KPa)	Propane Gas (in W.C./KPa)
Orifice:	#38 DMS	#52 DMS
Manifold Press:	3.8 / 0.95	11.0 / 2.74
Min. Manifold Press:	1.1 / 0.27	2.7 / 0.67
Max. Supply Press:	7.0 / 1.74	13.0 / 3.28
Min. Supply Press:	5.0 / 1.24	12.0 / 2.98
Max. BTU Input:	30,000/ 8.8 KW·h	28,500/ 8.2 KW·h
Min. BTU Input:	15,000/ 4.4 KW·h	14,000/ 4.1 KW·h

NEVER USE AN OPEN FLAME FOR LEAK TESTING.

Adjusting The Pilot Flame:

The pilot flow adjustment is set to maximum at the factory and should not need to be adjusted. The pilot flame should envelope ⅜" to ½" (10 to 13mm) of the thermocouple (see Figure 27). However, should the need arise, follow Steps 1- 2 below.

1. The adjustment screw can be reached through the front of the unit using a 10 inch flat head screw driver (see Figure 27 for location on valve).
2. Turn the adjustment screw clockwise to decrease or counterclockwise to increase pilot flame.

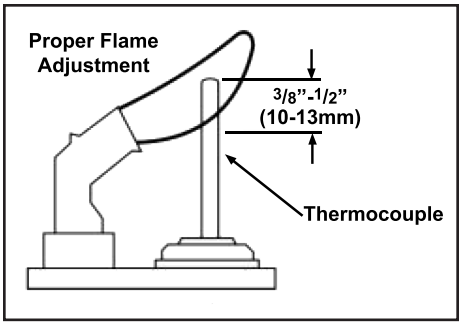

Figure 27: Proper Pilot Flame.

Secondary Installation

Extension Brackets Removal:

The extension brackets installed on the outside of the stove are used to make the front of the surround panel flush with the safety screen. If the reduced install depth is required, the top and side extension brackets will need to be removed as outlined in steps 1-3 below:

REMOVAL:

1. Using a T20 screwdriver, remove the four (4) screws that secure the Top Extension to the Cabinet (see Figure 29).
2. Remove the five (5) screws on each Side Extension (see Figure 29).
3. Remove extension parts from the stove.

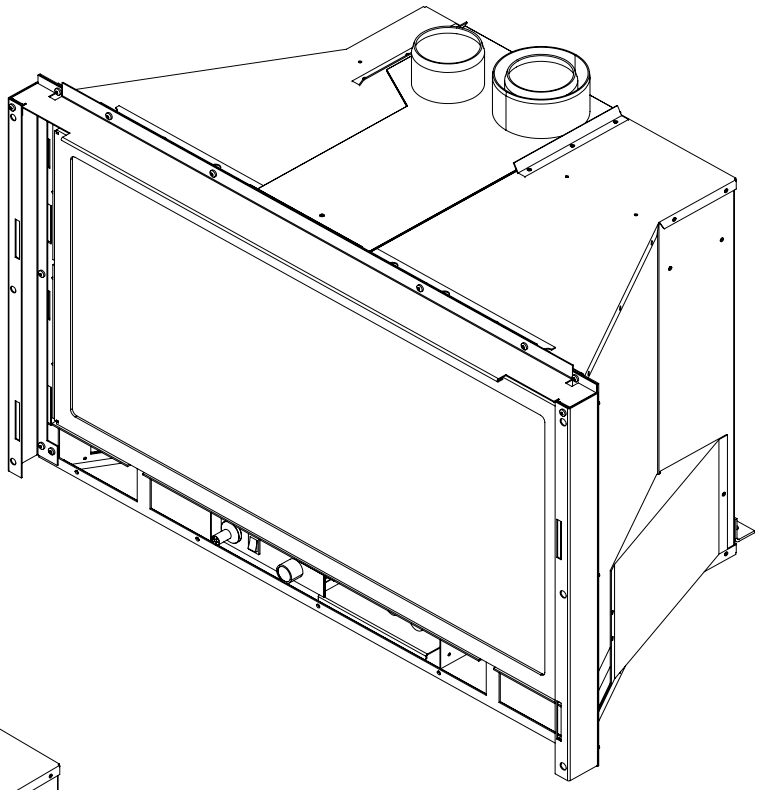

Figure 28: Stove as Shipped

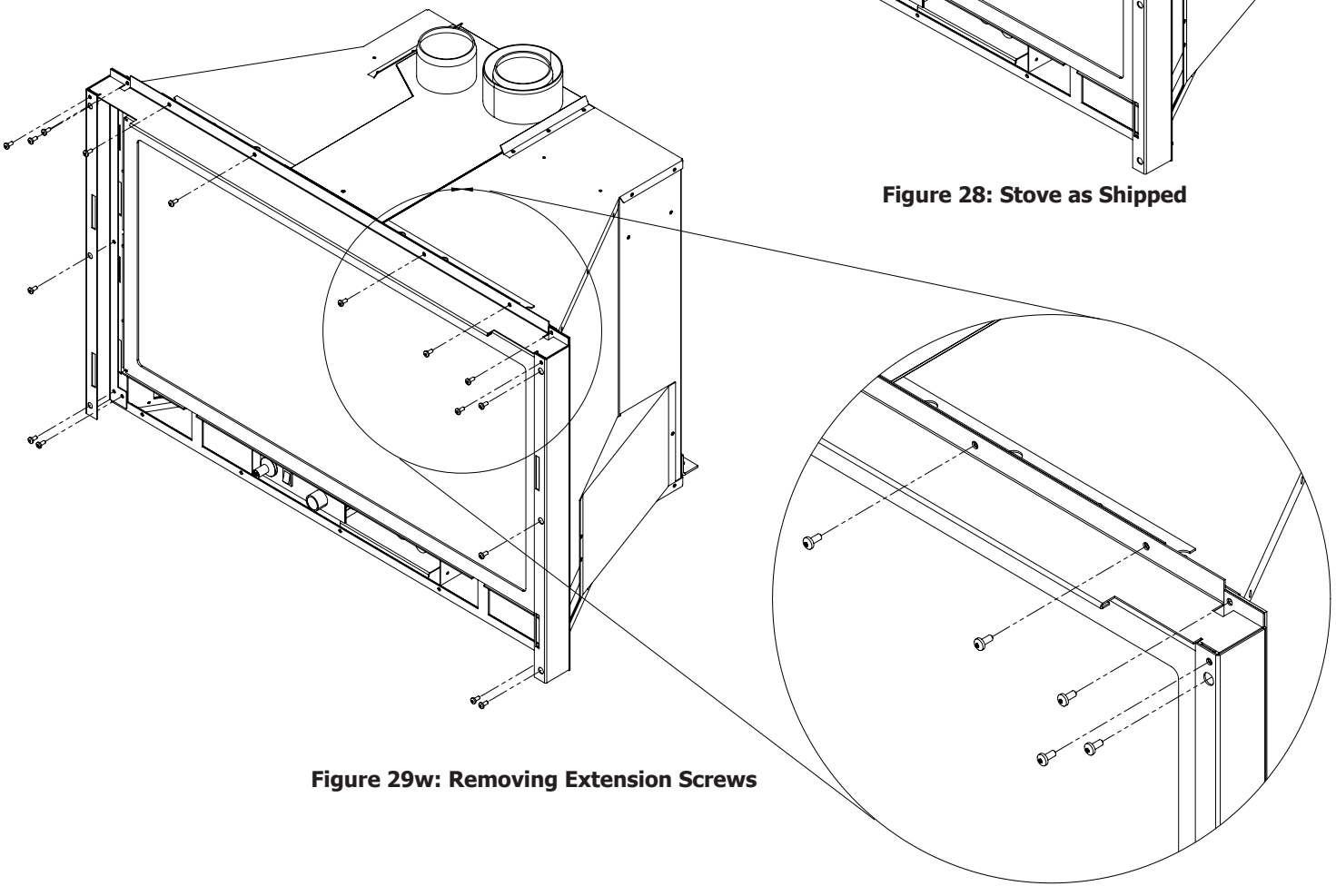

Figure 29w: Removing Extension Screws

Secondary Installation

SAFETY SCREEN INSTALLATION:

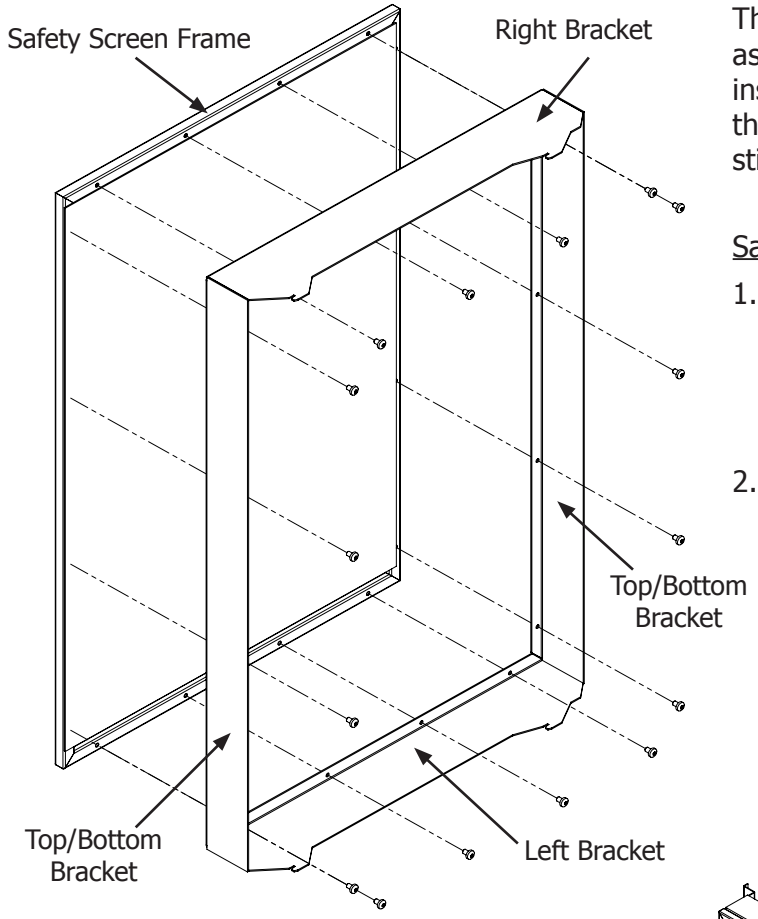

Figure 30: Installing Safety Screen Mounts.

The safety screen supplied with the unit must be assembled first before it can be installed. When installed, the screen should not extrude out any farther than the surround panel if the cabinet extensions are still installed.

Safety Screen Assembly

1. Attach the left, right, top/bottom brackets onto the safety screen using a T20 screwdriver and the supplied sixteen (16) #8 T20 screws (see Figure 30). Do not over-tighten the screws, doing so could cause them to strip out of the screen frame.
2. Lift the face upright in front of the fireplace with the four (4) hooks pointing towards the fireplace. Slide the hooks into the corresponding slots on each side of the cabinet (see Figure 31). Ensure the hooks are secure before releasing the safety screen.

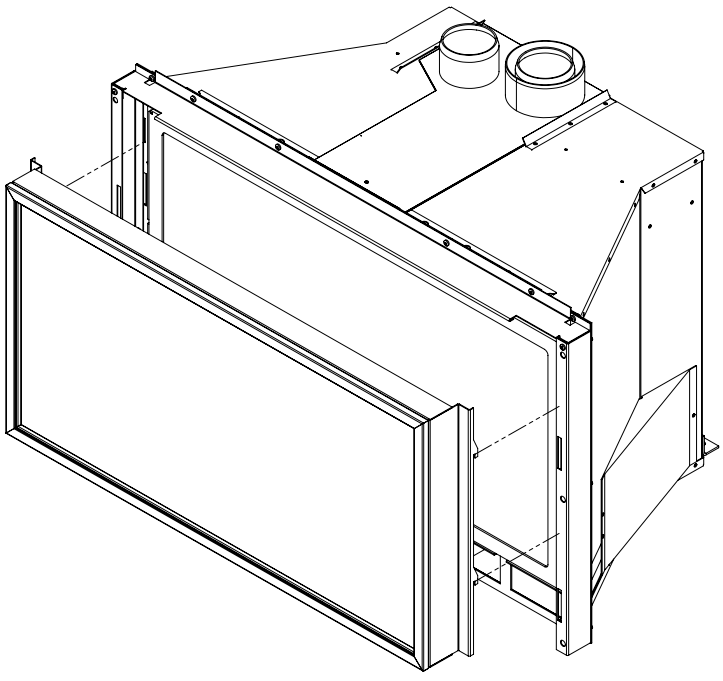

Figure 31: Installing Safety Screen onto Brackets

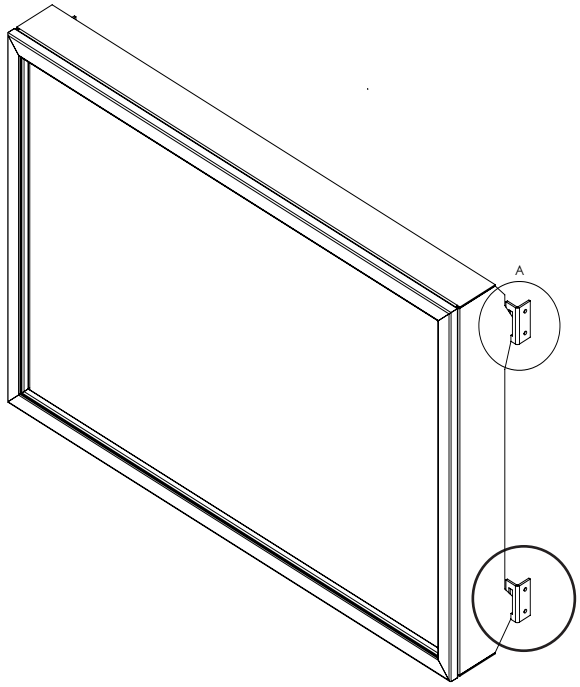

Figure 32: Installing Safety Screen onto Cabinet Bracket (Parts removed for clarity)

NOTE: The safety screen MUST be installed before the surround panel.

Secondary Installation

Surround Panel Installation:

Warning: The surround becomes hot when the unit is operating; ensure that the unit is turned off, and that it has cooled to room temperature before begining this installation. The safety screen must be installed before the surround panel.

Please check components supplied with this kit. If components are missing or have been damaged, contact your dealer, distributor or courier company before starting this installation.

IMPORTANT: The panel must not seal ventilation openings in the fireplace.

1. Place the assembled surround panel around the stove, align the slots. Push back then down to engage the surround panel hooks with the slots in the fireplace. Install the decorative fascia or bay window options to the appliance by aligning the hooks and the slots in the fireplace as seen in the surround panel installation.

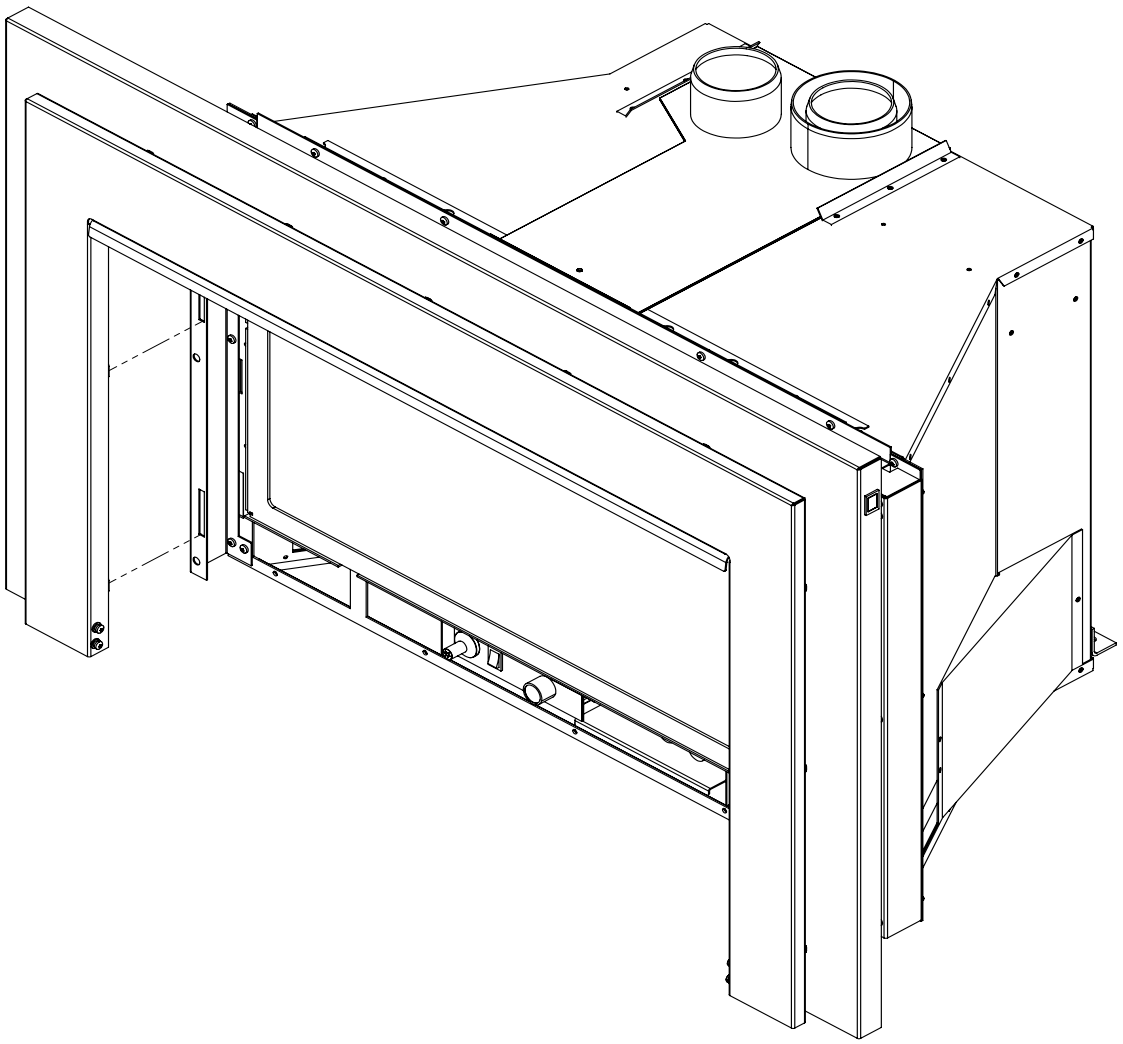

Figure 33: Surround Panel Install
(parts removed for clarity)

Secondary Installation

Log Set and Ember Installation:

The placement of the logs is not arbitrary. If they are positioned incorrectly, the flames can be "pinched" and will not burn correctly. The burner comes with placement pins and rest areas, which make alignment easier. Using Figures 34 to 39, carefully set the logs in place.

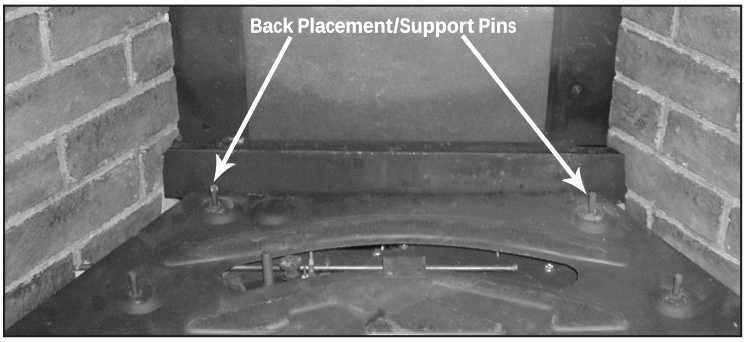

Figure 34: EG31 burner.

NOTE: The logs are fragile and should be handled with care.

Place the rear log on the two back placement pins.

Install the left front log on the left placement pin with the narrow end of the log resting on the rectangular rest area.

Install the right front log on the right placement pin with the narrow end of the log resting on the rectangular rest area. The last two logs should meet tip to tip on the rest area.

One end of the big log twig will rest on the pin on the right log and the other will lay within the left rest area.

The small log twig should be placed so it sit completely within the right rest area.

Once the logs are in place the embers can be placed lightly between the logs. Bags of ceramic fiber embers and rock wool are provided. The ceramic fiber comes in chunks that are about 2"-4" (5-10cm) long. Break these roughly in half and place them irregularly around the burner. When there is a sparse but even layer of embers, spread the rock wool in the same manner. DO NOT pack this ember material as this could create an unsafe condition. The pieces should be lightly place so they don't completely block any of the tiny ports. DO NOT allow any of the embers to rest against the pilot assembly.

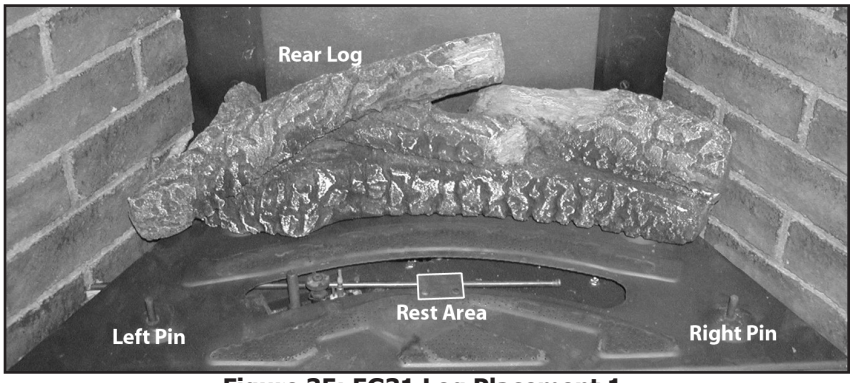

Figure 35: EG31 Log Placement 1.

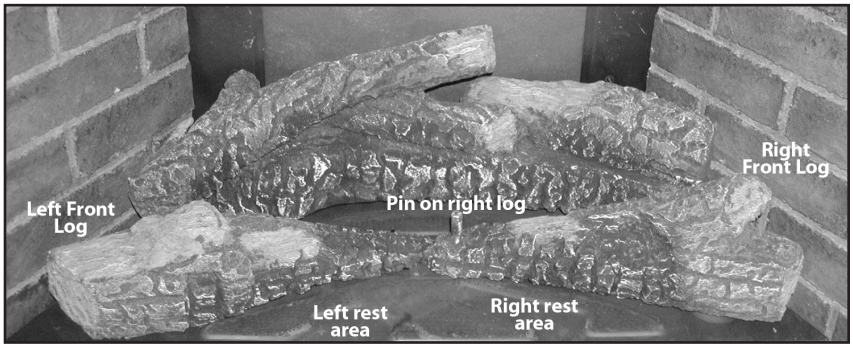

Figure 36: EG31 Log Placement 2.

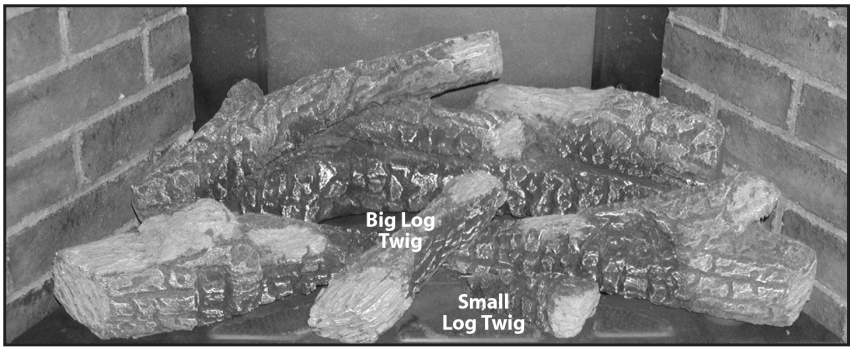

Figure 37: EG31 Log Placement 3.

Secondary Installation

Caution: Use only the type of ember material supplied with this fireplace. Due to the irregular size of the ember material, there may be more than required. Use of other foreign materials on the burners may create dangerous conditions.

If over time, through cleaning and servicing, these embers require replacement , contact your nearest Enviro dealer.



Figure 38: EG31 Log Placement Complete.

IMPORTANT: Upon the first light up after installing logs and embers, watch for ignition to ALL burner ports. If a long delay is noted wait for the appliance to cool down:

- Open the front door of the appliance
- Carefully reposition the embers, making sure that the burner ports are not plugged or blocked.



Figure 39: EG31 Log Set Burning.

BRICK PANEL INSTALLATION:

Remove the glass door and the log set. Remove the burner tray by undoing the hold-down screws located in the center of the pan burner and sliding the assembly to the left, then up.

Gently pull right brick side panel inward from the bottom back. Pull towards the back then out, freeing it from the front retainer.

Caution: The pilot may damage panel. Remove left side panel in the same fashion.

To install, insert front edge of brick panel into the retainer and very gently move panel forward and out until flush against firebox side.

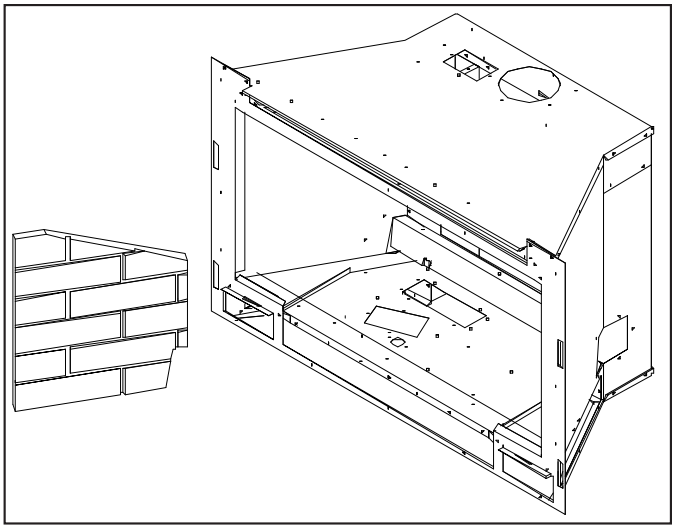

Figure 40: Brick Panel Installation.

Trouble Shooting

Problem	Possible Cause	Solution
The main burner does not ignite when called for.	The gas valve may not be on.	• Check that the gas control knob is in the "ON" position.
	Thermostat is not calling for heat.	• Adjust the thermostat several degrees above ambient temperature.
	Problem with gas valve.	• Use a DC voltmeter to measure the voltage across the TPTH and TP terminals. Main operator voltage: Open circuit ≥ 325mV Closed circuit ≥ 100mV • If voltage is not present, check the control circuit for proper operation. • If proper control system voltage is present, replace the gas control.
Spark will not light the pilot after repeatedly pressing the spark ignitor.	Defective piezo ignitor.	• Check connections to ignitor. • If ignitor connections are good but no spark, replace ignitor.
	Broken spark electrode.	• Check for broken ceramic insulation, replace electrode if broken.
	Misaligned spark electrode.	• If spark is not arcing from electrode to pilot, loosen the screws on the pilot base adjust and tighten.
Pilot will not remain lit.	Problem with thermocouple circuit.	• Check for proper connection of the thermocouple to the rear of the valve. If loose, fully tighten. • Check pilot for full flame impingement around thermocouple. If flame is too small, check gas pressure, adjust pilot rate screw, check pilot head for damage. • Check thermocouple voltage at valve. It must be greater than 5 mV. If low, replace thermocouple.
	Air in gas line (pilot dies while knob is depressed).	• Bleed line. • Check gas line pressure. • Contact dealer.
Burners will not remain lit.	Problem with thermopile circuit.	• Check gas line pressure . • Check for flame impingement on thermopile. If low, see "Pilot will not remain lit". • Check thermopile for minimum of 300 mV when burner is switched on. • Check wiring to thermostat for breaks. **BV ONLY:** Check for spillage at draft hood that may trip spill switch
Flame lifting	Leak in vent pipe	• Check for leaks in vent connections.
	Improper vent configuration	• Check vent configuration with manual.
	Terminal may be recirculating flue gases	• Check to see if terminal is on correctly. • May need to install high wind termination cap. • Contact dealer.
Glass fogs up	Normal Condition: after the appliance warms up the glass will clear. **Due to additives in gas, glass may get hazy during operation** Clean as needed.	
Blue Flames	Normal during start up: flames will yellow as the fireplace heats up.	
Flames are burning "dirty" or sooting	Flame impingement	• Check log positioning. • Increase primary air by opening the venturi shutter and/or by opening the vent restrictor. See also "Burners will not remain lit."
Remote control doesn't work	Problem with the remote	• One or more of the batteries are dead. See remote control instructions.
	Problem with fireplace	• The on/off switch is turned to OFF. • The gas control valve is turned to PILOT or OFF. • The pilot has gone out.
BV ONLY: Insufficient air for combustion	• Air tight house. • A vacuum in room due to other air-moving device.	• Supply make up air to the unit.

Parts List - Components

Reference Number	Part Description	Part Number
1	120°F (49°C) Ceramic Fan Temperature Sensor	EC-001
2	300°F (149°C) Spill Switch	EC-003
3	Thermocouple	EC-009
3	Spark Electrode with Ignitor Cable	EC-011
3	Thermopile	EC-012
3	Fully Assembled Pilot NG	EC-015
3	Fully Assembled Pilot LP	EC-016
3	Pilot Orifice NG Threaded	EC-019
3	Pilot Orifice LP Threaded	EC-020
3	Pilot Gasket	EC-021
4	S.I.T. Piezo Ignitor	EC-023
	Stainless Steel Flex Connector with ⅜" Elbow 18" Long	EC-024
5	FPI Burner Switch	EC-026
6	FPI Fan Controller - 115 V	EC-039
6	FPI Fan Controller Knob	EC-041
	Domestic Power Cord - 115 V	EC-042
	Heyco Strain Relief	EC-044
	Embers (Coal & Wool)	EC-046
7	Convection Blower - 115 V	EC-069
8	Burner Control Assembly NG	EG31-052
8	Burner Control Assembly LP	EG31-053
	Burner Switch Bracket	EG31-075
	Relief Door Gasket	EG31-087
	Window Channel Tape (6 feet)	EG31-089
9	Glass With Tape (6 feet)	EG31-090

Parts List - Components

Reference Number	Part Description	Part Number
10	Door Only - Painted	EG31-092
11	Venturi	EG31-099
	Owner's Manual	EG31-118
	⅜" NTP Male ⅜ Comp. 90° Elbow	EG31-124
	¼" NTP Female ⅜ Comp. 90° Elbow	EG31-125
	LP to NG Conversion Kit	EG31-200
	NG to LP Conversion Kit	EG31-202
12	Conversion Kit BV to DV	EG31-205
13	Conversion Kit DV to BV	EG31-206
	Extension Knob (Pilot)	30-030
	Extension Knob (HI-LO)	30-031
	Relief Door & Gasket	30-034
14	Blank Orifice #73	50-343
	BV Flue Collar Gasket	50-528
	DV Flue Collar Gasket	50-529
	Log Set & Embers	50-588
15	Ceramic Brick Liner	50-610
	Dual Bulb Door Gasket (10 feet)	50-634
16	Pan Burner Only	50-897
17	S.I.T. Nova Valve Convertible	50-1421
	EG31 Conversion Kit LP to NG Convertible	50-1434
	EG31 Conversion Kit NG to LP Convertible	50-1435
	S.I.T. Valve Conversion Screw With O-Ring	50-1450
	S.I.T. Valve Conversion Screw Cap	50-1451
	Control Panel Decal	50-1539
18	Door with Glass & Gasket	50-1822
-	Replacement EG31 Safety Screen	50-3075

Parts Diagram - Body

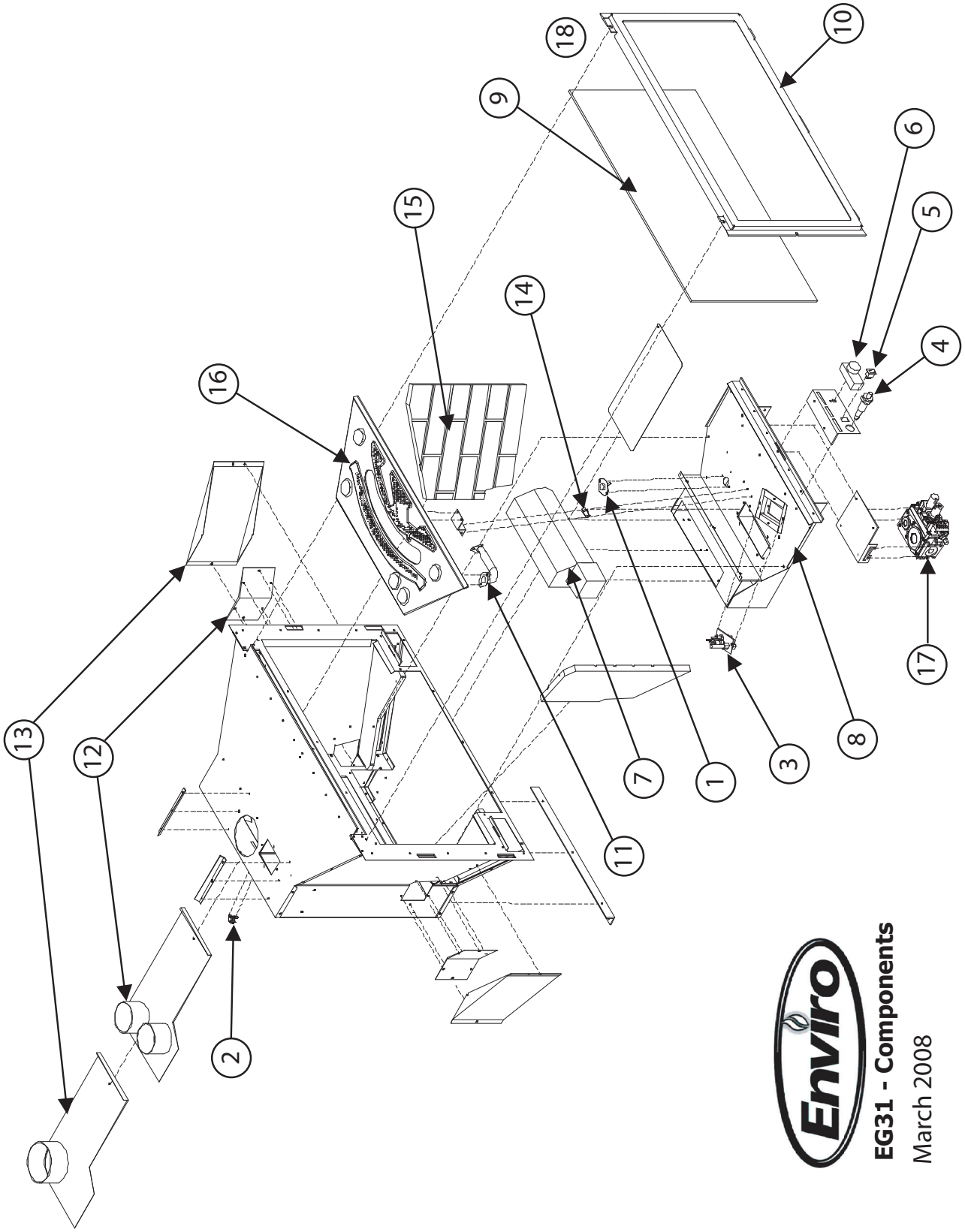

Notes

Warranty for Enviro **Gas** Products

Sherwood Industries Ltd. ("Sherwood") hereby warrants, subject to the terms and conditions herein set forth, this product against defects in material and workmanship during the specified warranty period starting from the date of original purchase at retail. In the event of a defect of material or workmanship during the specified warranty period, Sherwood reserves the right to make repairs or to assess the replacement of a defective product at Sherwood's factory. The shipping costs are to be paid by the consumer. All warranties by Sherwood are set forth herein and no claim shall be made against Sherwood on any oral warranty or representation.

Conditions

- A completed warranty registration must be submitted to Sherwood within 90 days of original purchase via the online warranty registration page or via the mail-in warranty registration card provided. Have the installer fill in the installation data sheet in the back of the manual for warranty and future reference.
- This warranty applies only to the original owner in the original location from date of install.
- The unit must have been properly installed by a qualified technician or installer, and must meet all local and national building code requirements.
- The warranty does not cover removal and re-installation costs.
- Sherwood Industries Ltd. reserves the right to make changes without notice.
- Sherwood Industries Ltd. and its employees or representatives will not assume any damages, either directly or indirectly caused by improper usage, operation, installation, servicing or maintenance of this appliance.
- A proof of original purchase must be provided by you or the dealer including serial number.

Exclusions

An expanded list of exclusions is available at www.enviro.com/help/warranty.html

This warranty does not cover:

- Damage as a result of improper usage or abuse.
- Damage caused from over-firing due to incorrect setup or tampering.
- Damage caused by incorrect installation.
- Any discolouration of the safety screen.

To the Dealer

- Provide name, address and telephone number of purchaser and date of purchase.
- Provide date of purchase. Name of installer and dealer. Serial number of the appliance. Nature of complaint, defects or malfunction, description and part # of any parts replaced.
- Pictures or return of damaged or defective product may be required.

To the Distributor

- Sign and verify that work and information are correct.

Sherwood Industries Ltd.
6782 Oldfield Road, Victoria, BC . Canada V8M 2A3
Online warranty registration: www.enviro.com/warranty/

Category	One Year	Two Year	Limited Lifetime (7yr)
Parts [1] (unit serial number required)		✔	
Firebox Liner Panels (excluding porcelain)		Ceramic	Steel
Firebox			✔
Heat Exchanger			✔
Burner			✔
Ceramic Logs [2]			✔
Ceramic Glass [3]	✔		
Pedestal / Legs (excluding finish)			✔
Door Assembly			✔
Surround Panels (excluding finish)			✔
Exterior Panels (excluding finish)			Up to 5 years
Electrical Components		✔	
Exterior Surface Finishing [4]	✔		
Labour	✔		

[1] Whereas warranty has expired, replacement parts will be warrantied for 90 days from part purchase date. Labour not included. Unit serial number required.

[2] Log set and panels excludes wear and tear or breakage caused by cleaning or service.

[3] Glass is covered for thermal breakage. Photos of box, inside of door, and unit serial # must be supplied for breakage due to shipping.

[4] Exterior Surface finishing covers plating, enamel or paint and excludes colour changes, chipping, and fingerprints.

Travel costs not included.

Jan 2013

Installation Data Sheet

The following information must be recorded by the installer for warranty purposes and future reference.

NAME OF OWNER:

_____

ADDRESS:

_____

_____

_____

PHONE:_____

NAME OF DEALER:

_____

ADDRESS:

_____

_____

_____

PHONE:_____

MODEL:_____

SERIAL NUMBER:_____

DATE OF PURCHASE: _____ (dd/mm/yyyy)

DATE OF INSTALLATION:_____(dd/mm/yyyy)

☐ NATURAL GAS (NAT) ☐ PROPANE(LPG)

INLET GAS PRESSURE:_____in wc

MAIN BURNER ORIFICE:_____# DMS

PILOT ORIFICE #_____OR_____in diam.

INSTALLER'S SIGNATURE:

_____

NAME OF INSTALLER:

_____

ADDRESS:

_____

_____

_____

PHONE:_____

MANUFACTURED BY:
SHERWOOD INDUSTRIES LTD.
6782 OLDFIELD RD. SAANICHTON, BC, CANADA V8M 2A3
www.enviro.com
March 29, 2016
C-14867