WARRANTY REGISTRATION
enviro.com/warranty

E33GI

GAS INSERT - GLASS BURNER WITH IPI VALVE

OWNER'S MANUAL



Listed By O-T-L Portland Oregon USA
c US
OMNI-Test Laboratories, Inc.

WARNING: If the information in this manual is not followed exactly, a fire or explosion may result causing property damage, personal injury or loss of life. Installation and service must be performed by a qualified installer, service agency or the gas supplier.

Fr Version Française: www.enviro.com/fr.html

Safety Precautions

WARNING:

FIRE OR EXPLOSION HAZARD

Failure to follow safety warnings exactly could result in serious injury, death, or property damage.

- Do not store or use gasoline or other flammable vapors and liquids in the vicinity of this or any other appliance.

- WHAT TO DO IF YOU SMELL GAS

- **Do not try to light any appliance.**
- **Do not touch any electrical switch; do not use any phone in your building.**
- **Leave the building immeadiately.**
- **Immeadiately call your gas supplier from a neighbor's phone. Follow the gas supplier's instructions.**
- **If you cannot reach your gas supplier, call the fire department.**

- Installation and service must be performed by a qualified installer, service agency or the gas supplier.

INSTALLER:
Leave this manual with the appliance.

CONSUMER:
Retain this manual for future reference.

This appliance may be installed in an after-market permanently located, manufactured (mobile) home, where not prohibited by local codes.

This appliance is only for use with the type of gas indicated on the rating plate. This appliance is not convertible for use with other gases, unless a certified kit is used.

Massachusetts installations (Warning): This product must be installed by a licensed plumber or gas fitter when installed within the Commonwealth of Massachusetts. Other Massachusetts code requirements: Flexible connector must not be longer than 36in., a shut off valve must be installed; only direct vent sealed combustion products are approved for bedrooms/bathrooms. A carbon monoxide detector is required in all rooms containing gas fired direct vent appliances. The fireplace damper must be removed or welded in the open position prior to installation of a fireplace insert.

Safety Precautions

FOR SAFE INSTALLATION AND OPERATION OF YOUR "ENVIRO" HEATER, PLEASE CAREFULLY READ THE FOLLOWING INFORMATION:

• All ENVIRO gas-fired appliances must be installed in accordance with their instructions. Carefully read all the instructions in this manual first. Consult the building authority having jurisdiction to determine the need for a permit prior to commencing the installation.

• **NOTE:** Failure to follow these instructions could cause a malfunction of the fireplace, which could result in death, serious bodily injury, and/or property damage.

• Failure to follow these instructions may also void your fire insurance and/or warranty.

GENERAL

• Installation and repair should be done by a qualified service person. The appliance should be inspected before the first use and, at least, annually by a qualified service person. More frequent cleaning may be required due to excessive lint from carpeting, bedding material, etc. It is imperative the control compartments, burners and circulating air passageways of the appliance be kept clean.

• Due to high temperatures, the appliance should be located out of high traffic areas and away from furniture and draperies.

Children and adults should be alerted to the hazards of high surface temperatures and should stay away to avoid burn or clothing ignition.

• Young children should be carefully supervised when in the same room as the appliance. Toddlers, young children and others may be susceptible to accidental contact burns. A physical barrier is recommended if there are at risk individuals in the house. To restrict access to a fireplace or stove install an adjustable safety gate to keep toddlers, young children and other at risk individuals out of the room and away from hot surfaces. Any safety screen, guard, or barrier removed for servicing an appliance must be replaced prior to operating the appliance.

• Clothing or other flammable materials should not be placed on or near the appliance.

DANGER



HOT GLASS WILL CAUSE BURNS

DO NOT TOUCH GLASS UNTIL COOLED.

NEVER ALLOW CHILDREN TO TOUCH GLASS.

A barrier designed to reduce the risk of burns from the hot viewing glass is provided with this appliance and shall be installed for the protection of children and other at-risk individuals.

• A barrier designed to reduce the risk of burns from the hot veiwing glass is provided with this appliance and shall be installed for the protection of children and other at-risk individuals. If the barrier becomes damaged, the barrier shall be replaced with the manufacturer's barrier for this appliance

FOR YOUR SAFETY

• Installation and service must be performed by a qualified installer, service agency or gas supplier.

• This installation must conform to local codes or, in the absence of local codes, with the National Fuel Gas Code, ANSI Z223.1/NFPA 54, or the Natural Gas and Propane Installation Code, CSA B149.1.

• To prevent injury, do not allow anyone who is unfamiliar with the stove to operate it.

• To prevent injury, if the pilot or pilot and burners have gone out on their own, open the glass door and wait 5 minutes to air out before attempting to re-light the stove.

• Always keep the area around these appliances clear of combustible material, gasoline and other flammable liquids and vapours.

• These appliances should not be used as a drying rack for clothing or for hanging Christmas stockings/decorations.

• Due to the paint curing on the stove, a faint odor and slight smoking will likely be noticed when the stove is first used. Open a window until the smoking stops.

Always connect this gas stove to a vent system and vent to the outside of the building envelope. Never vent to another room or inside the building. Make sure the specified vent pipe is used, properly sized and of adequate height to provide sufficient draft. Inspect the venting system annually for blockage and signs of deterioration.

WARNING: Failure to position the parts in accordance with the diagrams in this booklet, or failure to use only parts specifically approved with this appliance, may result in property damage or personal injury.

WARNING: Do not operate with the glass front removed, cracked or broken. Replacement of the glass should be done by a licensed or qualified service person.

• Never use solid fuels such as wood, paper, cardboard, coal, or any flammable liquids, etc., in this appliance.

• Do not use this appliance if any part has been under water. Immediately call a qualified service technician to inspect the appliance and to replace any part of the control system or any gas control which has been under water.

• Do not abuse the glass by striking it or slamming the door shut.

• If the E33GI unit is pulled out of its installation, and the vent-air intake system is disconnected for any reason, ensure that the vent-air intake pipes are reconnected and re-sealed in accordance to the instructions noted in Initial Installation - Venting Fireplace Inserts.

Table of Contents

Safety Precautions....2
Table of Contents....4
Codes And Approvals....5
Specifications....6
- Rating Label Location....6
- Dimensions....6
- Install Depths....6
- E33GI Options Dimensions....7

Operating Instructions....8
- Lighting and Turning Off Instructions....8
- Venturi Adjustment....9
- Normal Sounds During Operation....9
- Remote Control Operations....9
- System Description....10
- Transmitter....10
- Battery Holder....11
- Battery Holder Location....12
- IFC Location....12
- Initializing the System for the First Time....13

Maintenance And Service....16
- Cleaning The Glass....16
- Cleaning The Firebox....16
- Replacing The Glass....16
- Check Pilot and Burner Flames....16
- Glass Door Removal....17
- Cleaning The Painted Surfaces....17
- Removing Valve Cover....17
- Fuel Conversion....19

Initial Installation....21
- Clearances to Combustibles....21
- Minimum Fireplace Size....21
- Direct Vent Model....21
- Venting Fireplace Inserts....22
- Direct Vent Vertical Vent Termination....24
- Installing the Unit....25
- Zero Clearance Fireplace Installation....26
- Electrical Requirements....26
- Gas Line Connection....28
- Adjusting The Pilot Flame....30

Secondary Installation....31
- Optional Base Shelf & Riser....31
- Surround Panel Screw Installation....32
- Optional 3 and 4 sided Trimmable Panels....33
- Surround Panel Installation....34
- Safety Screen Installation....35
- Firebox Liner and Burner Tray Removal / Installation....36
- Installing the Glass Burner Media....37

Trouble Shooting....38
Parts List....41
Parts Diagram - Components....43
Parts Diagram - Options....44
Notes....46
Warranty....47
Installation Data Sheet....48

Codes And Approvals

DIRECT VENT: This type is identified by the suffix DV. This appliance draws all of its air for combustion from outside the dwelling, through a specially designed vent pipe system.

This appliance has been tested and approved for installations from 0 feet to 4500 feet (1372 m) above sea level.

In the USA: The appliance may be installed at higher altitudes. Please refer to your American Gas Association guidelines which state: the sea level rated input of Gas Designed Appliances installed at elevations above 2000 (610 m) feet is to be reduced 4% for each 1000 feet (305 m) above sea level. Refer also to local authorities or codes which have jurisdiction in your area regarding the de-rate guidelines.

In Canada: When the appliance is installed at elevations above 4500 feet (1372 m), the certified high altitude rating shall be reduced at the rate of 4% for each additional 1000 feet (305 m).

- This appliance has been tested by OMNI-Test Laboratories and found to comply with the established VENTED GAS FIREPLACE HEATER standards in CANADA and the USA as follows:

DIRECT VENTED GAS FIREPLACE INSERT HEATER

TESTED AND LISTED TO: ANSI Z21.88-2014/CSA 2.33-2014 VENTED GAS FIREPLACE HEATERS

CAN/CGA 2.17-M91 (R2009) GAS FIRED APPLIANCES FOR HIGH ALTITUDES BY OMNI-TEST LABORATORIES

CSA P.4.1-2009 (R2014) TESTING METHOD FOR MEASURING ANNUAL FIREPLACE EFFICIENCY

This ENVIRO E33GI Fireplace Insert:

- Has been certified for use with either natural or propane gases. (See rating label.)
- Is not for use with solid fuels.
- Is approved for bedroom or bed sitting room. (**IN CANADA**: must be installed with a permanent wall thermostat for bedroom installations. Consult the authority having local jurisdiction in your area. **IN USA**: see current ANSI Z223.1 for installation instructions.)
- Must be installed in accordance with local codes. If none exist, use current installation code CAN/CGA B149 in Canada or ANSI Z223.1/NFPA 54 in the USA.
- Must be properly connected to an approved venting system and not connected to a chimney flue serving a separate solid-fuel burning appliance.
- Is not approved for closet or recessed installations.

IMPORTANT NOTICE (Regarding first fire up): When the unit is turned on for the first time, it should be turned onto high without the fan on for the first 4 hours. This will cure the paint, logs, gasket material and other products used in the manufacturing process. It is advisable to open a window or door, as the unit will start to smoke and can irritate some people. After the unit has gone through the first burn, turn the unit off, let the unit get cold then remove the glass door and clean it with a good gas fireplace glass cleaner, available at your local ENVIRO dealer. See "Door Removal" and "Cleaning The Glass" sections.

COLD CLIMATES:

NOTE: In cold climates, additional insulation may be used on some venting. It is recommended in cold climates to wrap the exhaust and intake venting for the final few feet before termination.

NATIONAL FIREPLACE INSTITUTE®

NFI

CERTIFIED

www.nficertified.org

We recommend that our gas hearth products be installed and serviced by professionals who are certified in the U.S. by the National Fireplace Institute® (NFI) as NFI Gas Specialists.

Specifications

Rating Label Location:

The rating label is located on the left side of the unit, next to the receiver box.

Dimensions:

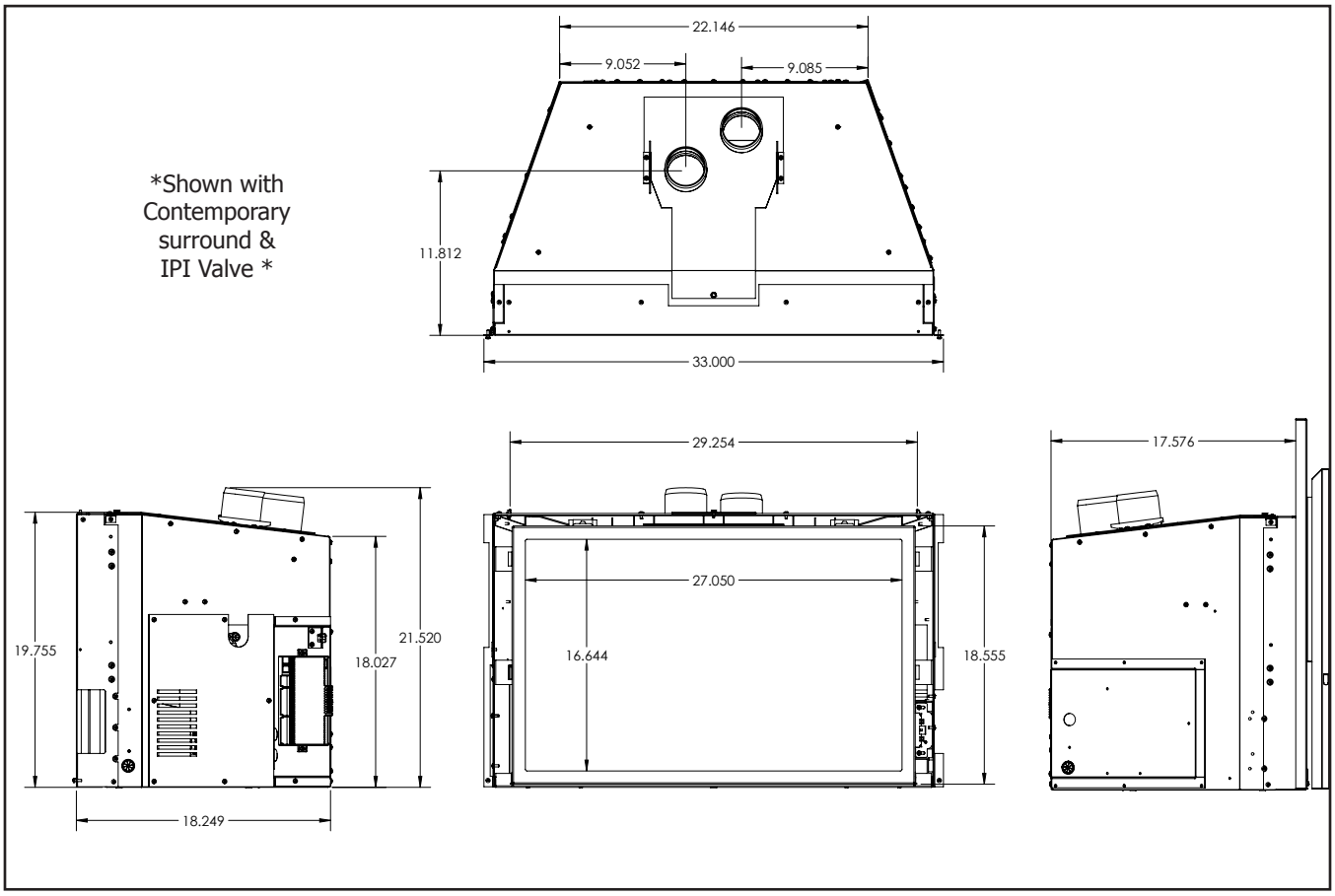

Figure 1: E33GI Exterior Dimensions.

Install Depth:

E33 IPI units have a minimum install depth of 17.50”. The table below shows what depth of install is required with each surround panel.

Surround Panel	Install Depth
Contemporary	17.50"
Modern	17.50"
Extruded	17.50"
Extruded Plus	18.00"
Borderview	19.00"
Borderview Plus	19.00"
Modern Plus	19.00"

Table 1: Install Depths

Specifications

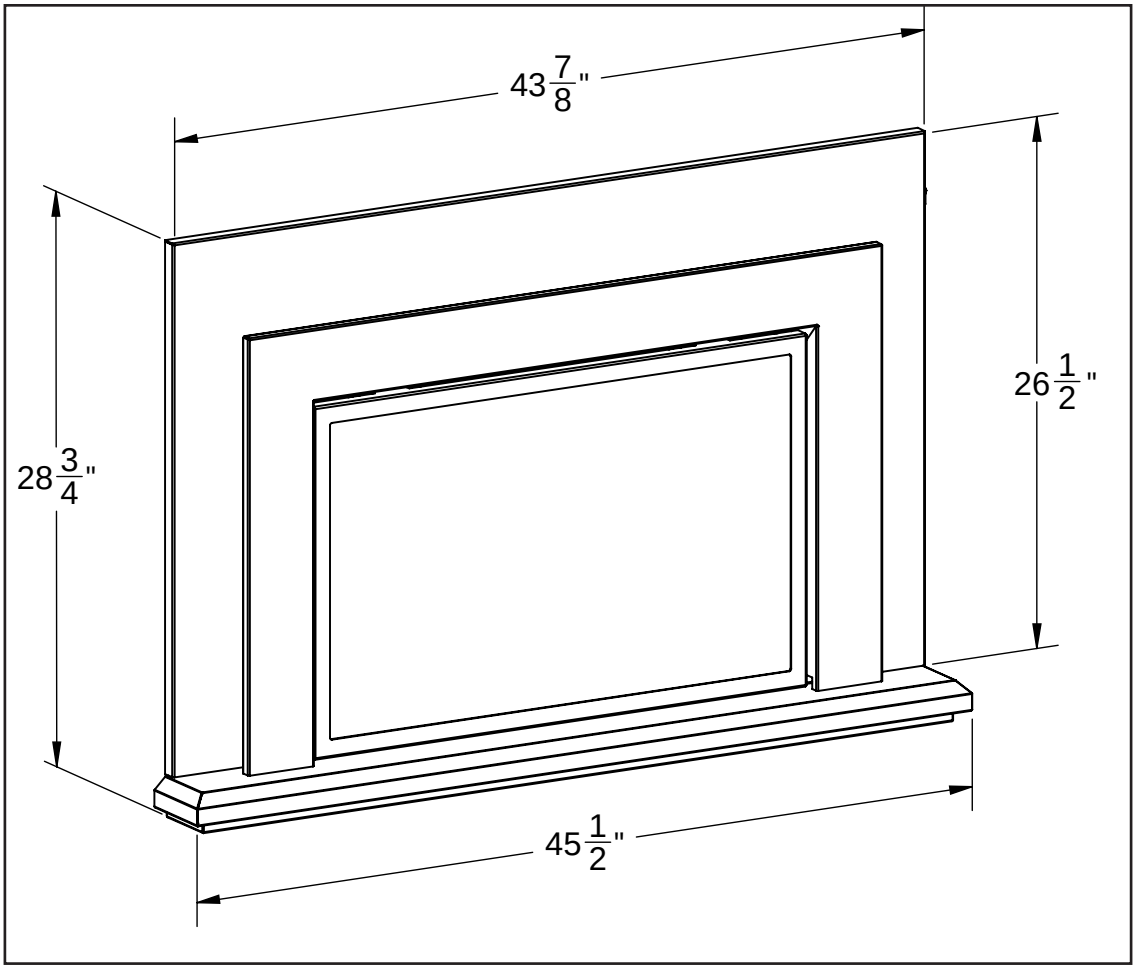

Figure 2: E33GI Contemporary Surround with Base Shelf and Riser.

Table 2: E33GI Options Dimensions.

	Regular Surround	**Contemporary Surround**	**Extruded Surround**
Height	26.5″ (673 mm)	26.5″ (673 mm)	26.5″ (673 mm)
Width	44 1/8″ (1121 mm)	44 1/8″ (1121 mm)	44 1/8″ (1121 mm)
Trimmable Surround	Height		Width
	38″ (965mm)		46″ (1168mm)
	Base Shelf		**Base Shelf Riser**
Height	1 5/8″ (41 mm)		2 1/8″ (54 mm)
Width	45 1/2″ (1156 mm)		44″ (1118 mm)
Depth	Bottom 4 7/8″ (112 mm); Top 3 13/16″ (97 mm)		3 11/16″ (94 mm)

Operating Instructions

For Your Safety, Read Safety Precautions And Lighting Instructions Before Operating

WARNING: IF YOU DO NOT FOLLOW THESE INSTRUCTIONS EXACTLY A FIRE OR EXPLOSION MAY RESULT, CAUSING PROPERTY DAMAGE, PERSONAL INJURY OR LOSS OF LIFE.

Lighting and Turning Off Instructions:

FOR YOUR SAFETY READ BEFORE OPERATING

WARNING: IF YOU DO NOT FOLLOW THESE INSTRUCTIONS EXACTLY, A FIRE OR EXPLOSION MAY RESULT CAUSING PROPERTY DAMAGE, PERSONAL INJURY OR LOSS OF LIFE.

A. This appliance is equipped with an ignition device which automatically lights the pilot. Do not try to light the pilot by hand.

B. BEFORE OPERATING smell all around the appliance area for gas. Be sure to smell next to the floor because some gas is heavier than air and will settle on the floor.

WHAT TO DO IF YOU SMELL GAS:

- Do not try to light any appliance.
- Do not touch any electrical switch; do not use any phone in your building.
- Immediately call your gas supplier from a neighbor's phone. Follow the gas supplier's instructions.
- If you cannot reach your gas supplier, call the fire department.

C. Use only your hand to push in or turn the gas control knob. Never use tools. If the knob will not push in or turn by hand, don't try to repair it, call a qualified service technician. Force or attempted repair may result in a fire or explosion.

D. Do not use this appliance if any part has been under water. Immediately call a qualified service technician to inspect the appliance and to replace any part of the control system and any gas control which has been under water.

OPERATING INSTRUCTIONS

1. STOP! Read the safety information above on this label.
2. Read the owner's manual including the section on "Remote Control" operation.
3. Set the thermostat to the lowest setting.
4. Turn off all electric power to the appliance.
5. Do not attempt to light the pilot by hand.
6. Wait five (5) minutes to clear out any gas. Then smell for gas, including near the floor. If you smell gas, STOP! Follow "B" in the safety information above on this label. If you don't smell gas, go to the next step.
7. Turn on all electric power to the appliance.
8. Using the remote control, set thermostat to desired setting, or press the ON/OFF key on the remote. "ON" will be indicated on the display of the remote and an audible "beep" will be heard at the unit to indicate the command has been received.
9. This appliance is equipped with a completely automatic ignition and lighting control. The control will attempt to light the pilot several times if necessary. If it is unsuccessful, it will discontinue operations. If the appliance will not operate, follow the instructions "To Turn Off Gas To Appliance" and call your service technician or gas supplier.

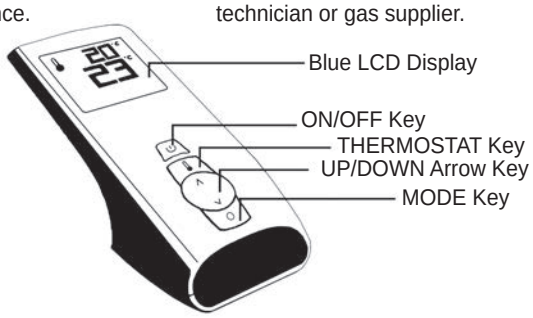

TO TURN OFF GAS TO APPLIANCE

1. Set thermostat to lowest setting, or press the ON/OFF Key. "OFF" will be indicated on the display and an audible "Beep" will be heard at the unit to indicate the command has been received.
2. Turn off all electric power to the appliance if service is to be performed.

C-12455

Figure 3: Lighting instruction label.

Operating Instructions

Venturi Adjustment:

The venturi adjustment lever is located on the right side of the unit, behind the surround panel (see Figure 4). To avoid touching hot surfaces under the unit, use the Door Tool to adjust the venturi.

The venturi allows the amount of air coming into the fireplace to be adjusted in order to accommodate different climates and venting arrangements. Start the pilot and then the burner. Make sure the pilot flame is burning normally and none of the burner ports are plugged. Let the fireplace burn for roughly fifteen (15) minutes and then examine the flames. The ideal flame will be blue at the base and light orange above. The flames should be of medium height. If the flames look like this, no venturi adjustment is needed. If the flames are fairly short and mostly blue, the fireplace is getting too much air. Therefore, the air shutter should be closed (push in) slightly until the correct flames are achieved. Flames that are very orange, with tall dark stringy tips are not getting enough air. Open (pull out) the venturi until the flames clean up. If the venturi is opened, then closed all the way, and the correct flames cannot be attained, turn off the gas and contact the dealer.

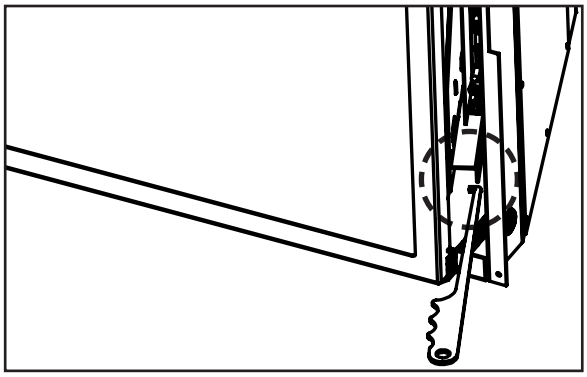

Figure 4: Adjusting the venturi air setting.

Warning: Incorrect venturi adjustment may lead to improper combustion, which is a safety hazard. Contact the dealer if there is any concern about the venturi adjustment.

Normal Sounds During Operation:

Component	Sound & Reason
Fire Box	Creaking when heating up or cooling down.
Burner	Light pop or poof when turned off; this is more common with LP units.
Temperature Sensor	Clinking when it senses to turn the blower on or off.
Pilot Flame	Quiet whisper while the pilot flame in on.
Blower / Fan	Air movement that increases and decreases with the speed of the blower.
Gas Control Valve	Dull click when turning on or off, this is the valve opening and closing.
Receiver	Beeps when remote control buttons are pressed.

Table 3: Normal Sound

Remote Control Operations:

The Proflame 2 GTMFL is a modular remote control system that directs the functions of the E33GI. The Proflame 2 GTMFL is configured to control the on/off main burner operation, its flame levels and provides on/off and Smart thermostatic control of the appliance. The system controls a remotely actuated 120V/60Hz power outlet, and fan speed through six (6) levels.

Operating Instructions

System Description:

The Proflame 2 Remote Control System consists of two (2) elements:
1. Proflame 2 Transmitter.
2. Integrated Fireplace Controller (IFC) and a wiring harness to connect the Receiver to the gas valve, stepper motor and Battery Holder.

ATTENTION!

- TURN "OFF" THE MAIN GAS SUPPLY OF THE APPLIANCE DURING INSTALLATION OR MAINTENANCE OF THE RECEIVER.

- TURN "OFF" MAIN GAS SUPPLY TO THE APPLIANCE PRIOR TO REMOVING OR REINSERTING THE BATTERIES IN THE BATTERY HOLDER

Technical Data

Transmitter (Remote Control):

Supply voltage: 4.5 V (three 1.5 V AAA batteries)
Radio frequency: 315 MHz

Integrated Fireplace Controller (IFC):

Supply voltage: AC IN - 120 V / 60 Hz
Battery Backup IN - 6 Vdc - 200mA (four 1.5 V AA batteries)
Spark voltage / frequency: >10kV / 1Hz
Comfort modulating fan: 120 V / 60 Hz / 2A
Auxiliary: 120 V / 60 Hz / 5A (not used)

Transmitter:

The Proflame 2 Transmitter is a remote control with a blue backlit lcd display. It uses a streamline design with a simple button layout and informative lcd readout (Figure 5). The Transmitter is powered by three (3) AAA type batteries. A Mode Key is provided to Index between the features and a Thermostat Key is used to turn on/off or index through Thermostat functions (Figure 5 & 6)

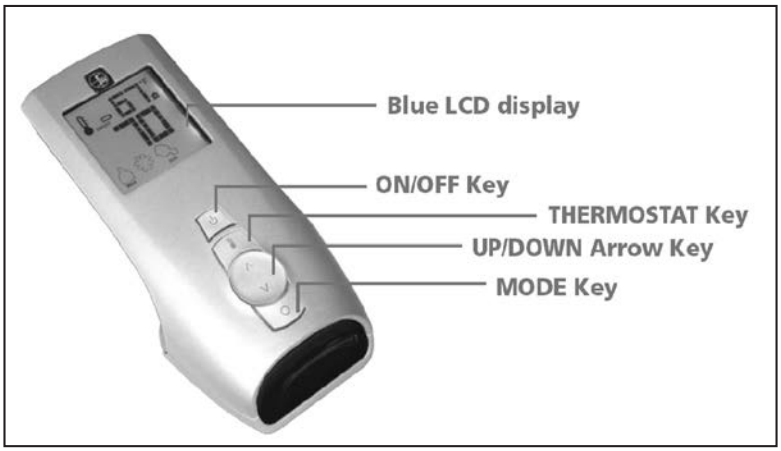

Figure 5: Proflame 2 Transmitter.

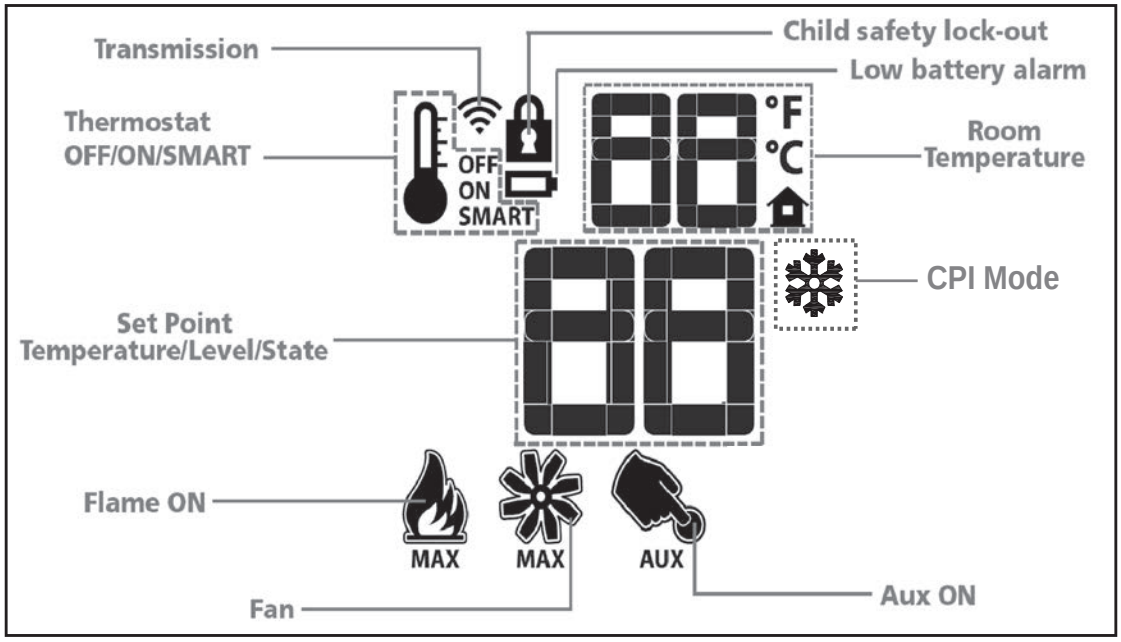

Figure 6: Proflame 2 Transmitter LCD Screen.

Battery Holder:

The Battery Holder (Figure 7) connects directly to the IFC with a wiring harness. The IFC is powered by four (4) AA type batteries. The IFC accepts commands via radio frequency from the Transmitter to operate the appliance in accordance with the particular Proflame system configuration. The Battery Holder has a three (3) position slider switch that can be set to one of three positions: ON (Manual Override), Remote (Remote control), or Off. The Battery Holder has a reset button at the front right corner that is used is to synchronize the Transmitter when using the for the first time, or after the batteries have been replaced.

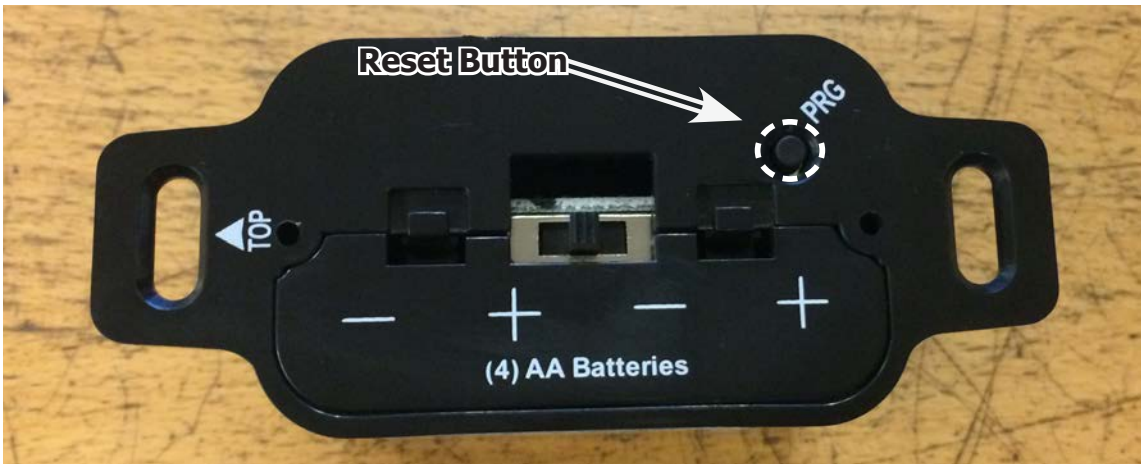

Figure 7: Battery Holder.

Battery Holder Location:

The Battery Holder is located in the bottom right side of the stove as shown in Figure 8. The Battery Holder will be used to inistialize the syatem.

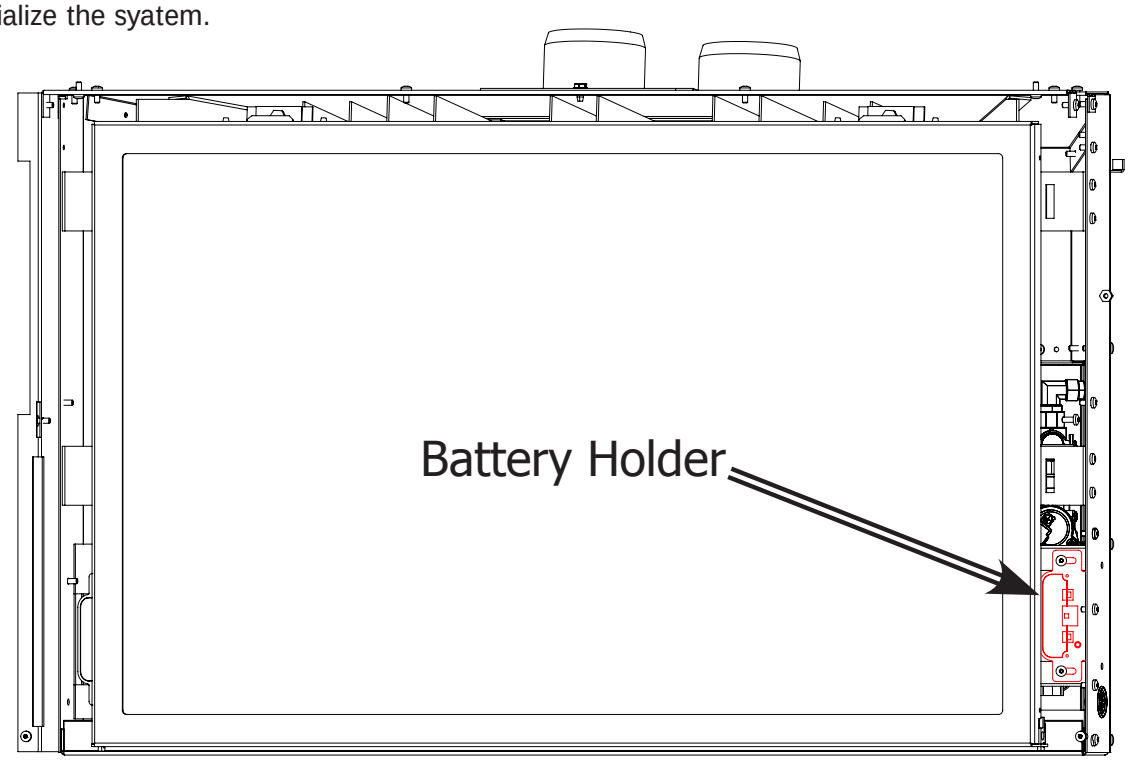

Figure 8: Battery Holder Location.

IFC Location:

The IFC is located on the back right side of the stove as shown in Figure 9. The IFC controls the ingnition and can be used for troubleshooting.

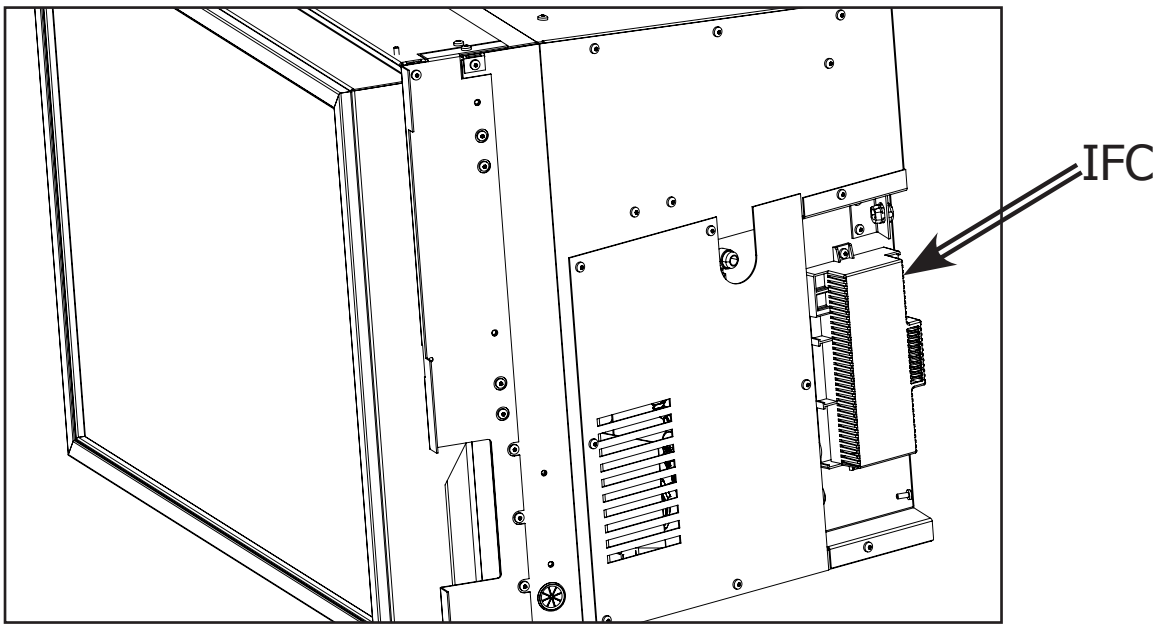

Figure 9: IFC Location.

Operating Procedure:

Initializing The System For The First Time

Install the four (4) AA batteries into the IFC battery holder. Note the polarity of the battery and insert into the battery bay as indicated on the body of the battery holder. Press the reset button on the Battery Holder marked "PRG" (see Figure 7).

The IFC will "beep" three (3) times to indicate that it is ready to synchronize with a Transmitter. Install the three (3) AAA type batteries in the Transmitter battery bay, located on the base of the Transmitter. With the batteries already installed in the Transmitter, push the 'ON' button. The IFC will "beep" four (4) times to indicate the Transmitter's command is accepted and sets to the particular code of that Transmitter. The system is now initialized.

Temperature Indication Display

With the system in the "OFF" position, press the Thermostat Key and the Mode Key at the same time. Look at the LCD screen on the transmitter to verify that a °C or °F is visible to the right of the Room Temperature display (see Figure 10).

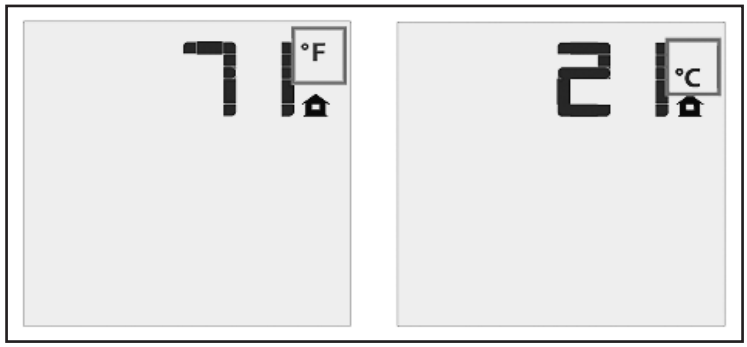

Figure 10: Remote Control Display in Farenheit and Celcius.

Turn on the Appliance

Press the ON/OFF Key on the Transmitter. The Transmitter display will show all active Icons on the screen. A single "beep" from the Receiver will confirm reception of the command and will commence to first ignite the pilot light, followed by the main burner. This should take about 10 seconds to complete.

Switching to Continuous Pilot Mode:

When the E33GI is turned off press the mode key to index to the constant pilot (CPI) mode icon (see figure 11). Pressing the up arrow key will select Continuous Pilot Ignition (CPI) and pressing the down arrow key will return to IPI. Once a selection is made the IFC will beep once to confirm it had received the command. **NOTE: It is recommended to use the continuous pilot mode during the winter when the outside temperature is below 50°F (10°C) to keep the chimney properly heated for updraft during burner ignition.** Continuous pilot mode also keeps the firebox warm which eliminates both heat loss to cold air that is trapped inside the firebox as well as excessive exhaust vapour condensation on the door glass.

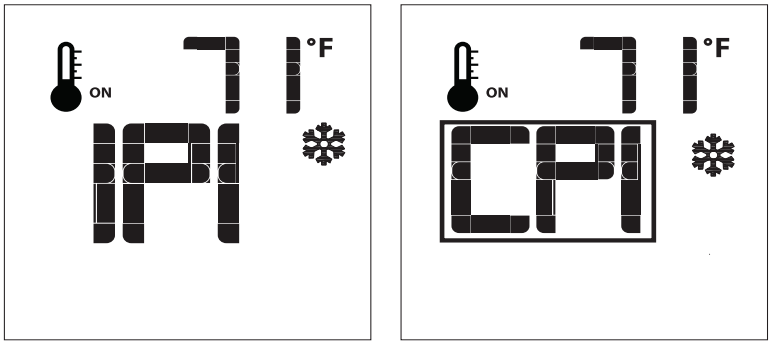

Figure 11: CPI Pilot Mode.

Turn off the Appliance

Press the ON/OFF Key on the Transmitter. The Transmitter LCD display will only show the room temperature and Icon (see Figure 12). A single "beep" from the IFC confirms reception of the command and both the pilot light (if the unit is not set to continuous pilot) and main burner will turn off.

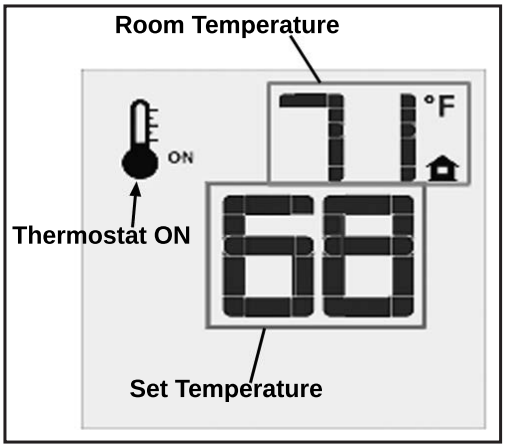

Figure 12: Remote Control Displays Set Temperature.

Room Thermostat (Transmitter Operation)

The Remote Control can operate as a room thermostat. The thermostat can be set to a desired temperature to control the comfort level in a room. To activate this function, press the Thermostat Key (see Figure 5). The LCD display on the Transmitter will change to show that the room thermostat is "ON" and the set temperature is now displayed (see Figure 12). To adjust the set temperature, press the Up or Down Arrow Keys until the desired set temperature is displayed on the LCD screen of the Transmitter.

Smart Thermostat (Transmitter Operation)

The Smart Thermostat function adjusts the flame height in accordance to the difference between the set point temperature and the actual room temperatures. As the room temperature gets closer to the set point the Smart Function will modulate the flame down. To activate this function, press the Thermostat Key (Figure 5) until the word "SMART" appears to the right of the temperature bulb graphic (Figure 13). To adjust the set temperature, press the Up or Down Arrow Keys until the desired set temperature is displayed on the LCD screen of the Transmitter.

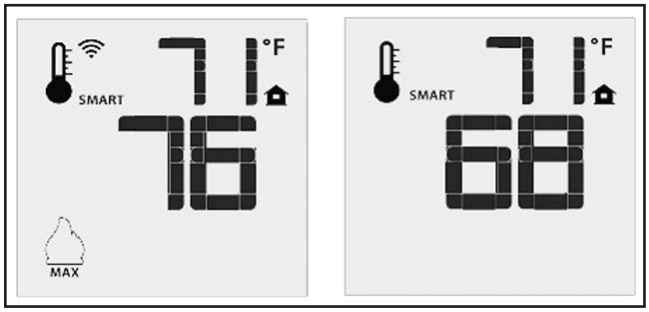

Figure 13: Remote Control's Smart Flame Function.

Remote Flame Control

The Proflame 2 GTMF has six (6) flame levels. With the system on, and the flame level at the maximum in the appliance, pressing the Down Arrow Key once will reduce the flame height by one step until the flame is turned off. The Up Arrow Key will increase the flame height each time it is pressed. If the Up Arrow Key is pressed while the system is on but the flame is off, the flame will come on in the high position (refer to Figure 14). A single "beep" will confirm reception of the command.

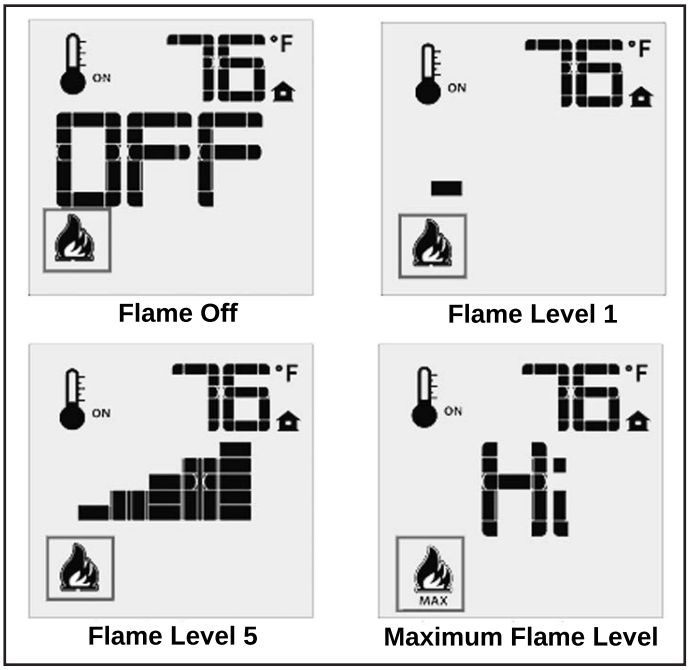

Figure 14: Remote Control's Flame Levels.

Fan Control
The E33GI comes with a convection fan that can be controlled with the Transmitter. The fan speed can be adjusted thorugh six (6) speeds. To control the fan press the MODE key (Figure 5) to index to the fan control icon (Figure 15). Use the UP/DOWN arrow keys to turn on, off, or adjust the fan speed (Figure 15). A single beep from the IFC will confirm the command has been received

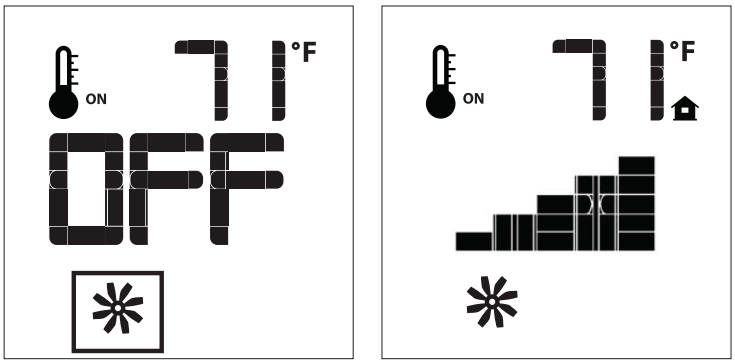

Figure 15: Fan Control

Key lock
This function will lock the keys to avoid unsupervised operation. To activate this function, press the MODE and UP keys at the same time and the a lock will appear (see Figure 17). To de-activate this function, press the MODE and UP Keys at the same time.

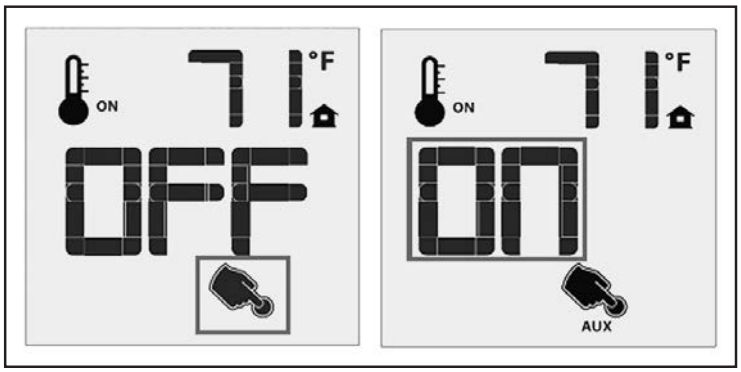

Figure 16: Remote Control with Aux (not used)

Low Battery Power Detection
Transmitter: The life span of the remote control batteries depends on various factors: quality of the batteries used, the number of ignitions of the appliance, the number of changes to the room thermostat set point, etc. When the Transmitter batteries are low, a Battery Icon will appear on the LCD display of the Transmitter (see Figure 18) before all battery power is lost. When the batteries are replaced this Icon will disappear.

IFC: The life span of the IFC batteries depends on various factors during a prolonged power outage: quality of the batteries used, the number of ignitions of the appliance, the number of changes to the room thermostat set point etc. When the IFC batteries are low, No "beep" will be emitted when it receives an On/Off command from the Transmitter. This is an alert for a low battery condition for the IFC. When the batteries are replaced the "beep" will be emitted from the Receiver when the ON/OFF Key is pressed (See Initializing the System for the First Time).

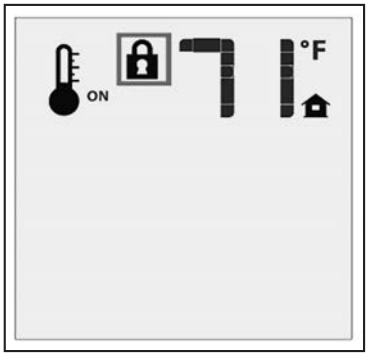

Figure 17: Remote Control Locked.

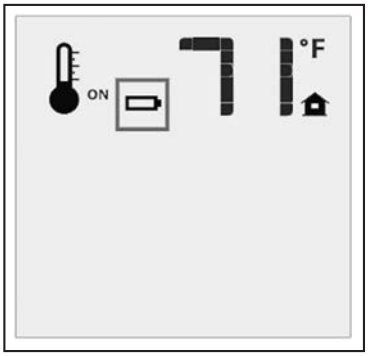

Figure 18: Low Battery Indicator.

WARNING: Fire Hazard. Can cause severe injury or death The Receiver causes ignition of the appliance. The appliance can turn on suddenly. Keep away from the appliance burner when operating the remote system or activating manual by pass of the remote system.

WARNING: Shock Hazard. Can cause severe injury or death. This device is powered by line voltage. Do not try to repair this device. In no way is the enclosure to be tampered with or opened. Disconnect from line voltage before performing any maintenance.

WARNING: Devices rated more than 5A shall not be connected to the OUT receptacle. Devices rated more than 1A shall not be connected to the FAN receptacle. Devices rated more than 2A shall not be connected to the AUX receptacle.

CAUTION: Property Damage Hazard. Excessive heat can cause property damage. The appliance can stay lit for many hours. Turn off the appliance if it is not going to be attended for any length of time. Always place the Transmitter where children cannot reach it.

Maintenance And Service

Warning: Failure to position the parts in accordance with this manual, or failure to use only parts specifically approved with this appliance, may result in property damage or personal injury.

At least once a year, run through the following procedures to ensure the system is clean and working properly. Check the burner to see if all the ports are clear and clean. Check the pilot to make sure it is not blocked by anything. The pilot flame should be blue with little or no yellow on the tips.

The venting system must be periodically examined; it is recommended the examination is done by a qualified person.

Cleaning The Glass:

When the fireplace is cool, remove the glass door. See Maintenance and Service - Glass Door Removal. Check the gasket material on the back of the glass, making sure that it is attached and intact.

During a cold start up, condensation will form on the glass. This is a normal condition with all fireplaces. However, this condensation can allow dust and lint to cling to the glass surface. Initial paint curing of the appliance can leave a slight film on the glass. The glass will need cleaning after the fireplace has cooled off from the first burn and about two weeks after first burn. **Use a mild glass cleaner and a soft cloth**. **Abrasive cleaners will damage the glass and painted surfaces.** Depending on the amount of use, the glass should require cleaning no more than two or three times a season. **Do not clean the glass when it is hot.**

Cleaning The Firebox:

Remove the logs carefully, as they are very fragile. Gently remove all the embers and rock wool and place on a paper towel. Vacuum the bottom of the firebox thoroughly. Carefully clean any dust off the logs and remove any lint from the burner and pilot. At this time, inspect the burner tube for cracking or severe warping. If a problem is suspected, contact the dealer. Check the logs for deterioration or large amounts of soot; a small amount on the logs is normal. Replace the logs and embers as in the Secondary Installation - Log Set and Ember Installation section. If new/more embers and rock wool are required, contact your nearest ENVIRO dealer.

Replacing The Glass:

The glass in the fireplace is a high temperature ceramic. If the glass is damaged in any way, a factory replacement is required (see Parts List). Wear gloves when handling damaged glass door assembly to prevent personal injury. Do not operate with the glass front removed, cracked or broken. Removal and replacement of the glass from the door **must** be done by a licensed or qualified service person. **The glass must be purchased from an ENVIRO dealer. No substitute materials are allowed.** Remove the door (see page 17). The replacement glass will come with a new gasket installed. Remove any silicone remnants from the door. Apply high temperature silicone to the two vertical faces of the door and install the new piece of glass with gasket (be sure to maintain edge clearances). Apply even pressure to the glass to allow the silicone to adhere to the gasket material.

Check Pilot and Burner Flames:

Periodically do a visual check of the pilot flames. One flame should encompass the flame sensor and the other should burn over glass (see Figure 19, pilot shield partially hidden). Also check that the burner is operating correctly, refer to Venturi Adjustment section.

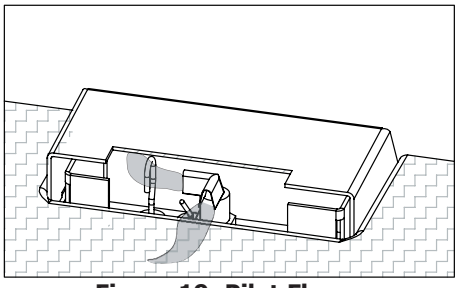

Figure 19: Pilot Flame

Maintenance And Service

Glass Door Removal:

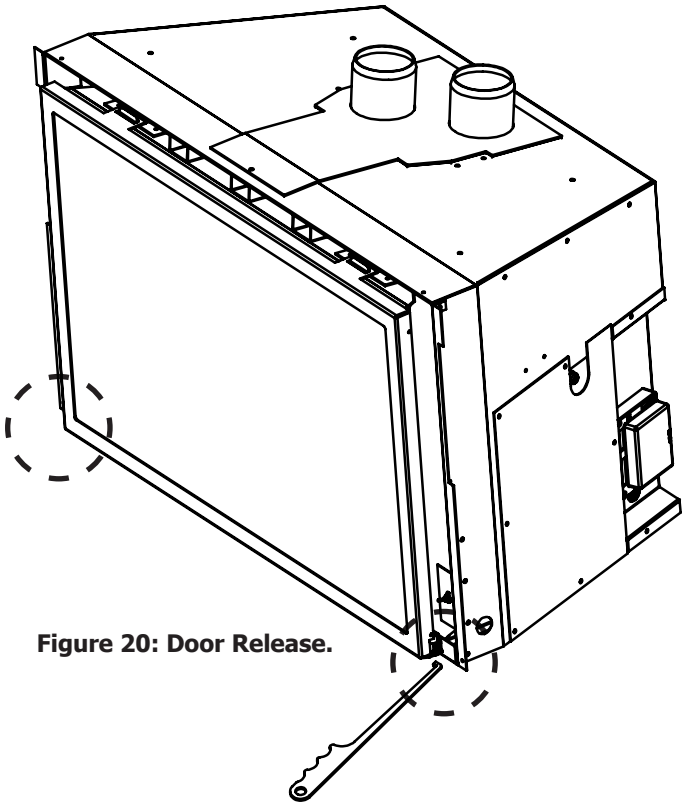

Figure 20: Door Release.

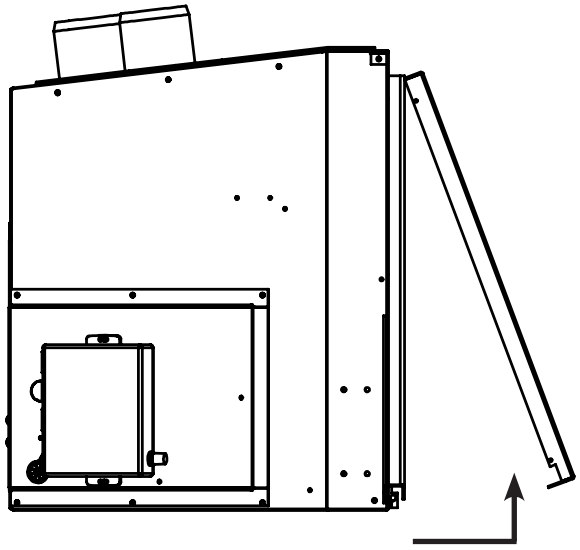

Figure 21: Door Removal.

Remove the glass door by placing the hooked end of the door release tool in the hole on the door latch mechanism (see Figure 20) and pulling the latch out then up. When the two (2) latches have been released, tilt the bottom of the door forward and then lift up to unhook the top door tabs (see Figure 21).

Re-assemble in the reverse order.

Warning: Do not touch or attempt to remove the glass if the fireplace is not completely cool.
Never operate the fireplace with the glass removed.

CAUTION GLASS MAY SEPARATE FROM DOOR.

Cleaning The Painted Surfaces:

Painted surfaces should be periodically wiped with a damp cloth when the unit is cool.

Removing Valve Cover:

The valve cover can be removed to access the gas valve.

1. Use a T-20 screwdriver to remove the eight screws that hold down the valve cover shown in Fig. 22.

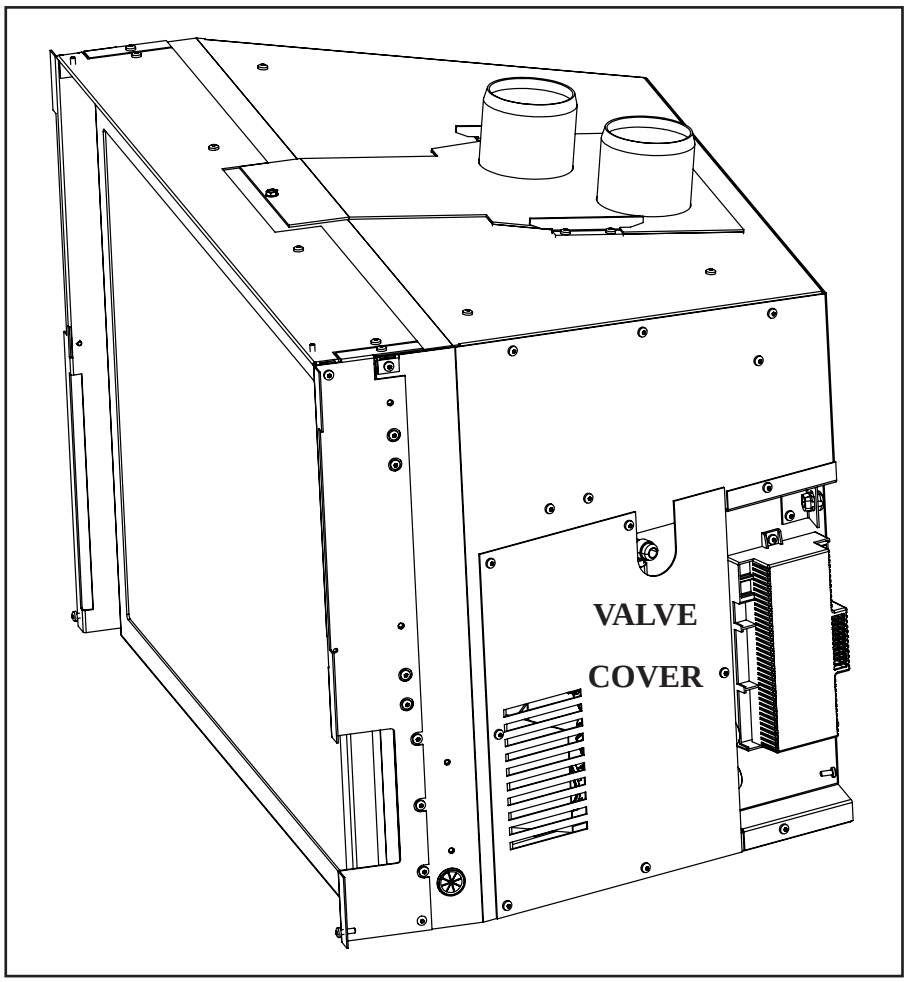

Figure 22: Valve Cover.

Fuel Conversion

TO BE INSTALLED BY A QUALIFIED SERVICE AGENCY ONLY

Please read and understand these instructions before installing.

WARNING: This conversion kit shall be installed by a qualified service agency in accordance with the manufacturer's instructions and all applicable codes and requirements of the authority having jurisdiction. If the information in these instructions is not followed exactly, a fire, explosion or production of carbon monoxide may result causing property damage, personal injury or loss of life. The qualified service agency is responsible for the proper installation of this kit. The installation is not proper or complete until the operation of the converted appliance is checked as specified in the manufacturer's instructions supplied with the kit.

Kit Parts List:

1 - Orifice (NG - #41 DMS or LP #54 DMS)
1 - Conversion label
1 - Servo regulator with diaphragm
1 - Installation instruction sheet

Carefully inspect the orifice supplied with this conversion kit. If it has been damaged or is missing, contact your dealer, distributor or courier company to have it replaced before starting this installation.

NOTE: The unit is shipped from the factory adjusted for use with NATURAL gas.

1. Ensure all the components of the conversion kit are accounted for.
2. If the unit has already been connected to a gas supply, shut off the gas supply to the unit.

CAUTION: The gas supply must be shut off prior to disconnecting the electrical power and before proceeding with the conversion.

3. If the unit has been run, shut off and allow cooling to room temperature.
4. Remove the glass as shown in the Maintenance and Service - Glass Door Removal.
5. Carefully remove the log set and ember material if they are installed.
6. Remove the burner as shown in the Maintenance and Service - Burner Removal.
7. Convert the pilot injector:
   a) Using a $^{7}/_{16}$" wrench, turn the pilot head a ¼ turn counter-clockwise.
   b) Push the slider, with your finger or flat head screwdriver.
      -Natural gas is marked NAT.
      -Propane gas is marked LP with an indicating hole between L and P. It is also marked red.
   c) Turn the pilot head a ¼ turn clockwise; back to its original position.
8. Convert the burner orifice(s):
   a) Remove the main burner orifice with a 1/2" deep socket.
   b) Put a bead of pipe-thread sealant on the orifice threads before installing.
   c) Install the new orifice(s) from the kit into the orifice mount. DO NOT OVER-TIGHTEN.
9. Convert the SIT gas valve:
   a) Remove Valve Cover.
   b) Use a T-20 driver to remove the two screws that hold the servo regulator to the gas valve.
   c) Remove the rubber regulator diaphragm that is situated between the servo regulator and the valve body and replace it with the one provided in the kit.
   d) Install the LP servo regulator, with the new longer T-20 screws included in the kit.
   e) Reinstall the Valve Cover plate.

10. Reinstall the burner, porcelain panels, glass tray, glass material, and glass door. Also refer to SECONDARY INSTALLATION - FIREBOX LINER & BURNER TRAY REMOVAL/INSTALLATION in your Owner's Manual. When re-installing the burner, ensure that the burner to pilot hood relationship is similar to what is shown in Figure 23.
11. Reconnect the main gas line if it was disconnected and open the shut-off valve at the gas line to the unit.
12. Use a small brush to apply a warm soapy water solution to all gas connections (use half dish soap and half warm water). If a gas leak is present, bubbling will occur. Gas leaks can be repaired by using an approved pipe thread sealant or approved Teflon tape. NEVER USE AN OPEN FLAME WHEN TESTING FOR LEAKS.
13. Reconnect the electrical power to the unit.
14. Refer to the Operating Instructions to light the unit and verify proper burner ignition and operation and proper flame appearance.
15. MAKE SURE that the conversion label is installed on or close to the rating label to signify that the unit has been converted to a different fuel type.

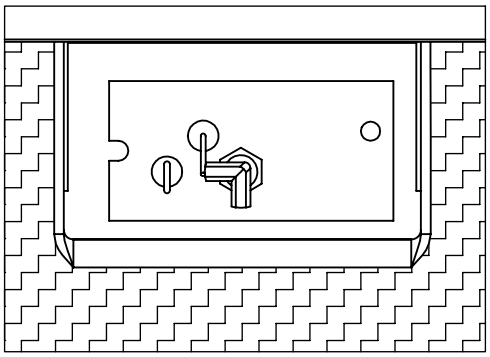

Figure 23. Ignitor assembly beside the burner (Shield Hidden).

Initial Installation

WARNING: Operation of this heater when not connected to a properly installed and maintained venting system can result in carbon monoxide (CO) poisoning and possible death.

Clearances to Combustibles:

Maintain sufficient clearances for operation, service and maintenance.

- A minimum distance of 24" (610 mm) is required from the centerline of the unit to the sidewalls.
- Minimum clearance for any combustible facing is 30" (762 mm) from the bottom of the unit.
- A 12" (305 mm) wide mantel can be mounted at a minimum height of 36" (914 mm) from the bottom of unit.
- If installed at floor level there must be a minimum of 16" (406 mm) of non-combustible material in front of the unit. Once unit is rasied 2" or more no floor protection is required.
- Unit can be installed with combustible material underneath and in front of unit, as long as it is raised 4" off the floor.
- Minimum ceiling clearance is 60" from bottom of unit.

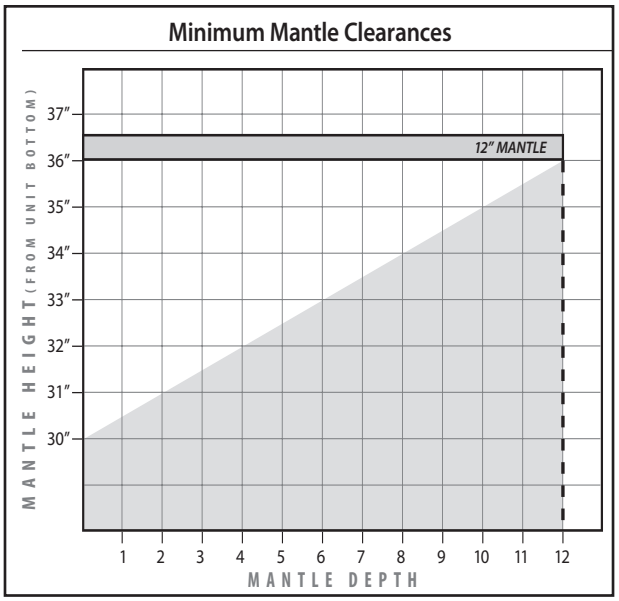

Figure 24: Mantle width and height.

Minimum Fireplace Size:

Table 4: Minimum dimensions of fireplace for E33GI to be installed into.

	Width At Front	Width At Back	Height	Depth
Fireplace Dimensions	32" (813 mm)	20" (508 mm)	20" (508 mm)	16" (406 mm)

NOTE: Space must be provided for gas line on right side of unit for servicing purposes.

Direct Vent:

WARNING: This appliance has been designed to draw room air for proper heat circulation from the sides and bottom of the unit, and out the top front. Blocking or modifying these openings in any way can create hazardous situations.

The vent length for the E33GI must be between 8ft (2.44 m) and 30ft (9.14 m).

This model is vented with a 3" intake and a 3" exhaust aluminum or stainless steel approved flex vent leading into a vertical termination cap. The flue collars of this model will fit inside of a standard 3" vent and must be fastened directly to the vent with three screws.. The exhaust vent and air intake are both located on the top of the unit.

Check periodically that the vents are unrestricted. Also ensure that all direct vent pipes have been properly sealed and installed after routine inspection or cleaning. The air intake and exhaust pipes must be installed in the correct locations on the top of the E33GI.

Initial Installation

QUALIFIED INSTALLERS ONLY

Venting Fireplace Inserts:

The **ENVIRO** E33GI may be installed and vented into any solid fuel fireplace that has been installed in accordance with the National, Provincial/State and local building codes and has been constructed of non-combustible materials. Before starting, refer to Initial Installation - Preparing Your E33GI For Installation. Please reference the information in Table 5 and Figures 25, and 27.

An approved chimney liner and rain cap must be used. A throat connector or flashing **must** be installed to ensure a tight seal, top performance, safety and efficiency. Carefully follow the manufacturer's instructions that accompany the chimney liner kit. Use double walled aluminum flex vent (3" flex conversion piece and 4"x 6 5/8" cap) from any of the following approved products; M&G Dura-Vent (Direct Vent Pro) or ICC (Excel Direct). If necessary, remove the vent collar plate from the top of the insert and connect it securely to the liner with sheet metal screws.

Check for any tears in the liner at this point. IMPORTANT: The screws that hold the vent collar plate in its approved position must be installed.

NOTE: If the E33GI unit is pulled out of its installation, and the vent air intake system is disconnected for any reason, ensure that the vent-air intake pipes are re-sealed with high-temperature sealant and reconnected with three (3) sheet metal screws evenly spaced.

Table 5: Vent termination clearances

Minimum Clearance*	Description
3 ft (0.9 m)	Clearance above the highest point where it passes through a roof surface, refer to Figure 23.
24 in (0.6 m)	Clearance above a roof ridge, any other portion of a building, or any other obstruction within a horizontal distance of 10 feet (3 m), refer to Figure 23.
5 ft (1.5 m)	Clearance for a vent or chimney above either the highest connected appliance drafthood outlet, or flue collar.
6 ft (1.83 m)	Clearance to mechanical air supply inlet.
3ft (0.9m)	Clearance to each side of center line extended above meter/regulator assembly.
6 ft (1.83 m)	Radial clearance around service regulator vent outlet.
12 in (30 cm)	Clearance above grade, verandah, porch, deck, or balcony.
3 ft (0.9 m)	Clearance to a building opening or combustion air inlet of another appliance, except with the approval of the authority having jurisdiction for the following reduced clearances.
9 in (0.23 m)	Exception for inputs up to and including 50,000 Btu/h (15kW)
12 in (0.3 m)	Exception for inputs exceeding 50,000 Btu/h (15kW) but not exceeding 100,000 Btu/h (30kW)

*Clearances are in accordance with local installation codes and the requiremenets of the gas supplier

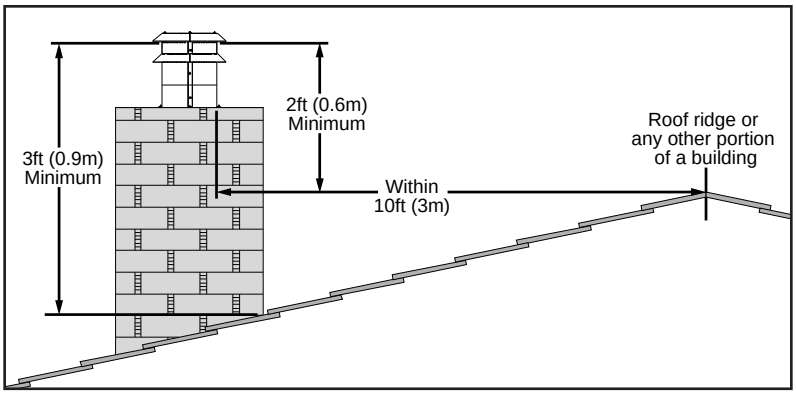

Figure 25: Roof Clearances.

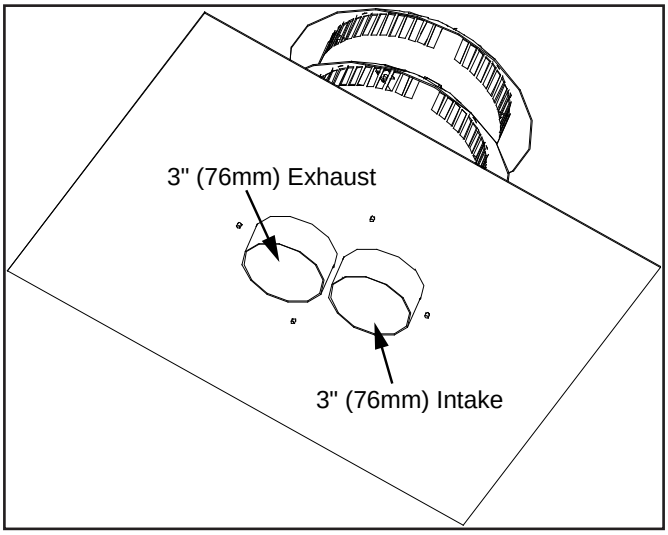

Figure 26: Generic Vent Cap Underside.

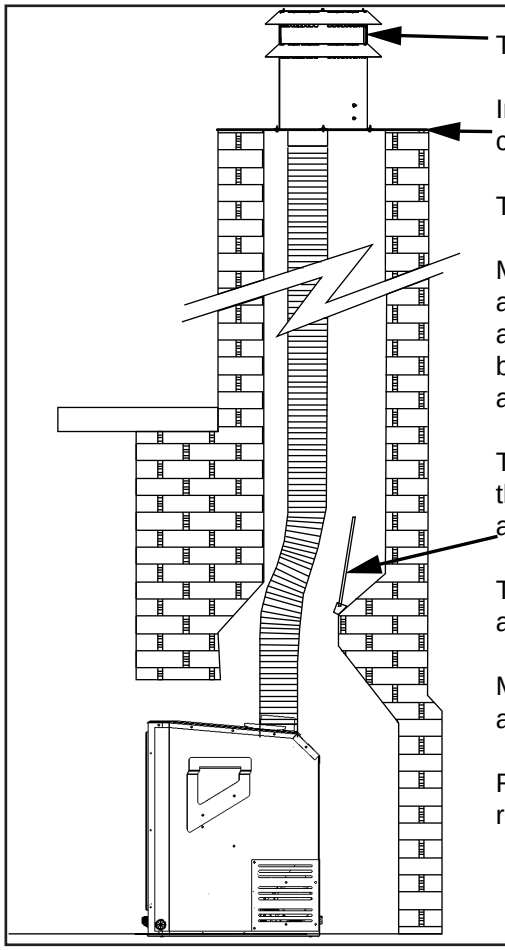

The height for the vent must be between 8 ft (2.44 m) and 30 ft (9.14 m).

Install a sealed vent cap to prevent leakage of room air up through chimney.

The intake and the exhaust are 3" (76mm).

Measure the height of the chimney beforehand and purchase the appropriate venting. Never attempt to over-stretch a flexible liner to accommodate the height of the chimney. Every joint in the venting must be secured with three (3) #8 x 3/8” HWH sheet metal screws and an appropriate sealant (either silicone or stove cement).

The flue damper can be fully blocked open or removed for installation of the E33GI; the smoke shelves, shields and baffles may be removed if attached by mechanical fasteners.

The fireplace and fireplace chimney must be clean, in good working order and constructed of non-combustible materials.

Make sure that all chimney cleanouts are tight fitting and will not permit air to leak into the chimney.

Refractory, glass doors, screen rails, screen mesh and log grates can be removed from the fireplace before installing the E33GI.

Figure 27: Installation of E33GI DV .

Initial Installation

QUALIFIED INSTALLERS ONLY

Direct Vent Vertical Vent Termination:

INSTALLATION INSTRUCTIONS:

1. Plan your installation and clearances to combustibles. The E33GI may be installed and vented into any solid fuel fireplace that has been installed in accordance with the National, Provincial/State and local building codes and has been constructed of non-combustible materials. Also refer to the Initial Installation - Preparing Your E33GI For Installation and Clearances to Combustibles sections. Refer to Figure 27 throughout installation.
2. Stretch the Ø3" (76mm) flex vent liners to the length needed to ensure they can be easily connected to the vent terminals.
3. Install the flex pipe assembly up through the chimney, ensure that the pipe slides through far enough to connect onto the vent cap.
4. Most vent caps can be installed onto chimneys with flue openings up to 16" (406mm) x 16" (406mm) and the actual flashing is 18"x18" (refer to Figure 28). If the chimney is smaller the cap should be trimmed down and folded over.
5. Apply a bead of stove cement sealant to the top section of the Ø3" (76mm) exhaust vent collar plate. Slide the Ø3" (76mm) flex vent over the flue collar and secure with three (3) sheet metal screws evenly spaced.
6. Place a bead of high temperature silicone on the intake collar of the fireplace, slide the Ø3" (76mm) flex intake liner over the collar, secure the flex liner with three (3) sheet metal screws evenly spaced.
7. At the top of the chimney, apply a bead of stove cement sealant to the Ø3" (76mm) pipe of the exhaust vent terminal (refer to Figure 26). Slide the flex liner onto the vent terminal and secure with three (3) sheet metal screws evenly spaced.
8. Place a bead of high temperature silicone on the intake collar of the vent terminal (refer to Figure 26). Slide the Ø3" (76mm) flex intake liner over the collar, secure the flex liner with three (3) sheet metal screws evenly spaced.
9. Make a tight connection between the gas fireplace insert flue collar and the fireplace chimney at the top of the chimney. Secure the vent terminal to the chimney using adequate sealant, and according to local building codes.

APPROVED TERMINATIONS:

-M&G Dura-Vent
46DVA-VCH cap with 46DVA-GK termination adapter
or 46DVA-CL33 termination kit

-ICC SVT cap with CTA termination adapter

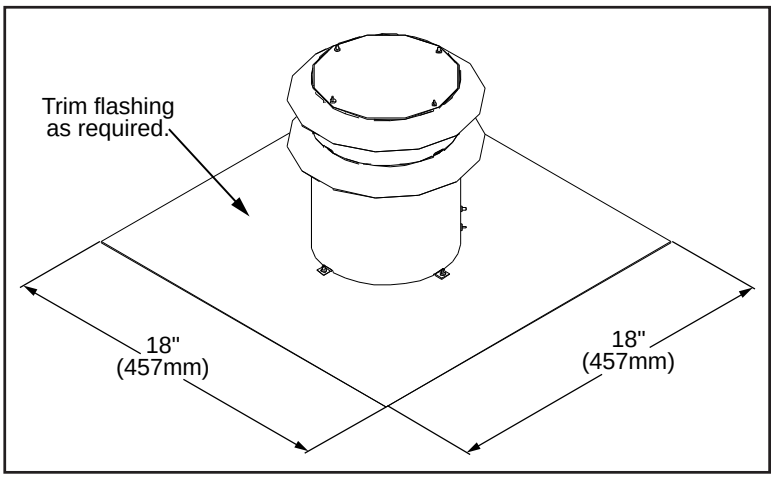

Figure 28: Generic Vent Cap Dimensions.

Initial Installation

QUALIFIED INSTALLERS ONLY

INSTALLING THE UNIT:

- Remove the packaging from the appliance and surround panels; check to make sure there is no damage. Carefully check the glass door. Do not use the unit if it is damaged. In the event damage is found, please report it to your dealer as soon as possible.

- Carefully clean the fireplace and flue before installing the stove. Failure to do so may result in fumes or soot being blown into the room and may cause a fire leading to death or serious injury.

1. Remove the unit from the box and remove all packaging material from the appliance.
2. Remove door. See MAINTENANCE AND SERVICE - GLASS DOOR REMOVAL.
3. Remove log and ember set and all wrapping material from the stove. Remove wrapping material from log and embers and check for any damage. If damage is observed, do not use unit and contact your local dealer.
4. Check that the chimney clean outs fit properly. The flue damper must be fully blocked open or removed for installation of the E33GI; the smoke shelves, shields and baffles may be removed if attached by mechanical fasteners.
5. If the fireplace opening is lower than 24" (610 mm), remove the vent collar plate from the top of the insert by unscrewing the single T-20 Torx screw located on the center top of the stove above the door opening (see Figure 29). Slide the collar plate backwards. Properly secure the vent collar plate to the flexible vent pipe liner(s) previously installed in the chimney. Be careful not to over-stretch the liner(s).
6. Place the unit part way into the fireplace. Connect the gas line to the ⅜" NPT pipe nipple at the lower left rear of the unit using locally approved methods (see INITIAL INSTALLATION - GAS LINE CONNECTION). Place the electric cable so it can be connected to the power supply.
7. As you push the unit into its final position in the fireplace, if the vent collar plate was removed, reinstall it to the stove by sliding it along the top of the unit and secure with the screw previously removed.
8. Adjust the levelling legs to ensure the unit is level and high enough if a base shelf and/or riser is to be installed. There are four levelling legs on the bottom of the unit (shown in Figure 30).

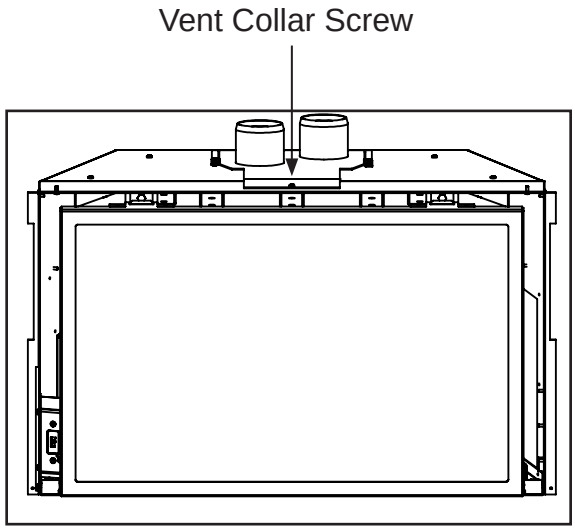

Figure 29: Vent Collar Plate Screw Location.

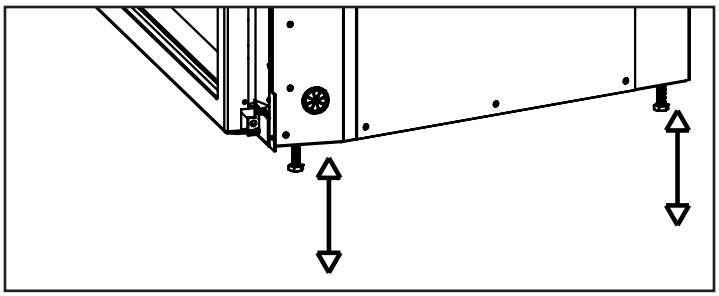

Figure 30: Levelling Legs Position.

Initial Installation

QUALIFIED INSTALLERS ONLY

Zero Clearance (ZC) Fireplace Installation:

The metal floor of the ZC solid fuel firebox can be removed to allow the installation of the insert. THE CLEARANCE TO COMBUSTIBLE MATERIAL UNDER THE INSERT IS 4" (102 mm). YOU MUST USE THE LEVELING LEGS TO RAISE THE INSERT A MINIMUM OF 4" (102 mm) IF THE UNIT IS TO BE INSTALLED ON COMBUSTIBLE MATERIAL. The optional Base Shelf and Riser are recommended to fill the space under the unit once raised. The sidewalls and top structure of the solid fuel firebox cannot be altered with the exception of: removal of dampers, removal of smoke shelf or baffle, removal of ember catches, removal of log grate, removal of viewing screen/curtain, and removal of doors. THE ORIGINAL FIREPLACE MAY NEVER BE RETURNED TO SOLID FUEL USE IN THIS CONDITION.

IMPORTANT: If the factory-built fireplace has no gas access hole(s) provided, an access hole of 1.5 inch (37.5 mm) or less may be drilled through the lower sides or bottom of the firebox in a proper workmanship like manner. This access hole must be plugged with non-combustible insulation after the gas supply line has been installed. Cutting any sheet-metal parts of the fireplace, in which the gas fireplace insert is to be installed, except as tested for the floor is prohibited.

The included label plate shown below must be permanently attached inside the cavity of the fireplace in a visible location.

WARNING: This fireplace has been converted for the use with a gas fireplace insert only and cannot be used for burning wood or solid fuels unless all original parts have been replaced, and the fireplace re-approved by the authority having jurisdiction.

C-11168

Figure 31: Fireplace Altered Plate.

Electrical Requirements:

The fireplace must be electrically connected and grounded in accordance with local codes or, in the absence of local codes, with the current CSA C22.1 Canadian Electrical Code Part 1, Safety Standards For Electrical Installations, or The National Electrical Code ANSI / NFPA 70 in the US.

WARNING: The electrical grounding instructions must be followed. The fan kit is equipped with a three-prong (grounding) plug for your protection against shock hazard, and should be plugged directly into a properly grounded three-prong outlet. DO NOT cut or remove the grounding prong from this plug.

CAUTION: When servicing controls, label all wires prior to disconnection. Wiring errors can cause improper and dangerous operation. Verify proper operation after servicing.
If any of the original wire as supplied with the appliance must be replaced, it must be replaced with 18 AWG wire with a temperature rating of 105°C

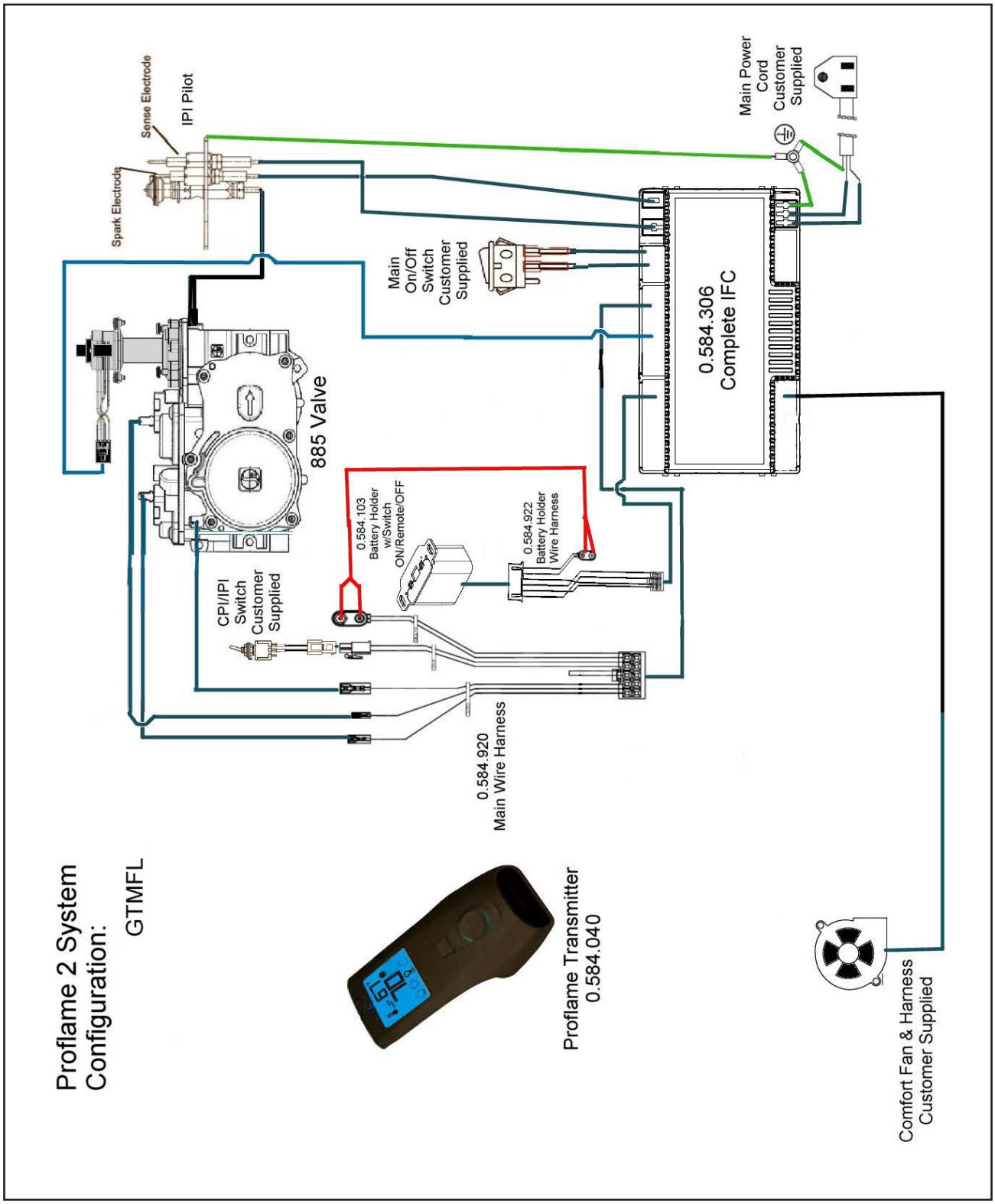

Figure 32: Wiring Schematic.

Initial Installation

QUALIFIED INSTALLERS ONLY

Gas Line Connection:

WARNING: Only persons licensed to work with gas piping may make the necessary gas connections to this appliance.

Gas Line Connection:

• A ⅜" 45° flared fitting and flex connector are supplied with the unit (see Figures 33 and 34). Consult the local authorities for local codes or use the CAN/CGA B149 (1 or 2) installation code in Canada. In the US, gas installations follow either local codes or the current edition of the National Fuel Gas Code ANSI Z223.1.

• If the factory-built fireplace has no gas access hole(s) provided, an access hole of 1.5 in (37.5mm) or less may be drilled through the lower sides or bottom of the firebox in a proper workmanship like manner. This access hole must be plugged with non-combustible insulation after the gas supply line has been installed.

• A shut-off valve is supplied with this unit.

• The appliance and its appliance main gas valve must be disconnected from the gas supply piping system during any pressure testing of that system at test pressures in excess ½ psi (3.5 kPa). The appliance must be isolated from the gas supply piping system by closing its equipment shutoff valve during any pressure testing of the gas supply piping system at test pressures equal to or less than ½ psi (3.5 kPa).

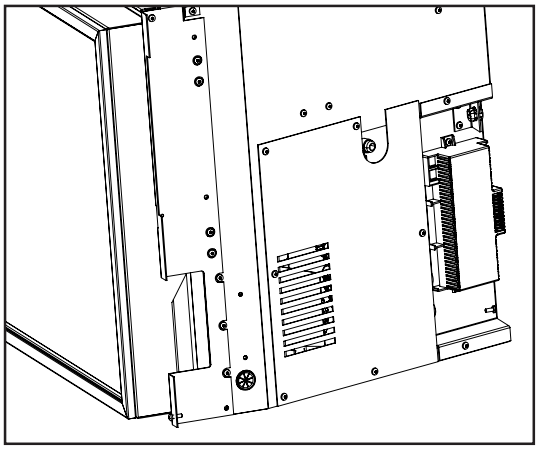

Figure 33: Gas Connection Location.

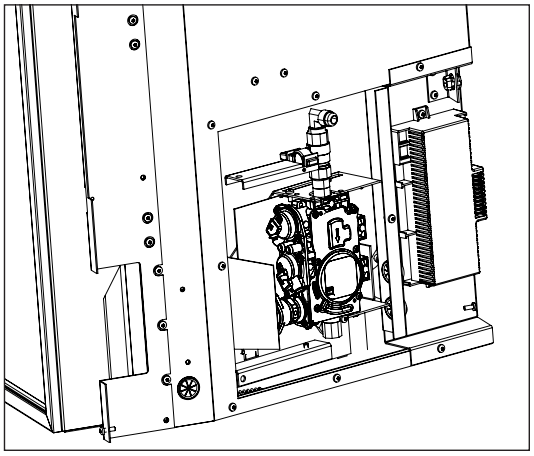

Figure 34: Gas Valve with Cover Removed.

Table 6: Orifice and Pressure Information.

E33GI With Log Set & Proflame Valve

Main Burner	Natural Gas	Propane Gas
Orifice:	#41 DMS	#54 DMS
Max. Manifold Press:	3.8 W.C. (0.95 KPa)	11.0 W.C. (2.74 KPa)
Min. Manifold Press:	1.2 W.C. (0.30 KPa)	3.7 W.C. (0.92 KPa)
Max. Supply Press:	10.5 W.C. (2.62 KPa)	13.0 W.C. (3.24 KPa)
Min. Supply Press:	3.5 W.C. (0.87 KPa)	8.0 W.C. (1.99 KPa)
Max. Input:	31,000 BTU/hr (9.09 KW)	28,000 BTU/hr (8.21 KW)
Min. Input:	17,000 BTU/hr (4.98 KW)	16,500 BTU/hr (4.84 KW)

QUALIFIED INSTALLERS ONLY

TO TEST VALVE PRESSURES (INPUT RATES):

The pressure taps are located on the front side of the valve (see Figure 35).

1. Using a long flat bladed screwdriver, turn set screw counter-clockwise to loosen.
2. Place $^{5}/_{16}$ in (8 mm) I.D. hose over the pressure taps.
3. Check pressures using a manometer.
4. When finished, remove hose and tighten set screw.

Always check for gas leaks with a soap and water solution after completing the required pressure test.

NEVER USE AN OPEN FLAME FOR LEAK TESTING.

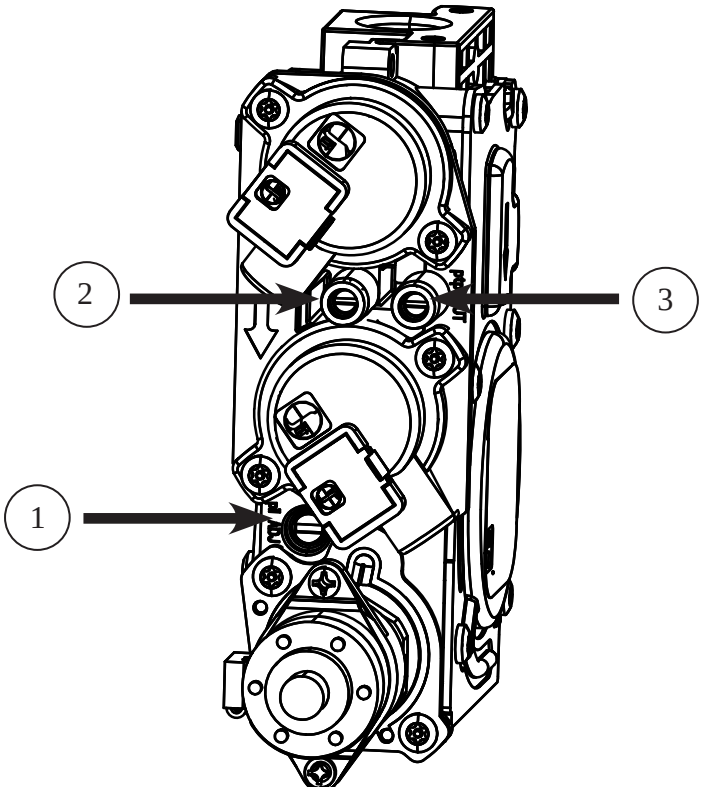

Figure 35: Valve Details.

Item Number	Description
1	Pilot Adjustment Screw
2	Inlet Pressure Test Point
3	Outlet Pressure Test Point

Table 7: Valve Details.

Adjusting The Pilot Flame:

The pilot flow adjustment is set to maximum at the factory and should not need to be adjusted. The pilot flame should envelope ⅜" to ½" (10 to 13mm) of the flame sensor (see Figure 36). However, should the need arise, follow Steps 1- 2 below.

1. The adjustment screw can be reached through the front of the unit using a 10 inch long blade head screw driver (see Figure 35 for location on valve).
2. Turn the adjustment screw clockwise to decrease or counterclockwise to increase pilot flame.

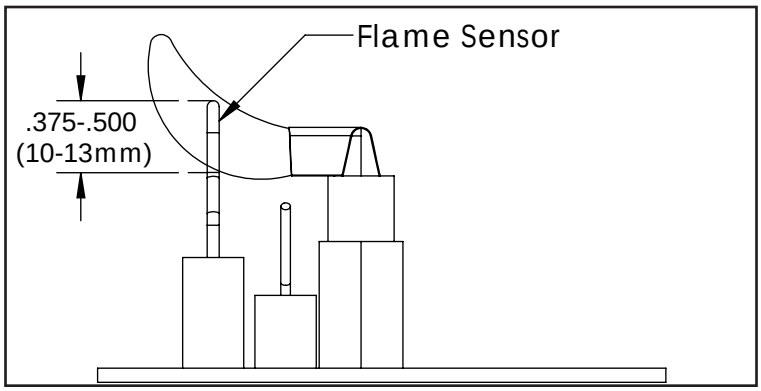

Figure 36: Proper Pilot Flame.

Secondary Installation

Optional Base Shelf & Riser:

The E33GI Base Shelf (1⅝" (41 mm) high) and Base Shelf Riser (2⅛" (54 mm) high) are components that can be combined to create a riser with an overall height of 2 3/16" (55 mm). This shelf can be installed with or without the riser and can be used when the hearth in front of the unit is lower than the fireplace opening. Additional Base Shelf Risers can be fastened together to increase the height in increments of 2⅛" (54 mm). This Base Shelf may be used in conjunction with the any of the E33GI surround panel options, and it may also be used with the E33GI Trimmable Surround. The Base Shelf and Riser are sold separately.

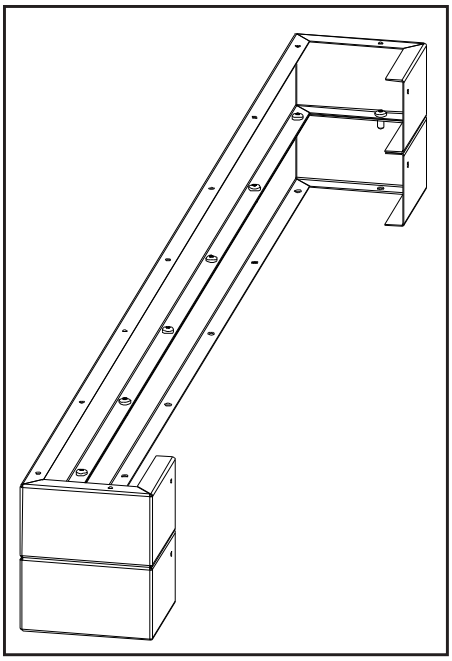

Figure 37: Combining 2 Base Shelf Riser.

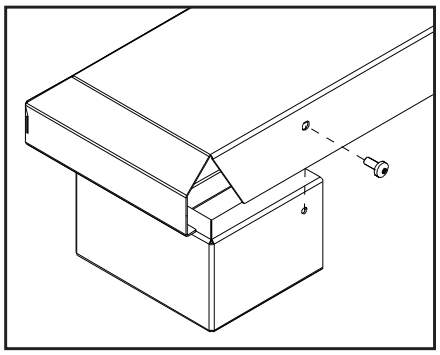

Figure 38: Installing Base Shelf onto Riser.

Installation:

1. If unit is running, turn it off and allow it to cool completely.
2. When using more than one riser each level must be attached using nine (9) #8 T-20 screws provided (see Figure 37).
3. If installing with riser(s) the Base Shelf is to be fastened to the riser(s) with one T-20 screw at each end of the back (see Figure 38).
4. The leveling legs on the E33GI may need to be adjusted to match the height of the riser and shelf.
5. Center the Base Shelf assembly in front of the unit flush with the bottom of the unit.
6. Install surround if required.

Secondary Installation

Surround Panel Screw Installation:

Trimmable Panel Install:

The trimmable panel is installed by sliding slots in the panel into screws on the stove. Two screws must be installed at the bottom of the Side Extensions.

INSTALLATION:

1. Using a T20 screwdriver, screw one (1) #8-32 x .5" screws approximately 1/4" into the bottom of each Side Extension (see Figure 40).

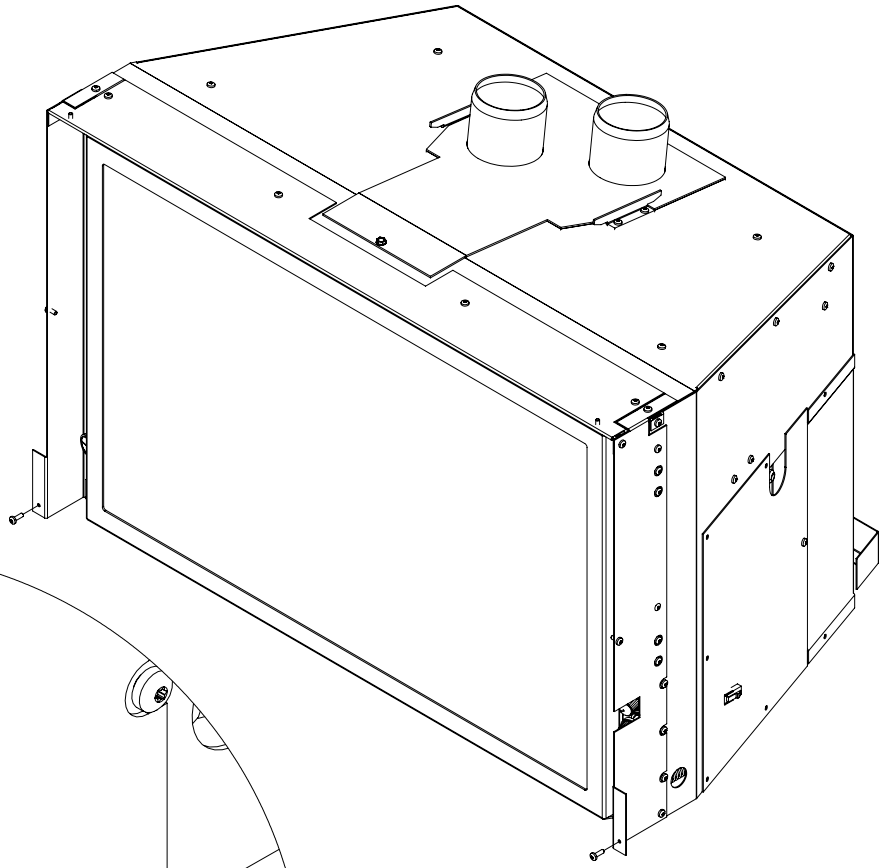

Figure 39: Trimmable Panel Screw Install.

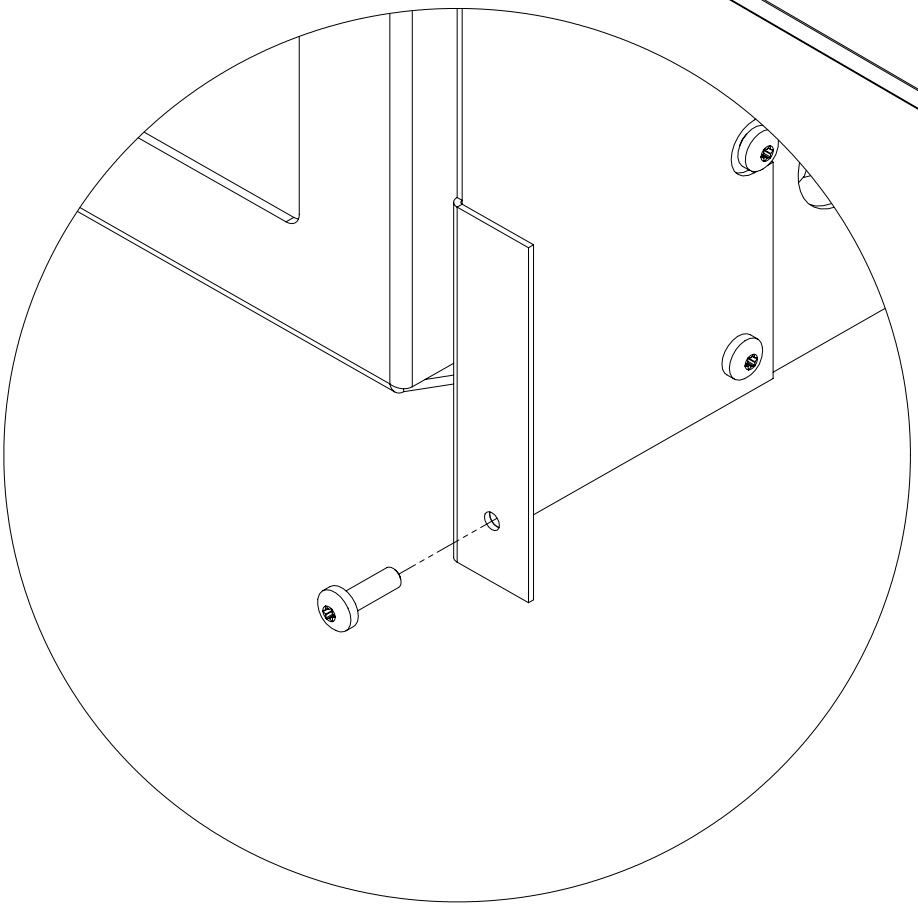

Figure 40: Trimmable Panel Screw Install Close-up.

Secondary Installation

Optional 3 Trimmable Panels:

Modifying the Surround Panel:

The E33 Trimmable Surround Panels are large rectangular panels that may be cut for use in cases that a non-standard fireplace opening (e.g. an arched opening) is to be filled. Optionally this surround can be left uncut and placed in front of the fireplace opening.

1. Measure the fireplace opening and/or make a template of the fireplace opening.

2. Transfer the measurement to the Trimmable Surround.

3. If desired, offset the measurements by approximately 1/8" (3mm) to the inside; this will allow for the panel to be placed just inside the fireplace opening for a cleaner appearance.

4. Cut along the preferred line (from direct measurements of offset) and remove any sharp edges.

5. The panel can be touched up with a high temperature metallic black paint available from your dealer.

INSTALLATION:

1. Using the supplied hardware install a Trimmable Panel Bracket, on its short leg, onto each side of the stove using a T-20 Torx screwdriver. See Figure 31 for the screw location and bracket orientation.

2. Install the Trimmable Panel, **WITH THE FLANGES FACING OUT**, onto the Side Extensions and in front of the Panel Brackets by hooking the Panel's top flange onto the alignment pins on top of the Top Extension (See Figure 41).

3. Using the remaining hardware attach the Trimmable Panel to the Panel Brackets using a T-20 Torx screwdriver (See Figure 42).

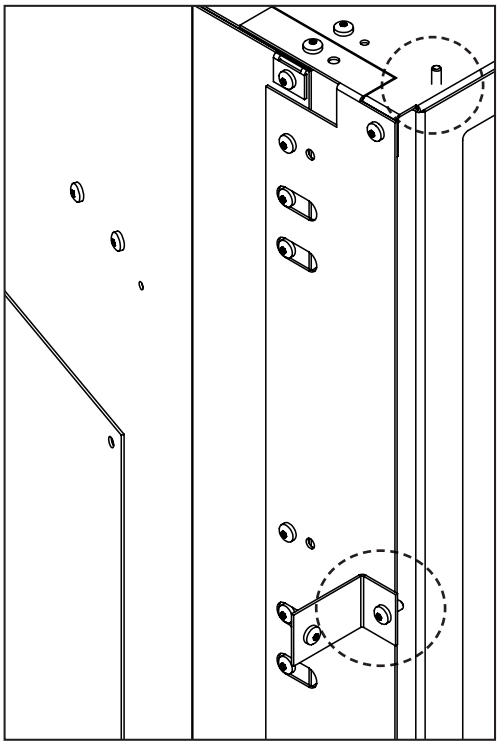

Figure 41: Panel Bracket Installed and Pin Location

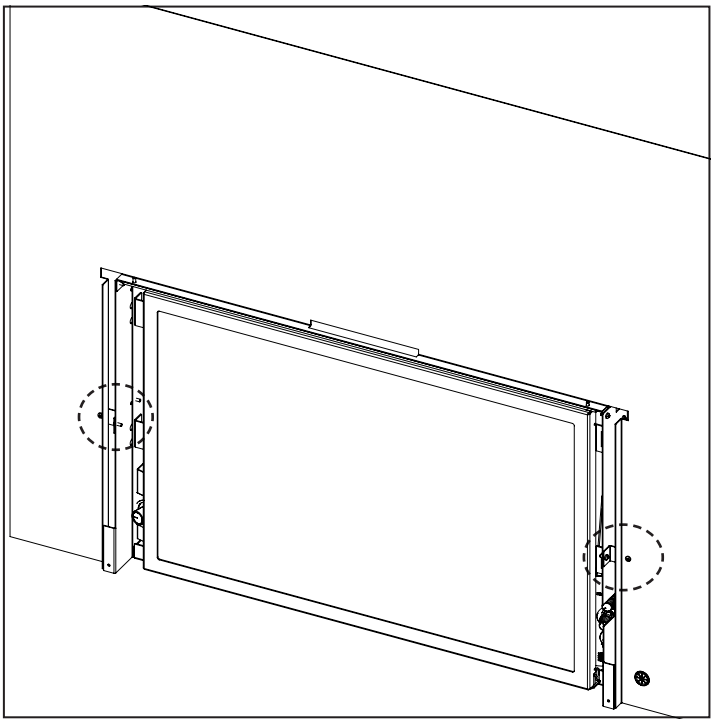

Figure 42: Trimmable Panel Installed

Secondary Installation

Surround Panel Installation:

WARNING: The surround becomes hot when the unit is operating; ensure that the unit is turned off, and that it has cooled to room temperature before beginning this installation.

	Height	Width
3-Sided Surround	26 1/2" (673 mm)	44 1/8" (1121 mm)

Table 8: Surround Dimensions.

Please check components supplied with this kit. If components are missing or have been damaged, contact your dealer, distributor or courier company before starting this installation.

IMPORTANT: The panel must not seal ventilation openings in the fireplace.

INSTALLATION:

If Installing a Contemporary or Extruded surround panel lift the access door up until it locks in place. Lift the panel upright in front of the fireplace with the top mounting flange pointing towards the fireplace. Slide the panel over the corresponding screws on top of the Top Extension and at the bottom of the Side Extension on each side (see Figure 43). Ensure the panel is secure before releasing it. The bottom screws can be tightened on the Contemporary and Extruded surrounds for a more permanent install.

REMOVAL:

Lift the surround straight up in order to unhook it from the screws. Pull the surround away from the fireplace.

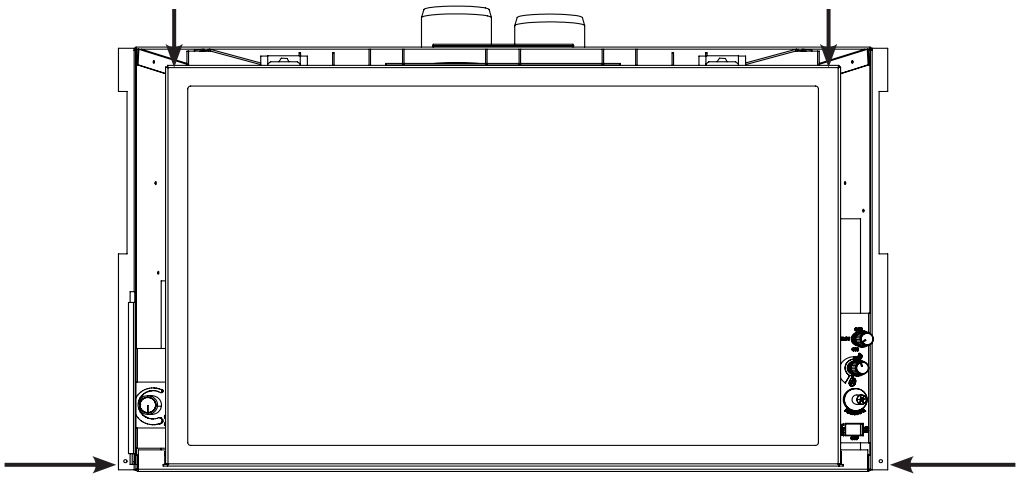

Figure 43: Screw Locations.

BURNER SWITCH WIRING INSTALLATION:

The burner switch supplied with the surround comes pre-installed and wired. The wiring from the burner switch simply needs to be connected to the wiring on the E33 unit.

The wiring harness for the burner switch has one (1) blue wire, one (1) grey wire and two (2) purple wires.

The blue wire connects to the blue wire on the E33 unit, the grey wire connects to the grey wire on the E33 unit, and the purple wires are used to connect an optional thermostat.

CLEANING:

Painted surfaces should be periodically wiped with a damp cloth. **Never clean the face when it is hot.**

Secondary Installation

Safety Screen Installation:

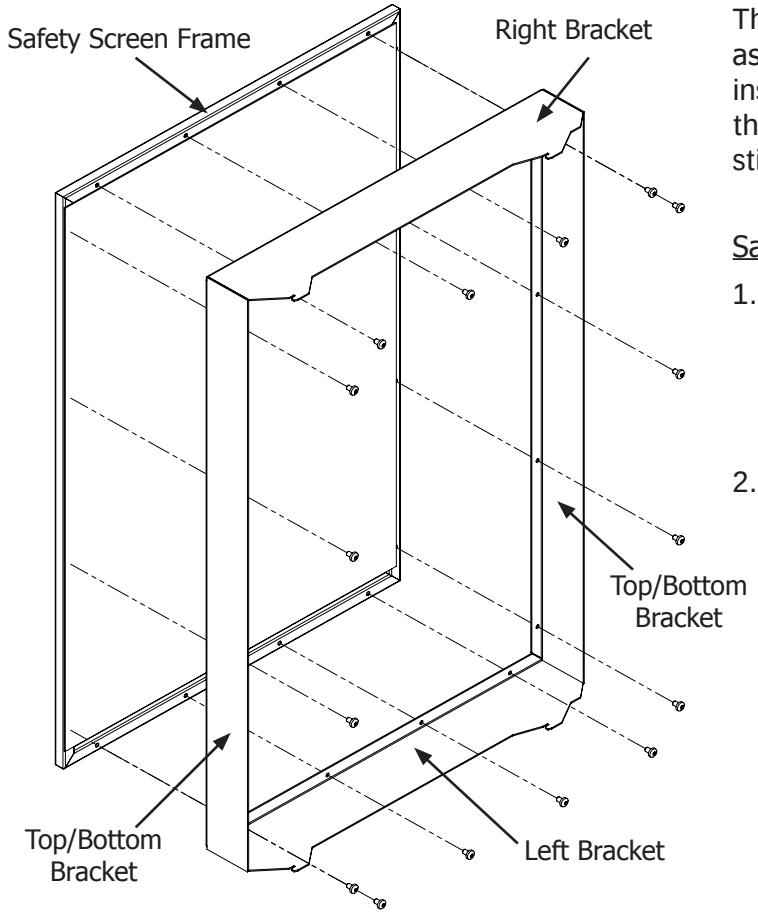

Figure 44: Installing Safety Screen Mounts.

The safety screen supplied with the unit must be assembled first before it can be installed. When installed, the screen should not extrude out any farther than the surround panel if the cabinet extensions are still installed.

Safety Screen Assembly

1. Attach the left, right, top/bottom brackets onto the safety screen using a T20 screwdriver and the supplied sixteen (16) #8 T20 screws (see Figure 42). Do not over-tighten the screws, doing so could cause them to strip out of the screen frame.
2. Lift the face upright in front of the fireplace with the four (4) hooks pointing towards the fireplace. Slide the hooks into the corresponding brackets on each side of the cabinet (see Figure 46). Ensure the hooks are secure before releasing the safety screen.

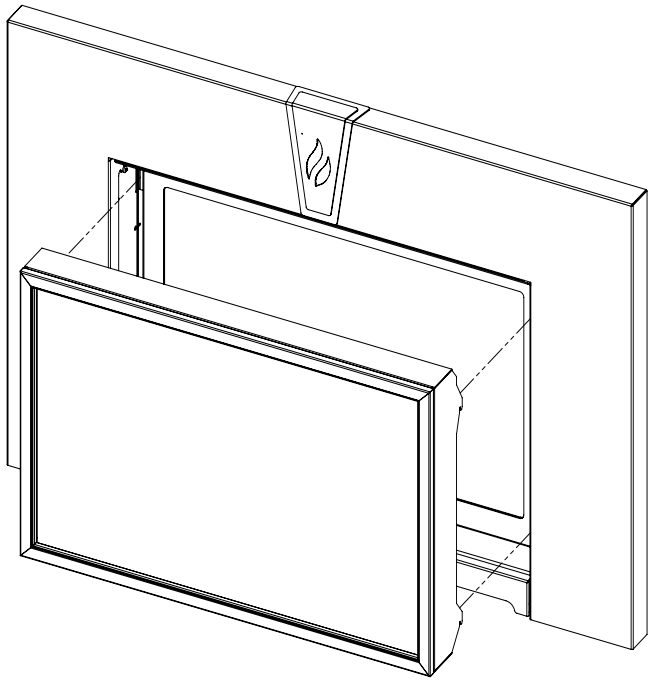

Figure 45: Installing Safety Screen onto Brackets.

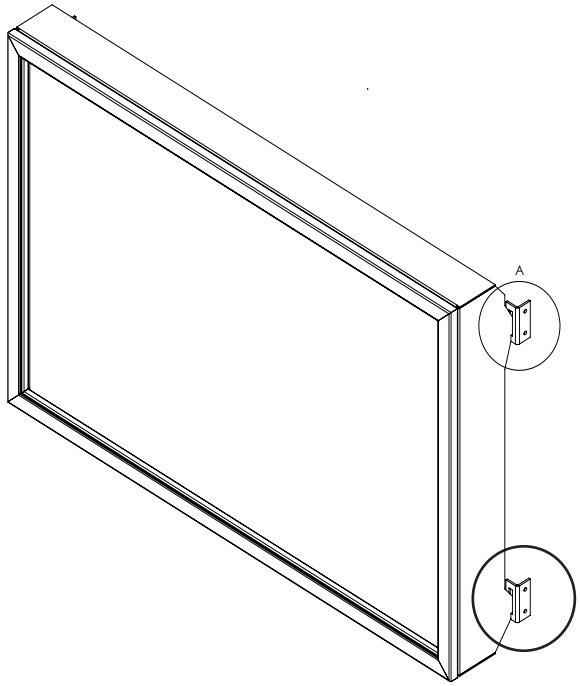

Figure 46: Installing Safety Screen onto Cabinet Bracket (Parts removed for clarity)

Secondary Installation

Firebox Liner and Burner Tray Removal/Installation:

NOTE: The porcelain on the firebox liners can be cracked and chipped easily and should be handled gently.

WARNING: Failure to position the parts in accordance with these diagrams or failure to use only parts specifically approved with this appliance may result in property damage, personal injury, or death.

1. **Ensure the E33GI is turned off and allow the unit to cool.**
2. Remove the glass door as shown in the Maintenance and Service - Glass Door Removal.

WARNING: Do not touch or attempt to remove the door if the fireplace is not completely cool. **Never operate the fireplace with the door removed.**

3. Remove the glass material (if installed).
4. Use the following steps to remove the liners and the burner tray.

NOTE: Follow the steps in the reverse order for reassembly.

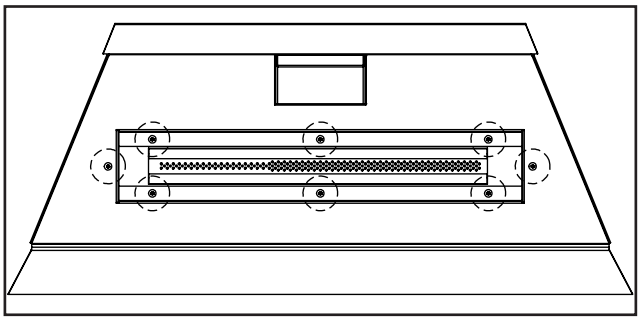

Figure 47: Remove the eight T20 screws and then remove the glass tray panel by lifting up.

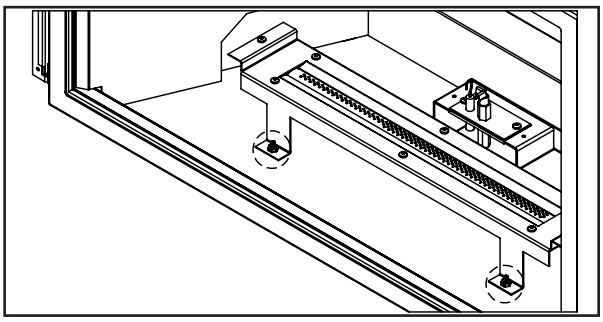

Figure 48: Remove the two nuts which hold down the burner. Gently pull the burner forward to remove it from the Venturi Box.

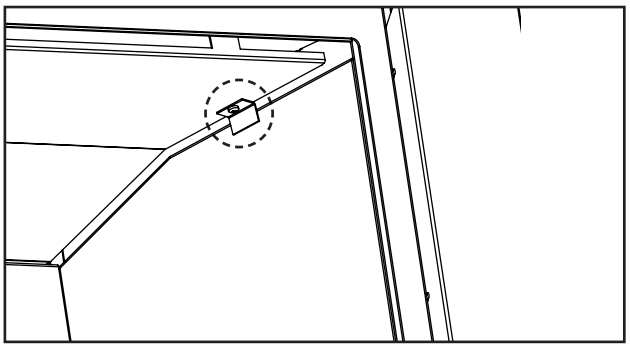

Figure 49: Remove the side panel retainer clips which secure the side.i

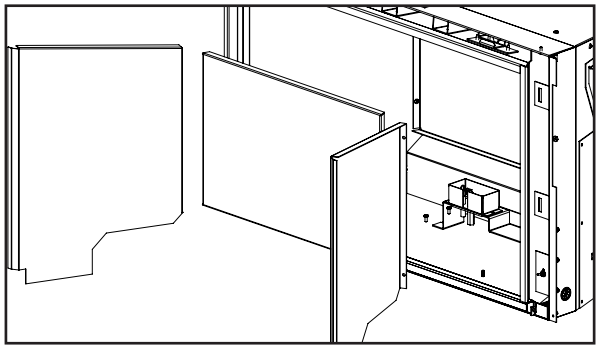

Figure 50: Remove the side panels then the back panel.

Secondary Installation

Installing the Glass Burner Media:

Pour the supplied glass media into the tray and evenly distribute over the entire tray area as shown in Figure 51. There is 3.5lbs of glass included which is just enough for a 0.250" - 0.375" thin layer to cover the area shown. Ensure that the pilot flame slot remains clear of any glass.

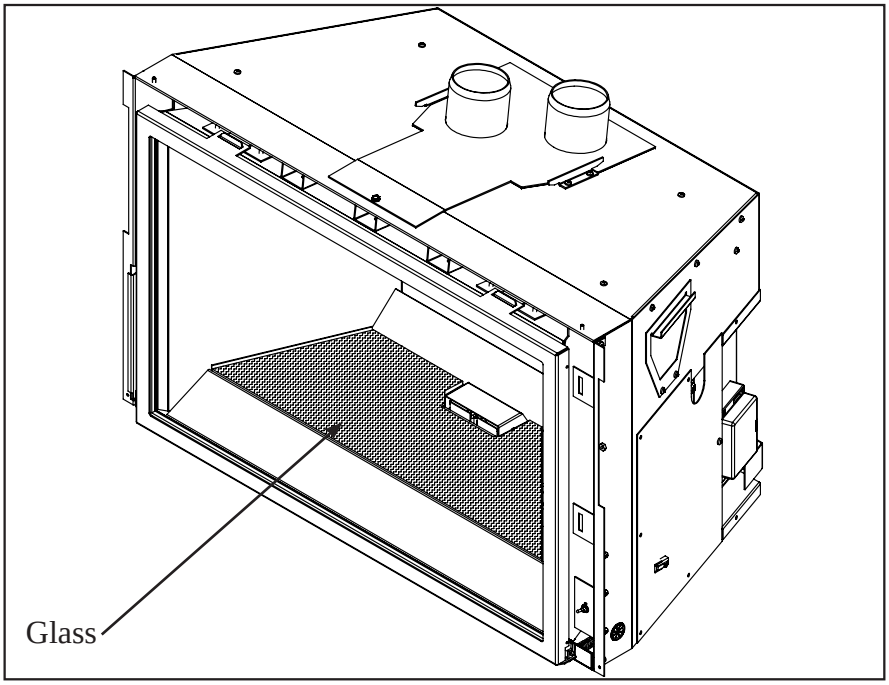

Figure 51: Glass tray burner with glass installed.

If the Rock burner option is being installed use the supplied glass media and only fill the burner area as shown in Figure 52. Fill the burner area until the glass is flush with the bunrner tray, much less glass is used with this set-up. See instruction sheet with Rocks for further set-up info. **ONLY USE SUPPLIED GLASS MEDIA.**

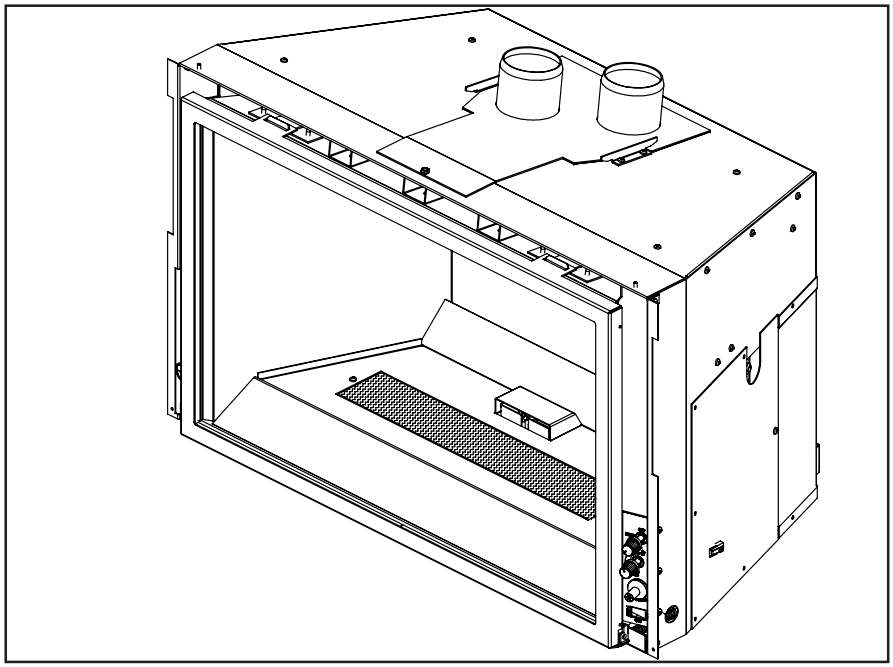

Figure 52: Glass tray burner with glass for Rock Burner.

Diagnostic Flash Codes:

1. Fail to ignite: If there is no positive ignition, the board will go into lock out and the LED will blink 3 times in intervals until the system is reset.

2. Low battery condition (<4V): the LED indicator will blink one (1) time in intervals.

3. Parasitic Pilot Flame: the LED indicator will blink two (2) times in intervals.

4. System Lock out: the LED indicator will blink three (3) times in intervals.

Additional Ignition Information

1. The Proflame2 IFC will try two (2) times for ignition.

2. Each try for ignition will last approximately 60 seconds.

3. The wait time between the two tries is approximately 35 seconds.

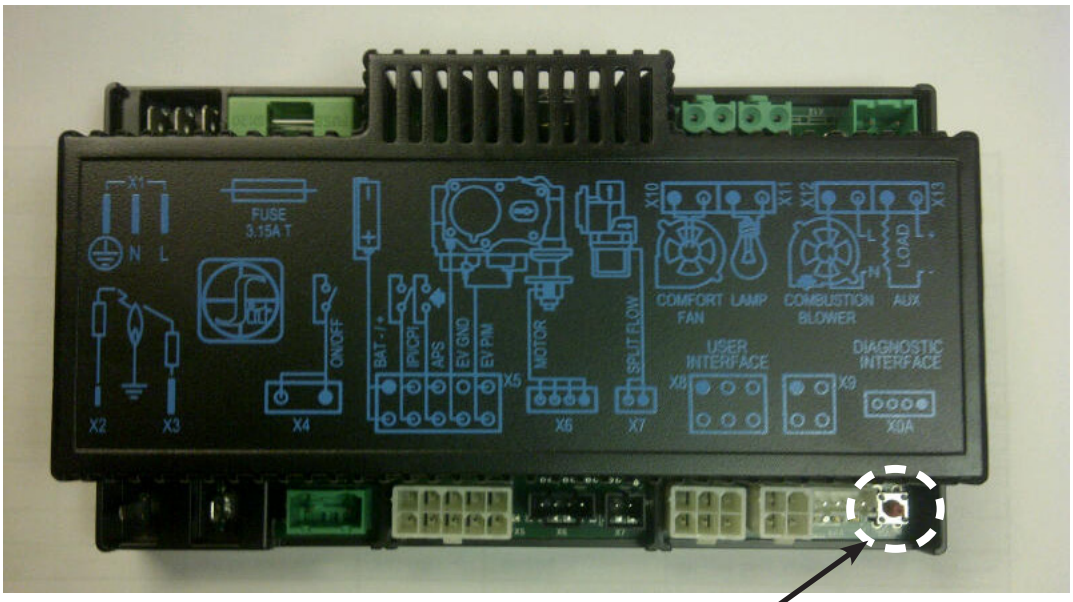

LED Location

Figure 53: IFC LED Location

TroubleShooting

Problem	Possible Cause	Solution
Thermostat does not work	The pilot flame has gone out	· Turn it ON
	The On/Off switch is turn to OFF	
	The thermostat is set too high	· Set the thermostat to a lower temperature
No spark generation	Spark developes near the pilot assembly or could occur onboard	· Check pilot assembly wiring
		· Check for broken or poor connection from the sparker to the electrode
		· Check for the spark shorting or arcing at other locations
		· Check for defective sparker and spark electrode
No pilot flame ignition	No spark from the igniter	· See "no spark generation"
	Air in the gas line	· It takes a while for all the air to purge out of the pilot before gas can reach the pilot and ignite
	Pilot gas pressure dropout upon main burner gas valve opening	· Check gas mains supply and pressure
	No gas flow out of the pilot burner	· Check gas valve wirings and connections to the board
		· Check the pilot burner for obstruction
		· Check the wirings and connections between the pilot assembly and the board
		· Check the correct gas type settings on the valve and pilot burner assembly orifice
Pilot will not remain lit	Problem with Flame Sensor circuit	· Check for proper connection of the Flame Sensor to the IFC board
		· Check pilot for full flame impingement around Flame Sensor
		· If flame is too small, check gas pressure, adjust pilot rate screw, check pilot head for damage
		· Ensure the ground wire is properly attached to the pilot mounting bracket and that it is makes a good electrical connection.
	Restrictor setting	· Use the correct restrictor setting for the venting configuration
Remote control does not work	The pilot light has gone out	· See "Pilot will not remain lit"
	The remote is too far away from the heater	· Use the remote closer to the heater
	The remote control receiver is turned "OFF"	· Check the remote control instructions
	One of the two remote control or receiver batteries are dead	· Replace the batteries
No reaction to command	Receiver or transmitter batteries are low	· Replace the batteries
	A maximum number of failed ignitions or flame restorations have been reached.	· Remove any possible blocking conditions. See "locking conditions"
		· See how to reset the board from Lockout
	No communication between the remote control and the receiver	· Reprogram the transmitter to the receiver.
		· Follow the initializing system for the first time

TroubleShooting

Problem	Possible Cause	Solution
Locking conditions	Reset the Proflame IFC board	· Turn the system off by pressing the ON/OFF button on the transmitter
		· After approximately 2 seconds press the ON/OFF button on the transmitter again.
		· In the manual flame control mode, use the down arrow button to reduce the flame to off, indicated by the word OFF displayed on the transmitter LCD screen.
		· Wait approximately 2 seconds and press the up arrow button, the ignition sequence will start.
		· With the transmitter off, move the slider switch on the receiver to the OFF position.
		· Wait approximately 2 seconds and move the receiver slider switch to the ON position.
Main burners will not start	The pilot flame has gone out	· See "Pilot will not remain lit"
	The remote control is not working correctly	· Replace the batteries
	The thermostat is disconnected or set too high	· Set the thermostat to a lower temperature
	Problem with thermopile circuit	· Check gas line pressure
		· Check wiring to thermostat for breaks
		· Check for flame impingement on thermopile
Flame lifting	Leak in vent pipe	· Check for leaks in vent connections
	Improper vent configuration	· Check vent configuration with manual
	Terminal may be re-circulating flue gases	· Check to see if terminal is on correctly
		· May need to install high wind termination cap.
		· Contact dealer
Blue Flames	The heater has just been started	· Normal during start up: flame will yellow as the fireplace heats up
	Improper air shutter adjustment	· Adjust air shutter – contact your dealer
Glass fogs up	Normal condition: after the appliance warms up the glass will be clear.	**Due to additives in gas, glass may get hazy during operation** Clean as needed.
Flames are burning "dirty" or sooting	The logs or glasses are placed incorrectly	· Check log positioning
		· Check level of glasses layout
	Improper air shutter adjustment	· Increase primary air by opening the air shutter and/or by opening the vent restrictor
		· Check for proper venting and blockage of the vent termination
		· See also "Burners will not remain lit"
	Incorrect rating input	· Check manifold pressure and clock input rating for over-firing

Parts List

Reference Number	Part Description	Part Number
1	DV Flue Adaptor Bottom Gasket	50-2516
2	Door Release Tool	50-2510
3	Door Latch Mechanism (Set of 2)	50-2524
4	885 Proflame IPI Valve NG	50-2682
5	Proflame 2 IFC - 5 Second Delay (0.584.326)	50-3202
6	Pilot Shield	50-2550
7	PSE IPI Pilot Assembly	50-3026
8	E33 Glass Burner Tube Assembly	50-3032
9	Fan Only	50-2493
10	Glass Enameled Tray	50-3031
11	Proflame 2 Battery Holder (0.584.103)	50-3204
12	E33 30 deg. Angled Flue Collar	50-2630
13	Dual Bulb Door Gasket (10ft)	50-634
14	Glass C/W Gasket (21.75” x 13.575”)	50-2523
15	Door Complete	50-2522
16	Safety Screen	50-3073
17	Pilot Gasket	EC-021
-	Porcelain Liner Set	50-2437
-	E33GI Owner’s Manual	50-2578
-	E33GI Conversion Kit NG to LP	50-2489
-	E33GI Conversion Kit LP to NG	50-2539
-	Blank Filler Switch	EG30-010
-	12 oz. Can of Metallic Black Touch Up Paint	PAINT-12-MB
-	Remote Transmitter	50-2411
-	Proflame 2 IFC Wire Harness (0.584.922)	50-3203

Parts List

Reference Number	Option Description	Part Number
25	Borderview Surround Panel Powder Coated Grey -E33I	50-3174
-	Borderview Surround Panel Plated Nickel -E33I	50-3175
-	Borderview Surround Panel Plated Copper -E33I	50-3176
26	Borderview Plus Surround Panel Powder Coated Grey - E33I	50-3177
-	Borderview Plus Surround Panel Plated Nickel -E33I	50-3178
-	Borderview Plus Surround Panel Plated Copper -E33I	50-3179
27	Modern Surround Panel - E33I	50-3155
28	Modern Plus Surround Panel Powder Coated Grey - E33I	50-3173
29	Extruded Surround Panel - E33I	50-2430
30	Oversized Extruded Surround Panel - E33I	50-2557
31	Extruded Plus Surround Panel Powder Coated Black - E33I	50-3180
32	Contemporary Surround Panel - E33I	50-2429
33	Oversized Contemporary Surround Panel - E33I	50-2556
34	Slim Surround - E33I	50-3228
35	Trimmable Surround Panel - E33I	50-2432
36	Base Shelf - E33I	50-2434
37	Base Shelf Riser - E33I	50-2435
38	Hearth Riser - E33I	50-3197
-	Porcelain Liner Set - E33I	50-2437

Parts Diagram - Components

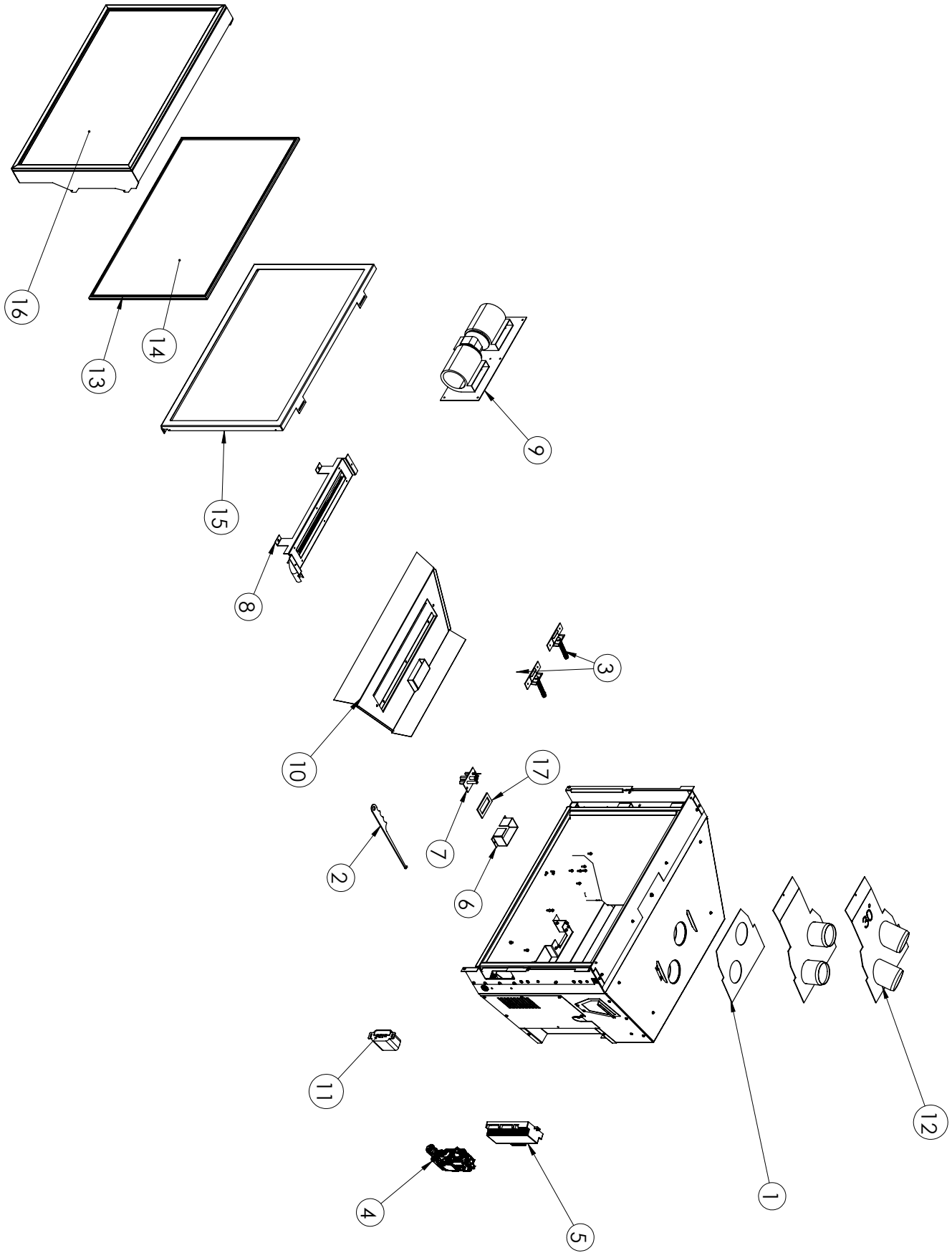

Parts Diagram - Options

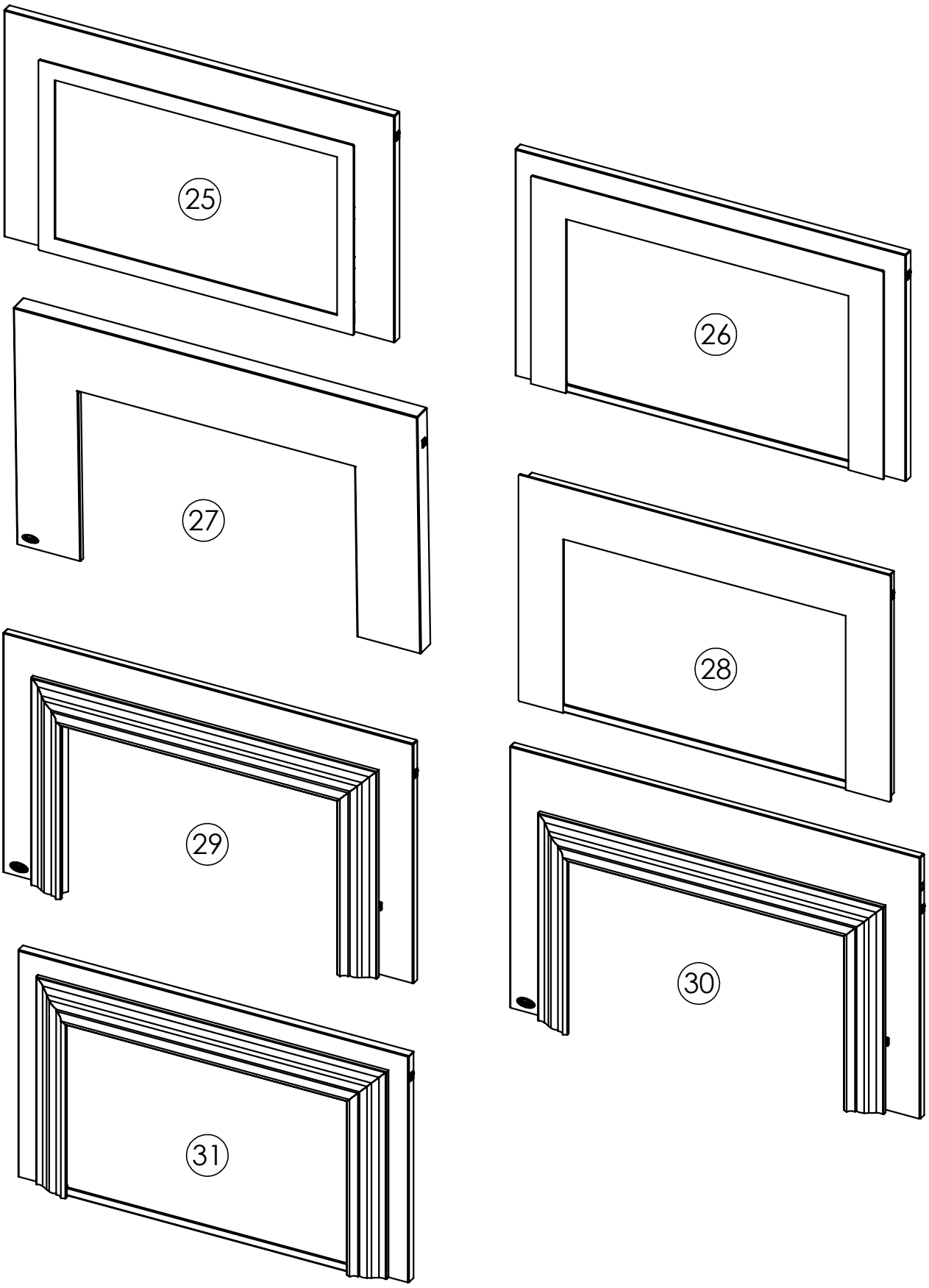

Parts Diagram - Options

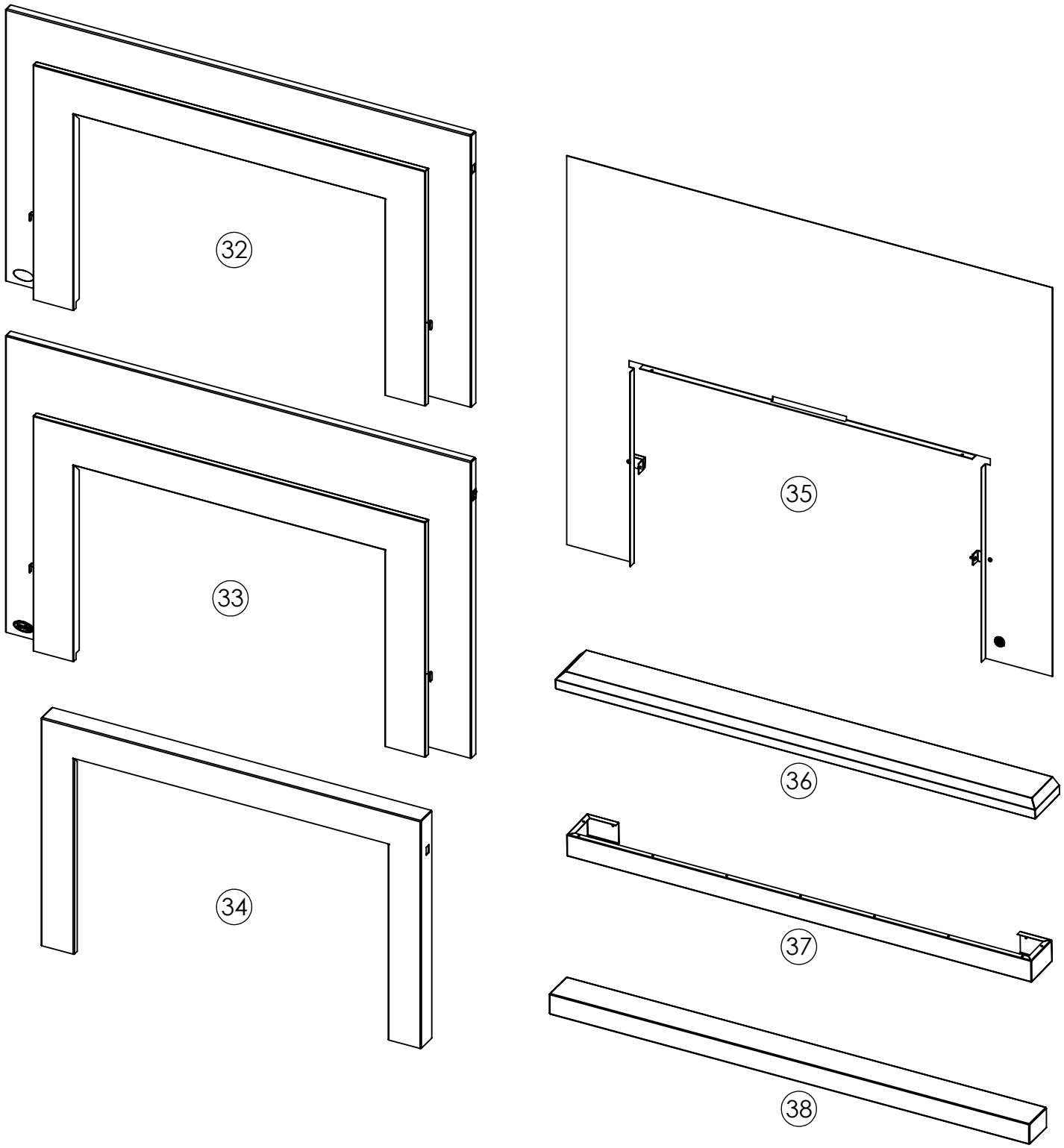

Notes

Warranty for Enviro **Gas** Products

Sherwood Industries Ltd. ("Sherwood") hereby warrants, subject to the terms and conditions herein set forth, this product against defects in material and workmanship during the specified warranty period starting from the date of original purchase at retail. In the event of a defect of material or workmanship during the specified warranty period, Sherwood reserves the right to make repairs or to assess the replacement of a defective product at Sherwood's factory. The shipping costs are to be paid by the consumer. All warranties by Sherwood are set forth herein and no claim shall be made against Sherwood on any oral warranty or representation.

Conditions

- A completed warranty registration must be submitted to Sherwood within 90 days of original purchase via the online warranty registration page or via the mail-in warranty registration card provided. Have the installer fill in the installation data sheet in the back of the manual for warranty and future reference.
- This warranty applies only to the original owner in the original location from date of install.
- The unit must have been properly installed by a qualified technician or installer, and must meet all local and national building code requirements.
- The warranty does not cover removal and re-installation costs.
- Sherwood Industries Ltd. reserves the right to make changes without notice.
- Sherwood Industries Ltd. and its employees or representatives will not assume any damages, either directly or indirectly caused by improper usage, operation, installation, servicing or maintenance of this appliance.
- A proof of original purchase must be provided by you or the dealer including serial number.
- This warranty does not cover any discoloration of the safety screen mesh.

Exclusions

An expanded list of exclusions is available at www.enviro.com/help/warranty.html

This warranty does not cover:

- Damage as a result of improper usage or abuse.
- Damage caused from over-firing due to incorrect setup or tampering.
- Damage caused by incorrect installation.

To the Dealer

- Provide name, address and telephone number of purchaser and date of purchase.
- Provide date of purchase. Name of installer and dealer. Serial number of the appliance. Nature of complaint, defects or malfunction, description and part # of any parts replaced.
- Pictures or return of damaged or defective product may be required.

To the Distributor

- Sign and verify that work and information are correct.

Sherwood Industries Ltd.
6782 Oldfield Road, Victoria, BC . Canada V8M 2A3
Online warranty registration: www.enviro.com/warranty/

Category	One Year	Two Year	Limited Lifetime (7yr)
Parts [1,2] (unit serial number required)		✔	
Firebox Liner Panels [3]		✔	
Firebox			✔
Heat Exchanger			✔
Burner			✔
Ceramic Logs [4]			✔
Ceramic Glass [5]	✔		
Pedestal / Legs (excluding finish)			✔
Door Assembly			✔
Surround Panels (excluding finish)			✔
Exterior Panels (excluding finish)			Up to 5 years
Electrical Components		✔	
Exterior Surface Finishing	✔		
Labour	✔		

[1] Whereas warranty has expired, replacement parts will be warrantied for 90 days from part purchase date. Labour not included. Unit serial number required.

[2] 50-173 Westport Fan Kit covered for up to 5 years from purchase date. Labour not included. Unit serial required.

[3] Excluding damage to the finish caused by improper setup of the appliance, or color changes.

[4] Log set and panels excludes wear and tear or breakage caused by cleaning or service.

[4] Glass is covered for thermal breakage. Photos of box, inside of door, and unit serial # must be supplied for breakage due to shipping.

[6] Exterior Surface finishing covers plating, enamel or paint and excludes colour changes, chipping, and fingerprints.

Travel costs not included.

Jan 2018

47

Installation Data Sheet

The following information must be recorded by the installer for warranty purposes and future reference.

NAME OF OWNER:

_____

ADDRESS:

_____

_____

_____

PHONE:_____

NAME OF DEALER:

_____

ADDRESS:

_____

_____

_____

PHONE:_____

MODEL:_____

SERIAL NUMBER:_____

DATE OF PURCHASE: _____ (dd/mm/yyyy)

DATE OF INSTALLATION:_____(dd/mm/yyyy)

☐ DIRECT VENT ☐ B-VENT

☐ NATURAL GAS (NAT) ☐ PROPANE(LPG)

INLET GAS PRESSURE:_____in WC

MAIN BURNER ORIFICE:_____# DMS

PILOT ORIFICE #_____OR_____in diam.

INSTALLER'S SIGNATURE:

_____

NAME OF INSTALLER:

_____

ADDRESS:

_____

_____

_____

PHONE:_____

MANUFACTURED BY:
SHERWOOD INDUSTRIES LTD.
6782 OLDFIELD RD. SAANICHTON, BC, CANADA V8M 2A3
www.enviro.com
May 18, 2015
C-14887

48