PLEASE KEEP THESE INSTRUCTIONS FOR FUTURE REFERENCE

C44

HEAT DISTRIBUTION / TV KIT

NATURALLY VENTED [50-3213]

INSTRUCTION MANUAL



C ETL LISTED US
Intertek
4001609

This Heat Distribution Kit has been tested for compliance to Standards: ANSI Z21.88-2014 and CSA Z2.33-2014.

This Heat Distribution Kit has been approved for use on the **ENVIRO C44** Direct Vent fireplace only and **must be installed at the time of fireplace installation**.

The following instructions must be followed in conjunction with the fireplace installation instructions to comply with the standards and allow safe operation of the installed fireplace.

Fr Version Française: www.enviro.com/fr.html

General Information

The purpose of this optional Heat Distribution Kit, or HDK, is to naturally re-direct the convective heat from the fireplace. Using this HDK lowers the temperatures of the front wall for installations where a TV, artwork etc. is desired directly above the fireplace. The outlet of the HDK can be raised higher up the front wall, within 4" of the room's ceiling, or ducted into a different room for a cleaner front wall.

Note: Dual Convection Fan Kit (50-3212) **may not** be used in conjunction with HDK.

Prior to installation of the HDK make sure the desired location is large enough to comply with the combustible clearances of both the HDK and C44 fireplace (see C44 Owner's Manual for fireplace installation instructions). Refer to the Framing and Clearances section of this manual for the required installation dimensions of the HDK.

Please refer to Figure 1 to ensure that all HDK parts are accounted for and have not been damaged.

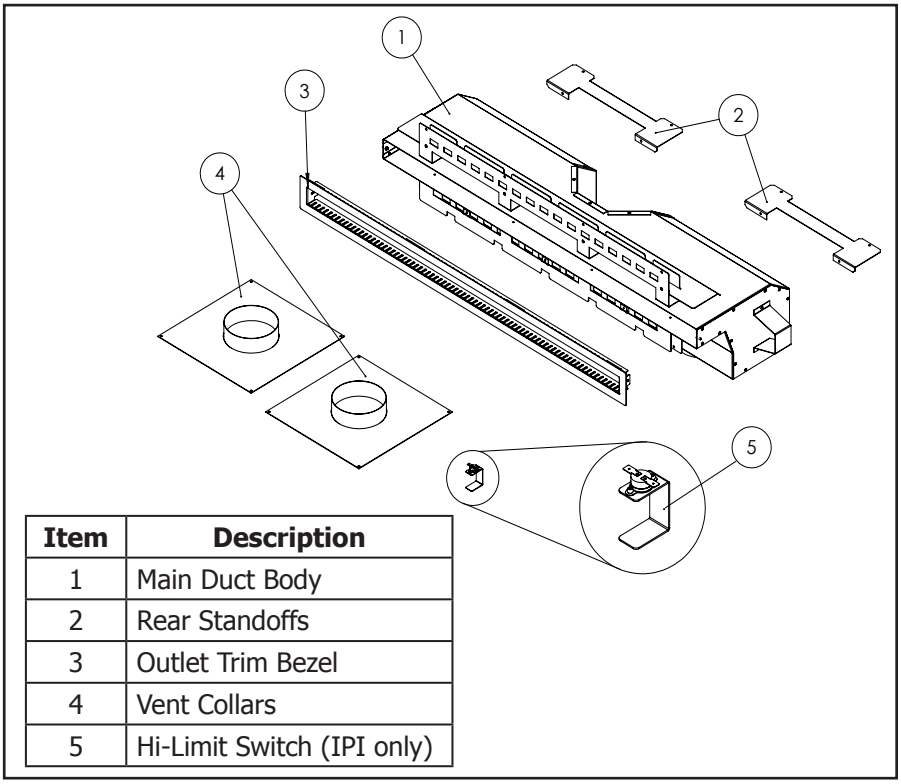

Item	Description
1	Main Duct Body
2	Rear Standoffs
3	Outlet Trim Bezel
4	Vent Collars
5	Hi-Limit Switch (IPI only)

Figure 1. Heat Distribution Kit - Parts Diagram

Dimensions

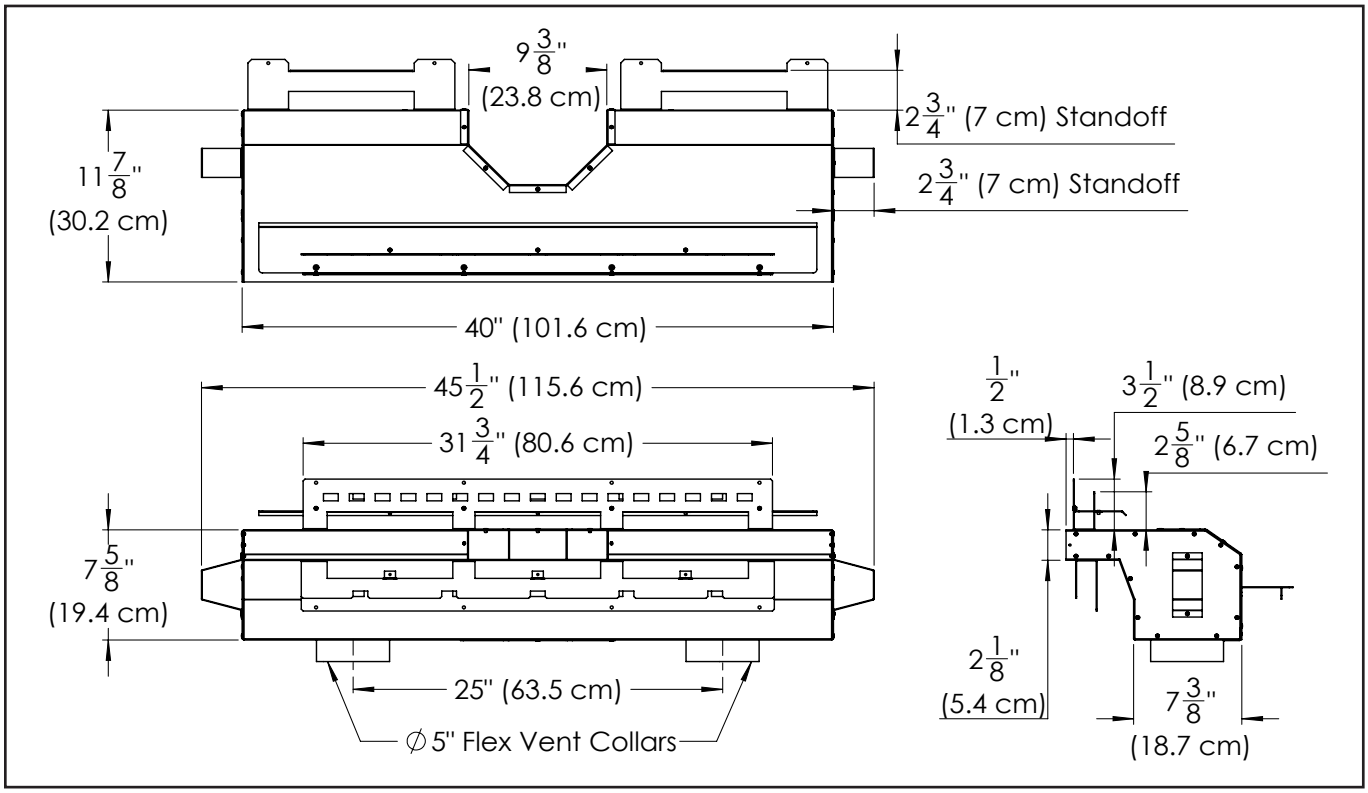

Figure 2. Heat Distribution Kit - Overall Dimensions

Framing & Clearances

QUALIFIED INSTALLERS ONLY

Framing & Rough Opening:

Refer to Figure 3 below for the minimum allowable framing and rough opening of the HDK.

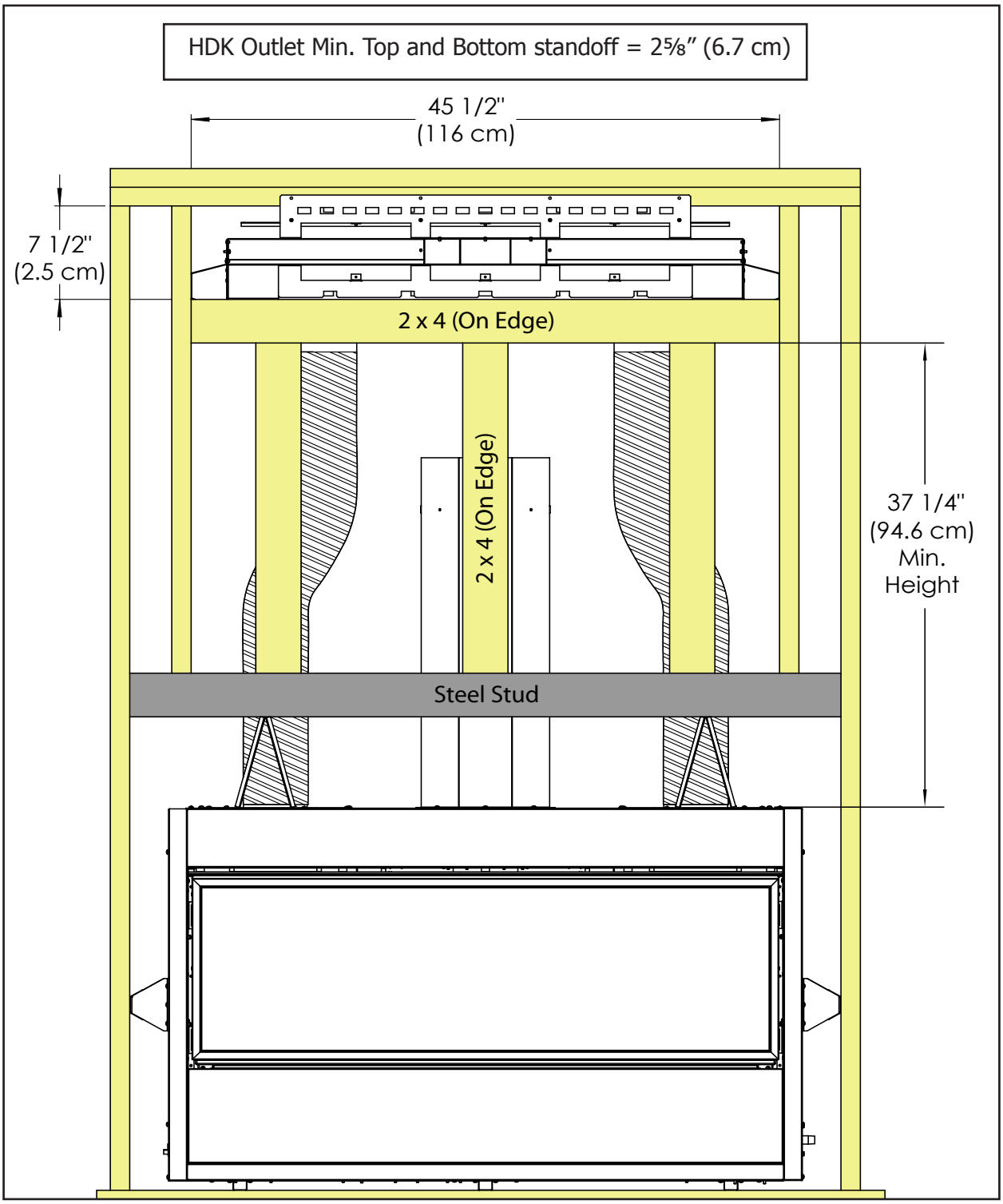

Figure 3. HDK - Framing & Rough Opening

Framing & Clearances

QUALIFIED INSTALLERS ONLY

Minimum Clearances - minimum vent:

Shown below in Figure 4 are the minimum framing and clearances for the HDK when the fireplace is installed with the minimum allowable vent length:

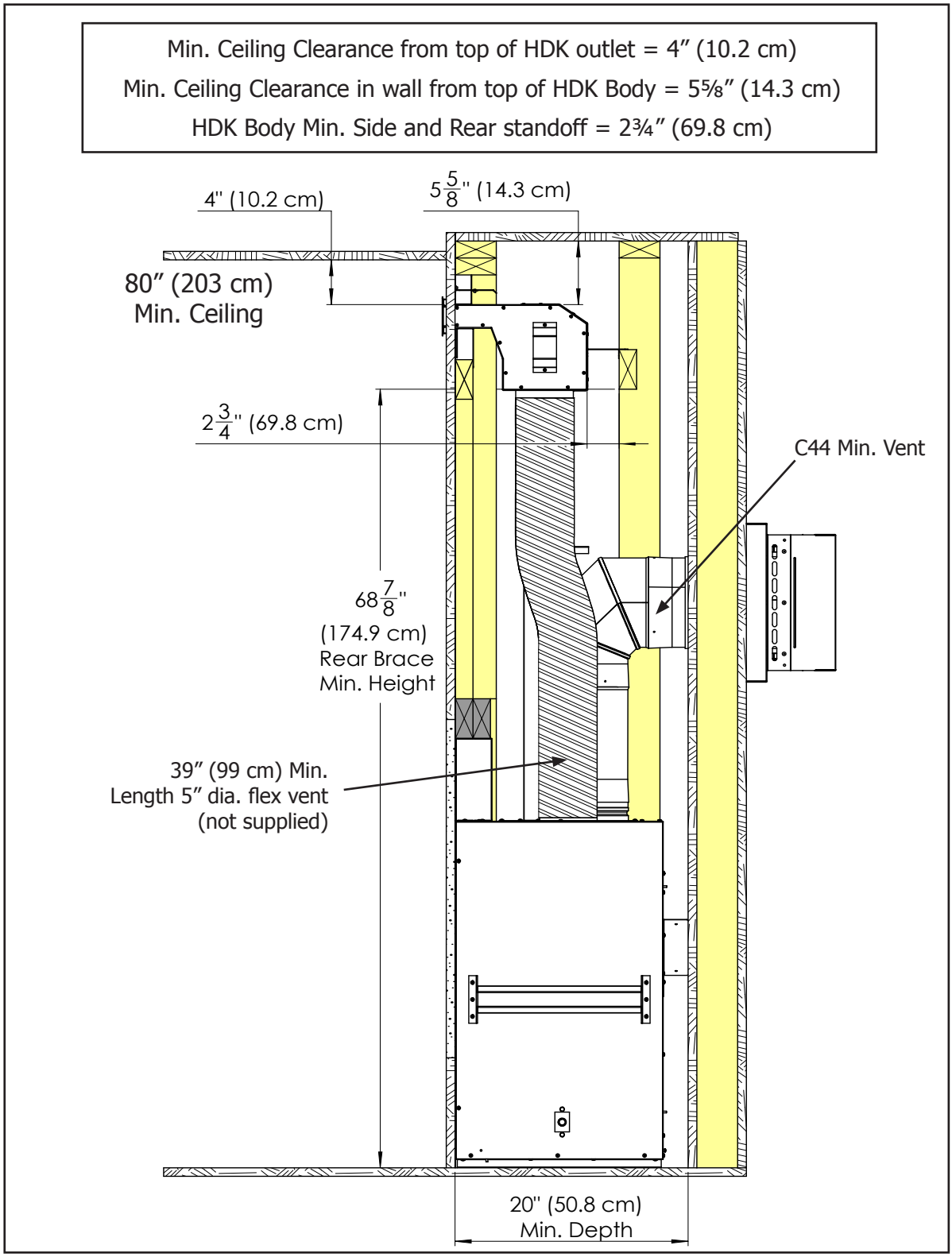

Figure 4. HDK - Min. Framing & Clearances

Framing & Clearances

QUALIFIED INSTALLERS ONLY

Minimum Clearances - vertical vent:

The HDK has been designed to allow for installations where a vertical run of vent is required without having to jog the vent pipe around the HDK (see Figure 5). The horizontal vent shield supplied with the C44 is not required (see C44 Owner's Manual) when vertically venting and the vent pipe can simply be run straight up through the cut out in the HDK.

Note: When supporting the rear of the HDK, standard venting clearances must be maintained (see C44 Owner's Manual)

Minimum Clearances - Adjoining Room:

The HDK may also be installed to discharge into another room for a cleaner installation on the fireplace side of the wall (see Figure 5). As stated in the previous section, the vent pipe can be ran straight up through the cut out in the HDK. The minimum clearances stated in Figure 5 must be maintained as well as the minimum distance between the fireplace and the HDK (see figure 3).

> ⚠ **Warning**: HDK **MUST NOT** discharge outdoors or into a garage. HDK is only approved for horizontal installation and **MUST NOT** be installed in a floor or ceiling.

When installing the HDK in an adjoining room the 5" dia. flex venting cannot exceed a vertical run of 12' (3.65 m). The flex venting also cannot exceed a horizontal run in excess of 8" (2.5 cm) for every 12" (30.5 cm) of vertical rise, up to a maximum of 8' (2.4 m).

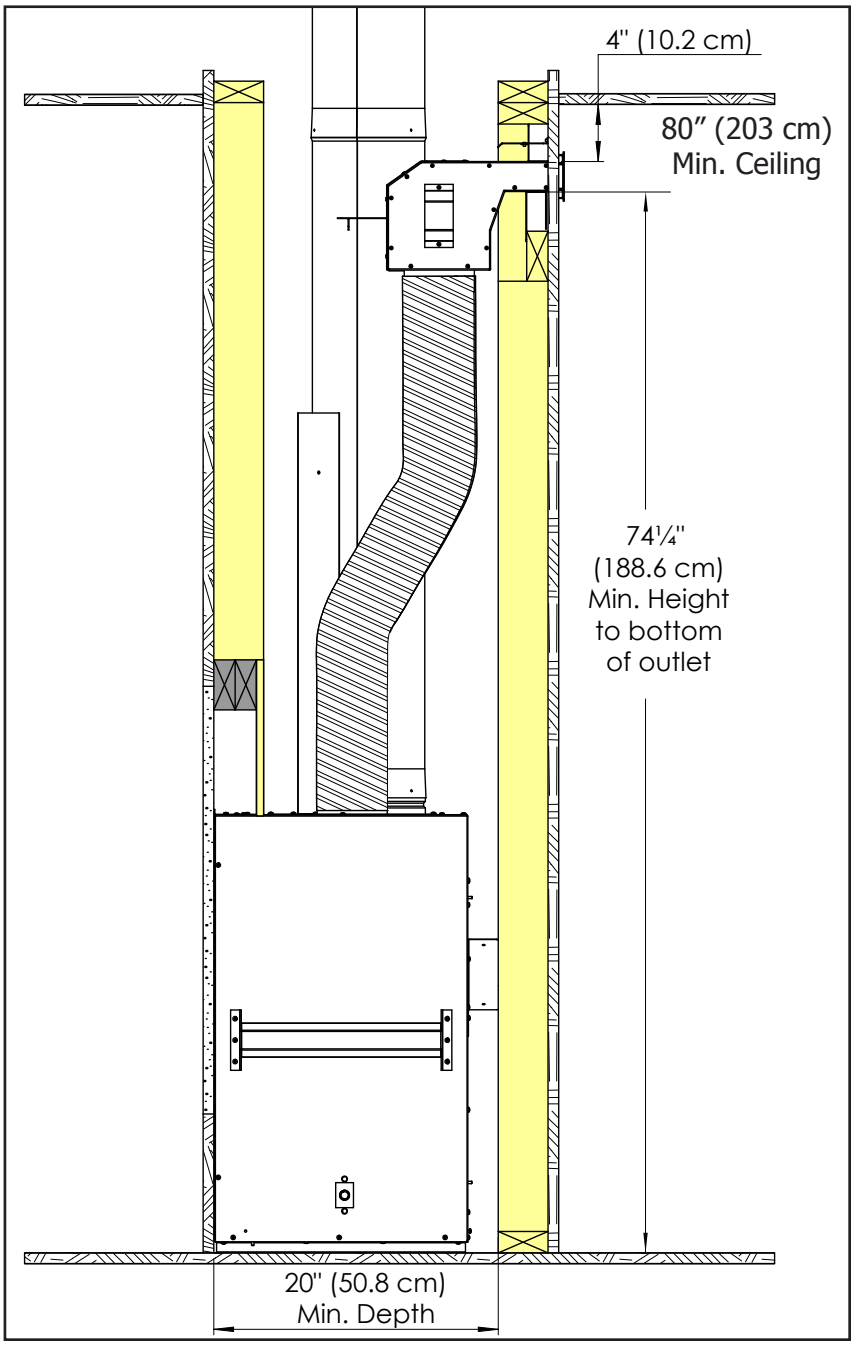

Figure 5. HDK - Adjoining Room

Framing & Clearances

QUALIFIED INSTALLERS ONLY

Finished Opening:

Combustible wall material i.e. drywall, shiplap etc. is permitted around the outlet of the HDK with a 3/8" (.95 cm) air gap required around the outside perimeter of the outlet. This creates a finished opening approx. 40¾" x 2⅞" (103.5 x 7.3 cm) in size (Figure 6).

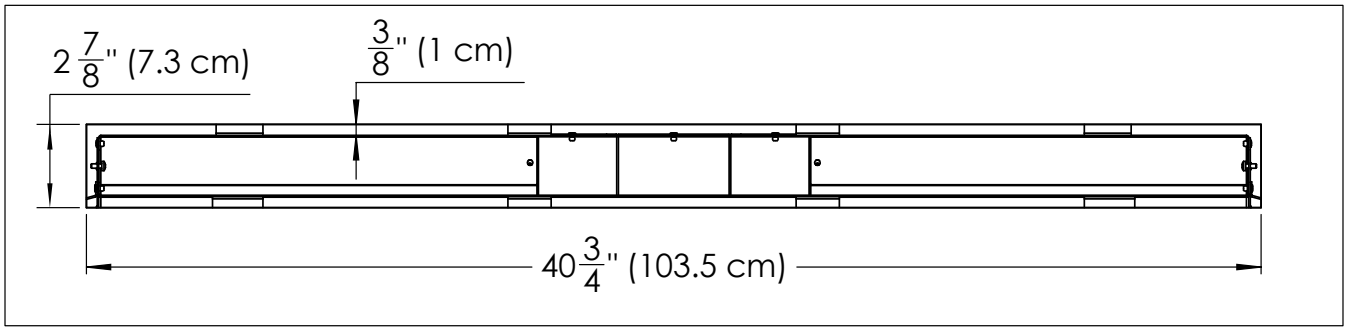

Figure 6. HDK - Outlet Finished Opening

The supplied Outlet Trim Bezel, once installed, covers the air gap for a clean finished install (Figure 7). The Trim Bezel can be adjusted to accommodate finished walls ½"-1" (1.3-2.5 cm) thick and be painted to match the colour of the wall if desired (must be hi-temperature rated).

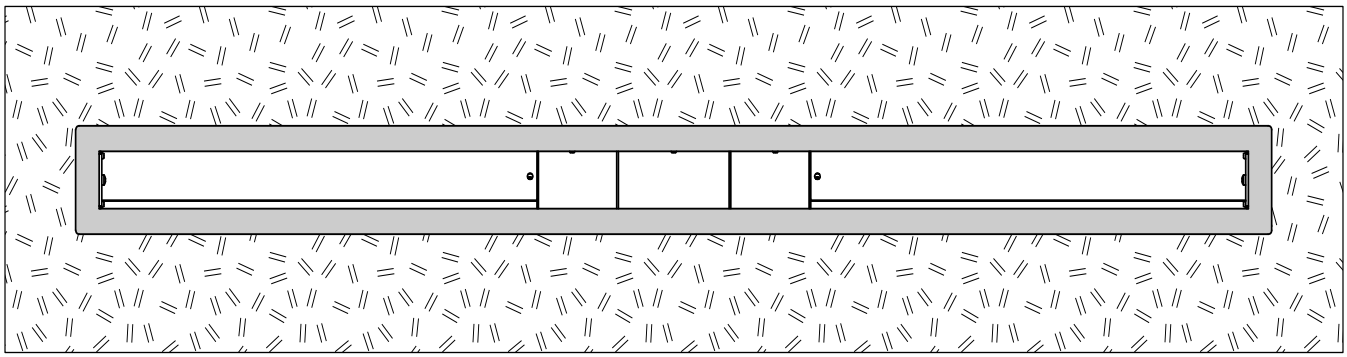

Figure 7. HDK - Outlet with Trim Bezel

Installation

Installation and service must be performed by a qualified installer, service agency or the gas supplier.

TV Installation Considerations:

If you are planning to mount a TV above your fireplace some considerations must be made to ensure it is protected from the heat.

During testing temperatures did not exceed 120°F (49°C) midway up the front wall**.** There is no guarantee that these temperatures will not harm the longevity of your TV. Make sure to consult your TV manufacturer's specifications to find the maximum allowable operating temperature. Since every home and installation is unique, temperatures should be verified at the time of install if possible. If desired, front wall temperatures can be lowered further with the use of a mantle (see C44 Owner's Manual). A TV should not be installed if temperatures exceed the manufacturers maximum allowable temperature.

Installation

QUALIFIED INSTALLERS ONLY

Hi-Limit Switch: (For Use with IPI Fireplaces Only)

Supplied with the HDK is a Hi-Limit switch assembly that must be installed if the HDK is being used on an IPI C44 fireplace. Installation of the Hi-Limit switch is easy and only takes a couple minutes.

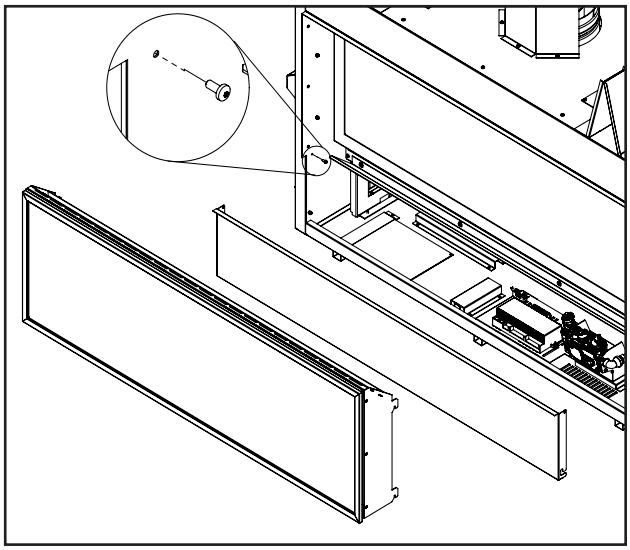

Figure 8. C44 - Front Cover Removal

Step 1: Prior to installation of the C44, remove the safety screen assembly. Next, remove the front cover using a T20 screwdriver (see Figure 8).

Step 2: Using a T20 screwdriver, loosen the left mounting screw of the IFC and slide the Hi-Limit Switch Bracket onto the IFC as shown. Next, retighten the left mounting screw (see Figure 9).

Note: Placement of the Hi-Limit switch is not arbitrary and must be correct for proper operation. When correctly installed, the bracket should contact both the mount flange and left side of the IFC (Figure 9).

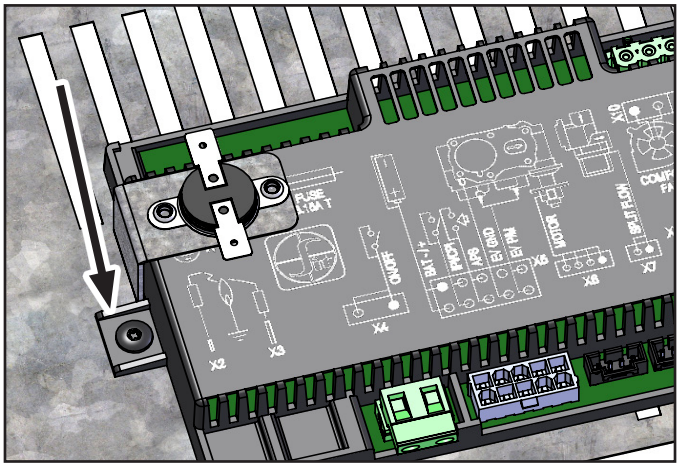

Figure 9. Hi-Limit Switch - Correct Placement

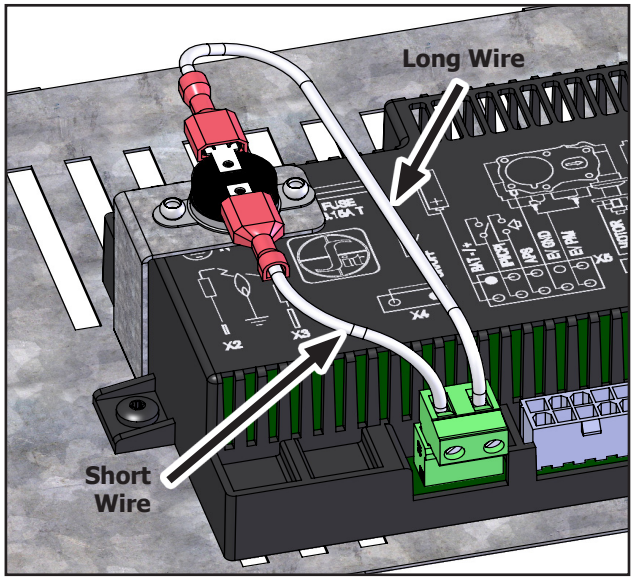

Figure 10. Hi-Limit Switch - Correct Wiring

Step 3: Using a small flat-blade screwdriver, loosen the terminals on the IFC ON/OFF plug (X4 on IFC) and remove the jumper wire (see Figure 10). Next, insert the wires from the Hi-Limit Switch and re-tighten the terminals. There is no polarity to the wires so they cannot be wired backwards.

Step 4: The Hi-Limit Switch installation is now complete. The front cover and safety screen may now be re-installed on the C44.

Note: In rare circumstances, when the HDK is installed in an adjoining room, a large difference in room pressure may temporarily cause the HDK to reverse flow. If this occurs over a prolonged period of time the Hi-Limit Switch will automatically turn off the C44 to protect the IFC. Once the C44 has cooled sufficiently (approx. 10-15 minutes) it will automatically re-start and continue normal operation.

Installation

QUALIFIED INSTALLERS ONLY

Duct Collars:

Prior to fireplace installation, the two supplied duct collars must be attached to the top of the C44 as shown in the steps below:

Step 1: Using a T20 screwdriver, remove the inner and outer cover plates from the C44 as shown (Figure 11). Each cover plate has four (4) mounting screws. Both sets of cover plates are no longer required and can be recycled. Retain eight (8) of the removed mounting screws to secure the duct collars.

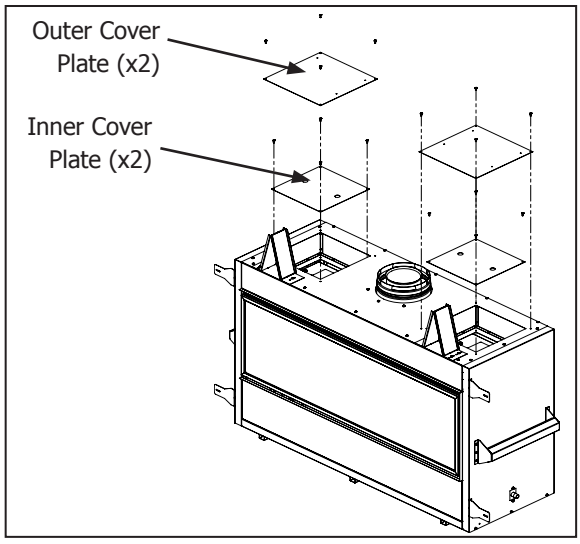

Figure 11. C44 - Cover Plate Removal

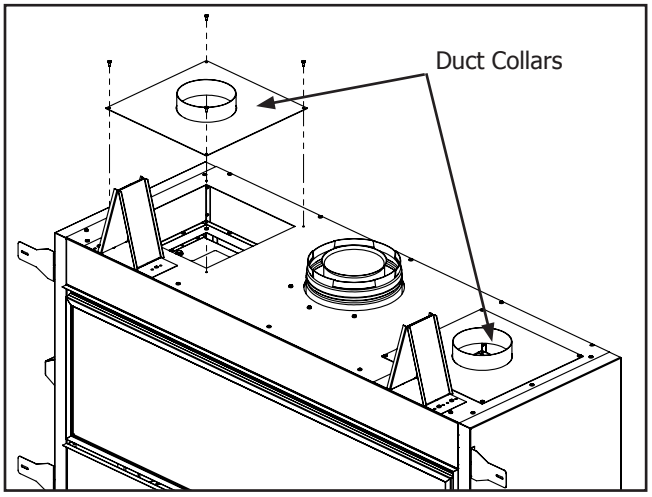

Figure 12. C44 - Duct Collars Installed

Step 2: Attach the supplied duct collars to the top of the C44 cabinet as shown (Figure 12). Secure the collars by re-using the eight (8) screws saved in the previous step.

The C44 is now HDK ready!

Rear Standoffs:

Prior to installation of the HDK the supplied set of rear standoffs need to be attached to the back of the main duct body.

Using a T20 screwdriver and the supplied screws, attach the rear standoffs with the flanges pointing down as shown in Figure 13.

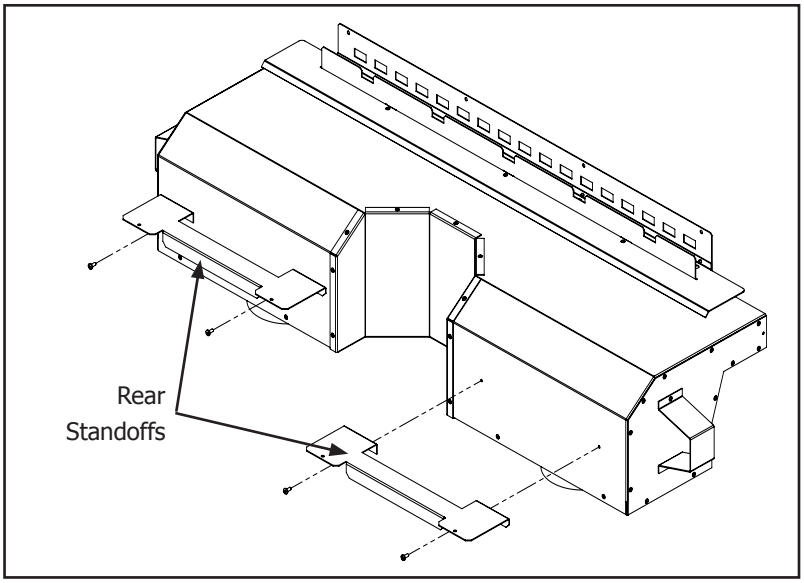

Figure 13. HDK - Rear Standoffs

Installation

QUALIFIED INSTALLERS ONLY

Heat Distribution Kit:

Step 1: Frame in the rough opening for the HDK as shown in Figure 3 (Page 3) in the desired location following all required clearances as stated in the Framing & Clearances section.

> **Note:** Light coloured ceilings may slightly discolour near the outlet when it is installed at minimum clearance (4" / 10.2 cm). Increasing the ceiling clearance will help prevent this.

Step 2: Using a T20 screwdriver, remove the screw on each side of the HDK outlet retaining the Outlet Trim Bezel and remove the Bezel (Figure 14).

Step 3: Insert the assembled HDK into the framed rough opening by rotating it down slightly to allow the outlet and standoffs to pass through. When installed correctly the front flange of the top standoff should be up against the front face of the top stud (Figure 3 & 15).

Step 4: Confirm the HDK is centered within the rough opening and secure in place using screws or nails through the four (4) holes along the top edge of the top standoff.

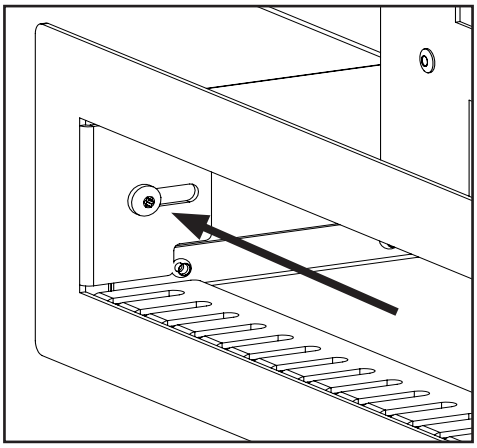

Figure 14. Outlet Trim Bezel Screw

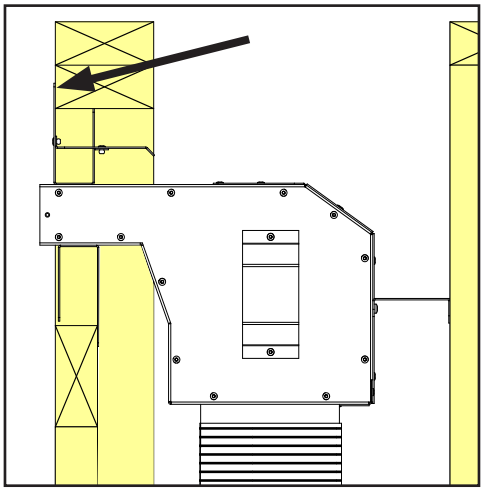

Figure 15. HDK - Top Standoff

Step 5: Secure the rear standoffs to support the remainder of the HDK ensuring it is level. If left unlevel, the outlet of the HDK will be out of square causing possible fitment issues with the Outlet Trim Bezel.

Step 6: Install the C44 fireplace in the desired location as directed in the Owner's Manual. Leave the front wall open for installation of the flex venting.

> **Note:** Flex venting must be non-insulated and listed to UL 1777 and ULC S635 standards

Step 7: Connect the required lengths of 5" dia. stainless steel or aluminium flex vent (not supplied) between the collars on the C44 and HDK. Secure the venting to the collars using either sheet metal screws or band clamps. **Both collars on the HDK must be connected to the C44 via 5" dia. flex vent.** Secure the flex venting where necessary to maintain standard venting clearances:

Table 1. Flex Vent - Minimum Clearances

Vertical Pipe to the Side Walls	Horizontal Pipe to the Sides & Bottom	Above an Elbow Above the Unit	Above an Elbow Not Above the Unit	Above Horizontal Vent Pipe
1" (25.4 mm)	1" (25.4 mm)	3" (76.2 mm)	3" (76.2 mm)	2" (51 mm)

QUALIFIED INSTALLERS ONLY

Step 8: Finish the front wall around the fireplace and HDK outlet as desired. Ensure the finished opening around the HDK outlet is as specified in the FINISHED OPENING section of this manual.

Step 9: Finally, install the Outlet Trim Bezel by sliding it into the outlet until the backside contacts the finished wall surface.

> ⚠ **Warning**: HDK outlet **MUST NOT** be covered or blocked in any way by drapes, furniture etc.

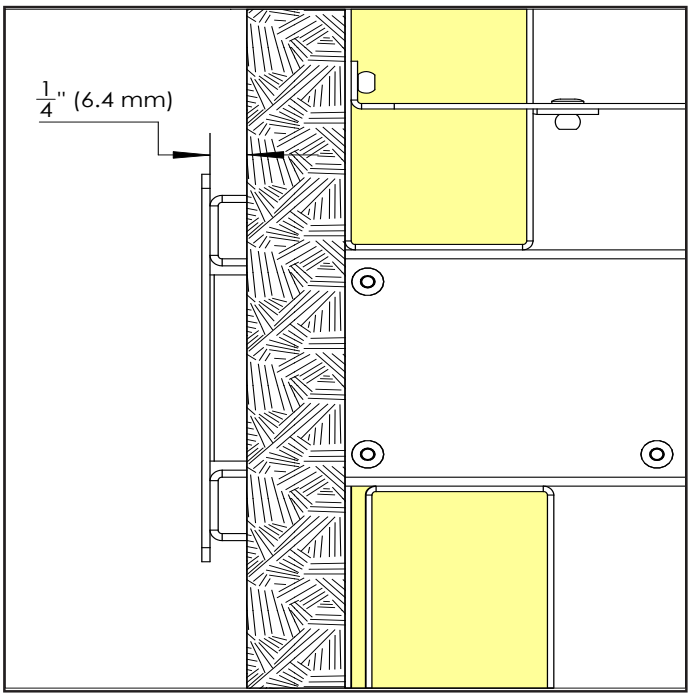

Figure 16. Outlet Trim Bezel - Standoff

Next, re-install the two (2) screws removed in Step 2 to secure the Outlet Trim Bezel in place. When installed correctly there is a ¼" (6.4 mm) standoff between the back side of the Bezel and finished wall (Figure 16).

Installation of the Heat Distribution Kit is now complete and the remaining fireplace installation can be completed as directed in the Owner's Manual.

Replacement Parts

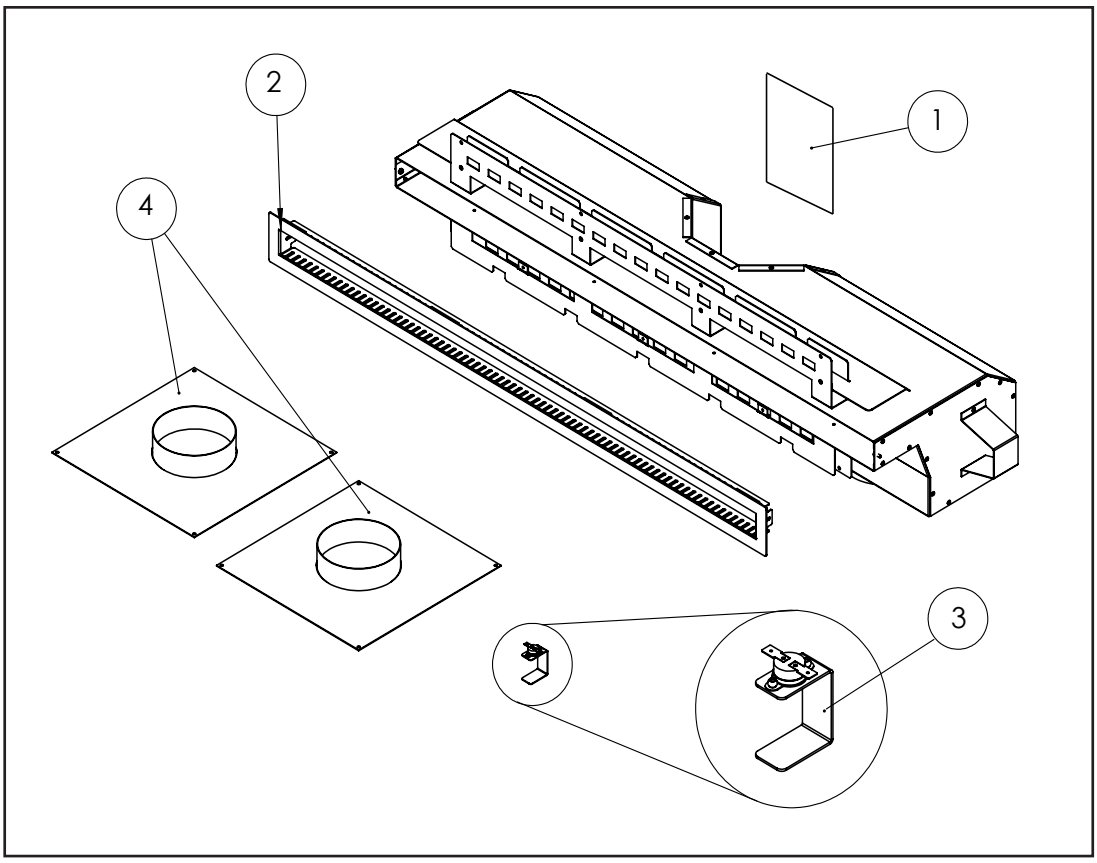

Item	Description	Part Number
1	C44 HDK Instruction Manual	50-3306
2	Outlet Trim Bezel	50-3307
3	Hi-Limit Switch (IPI only)	50-3308
4	Vent Collars (Set of 2)	50-3309

MANUFACTURED BY:
SHERWOOD INDUSTRIES LTD.
6782 OLDFIELD RD. SAANICHTON, BC, CANADA V8M 2A3
www.enviro.com
March 14, 2017
C-14984