WARRANTY REGISTRATION
enviro.com/warranty

Enviro®

C60I

DIRECT VENT FIREPLACE - IPI

OWNER'S MANUAL



C ETL LISTED US CM
Intertek
4001609

WARNING: If the information in this manual is not followed exactly, a fire or explosion may result causing property damage, personal injury or loss of life. Installation and service must be performed by a qualified installer, service agency or the gas supplier.

Fr Version Française: www.enviro.com/fr.html

50-3393

Safety Precautions

WARNING:

FIRE OR EXPLOSION HAZARD

Failure to follow safety warnings exactly could result in serious injury, death, or property damage.

- Do not store or use gasoline or other flammable vapors and liquids in the vicinity of this or any other appliance.

- WHAT TO DO IF YOU SMELL GAS

- **Do not try to light any appliance.**
- **Do not touch any electrical switch; do not use any phone in your building.**
- **Leave the building immediately.**
- **Immediately call your gas supplier from a neighbor's phone. Follow the gas supplier's instructions.**
- **If you cannot reach your gas supplier, call the fire department.**

- Installation and service must be performed by a qualified installer, service agency or the gas supplier.

INSTALLER:
Leave this manual with the appliance.

CONSUMER:
Retain this manual for future reference.

This appliance may be installed in an after-market permanently located, manufactured (mobile) home, where not prohibited by local codes.

This appliance is only for use with the type of gas indicated on the rating plate. This appliance is not convertible for use with other gases, unless a certified kit is used.

Only doors certified with the appliance shall be used

Massachusetts installations (Warning): This product must be installed by a licensed plumber or gas fitter when installed within the Commonwealth of Massachusetts. Other Massachusetts code requirements: Flexible connector must not be longer than 36in., a shut off valve must be installed; only direct vent sealed combustion products are approved for bedrooms/bathrooms. A carbon monoxide detector is required in all rooms containing gas fired direct vent appliances. The fireplace damper must be removed or welded in the open position prior to installation of a fireplace insert.

Safety Precautions

FOR SAFE INSTALLATION AND OPERATION OF YOUR "ENVIRO" HEATER, PLEASE CAREFULLY READ THE FOLLOWING INFORMATION:

• All ENVIRO gas-fired appliances must be installed in accordance with their instructions. Carefully read all the instructions in this manual first. Consult the building authority having jurisdiction to determine the need for a permit prior to commencing the installation.

• **NOTE:** Failure to follow these instructions could cause a malfunction of the fireplace, which could result in death, serious bodily injury, and/or property damage.

• Failure to follow these instructions may also void your fire insurance and/or warranty.

GENERAL

• Installation and repair should be done by a qualified service person. The appliance should be inspected before the first use and, at least, annually by a qualified service person. More frequent cleaning may be required due to excessive lint from carpeting, bedding material, etc. It is imperative the control compartments, burners and circulating air passageways of the appliance be kept clean.

• Due to high temperatures, the appliance should be located out of high traffic areas and away from furniture and draperies.

Children and adults should be alerted to the hazards of high surface temperatures and should stay away to avoid burn or clothing ignition.

• Young children should be carefully supervised when in the same room as the appliance. Toddlers, young children and others may be susceptible to accidental contact burns. A physical barrier is required if there is a risk for individuals in the house. To restrict access to a fireplace or stove install an adjustable safety gate to keep toddlers, young children and other at risk individuals out of the room and away from hot surfaces. Any safety screen, guard, or barrier removed for servicing an appliance must be replaced prior to operating the appliance.

• Clothing or other flammable materials should not be placed on or near the appliance.

DANGER



HOT GLASS WILL CAUSE BURNS

DO NOT TOUCH GLASS UNTIL COOLED.

NEVER ALLOW CHILDREN TO TOUCH GLASS.

A barrier designed to reduce the risk of burns from the hot viewing glass is provided with this appliance and shall be installed for the protection of children and other at-risk individuals.

• A barrier designed to reduce the risk of burns from the hot viewing glass is provided with this appliance and shall be installed for the protection of children and other at-risk individuals. If the barrier becomes damaged, the barrier shall be replaced with the manufacturer's barrier for this appliance.

FOR YOUR SAFETY

• Installation and service must be performed by a qualified installer, service agency or gas supplier.

• This installation must conform to local codes or, in the absence of local codes, with the National Fuel Gas Code, ANSI Z223.1/NFPA 54, or the Natural Gas and Propane Installation Code, CSA B149.1.

• To prevent injury, do not allow anyone who is unfamiliar with the stove to operate it.

• To prevent injury, if the pilot or pilot and burners have gone out on their own, open the glass door and wait 5 minutes to air out before attempting to re-light the stove.

• Always keep the area around these appliances clear of combustible material, gasoline and other flammable liquids and vapours.

• These appliances should not be used as a drying rack for clothing or for hanging Christmas stockings/decorations.

• Due to the paint curing on the stove, a faint odor and slight smoking will likely be noticed when the stove is first used. Open a window until the smoking stops.

Always connect this gas stove to a vent system and vent to the outside of the building envelope. Never vent to another room or inside the building. Make sure the specified vent pipe is used, properly sized and of adequate height to provide sufficient draft. Inspect the venting system annually for blockage and signs of deterioration.

WARNING: Failure to position the parts in accordance with the diagrams in this booklet, or failure to use only parts specifically approved with this appliance, may result in property damage or personal injury.

WARNING: Do not operate with the glass front removed, cracked or broken. Replacement of the glass should be done by a licensed or qualified service person.

• Never use solid fuels such as wood, paper, cardboard, coal, or any flammable liquids, etc., in this appliance.

• Do not use this appliance if any part has been under water. Immediately call a qualified service technician to inspect the appliance and to replace any part of the control system or any gas control which has been under water.

• Do not abuse the glass by striking it or slamming the door shut.

• If the C60I unit is pulled out of its installation, and the vent-air intake system is disconnected for any reason, ensure that the vent-air intake pipes are reconnected and re-sealed in accordance to the instructions noted in Initial Installation - Direct Vent

Table of Contents

Safety Precautions 2
Table of Contents 4
Codes And Approvals 5
Specifications 6
Dimensions: 6
Rating Label & Lighting Instructions Location: 6
Operating Instructions 7
Lighting Instructions: 7
Air Shutter (Venturi): 8
Normal Sounds During Operation: 8
Remote Control Operations: 8
System Description: 9
Technical Data: 9
Transmitter: 9
Integrated Fireplace Controller (IFC): 10
Operating Procedure: 11
Switching to Continuous Pilot Mode: 11
Maintenance And Service 14
Routine Maintenance: 14
Cleaning The Glass: 14
Cleaning The Firebox: 14
Replacing the Glass: 14
Cleaning Decorative Surfaces: 15
Safety Screen: 15
Glass Door Removal: 16
Burner Removal: 16
Access Panels: 17
Fuel Conversion: 17
Fuel Conversion: 18
Initial Installation 20
Introduction: 20
Unit Install Preperation: 20
Placement and Framing: 21
Alternate Gas Inlet Location 22
Vent Termination Framing: 22
Floor Protection: 23
Mantel Requirements: 23
Installation with Recess 25
Corner Installation: 26
Horizontal Vent Install: 27
Vertical Vent Install: 27
Flexible Vent Install: 28
Clearances & Non-Combustible : 29
TV Installation Considerations: 30
Vent Termination Restrictions: 31
Direct Vent: 31
Venting Clearances: 32
Approved Venting Parts: 33
Allowable Co-Axial Vent Configurations: 34
Exhuast Restrictor Setting: 36
Horizontal Termination: 37
Vertical Termination: 38
Gas Line Connection and Testing: 40
Electrical Requirements: 41
Secondary Installation 45
Burner Tray Installation: 45
Panel Installation: 46
Burner and Tray Media Installation: 47
Log Set Installation: 48
Trouble Shooting 49
Parts Diagram 50
Parts List 51

Codes And Approvals

DIRECT VENT ONLY: This type is identified by the suffix DV. This appliance draws all of its air for combustion from outside the dwelling, through a specially designed vent pipe system.

This appliance has been tested and approved for installations from 0 feet to 4500 feet (1372 m) above sea level.

In the USA: The appliance may be installed at higher altitudes. Please refer to your American Gas Association guidelines which state: the sea level rated input of Gas Designed Appliances installed at elevations above 2000 (610 m) feet is to be reduced 4% for each 1000 feet (305 m) above sea level. Refer also to local authorities or codes which have jurisdiction in your area regarding the de-rate guidelines.

In Canada: When the appliance is installed at elevations above 4500 feet (1372 m), the certified high altitude rating shall be reduced at the rate of 4% for each additional 1000 feet (305 m).

- This appliance has been tested by INTERTEK and found to comply with the established VENTED GAS FIREPLACE HEATER standards in CANADA and the USA as follows:

VENTED GAS FIREPLACE HEATER (C60I ; NATURAL GAS, PROPANE GAS)

TESTED TO: ANSI Z21.88-2016/CSA 2.33-2016 VENTED GAS FIREPLACE HEATERS

CAN/CGA 2.17-M91 (R2009) GAS FIRED APPLIANCES FOR HIGH ALTITUDES

This ENVIRO C60I Fireplace:

- Has been certified for use with either natural gas or propane (see rating label).
- Is not for use with solid fuels.
- Is approved for a bedroom or bed sitting room. (**IN CANADA**: must be installed with a listed wall thermostat. **IN USA**: see current ANSI Z223.1 for installation instructions.)
- Must be installed in accordance with local codes. If none exist, use current installation code CAN/CGA B149.1 in Canada or ANSI Z223.1/NFPA 54 in the USA.
- Must be properly connected to an approved venting system and not connected to a chimney flue serving a separate solid-fuel burning appliance.

IMPORTANT NOTICE (Regarding first fire up): When the unit is turned on for the first time, it should be turned onto high without the fan on (if equipped) for the first 4 hours. This will cure the paint, logs, gasket material and other products used in the manufacturing process. It is advisable to open a window or door, as the unit will start to smoke and can irritate some people. After the unit has gone through the first burn, turn the unit off including the pilot, let the unit get cold then remove the glass door and clean it with a good gas fireplace glass cleaner, available at your local ENVIRO dealer.

NATIONAL FIREPLACE INSTITUTE®

NFI

CERTIFIED

www.nficertified.org

We recommend that our gas hearth products be installed and serviced by professionals who are certified in the U.S. by the National Fireplace Institute® (NFI) as NFI Gas Specialists.

Specifications

Dimensions:

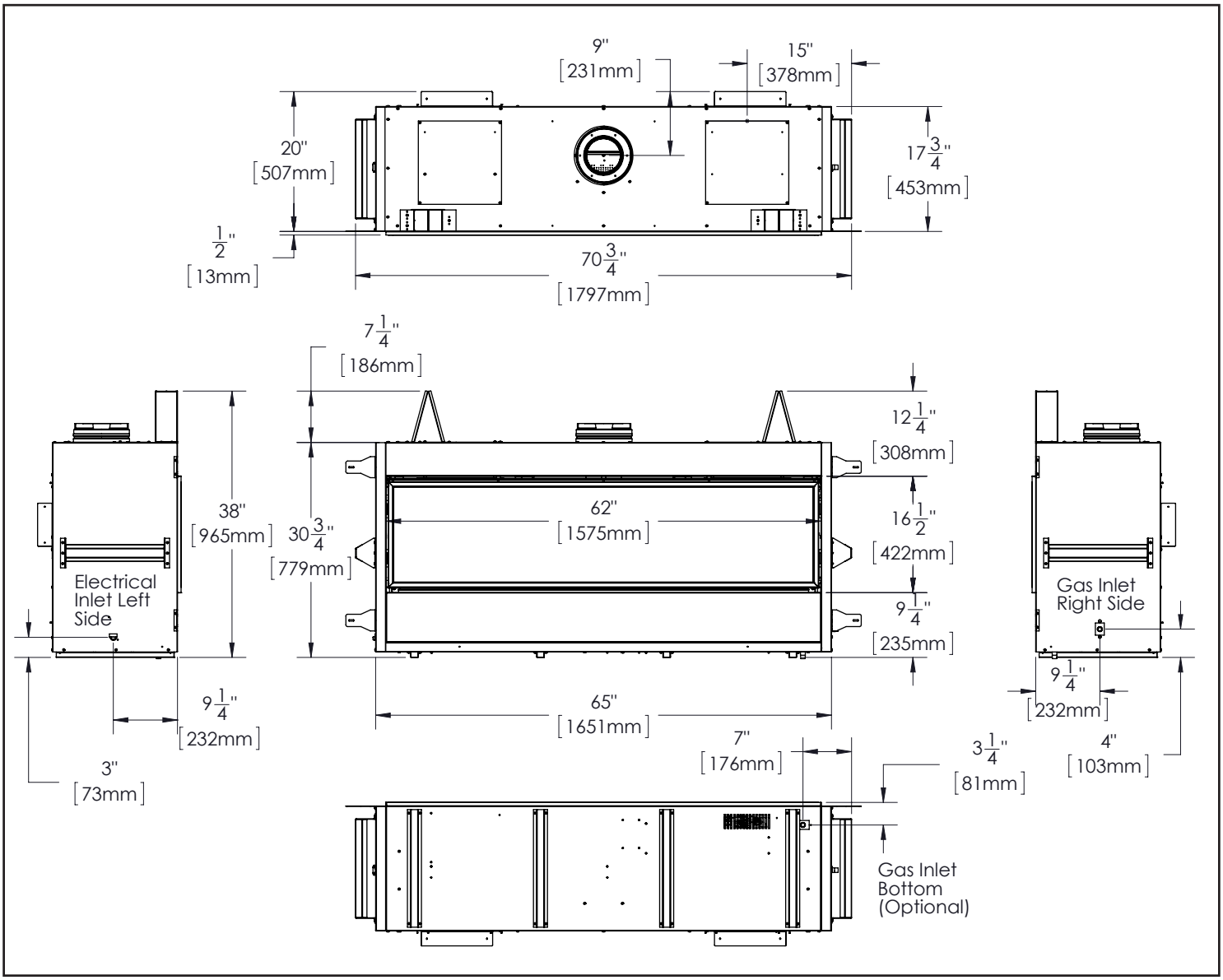

Figure 1. Unit Dimensions

Rating Label & Lighting Instructions Location:

Rotate the safety screen upward or remove the screen completely to access the rating label and lighting instructions. The plates are attached to a length of chain and are never to be tampered with or removed. All important information for your fireplace is on this label as well of the model specific serial number which you will need for warranty information. The plates are located inside the cabinet on the left side near the front.

Operating Instructions

For Your Safety, Read Safety Precautions And Lighting Instructions Before Operating

WARNING: IF YOU DO NOT FOLLOW THESE INSTRUCTIONS EXACTLY A FIRE OR EXPLOSION MAY RESULT, CAUSING PROPERTY DAMAGE, PERSONAL INJURY OF LOSS OF LIFE.

Lighting Instructions:

FOR YOUR SAFETY READ BEFORE OPERATING

WARNING: IF YOU DO NOT FOLLOW THESE INSTRUCTIONS EXACTLY, A FIRE OR EXPLOSION MAY RESULT CAUSING PROPERTY DAMAGE, PERSONAL INJURY OR LOSS OF LIFE.

A. This appliance is equipped with an ignition device which automatically lights the pilot. Do not try to light the pilot by hand.

B. BEFORE OPERATING smell all around the appliance area for gas. Be sure to smell next to the floor because some gas is heavier than air and will settle on the floor.

WHAT TO DO IF YOU SMELL GAS:

- Do not try to light any appliance.
- Do not touch any electrical switch; do not use any phone in your building.
- Immediately call your gas supplier from a neighbor's phone. Follow the gas supplier's instructions.
- If you cannot reach your gas supplier, call the fire department.

C. Use only your hand to push in or turn the gas control knob. Never use tools. If the knob will not push in or turn by hand, don't try to repair it, call a qualified service technician. Force or attempted repair may result in a fire or explosion.

D. Do not use this appliance if any part has been under water. Immediately call a qualified service technician to inspect the appliance and to replace any part of the control system and any gas control which has been under water.

OPERATING INSTRUCTIONS

1. STOP! Read the safety information above on this label.
2. Read the owner's manual including the section on "Remote Control" operation.
3. Set the thermostat to the lowest setting.
4. Turn off all electric power to the appliance.
5. Do not attempt to light the pilot by hand.
6. Wait five (5) minutes to clear out any gas. Then smell for gas, including near the floor. If you smell gas, STOP! Follow "B" in the safety information above on this label. If you don't smell gas, go to the next step.
7. Turn on all electric power to the appliance.
8. Using the remote control, set thermostat to desired setting, or press the ON/OFF key on the remote. "ON" will be indicated on the display of the remote and an audible "beep" will be heard at the unit to indicate the command has been received.
9. This appliance is equipped with a completely automatic ignition and lighting control. The control will attempt to light the pilot several times if necessary. If it is unsuccessful, it will discontinue operations. If the appliance will not operate, follow the instructions "To Turn Off Gas To Appliance" and call your service technician or gas supplier.

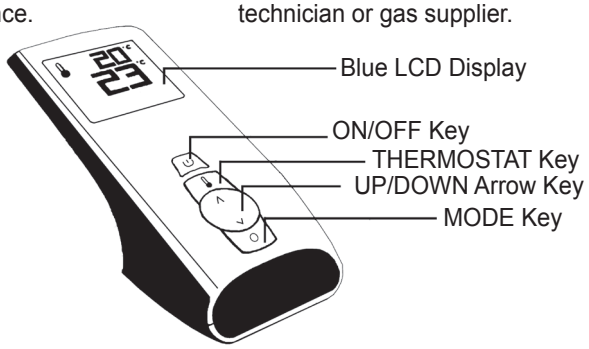

TO TURN OFF GAS TO APPLIANCE

1. Set thermostat to lowest setting, or press the ON/OFF Key. "OFF" will be indicated on the display and an audible "Beep" will be heard at the unit to indicate the command has been received.
2. Turn off all electric power to the appliance if service is to be performed.

C-12455

Figure 2. IPI Lighting Instruction Label

Air Shutter (Venturi):

The air shutter plays a very important role in flame appearence and combustion quality. The shutter adjusts how much air gets mixed with the gas before it ignites. Adjustments can be made to accomodate various climates and vent configurations.

To gain access to the air shutter remove the safety screen and intake shield. There is a lever underneath the firebox near the gas valve as shown in Figure 3. Moving the lever to the right will close off the air mixing with the gas and will make the flame appear more yellow and tall. Moving the lever to the left will open up the shutter allowing more air to be mixed with the incoming gas; this will make the flames appear more blue and short.

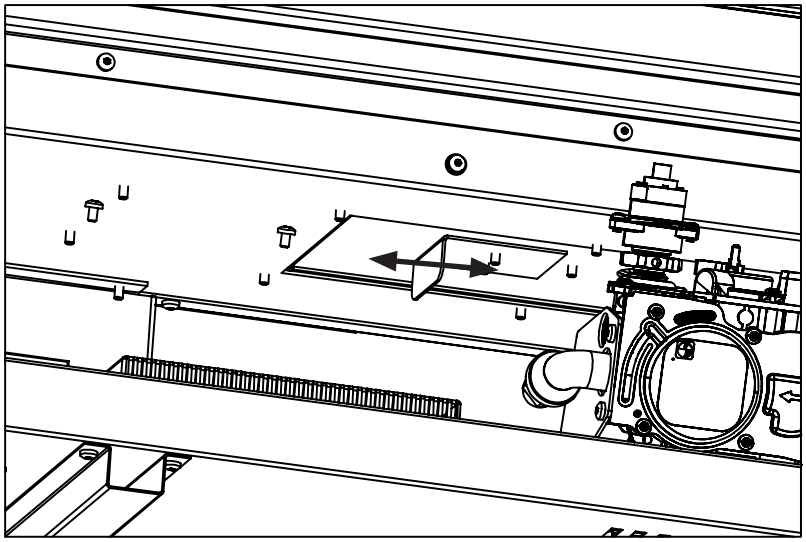

Figure 3. Air shutter adjustment lever

Typically natural gas flames will require the shutter to be more closed.

Typically LP flames will require the shutter to be more open.

If you cannot attain the proper flame by making air shutter adjustments then you may have the incorrect exhaust restrictor.

If the flame is very flickery, fast moving, and low then increase the restriction.

If the flame is very tall, lazy, and dirty then decrease the restriction.

More details can be found in the venting section of this manual.

Caution: Wear heat resistent gloves when making adjustments to the air shutter. Perform adjustments after 15 minutes.

Normal Sounds During Operation:

Table 1: Normal Sounds

Component	Sound & Reason
Main Unit	Creaking when heating up or cooling down.
Burner	Light pop or poof when turned off; this is more common with LP units.
Temperature Sensor	Clinking when it senses to turn the blower on or off.
Pilot Flame	Quiet whisper while the pilot flame in on.
Blower / Fan	Air movement that increase and decreases with the speed of the blower. The blower is pushing the heat from the fireplace into the room.
Gas Control Valve	Dull click when turning on or off, this is the valve opening and closing.

Remote Control Operations:

Proflame 2 is a modular remote control system that directs the functions of the C60I. The Proflame 2 transmitter (remote) is configured to control the on/off main burner operation, its flame levels and provides on/off and thermostatic control of the appliance. The system also controls the optional fan speed through six (6) levels and can control the operation of the option light kit.

Operating Instructions

System Description:

The Proflame 2 Remote Control System consists of two (2) elements:
1. Proflame 2 Transmitter.
2. Integrated Fireplace Controller (IFC) and a wiring harness to connect to the gas valve and stepper motor.

ATTENTION!

- TURN "OFF" THE MAIN GAS SUPPLY OF THE APPLIANCE DURING INSTALLATION OR MAINTENANCE OF THE IFC.

- TURN "OFF" MAIN GAS SUPPLY TO THE APPLIANCE PRIOR TO REMOVING OR REINSERTING THE BATTERIES IN THE BATTERY HOLDER

Technical Data:

Transmitter (Remote Control):

Supply voltage: 4.5 V (three 1.5 V AAA batteries)
Radio frequency: 315 MHz

Integrated Fireplace Controller (IFC):

Supply voltage: AC IN - 120 V / 60 Hz
Battery Backup IN - 6 Vdc - 200mA (four 1.5 V AA batteries)
Spark voltage / frequency: >10kV / 1Hz
Comfort modulating fan: 120 V / 60 Hz / 2A
Auxiliary: 120 V / 60 Hz / 5A (not used)

Transmitter:

The Proflame 2 Transmitter is a black remote control with a blue backlit lcd display. It uses a streamline design with a simple button layout and informative lcd readout (Figure 5). The Transmitter is powered by three (3) AAA type batteries. A Mode Key is provided to Index between the features and a Thermostat Key is used to turn on/off or index through Thermostat functions (Figure 4 & 5)

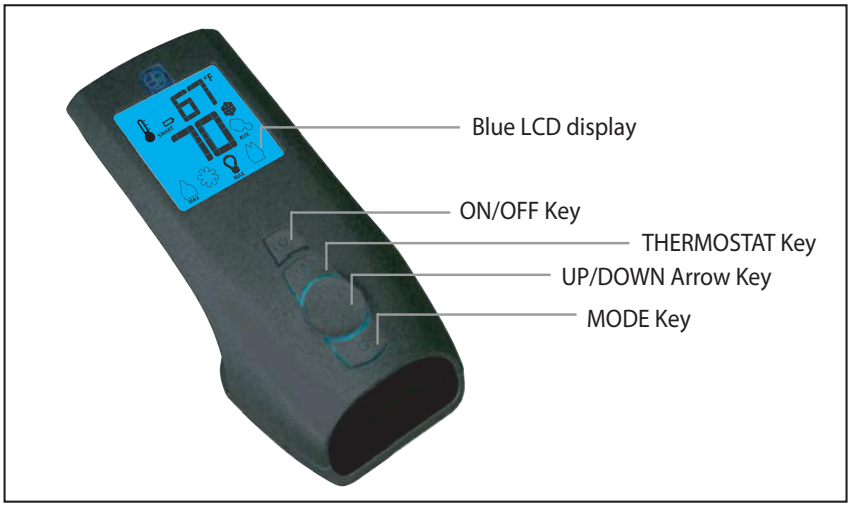

Figure 4: Proflame 2 Transmitter.

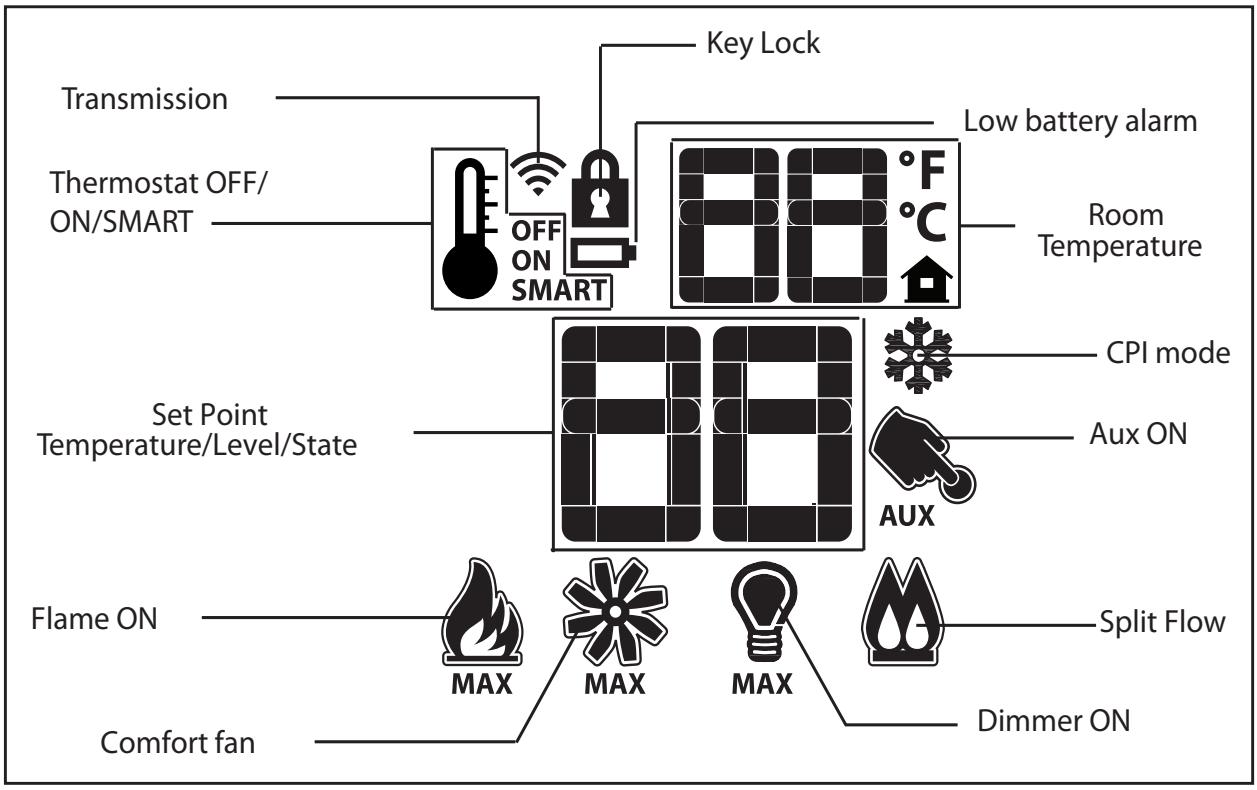

Figure 5: Proflame 2 Transmitter LCD Screen.

Integrated Fireplace Controller (IFC):

The Proflame 2 IFC (Figure 6) connects directly to the gas valve, stepper motor, pilot, covection fans (optional) and light kit (optional) with a wiring harness. The IFC is mainly powered by 120 VAC but can also run off a battery backup four (4) AA type batteries for shorter periods of time. The IFC accepts commands via radio frequency from the Transmitter to operate the appliance in accordance with the particular Proflame 2 system configuration. The IFC has a red reset button at the front right corner that is used is to synchronize the Transmitter when using the for the first time, or after the batteries have been replaced.

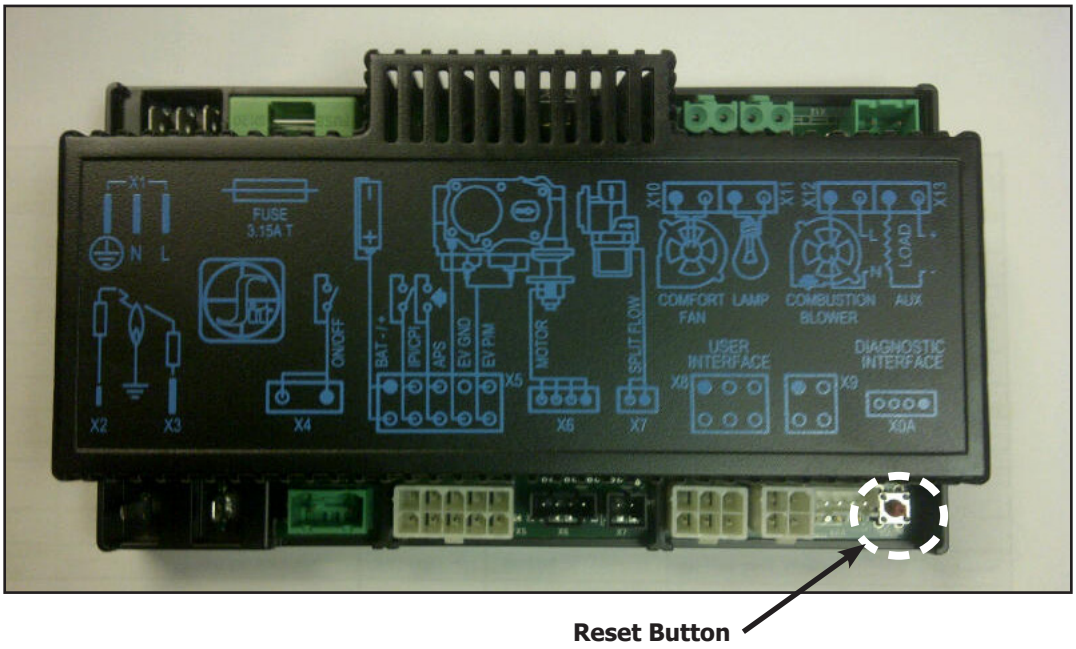

Figure 6: Integrated Fireplace Controller

Operating Procedure:

Initializing The System For The First Time

Install the four (4) AA batteries into the IFC battery holder. Note the polarity of the battery and insert into the battery bay as indicated on the body of the battery holder. Press the reset button on the IFC marked "SW1" (see Figure 6).

The IFC will "beep" three (3) times to indicate that it is ready to synchronize with a Transmitter. Install the three (3) AAA type batteries in the Transmitter battery bay, located on the base of the Transmitter. With the batteries already installed in the Transmitter, push the 'ON' button. The IFC will "beep" four (4) times to indicate the Transmitter's command is accepted and sets to the particular code of that Transmitter. The system is now initialized.

Temperature Indication Display

With the system turned OFF, press the Thermostat Key and the Mode Key at the same time. Look at the LCD screen on the transmitter to verify that a °C or °F is visible to the right of the Room Temperature display (see Figure 7).

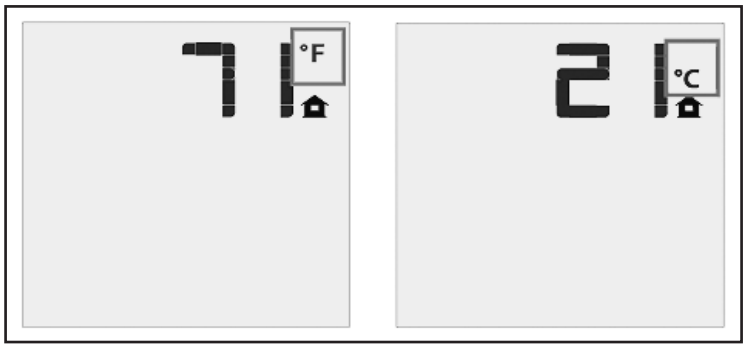

Figure 7: Remote Control Display in Farenheit and Celcius.

Turn on the Appliance

Press the ON/OFF Key on the Transmitter. The Transmitter display will show all active Icons on the screen. A single "beep" from the IFC will confirm reception of the command and will commence to first ignite the pilot light, followed by the main burner. This should take about 10 seconds to complete.

Switching to Continuous Pilot Mode:

When the C60I is turned off press the mode key to index to the constant pilot (CPI) mode icon (see figure 8). Pressing the up arrow key will select Continuous Pilot Ignition (CPI) and pressing the down arrow key will return to IPI. Once a selection is made the IFC will beep once to confirm it had received the command. **NOTE: It is recommended to use the continuous pilot mode during the winter when the outside temperature is below 50°F (10°C) to keep the chimney properly heated for updraft during burner ignition.** Continuous pilot mode also keeps the firebox warm which eliminates both heat loss to cold air that is trapped inside the firebox as well as excessive exhaust vapour condensation on the door glass.

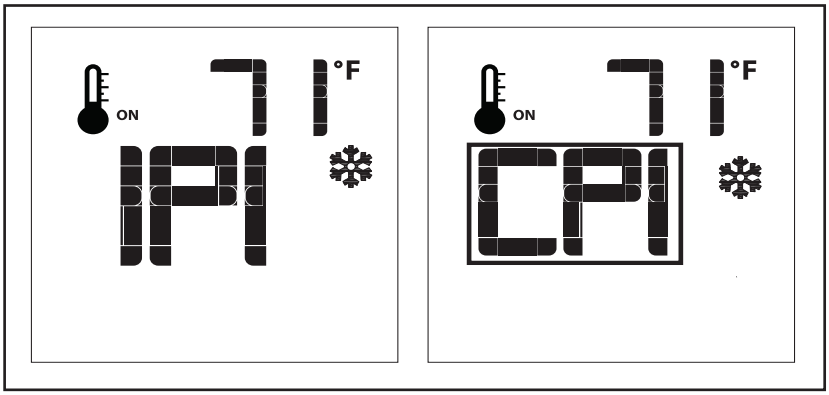

Figure 8: CPI Pilot Mode.

Turn off the Appliance

Press the ON/OFF Key on the Transmitter. The Transmitter LCD display will only show the room temperature and Icon (see Figure 9). A single "beep" from the IFC confirms reception of the command and both the pilot light (if the unit is not set to continuous pilot) and main burner will turn off.

Room Thermostat (Transmitter Operation)

The Remote Control can operate as a room thermostat. The thermostat can be set to a desired temperature to control the comfort level in a room. To activate this function, press the Thermostat Key (see Figure 4). The LCD display on the Transmitter will change to show that the room thermostat is "ON" and the set temperature is now displayed (see Figure 9). To adjust the set temperature, press the Up or Down Arrow Keys until the desired set temperature is displayed on the LCD screen of the Transmitter.

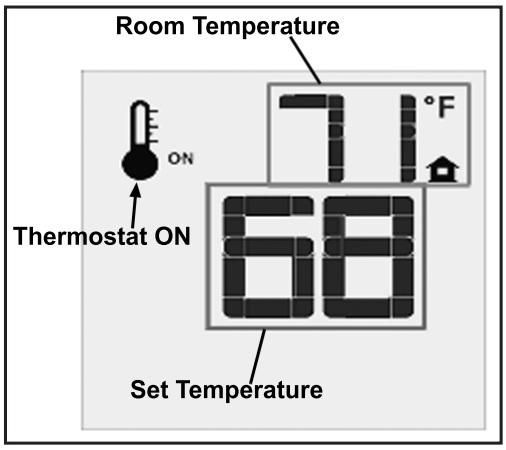

Figure 9: Remote Control Displays Set Temperature.

Smart Thermostat (Transmitter Operation)

The Smart Thermostat function adjusts the flame height in accordance to the difference between the set point temperature and the actual room temperatures. As the room temperature gets closer to the set point the Smart Function will modulate the flame down. To activate this function, press the Thermostat Key (Figure 4) until the word "SMART" appears to the right of the temperature bulb graphic (Figure 10). To adjust the set temperature, press the Up or Down Arrow Keys until the desired set temperature is displayed on the LCD screen of the Transmitter.

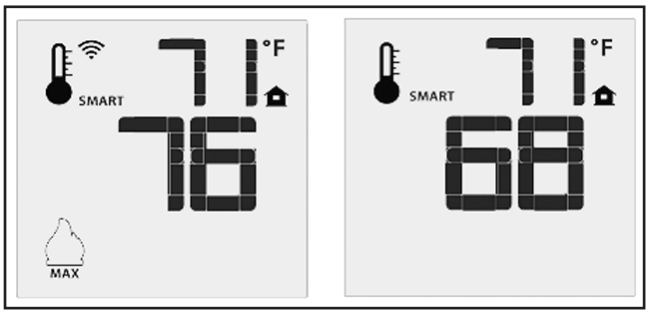

Figure 10: Remote Control's Smart Flame Function.

Remote Flame Control

The Proflame 2 remote control system has six (6) flame levels. With the system on, and the flame level at the maximum in the appliance, pressing the Down Arrow Key once will reduce the flame height by one step until the flame is turned off. The Up Arrow Key will increase the flame height each time it is pressed. If the Up Arrow Key is pressed while the system is on but the flame is off, the flame will come on in the high position. A single "beep" will confirm reception of the command.

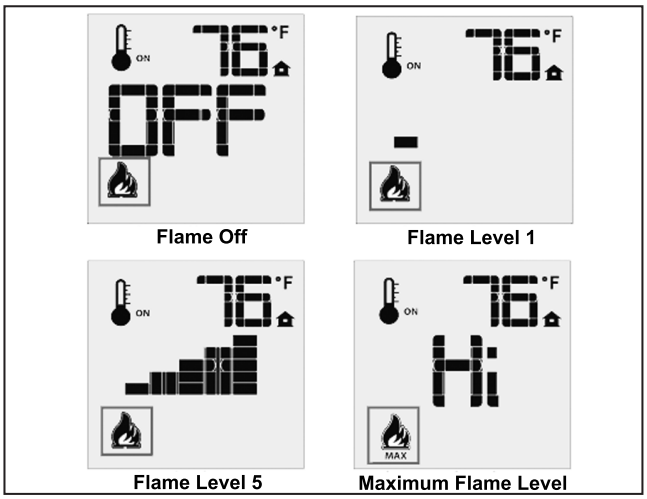

Figure 11: Remote Control's Flame Levels.

Fan Control

The C60I has a dual convection fan kit that can be controlled with the Transmitter. The fan speed can be adjusted thorugh six (6) speeds. To control the fan press the Mode key to index to the fan control icon. Use the UP/DOWN arrow keys to turn on, off, or adjust the fan speed. A single beep from the IFC will confirm the command has been received

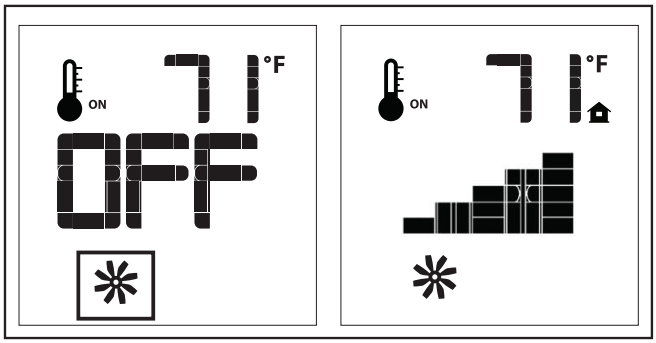

Figure 12: Fan Control

Auxiliary Control
This function is not used on the C60I and can be disregarded.

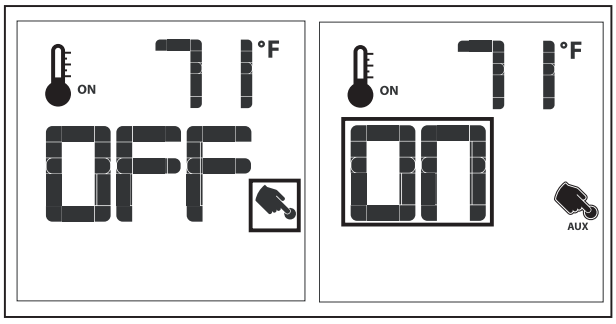

Figure 13: Auxiliary Control (not used)

Dimmer Control
This is only appliciable if the light kit has been installed. Press the mode key until the light bulb symbol is visable (Figure 14). This turn the lights on and off as well as adjust 6 dimming levels.

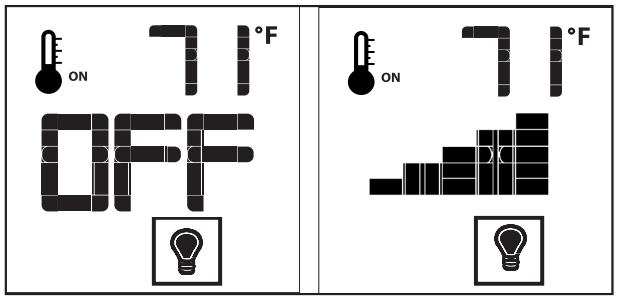

Figure 14: Dimmer Control

Key lock
This function will lock the keys to avoid unsupervised operation. To activate this function, press the Mode and UP keys at the same time and the a lock will appear (see Figure 15). To de-activate this function, press the Mode and UP Keys at the same time.

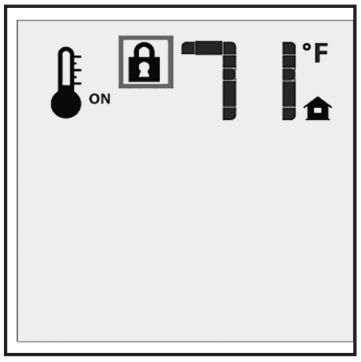

Figure 15: Key Lock

Low Battery Power Detection
Transmitter: The life span of the remote control batteris depends on various factors: quality of the batteries used, the number of ignitions of the appliance, the number of changes to the room thermostat set point etc. When the Transmitter batteries are low, a Bettery Icon will appear on the LCD display of the Transmitter (see Figure 16) before all battery power is lost. When the batteries are replaced this icon will disappear.

IFC: The life span of the IFC batteries depends on various factors during a prolonged power outage: quality of the batteries used, the number of ignitions of the appliance, the number of changes to the room thermostat set point etc. When the IFC batteries are low, No "beep" will be emitted when it receives an On/Off command from the Transmitter. This is an alert for a low battery condition for the IFC. When the batteries are replaced the "beep" will be emitted from the IFC when the ON/OFF Key is pressed (See Initializing the System for the First Time).

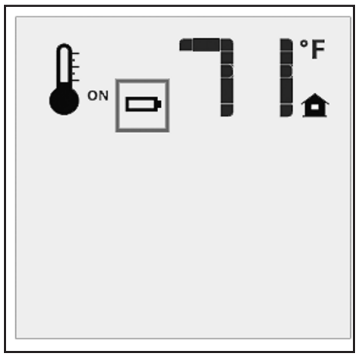

Figure 16: Low Battery

WARNING: Fire Hazard. Can cause severe injury or death. The Transmitter causes ignition of the appliance. The appliance can turn on suddenly. Keep away from the appliance burner when operating the remote system.

WARNING: Shock Hazard. Can cause severe injury or death. This device is powered by line voltage. Do not try to repair this device. In no way is the enclosure to be tampered with or opened. Disconnect from line voltage before performing any maintenance.

CAUTION: Property Damage Hazard. Excessive heat can cause property damage. The appliance can stay lit for many hours. Turn off the appliance if it is not going to be attended for any length of time. Always place the Transmitter where children cannot reach it.

Maintenance And Service

Routine Maintenance:

At least once a year, run through the following procedures to ensure the system is clean and working properly. Check the burner to see if all the ports are clear and clean. Check the pilot to make sure it is not blocked by anything. The pilot flame should be blue with little or no yellow on the tips.

Warning: Clearances must be sufficient to allow access for maintenance and service.

Warning: Failure to position the parts in accordance with this manual, or failure to use only parts specifically approved with this appliance may result in property damage or personal injury.

The venting system must be periodically examined; it is recommended the examination is done by a qualified agency.

Cleaning The Glass:

When the fireplace has cooled, remove the safety screen and glass door. See Maintenance And Service - Glass Door Removal. Check the gasket material on the back of the glass, making sure that it is attached and intact.

During a cold start up, condensation will sometimes form on the glass. This is a normal condition with all fireplaces. However, this condensation can allow dust and lint to cling to the glass surface. Initial paint curing of the appliance can leave a slight film behind the glass, a temporary problem. The glass will need cleaning about two weeks after installation. **Use a mild glass cleaner and a soft cloth**. **Abrasive cleaners will damage the glass and painted surfaces.** Depending on the amount of use, the glass should require cleaning no more than two or three times a season. **Do not clean the glass when it is hot.**

Cleaning The Firebox:

Remove the logs carefully, as they are very fragile. Gently remove all the media and place on a paper towel. Vacuum the bottom of the firebox thoroughly. Carefully clean any dust off the logs and remove any lint from the burner and pilot. At this time, inspect the burner tube for cracking or severe warping. If a problem is suspected, contact the dealer. Check the logs for deterioration or large amounts of soot; a small amount on the bottom side of the logs is normal. Replace the logs as shown in the Secondary Installation - Log Set Installation section. If new/more media is required, contact your nearest ENVIRO dealer.

Replacing the Glass:

The glass in the fireplace is a high temperature ceramic. If the glass is damaged in any way, a factory replacement is required (see Parts List). Wear gloves when handling damaged glass door assembly to prevent personal injury. Do not operate with the glass front removed, cracked or broken. Removal and replacement of the glass from the door **must** be done by a licensed or qualified service person. **The glass must be purchased from an ENVIRO dealer. No substitute materials are allowed.** To remove the door (see page 16). The replacement glass will come with a new gasket installed. Remove any silicone remnants from the door. Apply high temperature silicone to the two vertical faces of the door and install the new piece of glass with gasket (be sure to maintain edge clearances). Apply even pressure to the glass to allow the silicone to adhere to the gasket material.

Cleaning Decorative Surfaces:

Painted and porcelain faces should be wiped with a damp cloth periodically. If a plated face has been purchased, it should be unpacked/unwrapped carefully to avoid getting anything on the surface of the finish, including cleaners, polish and finger prints. It is important to note that fingerprints and other marks can leave a permanent stain on plated finishes. **To avoid this, give the face a quick wipe with denatured alcohol on a soft cloth BEFORE lighting the fireplace.** Never clean the face when it is hot. Do not use other cleaners as they may leave a residue, which can become permanently etched into the surface.

Safety Screen:

A safety screen is installed from the manufacture to protect its users from the dangers of the hot glass preceding it. There are four safety screen mounting brackets that hold the screen into position as shown in Figure 17. In order to remove the safety screen it is easiest to grab with both hands from the bottom and lift the screen up off the mounting brackets and outward.

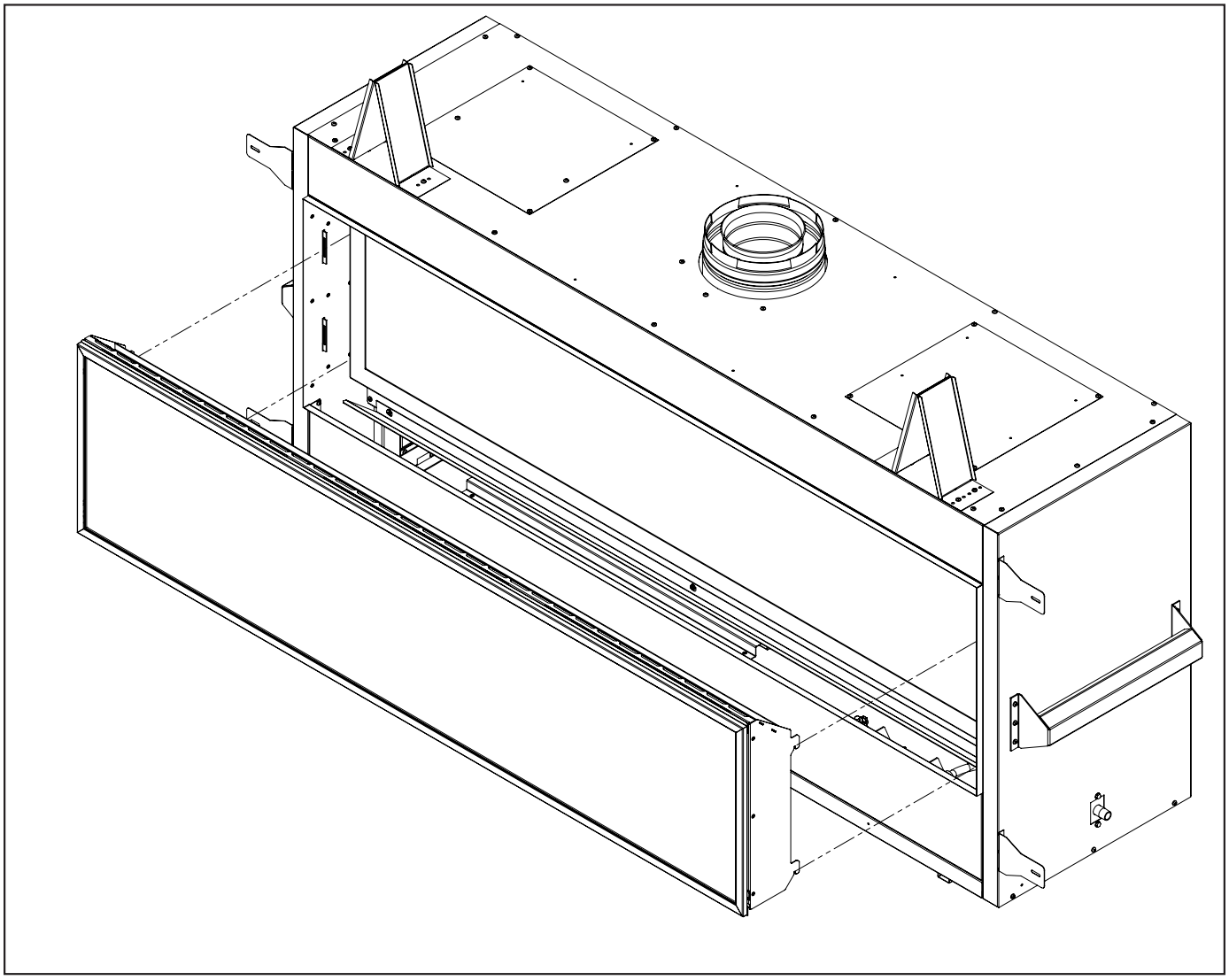

Figure 17. Safety Screen Removal

Glass Door Removal:

To remove the glass door use a 3/8 socket to remove the 4 upper bolts and rotate outward. To replace the door simply reverse the order; do not over tighten the bolts or they may strip.

WARNING: Do not touch or attempt to remove the glass door if the fireplace is not completely cold.

WARNING: Never operate the fireplace with the glass door removed.

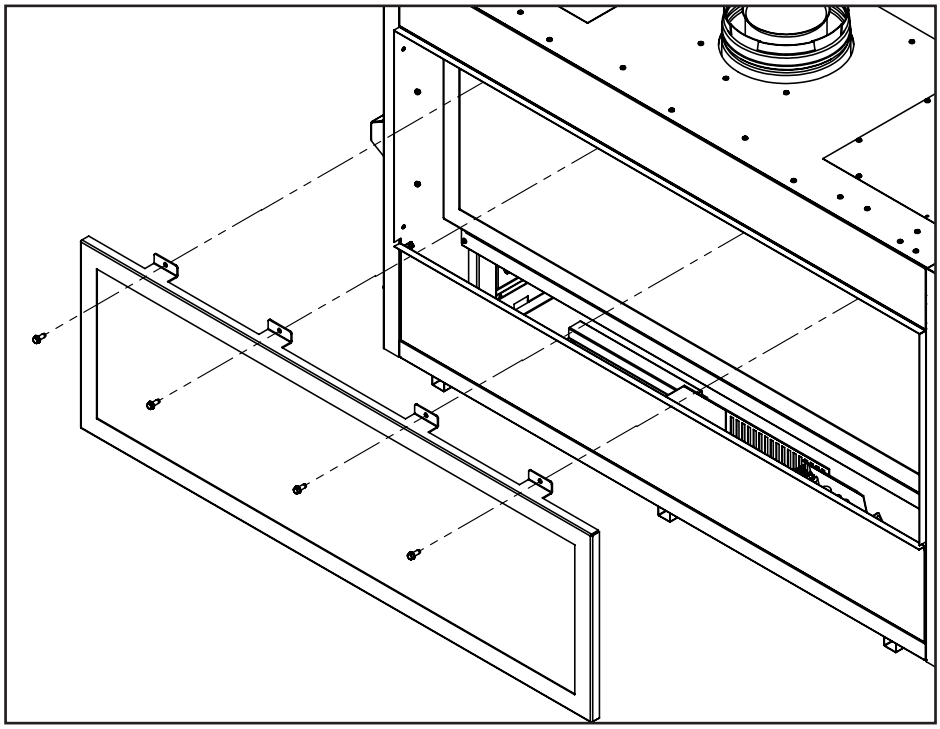

Figure 18. Door Removal Motion

Burner Removal:

The burner will need to be removed for maintenance and fuel conversion. Follow the procedure carefully. **Proceed only when the unit has completely cooled down.**

1. Remove the safety screen as shown in Maintenance and Service - Safety Screen Removal.
2. Remove the glass door as shown in the Maintenance and Service - Glass Door Removal.
3. Remove log set or high definition rock set (if installed).
4. Remove any media from the media tray.
5. Remove the media tray as shown in Secondary Installation - Media Tray Removal.
6. Remove the six T-20 screws securing the burner pan as shown in Figure 19; do NOT remove the other T-20 screws. Once the specified screws are removed slide burner to the left and lift out to remove.

To re-install the burner follow steps above in reverse. When placing the burner back in the unit be sure not to move the air shutter. **Make sure the burner is slid all the way in or the mounting holes will not line up. Do not over tighten the burner screws or they might strip; just get them snug.**

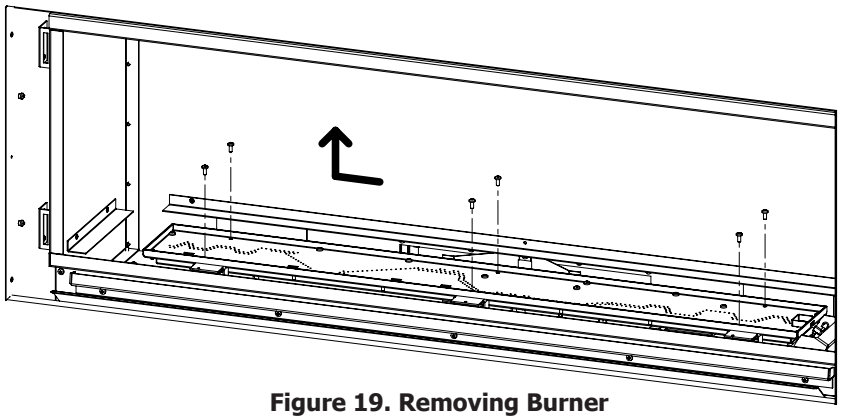

Figure 19. Removing Burner

Maintenance And Service

Access panels:

There are two access doors in the bottom on the firebox that is used for servicing components after the unit is installed in a construction enclosure. **Proceed only when the unit has completely cooled down.**

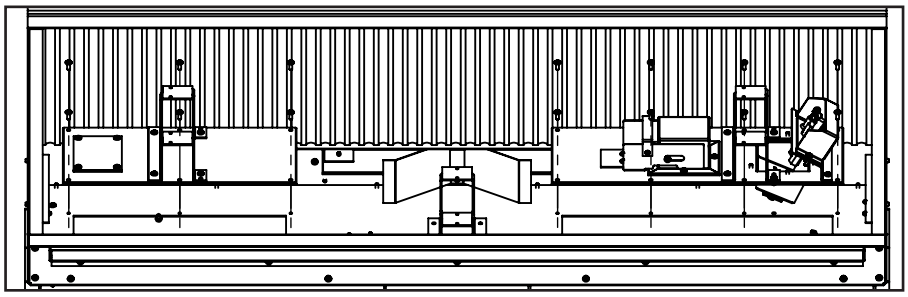

Figure 20. Removing Access Door

1. Remove the burner and burner tray as shown in the Maintenance and Service - Burner Removal.
2. Remove the (14) T-20 bolts retaining the access panels as shown in Figure 10.
3. After servicing assemble in the reverse order and be sure the gasket is still intact. Replace if necessary.

Intake Shield Removal:

You will need to remove the Intake Shield to gain access to the components below and make adjustments to the air shutter. To remove the shield simply lift it up off the slots.

DO NOT run the unit without the Intake Shield as it allows the unit to evacuate heat and protect the components.

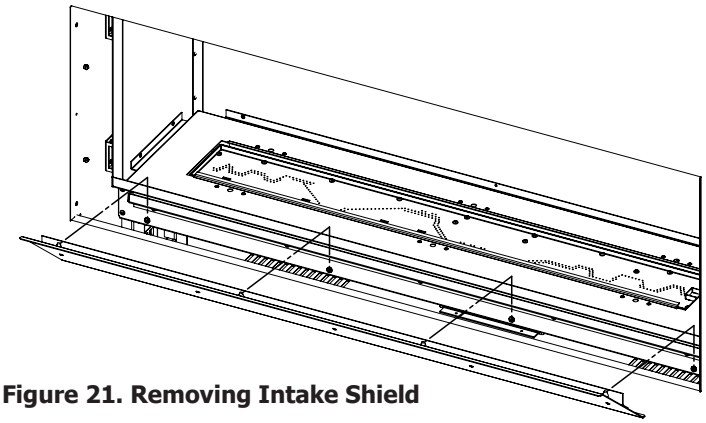

Figure 21. Removing Intake Shield

Fuel Conversion:

TO BE INSTALLED BY A QUALIFIED SERVICE AGENCY ONLY

Please read and understand these instructions before installing.

Warning: This conversion kit shall be installed by a qualified service agency in accordance with the manufacturer's instructions and all applicable codes and requirements of the authority having jurisdiction. If the information in these instructions is not followed exactly, a fire, explosion or production of carbon monoxide may result causing property damage, personal injury or loss of life. The qualified service agency is responsible for the proper installation of this kit. The installation is not proper or complete until the operation of the converted appliance is checked as specified in the manufacturer's instructions supplied with the kit.

FUEL CONVERSION:

Kit Parts List for C60I Model:

1 - Orifice (**NG** - #28 DMS or **LP** - #44 DMS)
1 - Stepper regulator with hardware
1 - Installation instruction sheet
2 - Conversion labels

Carefully inspect all parts supplied with this conversion kit. If any parts have been damaged or are missing, contact your dealer, distributor or courier company to have them replaced before starting this installation.

Conversion Kit Installation:

1. Turn the unit off by pressing the ON/OFF Key on the remote and shut off gas supply at the shut-off valve upstream of the unit. **CAUTION: The gas supply must be shut off prior to disconnecting the electrical power and before proceeding with the conversion. Allow the valve and unit to cool down to room temperature.**
2. Remove Safety Screen/Surround Panel and the glass door as shown in the MAINTENANCE AND SERVICE - GLASS DOOR REMOVAL section of this manual.
3. Carefully remove any media and logs.
4. Remove the burner as shown in the

   MAINTENANCE AND SERVICE -

   BURNER REMOVAL section of this manual.
5. Convert the pilot injector (see Figure 22):
   a) Using a $^{7}/_{16}$" wrench, turn the pilot head a $^{1}/_{4}$ turn counter-clockwise
   b) Push the slider with your finger or flat head screwdriver
      - Natural Gas is marked NAT.
      - Propane gas is marked LP with an indicating hole between L and P.
   c) Turn the pilot head a $^{1}/_{4}$ turn clockwise back to its original position to lock in place.
6. Convert the burner orifice:
   a) Remove the main burner orifice with a 3/8" deep socket
   b) Put a bead of pipe-thread sealant into the orifice mount, install oriface from kit. DO NOT OVER-TIGHTEN.
7. Convert the SIT gas valve:

a) Use a T-20 driver to remove the two screws that hold the stepper regulator to the gas valve and disconnect the wire harness from the IFC.

b) Remove the rubber regulator diaphragm that is situated between



Figure 22. Pilot Slider set to LP

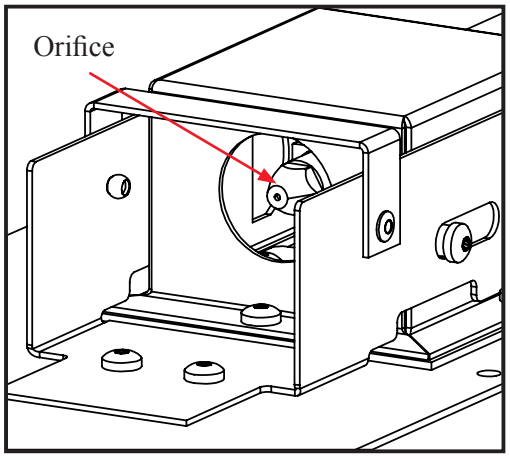

Figure 23: Orifice location

the stepper regulator and the valve body. The new stepper regulator already has this diaphragm installed.

c) Install the LP (or NG) stepper regulator, with the new longer T-20 screws included in the kit and connect the harness to the IFC.

8. Reinstall the burner, burner media, and glass door. Also refer to the Secondary Installation section in the Owner's Manual. When re-installing the burner, ensure that the burner slides all the way to the right into the venturi box. Reconnect the main gas line if it was disconnected and open the shut-off valve at the gas line to the unit.

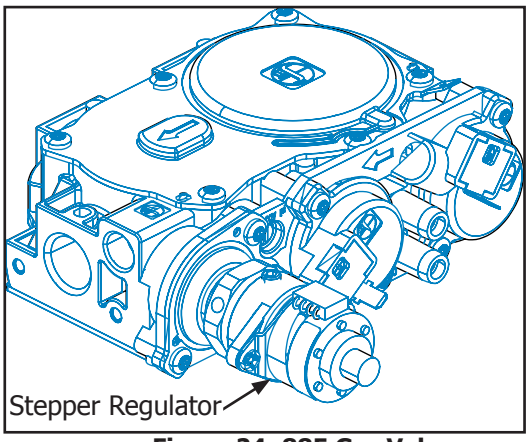

Figure 24: 885 Gas Valve

10. Reconnect the electrical power to the unit.

11. Use a small brush to apply a warm soapy water solution to all gas connections (use a half dish soap and half warm water). If a gas leak is present, bubbling will occur. Gas leaks can be repaired by using an approved pipe thread sealant or approved Teflon tape. NEVER USE AN OPEN FLAME WHEN TESTING FOR LEAKS.

12. Relight the pilot and confirm the flame properly covers the flame sensor hook (see Figure 25). Should the pilot require adjustment, turn the adjustment screw clockwise to decrease or counterclockwise to increase until the correct flame is achieved.

13. Relight the main burner in both the "HI" and "LO" positions to verify proper burner ignition, operation and proper flame appearance. Confirm the inlet and manifold pressures are within the acceptable ranges as directed in section Intial Intallation - Gas Line Connection and Testing. If the unit has been installed at an altitude higher than 2000ft (610m) it is required to de-rate the unit accordingly:

In the USA: The appliance may be installed at higher altitudes. Please refer to your American Gas Association guidelines which state: the sea level rated input of Gas Designed Appliances installed at elevations above 2000 (610 m) feet is to be reduced 4% for each 1000 feet (305 m) above sea level. Refer also to local authorities or codes which have jurisdiction in your area regarding the de-rate guidelines.

In Canada: When the appliance is installed at elevations above 4500 feet (1372 m), the certified high altitude rating shall be reduced at the rate of 4% for each additional 1000 feet (305 m).

14. MAKE SURE that the conversion label is installed on or close to the rating label to signify that the unit has been converted to a different fuel type.

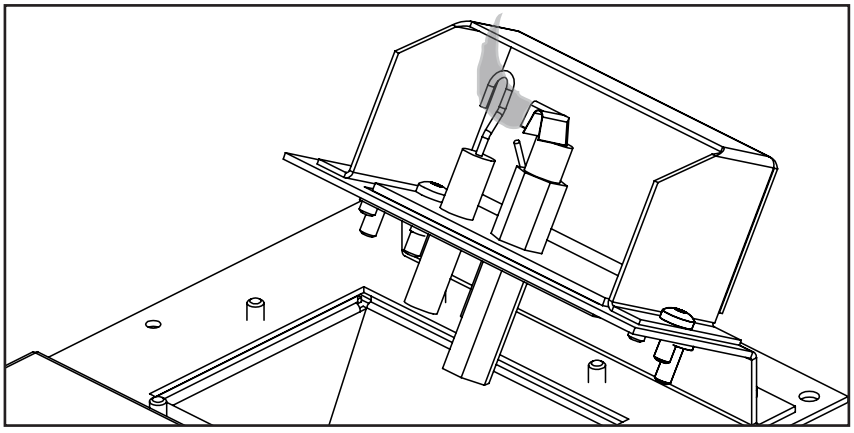
Figure 25: Flasme Sensor Coverage

Initial Installation

QUALIFIED INSTALLERS ONLY

Introduction:

This section of the owner's manual is for the use of qualified technicians only. Fireplace placement, hearths, facing, mantels, and venting terminations will be covered, as well as the gas and electric systems. There are several installation safety guidelines that must be adhered to. Please carefully read the safety precautions at the front of this manual.

- Remove the packaging from the appliance, and check to make sure there is no damage. If damage is found, please report it to both the carrier and your dealer as soon as possible.
- Locate a position where the flue system of the stove can be properly installed without damaging the integrity of the building; e.g. cutting a wall or ceiling joist.
- Check stove and flue system clearance requirements.
- Locate the stove in a postion so a gas supply line can be run to it.
- The fireplace may need an electrical connection depending on the options added.
- Locate the stove in a large and open room that is centrally located in the house. This will optimize heat circulation and comfort.
- The flow of combustion and ventilation air must not be obstructed.

Unit Install Preperation:

Take a minute to familiarize yourself with Figure 26 below.

- The top framing standoffs will need to be folded up and secured on one side with a T-20 screw, This can be seen in Figure 26.
- The side framing standoffs for this unit also double as handles for positioning and lifting.
- The nailing flanges secure the unit to the framing, these can be turned 180 to to allow for a 1/2in shallower framing depth.

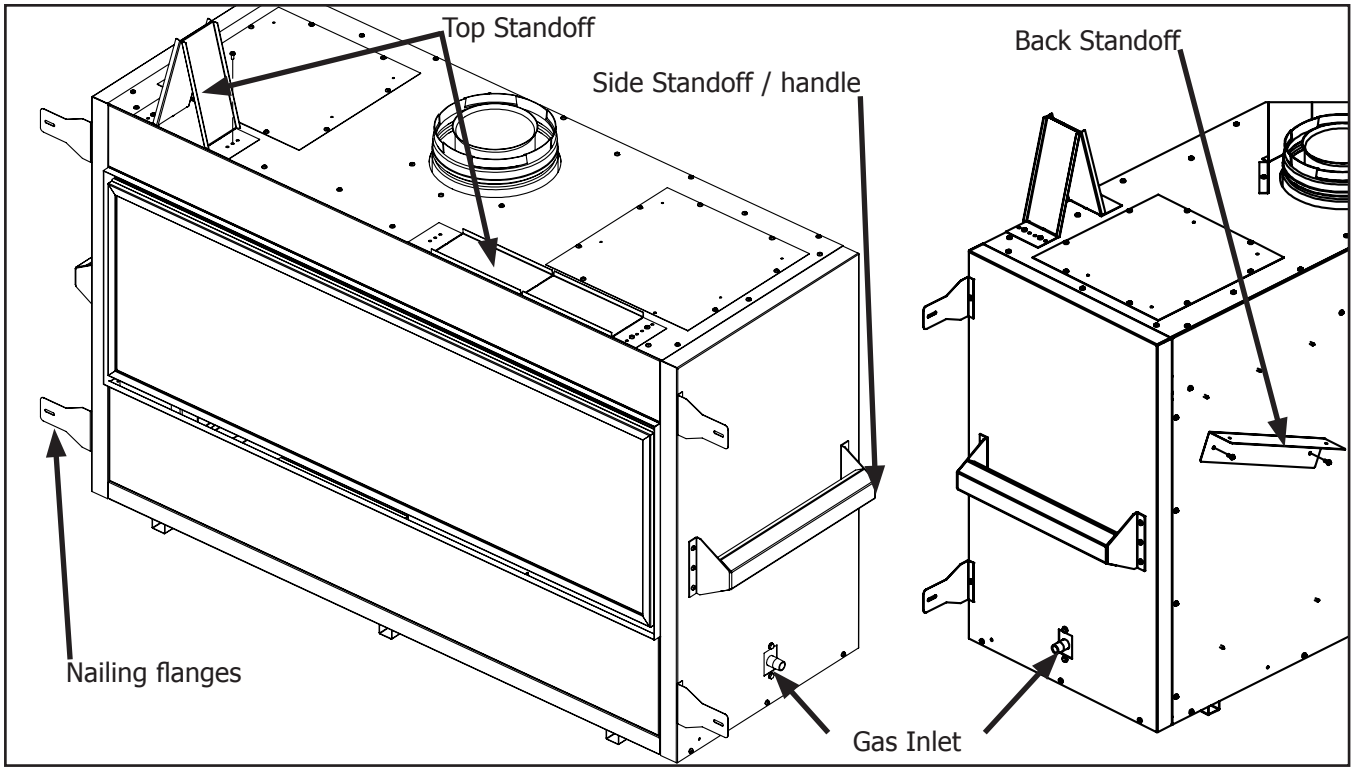

Figure 26: Fireplace Install Preperation

QUALIFIED INSTALLERS ONLY

Placement and Framing:

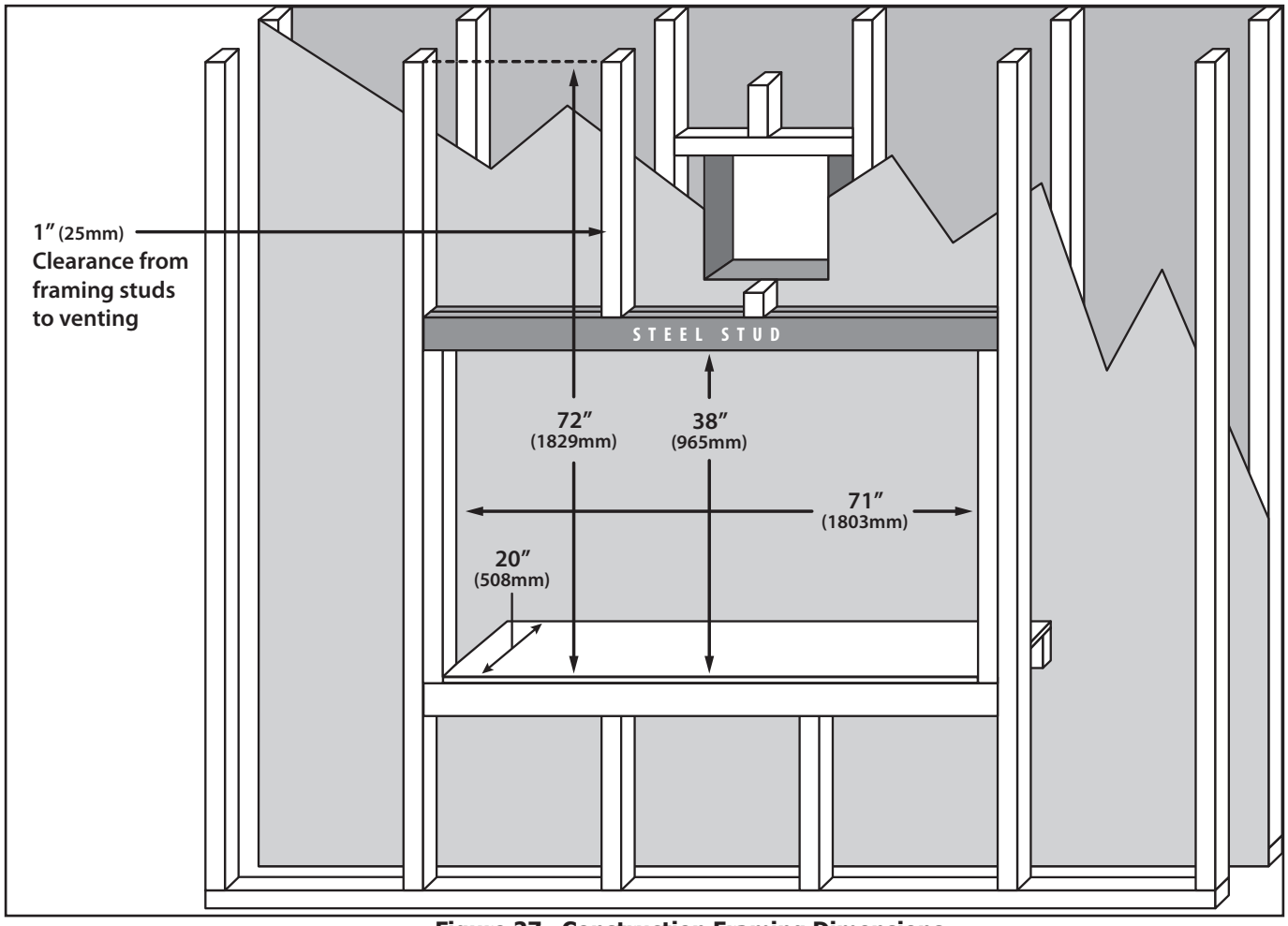

Figure 27. Construction Framing Dimensions

Table 2. Framing Dimensions.

Minimum Framing Dimensions		
Depth	20"	508mm
Width	71"	1803mm
Header Height	38"	965mm
Enclosure Ceiling	72"	1829mm

The location for the fireplace can be raised, at floor level, or installed in a corner. There are specific framing measurements for each situation. The basic rough opening should have the dimensions shown in Figure 27. The fireplace must have a strong and level surface to be placed on. The surface should be made of wood or another robust, non-combustible material.

The gas line should be run to the right side of the fireplace, there is a 3/8 Male NPT fitting to connect the gas line to. The electrical wiring should be brought to the left side if needed. The location of the fireplace should be chosen so there will be at least **36 inches (91.4 cm)** from drapes, doors and other combustibles.

QUALIFIED INSTALLERS ONLY

Alternate Gas Inlet Location:

The gas inlet location can be moved to the bottom of the cabinet if needed. This may be needed for certain installations. First remove the two screws on the left side of the unit, see Figure 28. The gas inlet assembly will now be loose in the cabinet. Disconnect the gas line coming from the gas valve, the straight fitting the gas line was connected too will be reaplaced by a elbow supplied in the manual bag. Thread the elbow into the shut off valve, use gas sealant on threads. Mount the assembly to bottom of the firebox as shown, screws come installed in firebox. Reconnect the gas line to elbow.

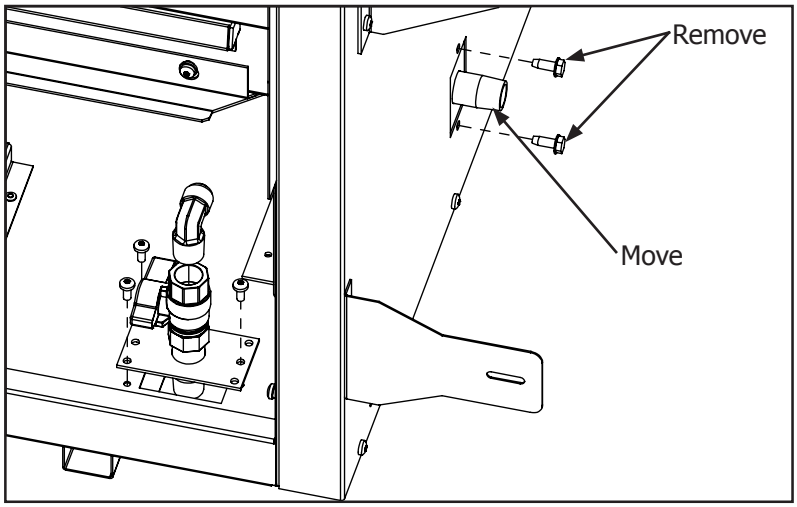

Figure 28: Alternate Gas Inlet Location

Vent Termination Framing:

Minimum venting is shown in figure 29. the framing height to the center of the thimble is 62". Minimum venting must include a 24" vertical section and a 90 degree elbow which is then terminated horizontally.

For a vertical termination please follow the vent pipe manufacturer's installation instructions for vertical vent termination framing.

A minimum of 1" (25 mm) clearance on all sides of the vertical vent pipe must be maintained.

For every 12" of horizontal run there must be a 1/4" of rise.

1" of clearance between framing and venting must be maintained at all times. 2" above the venting and 3" above an elbow.

Please see vent cap clearance in page 31. Also refer to local building and fire codes.

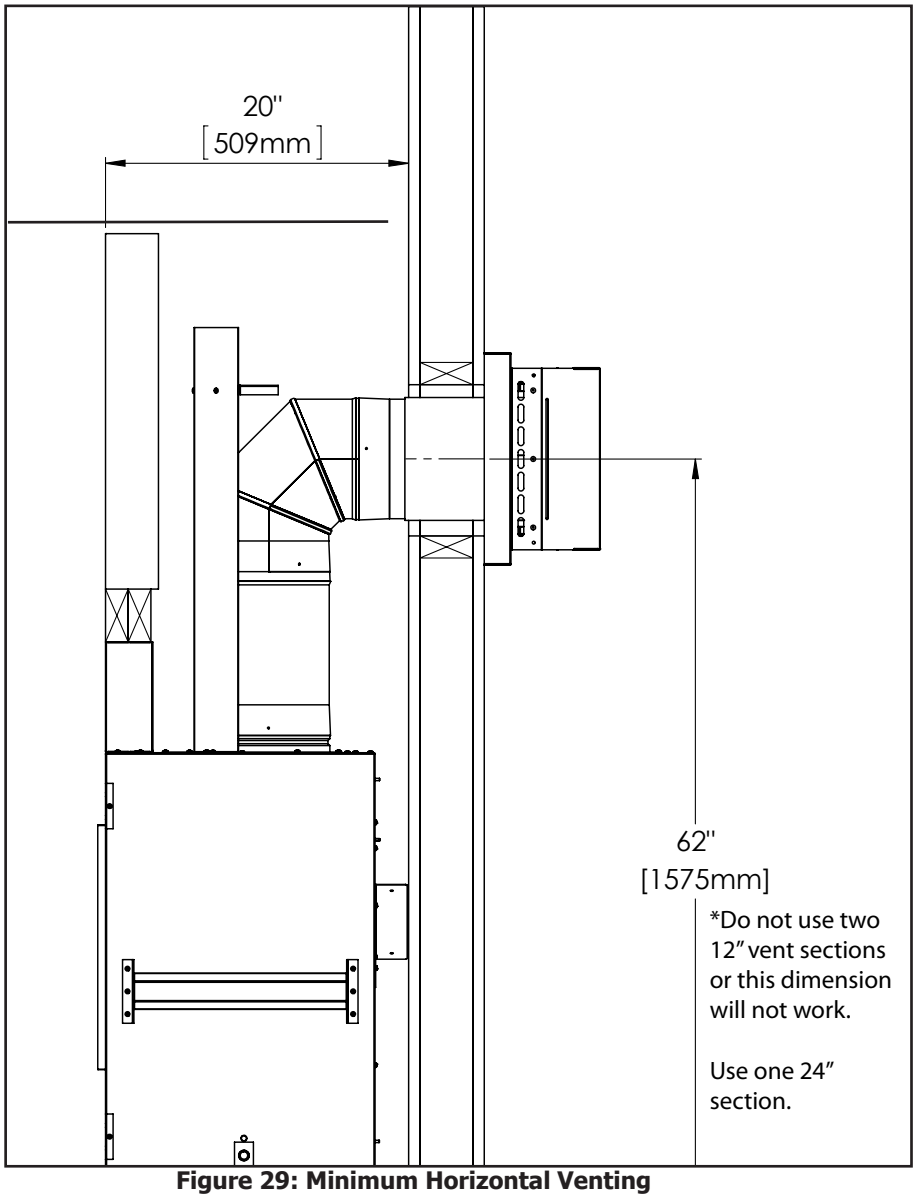

Figure 29: Minimum Horizontal Venting

QUALIFIED INSTALLERS ONLY

Floor Protection:

The C60I may be installed on a combustible floor. **If the appliance is to be installed directly on carpeting, tile, or any other combustible material other than wood, the appliance must be installed on a metal or wood panel extending the full width and depth of the appliance.**

If masonry is to be used, prepare the necessary foundation for the masonry load. When masonry construction is being used, a lintel must be used over top of fireplace to support the added weight.

Consider the height of hearth finish material (stone, brick, etc.) when building a fireplace platform. The bottom of the fireplace must be level with finished hearth.

Build the hearth to desired size and height. If a hearth extension is desired, combustible material may be used.

Above floor level installations: A solid, continuous platform must be constructed below the appliance. MINIMUM PLATFORM SIZE: 71 in. (1803 mm) wide x 20 in. (508 mm) deep.

Mantel Requirements:

Refer to Figure 30(a,b) for a combustible mantel installation, measurement is from bottom of the unit to the bottom of the mantel. See Figure 30(b) for more clarity.

If you are planning on installing a TV above the fireplace refer to page 30 to see the options available.

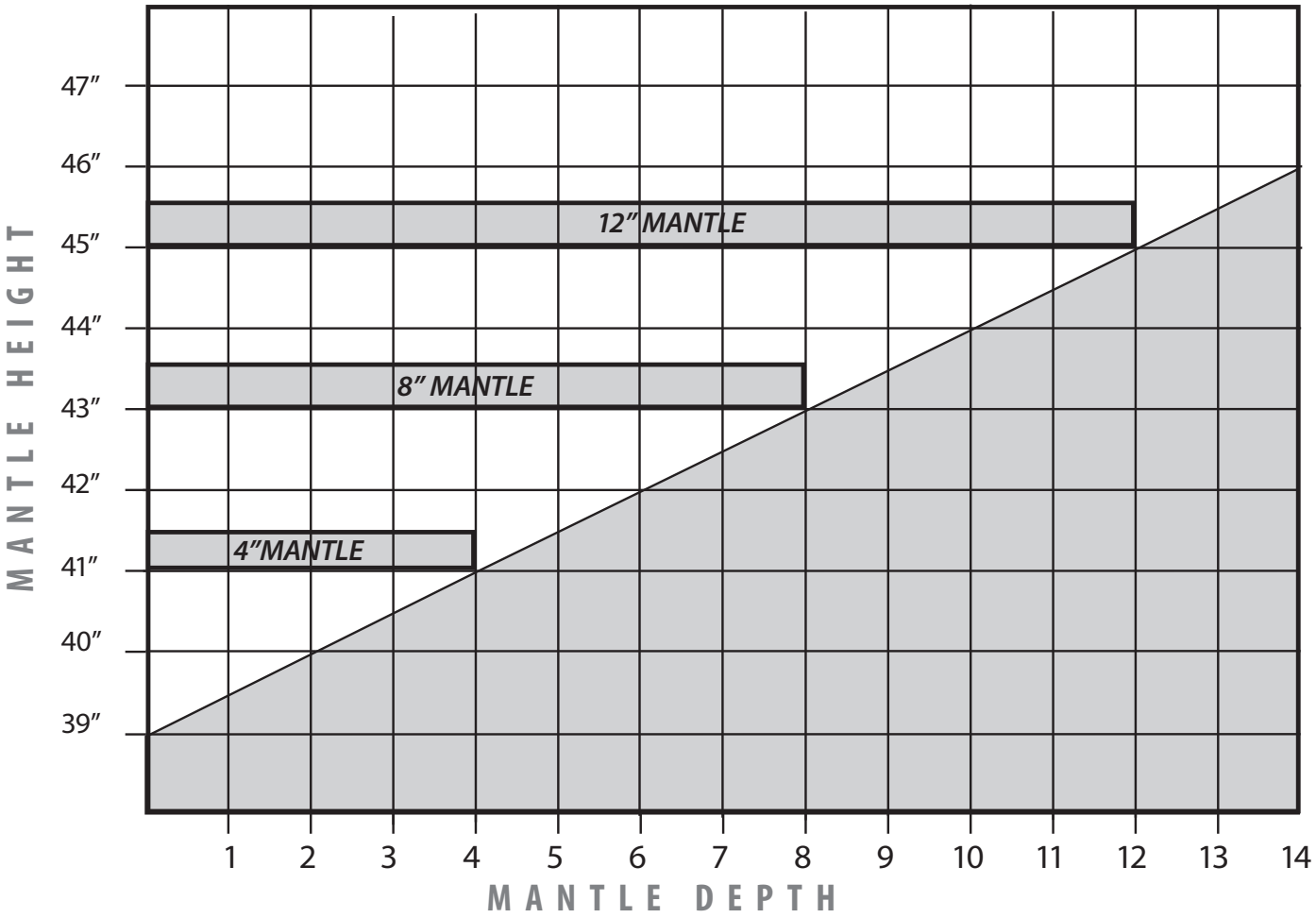

Figure 30(a): Minimum Mantel Height

QUALIFIED INSTALLERS ONLY

If adding a mantel to the C60I please note the critical dimensions shown in Figure 30(b). These are minimum dimensions as per certification and must be followed.

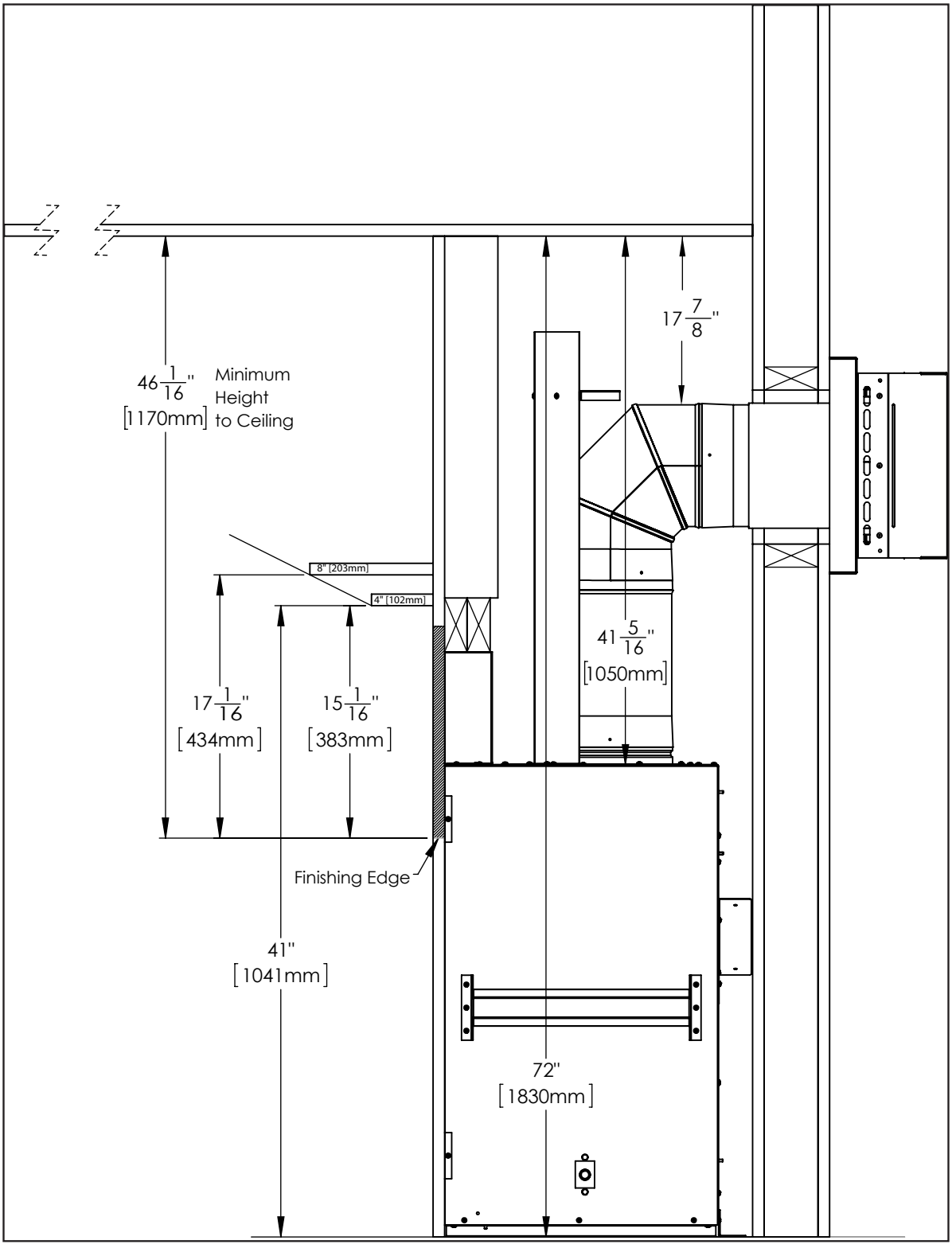

Figure 30(b): Install Dimensions with Mantel

Installation with Recess

Refer to dimensions in Figure 31 if building a recess above the fireplace. Note the dimensions from the finishing edge to the stud below the recess finishing material. The vertical finishing material at the back of the recess must be be spaced 7/8” off the vent shield. Also note the dimension from the vent pipe to the internal ceiling this must be maitainted if the fireplace is raised.

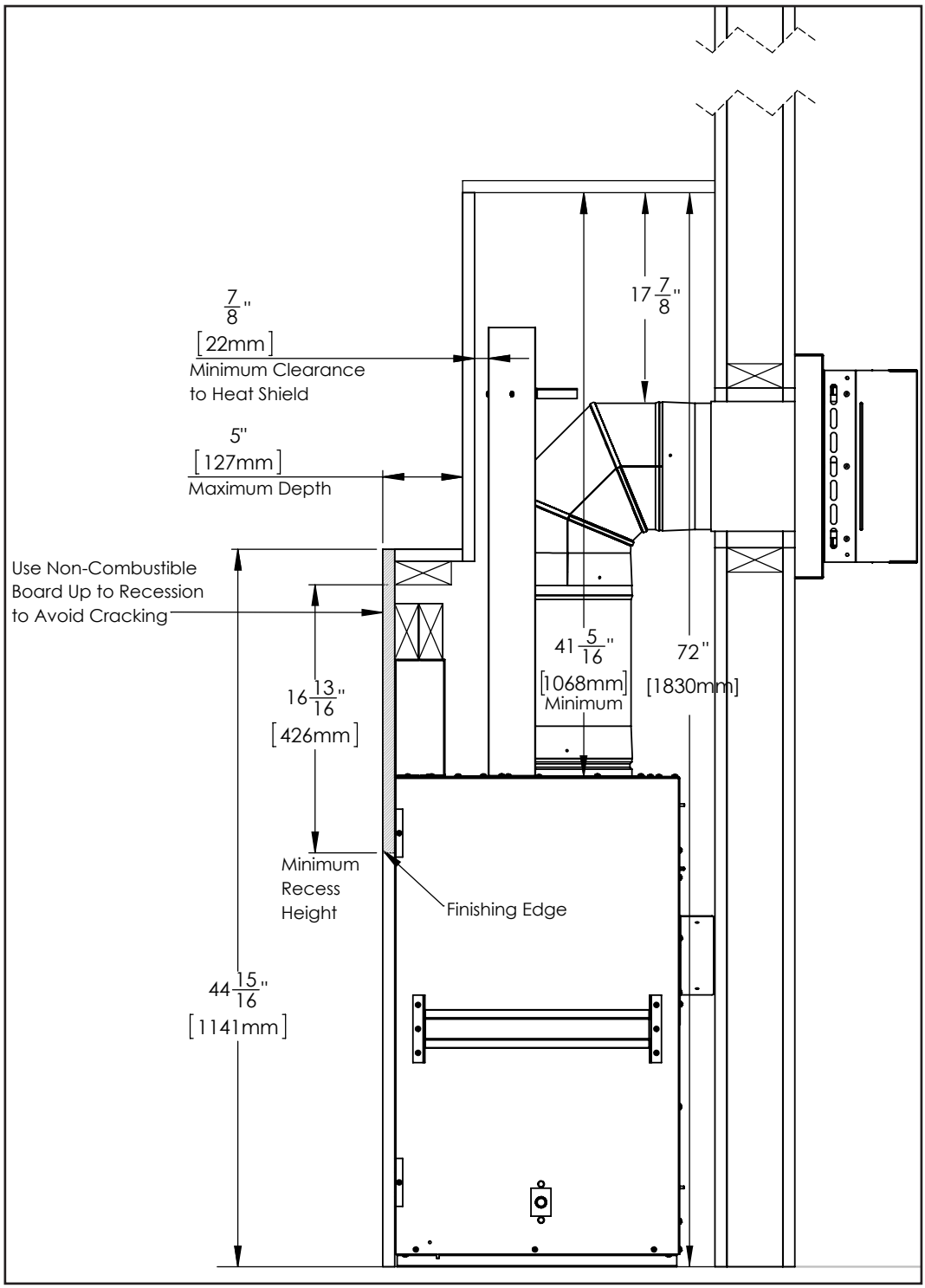

Figure 31: Install Dimensions with Recess

Corner Installation: QUALIFIED INSTALLERS ONLY

The dimensions for installing a fireplace in the corner of a room are given in Figure 32. Refer to "Installation - Allowable Co-axial Vent Configurations" for allowable pipe lengths.

Do not interfere with the structural integrity of the walls. Shown below are minimum clearances; increasing these dimensions is allowable as long as vent length remains in the allowable range. See vent graph for details.

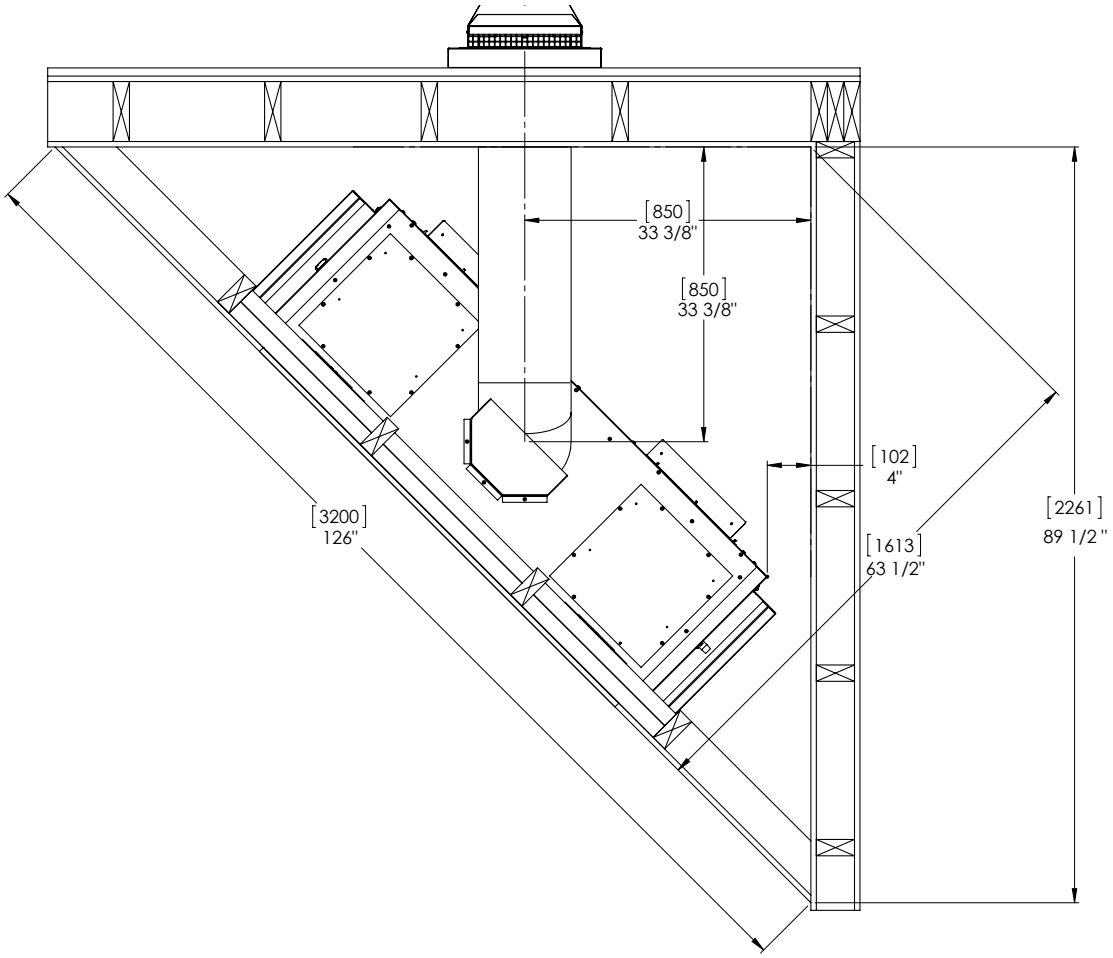

Figure 32. Dimensions for a Corner Installation

IMPORTANT: All installations must include the vertical vent shield. The horizontal vent shield is only installed if the fireplace is horizontally terminated with the minumum vertical rise of 24". If more than 24" of vertical rise is used in the vent configuration no horizonal shield is needed. See Figure 33 for shield install. Screws are pre-installed in cabinet and horizontal vent shield. Use a T-20 screwdriver or drill driver to remove screws then install shields.

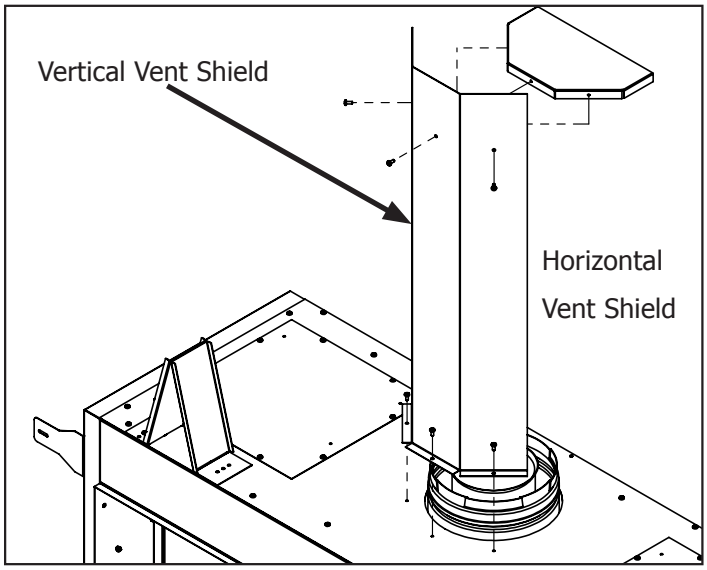

Figure 33. Vent Shielding Install

QUALIFIED INSTALLERS ONLY

Horizontal Vent install:

Figure 34(a) shows a horizontal vent installation with minimum clearances. The horizontal vent shield must be used when the minimum vent configuration is used. If more than 24" of vertical rise is used the shield should not be installed. The vent to ceiling clearance must be maintained no matter the additional vertical vent height; see figure 30(b) and 31. A minimum of 1" clearance on all sides of the vent pipe must be maintained at all time unless specifically stated.

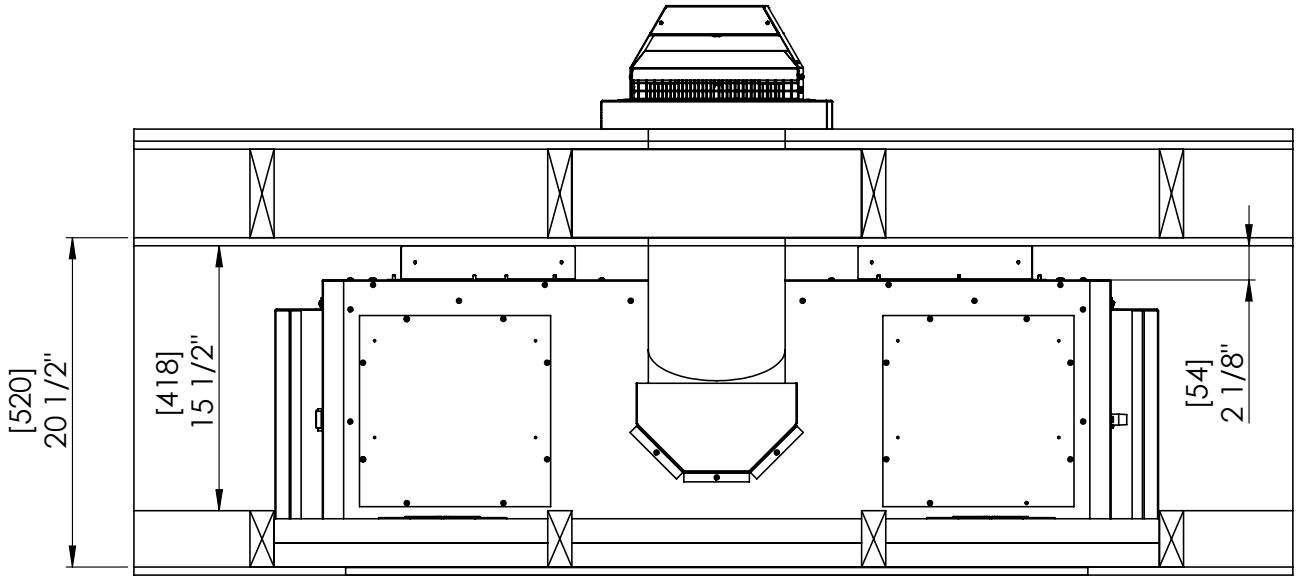

Figure 34(a). Dimensions for a Horizontal Installation

Vertical Vent install:

Figure 35(b) shows a vertical vent installation with minimum install clearances. Vertical vent shield is needed, the horizontal vent shield is not required for vertical vent configurations. A minimum of 1" clearance on all sides of the vertical vent pipe must be maintained at all time unless specifically stated. Please see Initial Installation - Vertical Termination for further details.

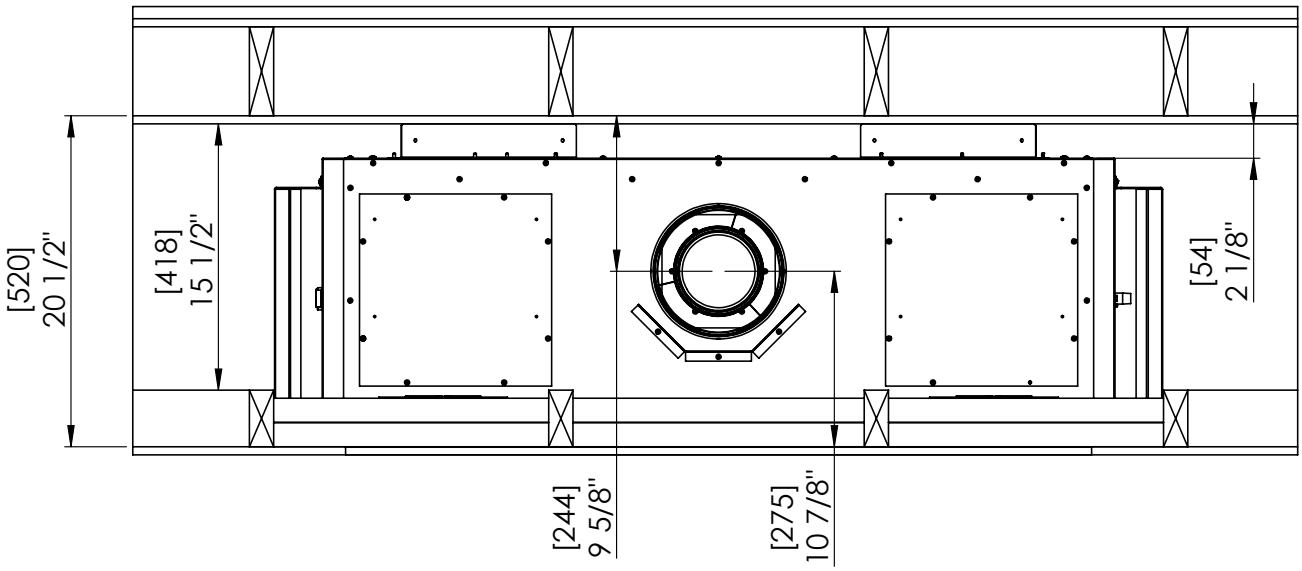

Figure 35(b). Dimensions for a Vertical Installation

QUALIFIED INSTALLERS ONLY

FLEXIBLE VENT INSTALL:

The C60 is certified to be installed with the BDM Pro-Form Flexible Direct Venting system.

Important Information:

Flex venting clearance to combustibles is 1" standard, 3" above an elbow.

Minimum Vent Height 62" from bottom of unit.

Vertical terminations installations cannot have any bends in the flexible venting.

Maximum Vertical Run is 30ft (9m).

Do not bend flex venting over 90°.

A vinyl siding stand off must be used for terminations on a vinyl exterior wall.

This fireplace must not be connected to a chimney flu servicing another type of appliance.

Vertical Installation:

Refer to Direct Vent vertical installation procedures.

Horizontal Installation:

1. Install thimble into framing.
2. Gently stretch flex vent if needed, then insert through thimble to exterior.
3. Termination for the horizontal kits comes already secured to the flex venting, do not detach! Feed venting through thimble from the exterior.
4. Secure the termination to exterior wall using the supplied screws.
5. Before attaching other end of venting to the fireplace or antoher section of venting apply liberal bead of pipe sealant to the outer collar.
6. Slide the Venting onto the collar and secure with supplied screws.

BDM Pro-Form Flexible Direct Vent Parts

Horizontal Kits :

5ft - 94218505

10ft - 94218510

Vertical Parts:

Vertical Round Termination Cap - 940285

5" x 8" Flex 5' - 94528505

5" x 8" Flex 10' - 94528510

5" x 8" Universal Wall Thimble - 949085U

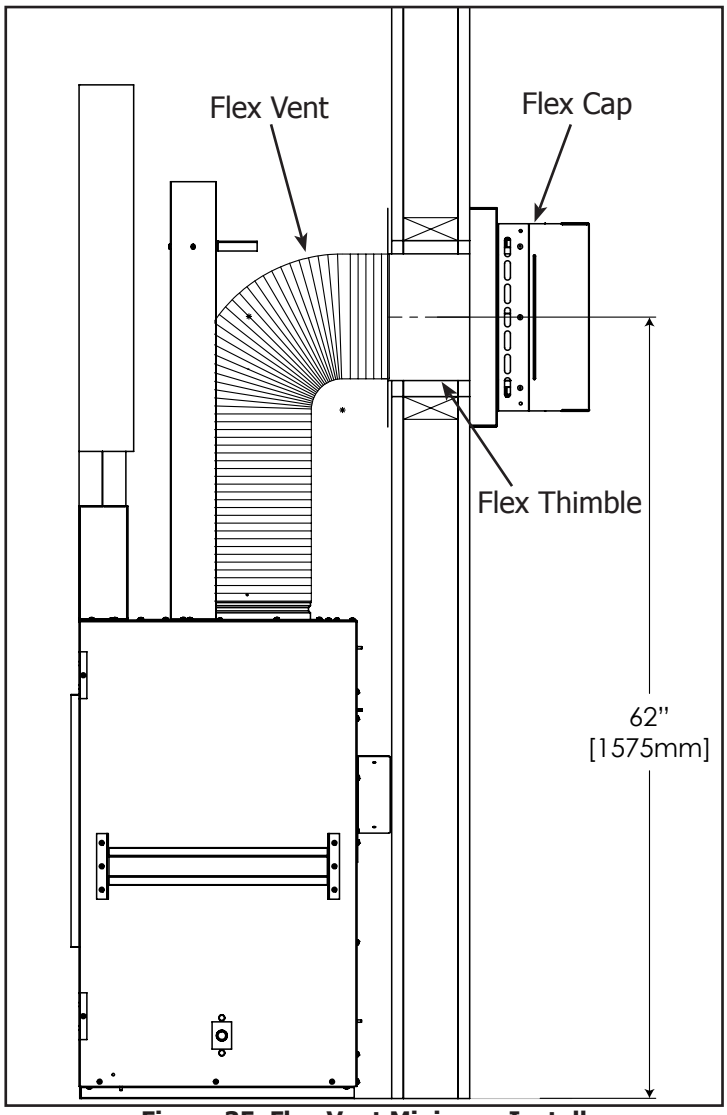

Figure 35. Flex Vent Minimum Install

QUALIFIED INSTALLERS ONLY

Clearances & Non-Combustible :

When installing the C60I as a zero clearance fireplace the correct clearances and materials must be used:

Above Unit: A minimum **13 3/4" (350mm)** of non-combustible facing material must be used above the firebox opening.

In Front of Unit: The C60I can be placed on a combustible floor if desired. The unit cannot sit directly on combustible flooring other than wood.

Adjacent/Sidewall: A minimum of **5 3/16" (132mm)** of non-combustible facing materials must be used of the side of the firebox opening above the bottom edge openeing. There must be a minimum distance of **7" (229mm)** from the finishing edge of the C60I to an adjacent wall composed of combustible material.

Mantle: It is not necessary to install a mantle, but if one is desired the guidelines as shown in Figure 30(a,b). The minimum clearance from the side of a mantle to wall is 4".

Floor: There must be a minimum distance of **10" (254mm)** from the bottom finishing edge of the C60I to a floor composed of combustible material.

Cracking: The most common area of cracking is along the horizontal cement board/drywall transition; placing this transition further away from the heat will help prevent cracks. If you have concerns of excessive finishing wall temperature follow one of these options to minimize the possibility of cracking:

1. Install the optional heat distribution kit (50-3213).
2. Install concrete board higher than the minimum specified dimension.
3. Add a decorative tile trim over the drywall transition area.

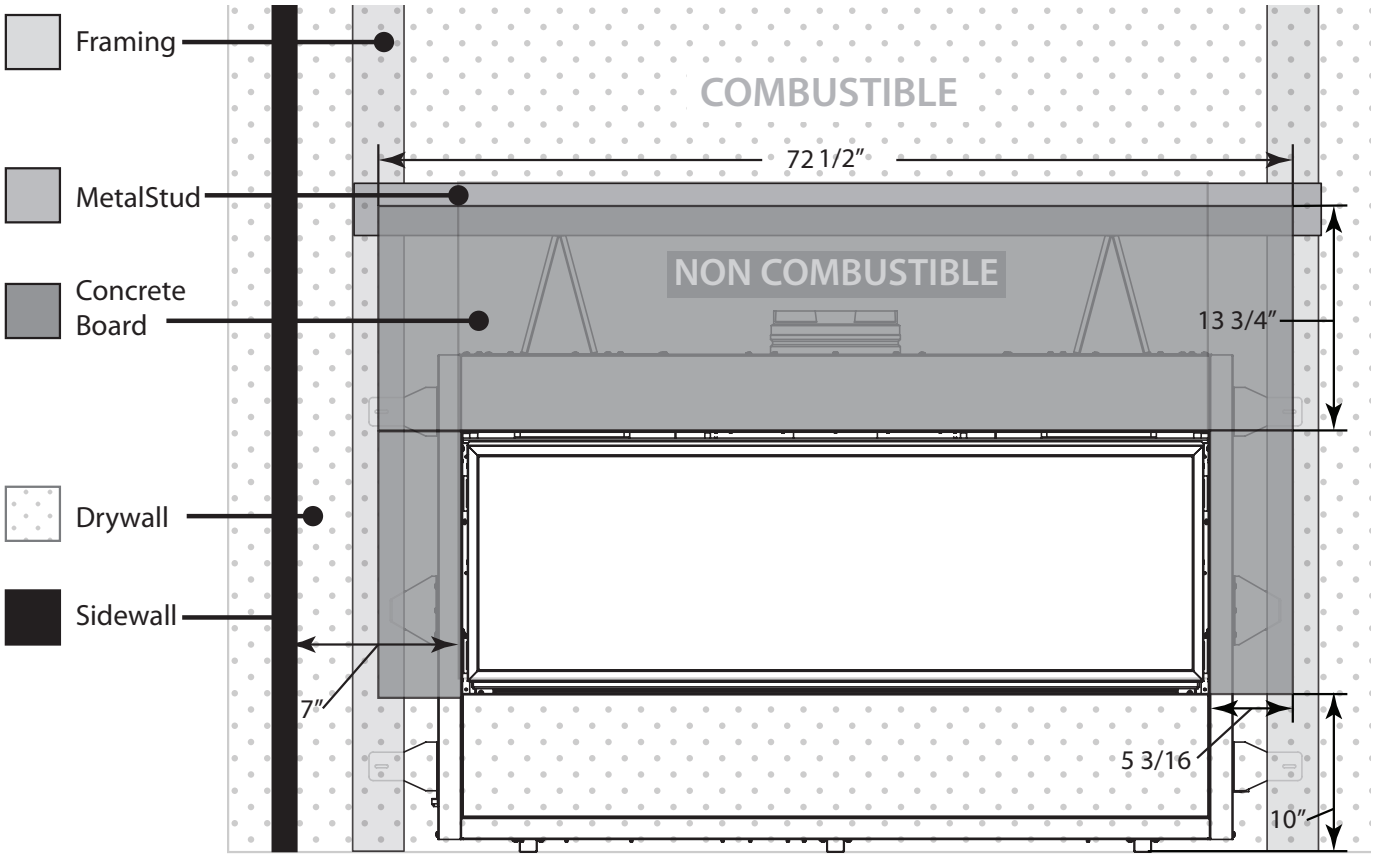

Figure 36. Finishing Non-Combustible Zone

QUALIFIED INSTALLERS ONLY

TV Installation Considerations:

If you are planning to mount a TV above your fireplace some considerations must be made to ensure it is protected from the heat. A recess, mantel, or a combination of both will be needed in order to keep the heat away from the TV. To insure protection of electronics and art above the fireplace the Heat Distribution / TV kit option is available (50-3395), this reduces wall temperatures greatly while still providing heating.

During testing temperatures did not exceed 150°F (65°C) in a 5" deep recess. There is no guarantee that these temperatures will not harm the longevity of your TV. Make sure to consult your TV manufacture's specifications to find the maximum allowable operating temperature. Since every home and installation is unique, temperatures should be verified at the time of install if possible. A TV should not be installed if temperatures exceed the manufacturers maximum allowable temperature.

See Figure 37 and 38 for minimum TV installation clearances. Make sure there is 2" of clearance around the sides and top of the TV to allow for airflow. Remember these are **minimum** dimensions increasing them can only help reduce the temperature the TV is subjected too.

If installing with a mantel to protect the TV please see figure 37 for clearances, it is highly recommended to use at least a 8" mantel. The **minimum** distance from the base of the unit to the bottom of the TV would be 45.75".

If a recessed installation is desired please see figure 38 for TV clearances. The recess will need to protrude from the wall for proper protection, this dimension is dependant on the TV and TV mounting bracket depth. The **minimum** distance from the base of the unit to the bottom of the TV would be 47.00".

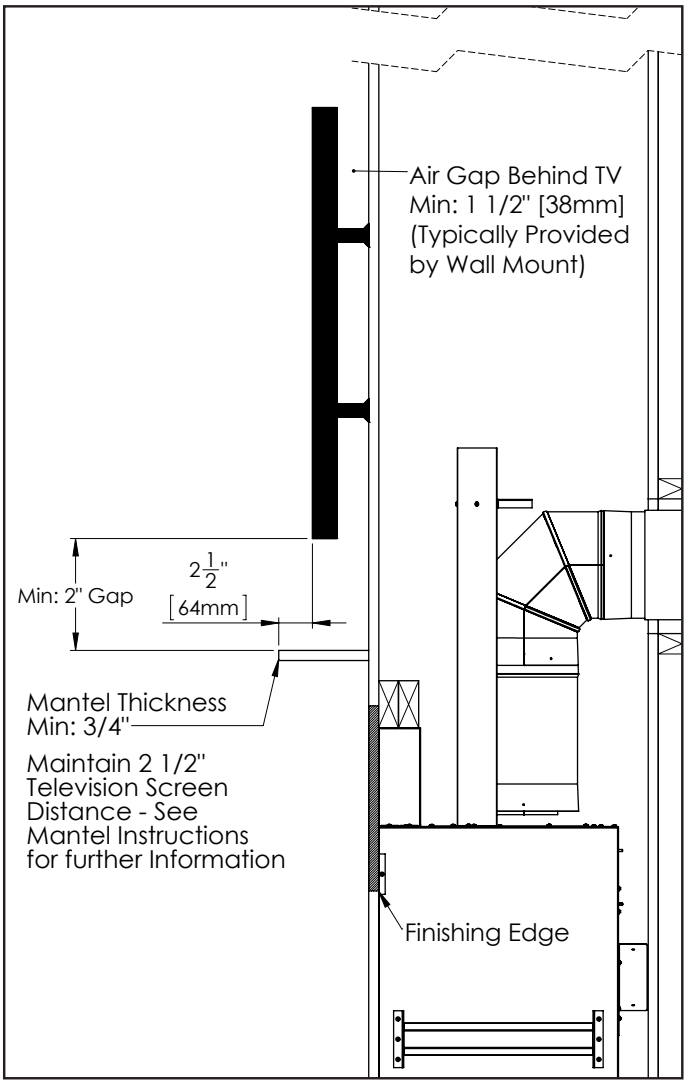

Figure 37. Minimum TV Install Clearances

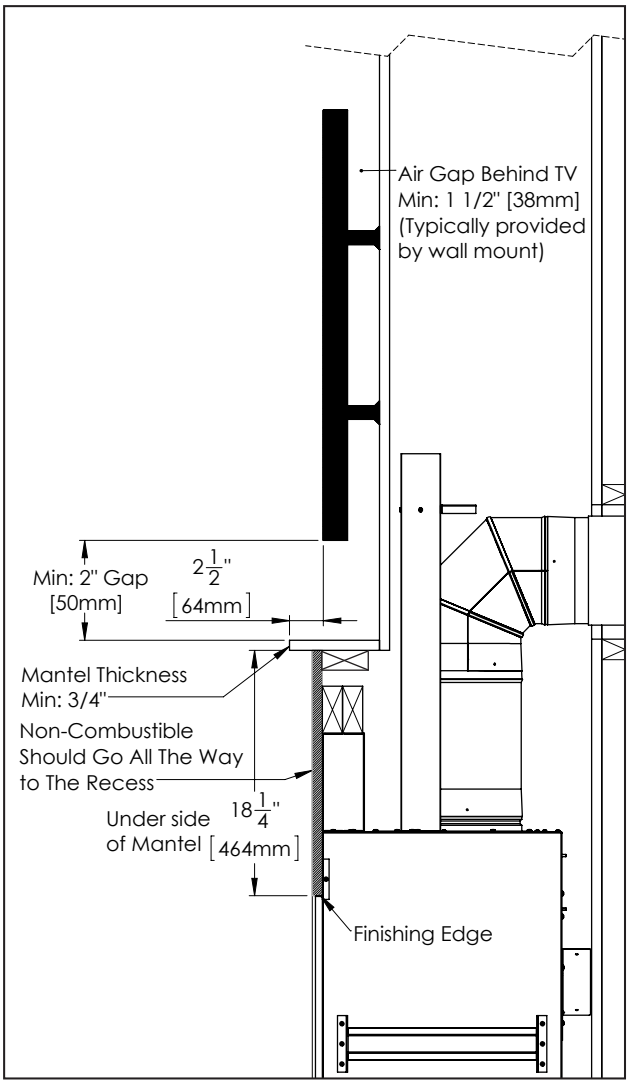

Figure 38. Recess Minimum TV Install Clearances

Direct Vent:

WARNING: This appliance has been designed to draw room air and discharge heated air from the openings around the finishing edge. Blocking or modifying these openings in any way can create hazardous situations. Only Approved Direct Vent may be used for installation of the C60I.

The minimum vent installation for the C60I must include a **24" vertical section and 90° elbow before being horizontally vented. Maximum vertical venting is 40' (12.2 m).** This model is vented with co-axial **5"** exhaust, **8"** intake aluminum or stainless steel approved rigid vent leading into a vertical or horizontal termination cap. The flue collar of this model will fit inside of a standard **5"**x **8"** vent and must be either correctly interlocked or fastened, with three screws directly to the vent collar.

Check periodically that the vents are unrestricted. Also ensure that all direct vent pipes have been properly sealed and installed after routine inspection or cleaning. The air intake and exhaust pipes must be installed in the correct locations on the top of the C60I.

Vent Termination Restrictions:

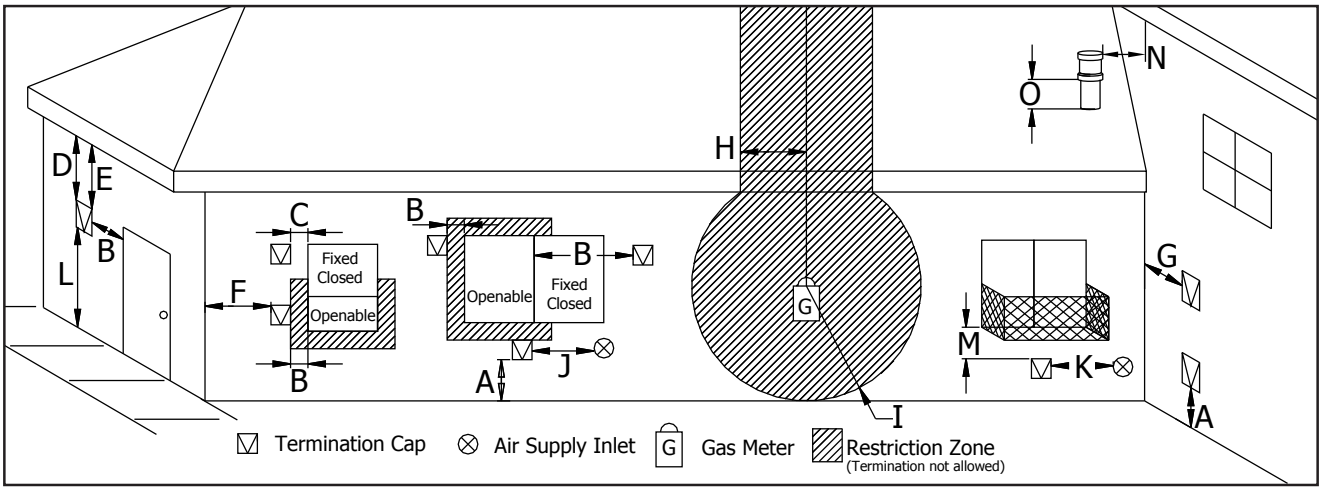

Figure 39. Vent Termination Restrictions, refer to Table 2

Table 3: Vent Termination Clearances

Letter	Canadian Installation [1]	US Installation[2]	Description
A	12 in (30 cm)		Clearance above grade, verandah, porch, deck, or balcony.
B	12 in (30 cm)	9 in (23 cm)	Clearance from window or door that may be opened.
C	12 in (30 cm)*		Clearance from permanently closed window (to prevent condensation).
D	24 in (60 cm)*		Vertical clearance to ventilated soffit located above the terminal, within a horizontal distance of 2 ft (60 cm) from center line of terminal.
E	18 in (45 cm)*		Clearance to unventilated soffit.
F	12 in (30 cm)*		Clearance to outside corner.
G	12 in (30 cm)*		Clearance to inside corner.
H	3 ft (91 cm) within a height of 15 ft (4.5 m) above the meter/ regulator assembly	3 ft (91 cm) within a height of 15 ft (4.5 m) above the meter/ regulator assembly*	Clearance to each side of center line extended above meter/regulator assembly.
I	3 ft (91 cm)	3 ft (91 cm)*	Radial clearance around service regulator vent outlet.

J	12 in (30 cm)	9 in (23 cm)	Clearance to non-mechanical air supply inlet to building, or the combustion air inlet to any other appliance.
K	6 ft (1.83 m)	3 ft (91 cm) above if within 10 ft (3 m) horizontally	Clearance to mechanical air supply inlet.
L	7 ft (2.13 m)t	7 ft (2.13 m)*t	Clearance above paved sidewalk or paved driveway located on public property.
M	12 in / 30 cm+	12 in / 30 cm*+	Clearance under verandah, porch, deck, or balcony.
N	12 in (30 cm)*		Clearance horizontally to any surface (such as an exterior wall) for vertical terminations.
O	12 in (30 cm)		Clearance above roof line for vertical terminations.

1 In accordance with the current CSA B149.1, Natural Gas and Propane Installation Code.
2 In accordance with the current ANSI Z223.1 NFPA 54, National Fuel Gas Code.
* These numbers are only estimates.
t A vent shall not terminate directly above a side walk or paved driveway that is located between two single family dwellings and it serves both dwellings.
+ Permitted only if verandah, porch, deck, or balcony is fully open on a minimum of two sides beneath the floor.

Clearances are in accordance with local installation codes and the requirements of the gas supplier.

NOTE: Venting terminals shall not be recessed into walls or siding.

VENTING CLEARANCES:

A **1" (25 mm)** clearance to combustibles must be maintained around any vertical vent pipe. Around a horizontal vent pipe, the clearance to combustibles should be **2" (51 mm)** above and **1" (25 mm)** on the sides and bottom. When combustible materials are directly above a 90° elbow, **3" (76 mm)** of clearance is necessary.

Table 4. Vent Pipe Minimum Clearances

	Vertical Pipe to the Side Walls	Horizontal Pipe to the Sides & Bottom	Above an Elbow Above the Unit	Above an Elbow Not Above the Unit	Above Horizontal Vent Pipe	Wall Frame 8" (203mm) or less
Hard Pipe	1" (25.4 mm)	1" (25.4 mm)	3" (76.2 mm)	3" (76.2 mm)	2" (51 mm)	Thimble Specific

See certified thimbles in venting section and frame accordingly (see Figure 40) will assure the proper support and spacing for the vent pipe as it passes through the wall. Installations in Canada require that a wall thimble be used for passing through walls and ceilings. All sealing and vapour barriers must comply with local building codes.

The configuration of the venting pipes depends on the locations of walls, ceilings, and studs. However, the pipes cannot be of arbitrary length and arrangement. Because the length of the vertical and horizontal sections dramatically affects the burning efficiency of the fireplace, certain guidelines have been set in INITIAL INSTALLATION - ALLOWABLE CO-AXIAL VENT CONFIGURATIONS. Venting terminals can not be recessed into a wall or siding.

WARNING: This gas appliance must not be connected to a chimney flue serving a separate solid-burning appliances.

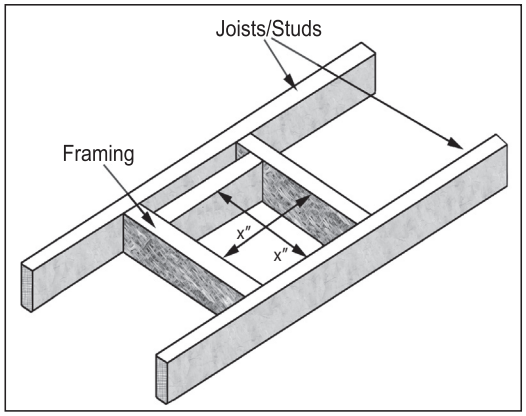

Figure 40. Vent Framing For Wall or Ceiling

QUALIFIED INSTALLERS ONLY

Approved Venting Parts:

Table 5: Approved Vent Manufacturers

Manufacturer	Trade Name	Nominal Sizes
ICC	EXCELDirect	5" - 8"
M&G Dura-Vent	Direct Vent Pro	5" - 8"
Selkirk	DIRECT-TEMP	5" - 8"
Selkirk	AMP DV	5" - 8"

The C60I fireplace has been tested and certified for use with M&G DuraVent DirectVent Pro, ICC EXCEL Direct, Selkirk DIRECT-TEMP, and Selkirk AMP DV venting systems. Refer to the table below for part numbers of commonly used parts for both venting systems. For more venting parts please visit the respective manufacturers' website.

WARNING: Do not mix parts from different vent manufacturers' systems.

EXCEPTION TO WARNING: This product has been evaluated by Intertek for using a DirectVent Pro starting collar in conjunction with EXCELDirect venting systems. Use of this system with the DirectVent Pro starting collar is deemed acceptable and does not affect the Intertek listing of the appliance.

Table 6: Vent part numbers (Must state if galvanized or black wanted, PART NUMBERS)

Direct Vent Pro	EXCELDirect	DIRECT-TEMP	AMP DV	Description
58DVA-06	5DL6	5DT-06		6" pipe length
			5D7	7" pipe length
58DVA-09	5DL9	5DT-09		9" pipe length
58DVA-12	5DL1	5DT-12	5D2	12" pipe length
58DVA-18		5DT-18		18" pipe length
58DVA-24	5DL2	5DT-24		24" pipe length
58DVA-36	5DL3	5DT-36	5D3	36" pipe length
58DVA-48	5DL4	5DT-48	5D4	48" pipe length
58DVA-60				60" pipe length
58DVA-E30				30° elbow, black
58DVA-E45	5DE45	5DT-EL45	5D45L	45° elbow, black
58DVA-E90	5DE90	5DT-EL90	5D90L	90° elbow, black
58DVA-VSS, DVA-BVS	VSS	5DT-VS, VSK	5DHVS, DVSK	Vinyl siding standoff/sheild
58DVA-WT, 58DVA-WTU	5WT	5DT-WT	5DWT	Wall thimble
58DVA-SC	SQSC, SC	5DT-SC	5DSC	Storm collar
58DVA-WFS		5DT-FS		Wall Fire stop
58DVA-FS	5CS	5DT-FS	5DFSP	Ceiling Fire stop
58DVA-IS	5AS	5DT-AIS	5DAIS12, AIS36	Attic Insulation Shield
58DVA-WS	5WS	5DT-WS/B	5DWS	Wall strap/support/band
58DVA-VCH	5SVT	5DT-VT	5DVC	High wind vertical termination
58DVA-17TA				11" to 17" pipe, adjustable
58DVA-24TA				17" to 24" pipe, adjustable
	5DLA30			16.5" to 29" pipe , adjustable
	5DLS1			1 7/8" to 9" slip length pipe
	5DLS2			1 7/8" to 21" slip length pipe
58DVA-F6	6EFA	5DT-AF6	5DF	Flashing, 0/12 to 6/12 roof pitch
58DVA-F12	6EFB	5DT-AF12	5DF12	Flashing, 7/12 to 12/12 roof pitch
58DVA-FF	6EF			Flat Roof Flashings
58DVA-CFK	4MF			Masonary Flashing

QUALIFIED INSTALLERS ONLY

ALLOWABLE CO-AXIAL VENT CONFIGURATIONS:

Figure 41 shows the range of venting options using either vertical or horizontal terminations; any layout that remains within the shaded area is acceptable. Having the fewest number of elbows is ideal as they tend to restrict air movement. The total length of horizontal vent pipe can not exceed 20 feet (6.1m) and the total vent length can not exceed 40ft (12.2m). Any combination of rise and run can be used as long as it lays within the shaded area (a total of three (3) 90˚ elbows or six (6) 45˚ elbows can be used). In addition to what is shown, if a 90˚ elbow is used in the horizontal plane, 3 feet (91.4cm) must be subtracted from the allowable horizontal run (for each 45˚ elbow, 1½ feet (45.7cm) must be subtracted).

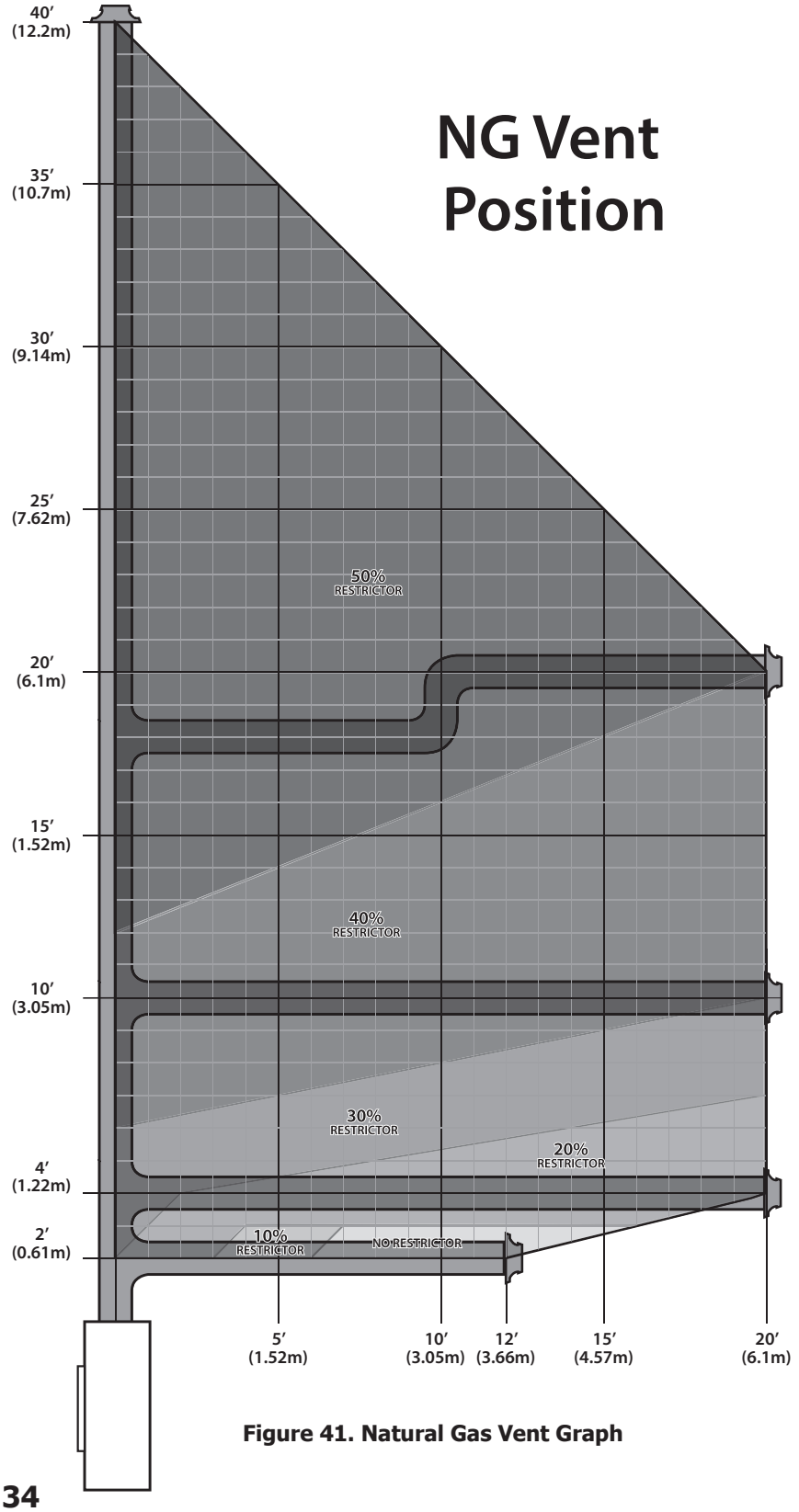

Figure 41. Natural Gas Vent Graph

Note: The unit will come with 6 restrictor rings. One of these rings may be needed depending on the vent configuration. This must be installed in order to achieve proper efficiency and flame appearence.

Flame Appearence: Pin point on the graph where your vent configuration will lay. Remember to consider elbows in the HORIZONTAL plane account for horizontal distance as stated above. Use the corresponding exhaust restrictor accorinding to the graph. See the following section in this manual for installation details. Your climate and altitude may alter what restrictor is required for your particular application.

If your flame is low, flickery, and more blue then increase the restrictor one size. If your flame is tall, thin, and lazy then decrease the restrictor one size. Use your judgement after the unit has been running for about 20 minutes.

Caution: Wait until the unit has completely cooled before changing the restrictor.

QUALIFIED INSTALLERS ONLY

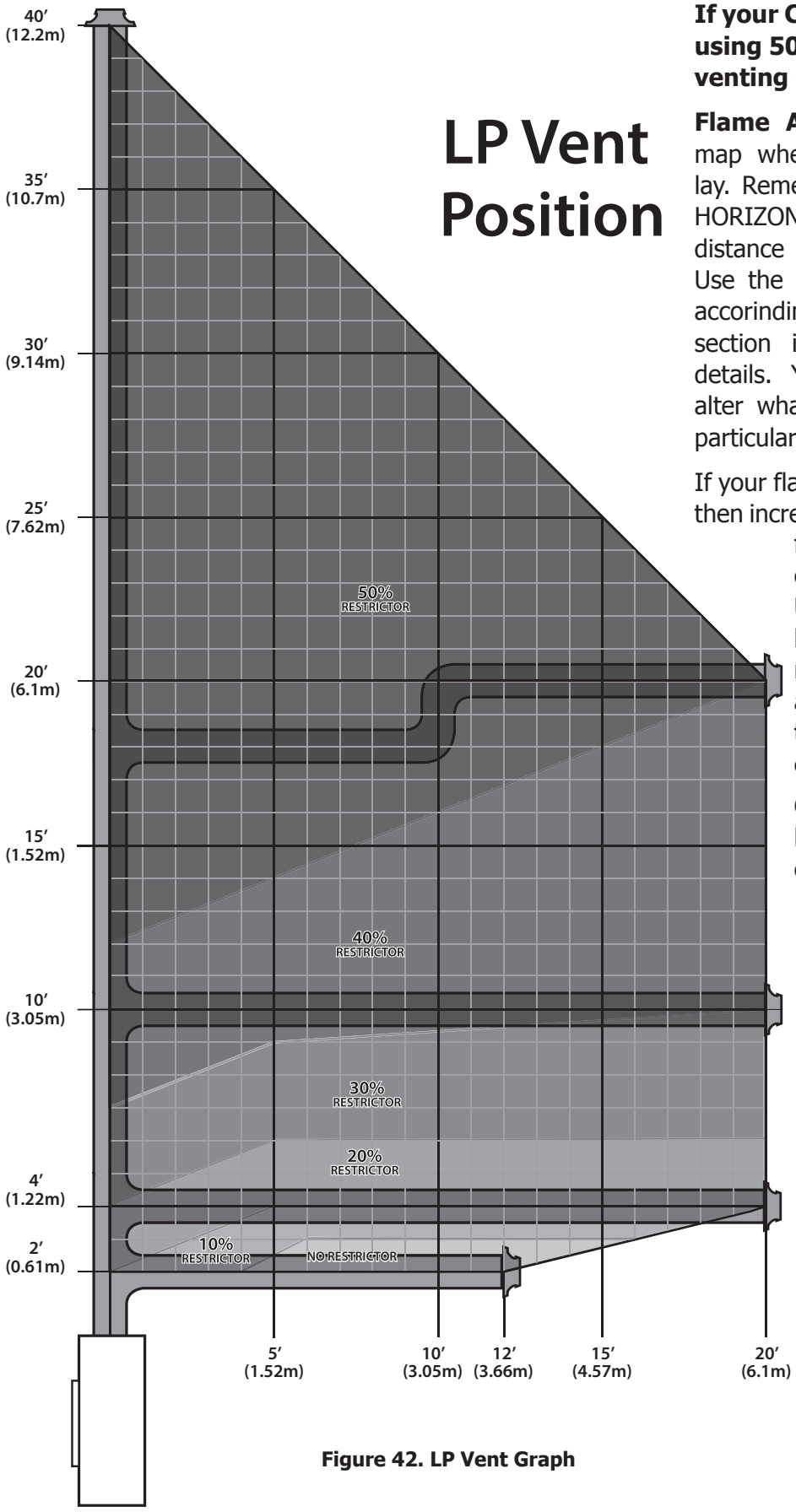

Figure 42. LP Vent Graph

If your C60I has been converted to LP using 50-3345 conversion kit use this venting diagram.

Flame Appearence: Pin point on the map where your vent configuration will lay. Remember to consider elbows in the HORIZONTAL plane account for horizontal distance as stated on the previous page. Use the corresponding exhaust restrictor accorinding to the graph. See the following section in this manual for installation details. Your climate and altitude may alter what restrictor is required for your particular application.

If your flame is low, flickery, and more blue then increase the restrictor one size. If your flame is tall, thin, and lazy then decrease the restrictor one size. Use your judgement after the unit has been running for about 20 minutes. If your having difficulty achieving a healthy flame with LP then try opening the air shutter completely.

Caution: Wait until the unit has completely cooled before changing the restrictor.

QUALIFIED INSTALLERS ONLY

Exhaust Restrictor Setting:

When installing the C60I it may be necessary to add a restrictor in the firebox to control the combustion and flame appearance. the exhaust restrictor ring kit is included in the manual bag, to install the exhaust restrictor the safety screen assembly and glass door must be removed, see the Maintenance and Service section [Page 15, 16, and 17]. There are six different restrictor sizes, make sure you install the correct size. See figure 41 & 42 for possible vent configurations and the corresponding restrictor setting. Proper Install is crucial to a efficient fireplace burn and the best possible looking flame.

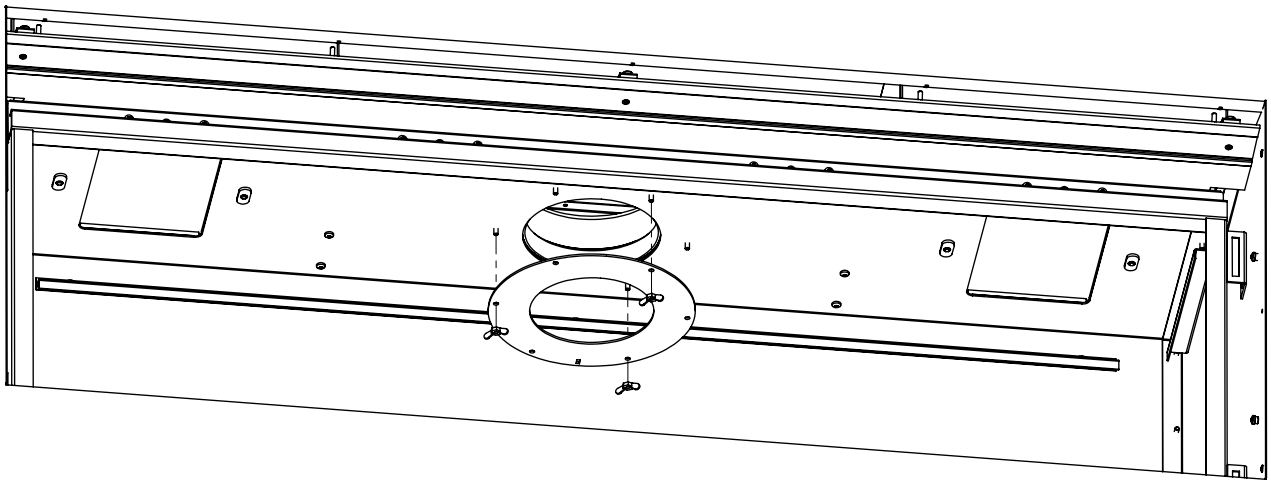

Figure 43. Restrictor Install

Note: There are six different restrictor sizes, they are marked with retangular holes which coincide with the percentage of restriction (Figure 44).

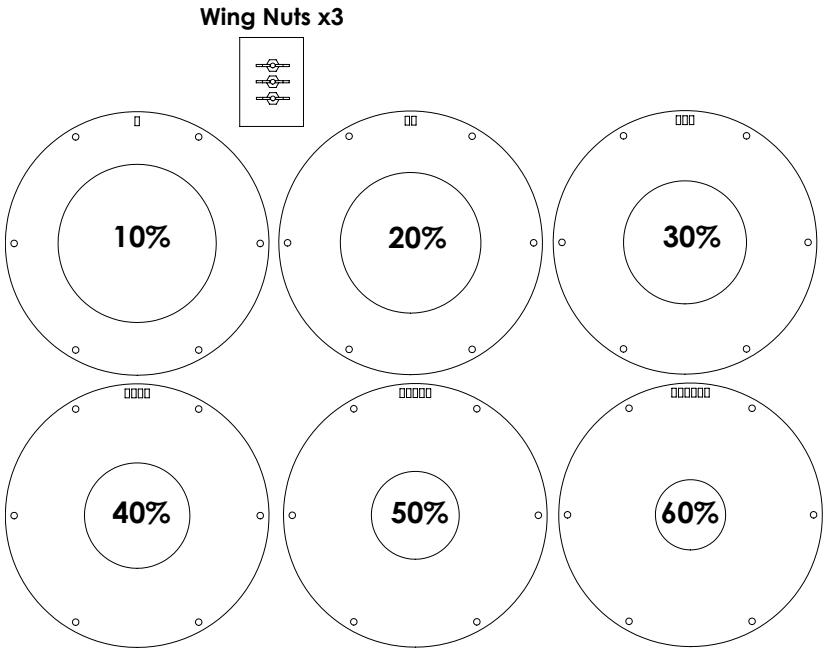

Figure 44. Restrictor Ring Kit

Horizontal Termination:

1. **A MINIMUM OF 24" [610mm] VERTICAL RISE PLUS AN ELBOW IS REQUIRED WHEN HORIZONTALLY TERMINATING WITH AN APPROVED VENT CAP.**
2. **Horizontal pipes must not be level. For every 12" (305 mm) of horizontal travel (away from the stove), there should be at least ¼" (6.4 mm) of vertical rise. Never allow the vent to run downward, as this could cause high temperatures or even present the possibility of a fire.**
3. The exterior of the horizontal vent termination must not be blocked or obstructed.
4. If the vent termination is not being attached to wood, the four wood screws provided should be replaced with material appropriate fasteners.
5. For buildings with vinyl siding, a vinyl standoff should be installed between the vent cap and the exterior wall. Attach the vinyl siding standoff to the horizontal termination. Note that the termination bolts onto the flat portion of the standoff, providing an air space between the wall and the vent termination. The air gap prevents excessive heat from possibly melting the vinyl siding.

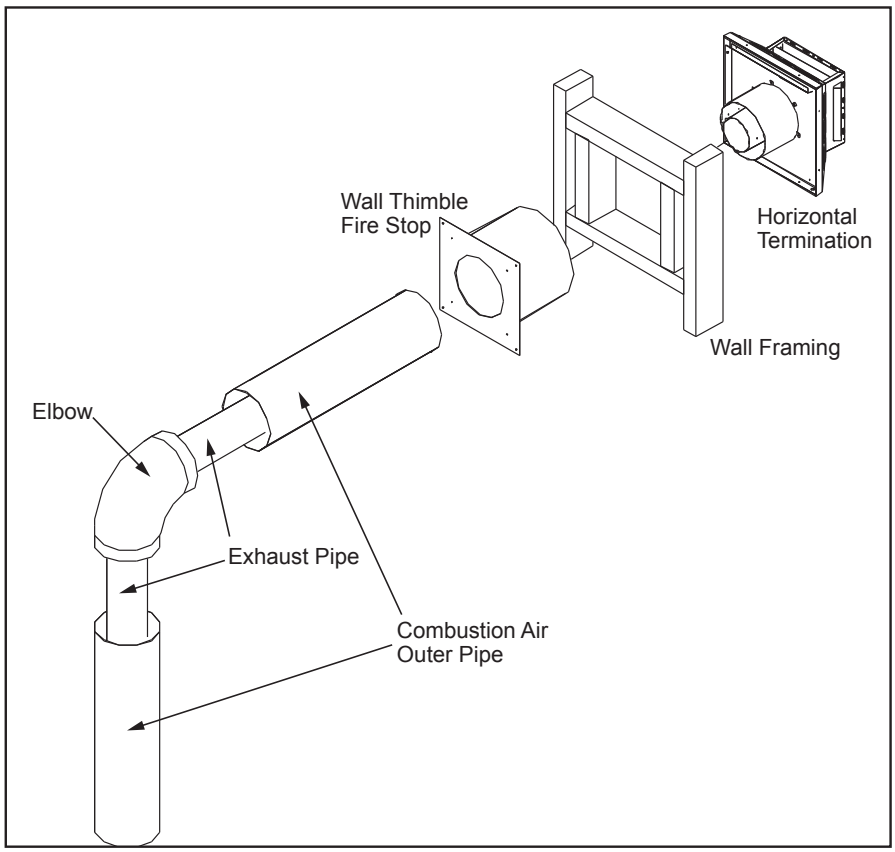

Figure 45. Horizontal Vent Termination

6. Horizontal pipes must be supported every **3' (914 mm)**. Plumber's all round strap will suffice.
7. When running horizontal pipe, clearances to combustibles must be maintained **1 inch (25 mm)** sides, **1 inch (25 mm)** bottom, and **2" (51 mm)** top.

Step 1. Set the fireplace in the desired location. Check to determine if wall studs will be in the way when the venting system is attached. If this is the case, the location of the fireplace may have to be adjusted or the venting may have to be offset.

Step 2. Direct vent pipe sections are designed with special twist-lock connections. Dry fit the desired combination of pipe and elbows to the appliance adaptor.

Step 3. With the pipe in the correct position and attached to the fireplace, mark the wall for a hole as directed by specified wall thimble dimensions. Cut and frame the hole in the exterior wall where the vent will be terminated. If the wall being penetrated is made of a non-combustible material (i.e. masonry or concrete) a **8 1/2" (21.6 cm)** hole is acceptable.

Step 4. With the hole now framed, the wall thimble installed, and the pipe extending into the wall, proceed to the outside. Attach the termination to the pipe using RTV and Mil-Pac or Rutland No 78 Stove and Gasket Cement to seal joints. The vent pipe must extend into the vent cap at least **1¼ inches (3.2 cm)**. Secure the connection between the vent cap and the pipe by attaching the two (2) sheet metal straps, which extend from the vent cap assembly to the outer wall of the vent pipe. Bend any remaining portion of the strap back towards the vent cap. Security Secure Vent uses a twist lock cap.

Step 5. Position the horizontal vent termination in the center of the **10" (25.4 cm)** square hole and attach to the exterior wall with the four screws provided. The arrow on the vent termination should be pointing up. Run a bead of non-hardening mastic around the edges of the vent cap, to make a seal with the wall. Ensure the proper clearances to combustibles have been maintained.

VERTICAL TERMINATION:

Step 1. Check the instructions for required clearances (air spaces) to combustibles when passing through ceilings, walls, roofs, enclosures, attic rafters, or other nearby combustible surfaces. Do not pack air spaces with insulation.

Step 2. Set the gas appliance in the desired location. Drop a plumb bob down from the ceiling to the position of the appliance flue exit, and mark the location where the vent will penetrate the ceiling. Drill a small hole at this point. Next, drop a plumb bob from the roof to the hole previously drilled in the ceiling, mark the spot where the vent will penetrate the roof. Determine if ceiling joists, roof rafters, or other framing will obstruct the venting system. You may wish to relocate the appliance, or to offset, to avoid cutting load bearing members.

Step 3. To install the Round Support Box/Wall Thimble in a flat ceiling, cut a **10 " (25.4 cm)** square hole in the ceiling, centered in the hole drilled in Step 2. Frame the hole as shown in Figure 26.

Step 4. Assemble the desired lengths of black pipe and elbows necessary to reach from the appliance adapter up through the Round Support Box. Insure that all pipe and elbow connections are in their fully twist-locked position.

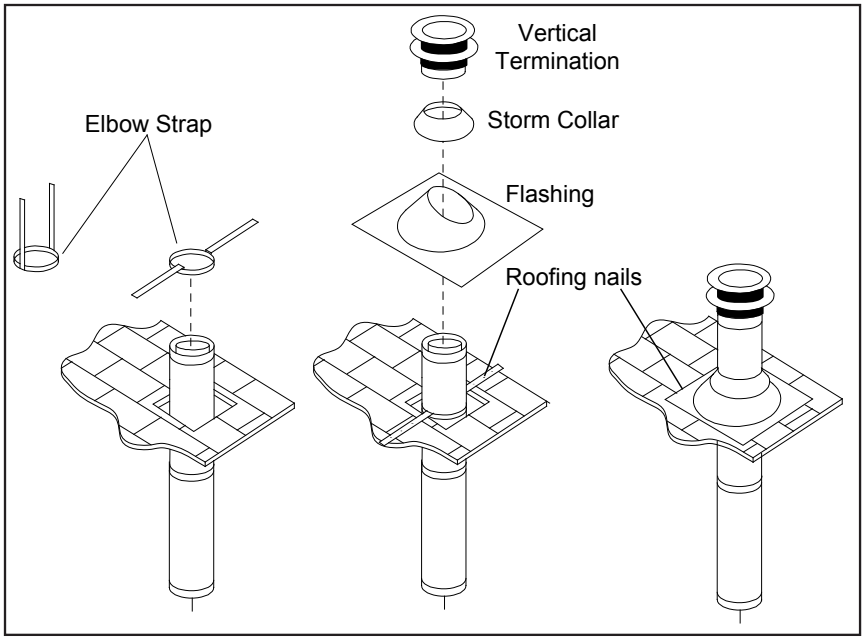

Figure 46. Vertical Vent Termination

QUALIFIED INSTALLERS ONLY

Step 5. Cut hole in the roof centered on the small hole placed in the roof from Step 2. The hole should be of sufficient size to meet minimum requirements for Clearance to Combustibles, as specified. Continue to assemble lengths of pipe and elbows necessary to reach from the ceiling support box up through the roof line. Galvanized pipe and elbows may be utilized in the attic, as well as above the roof line. The galvanized finish is desirable above the roof line, due to the higher corrosion resistance.

Step 6. Once the pipe sections have been joined, and run up through the hole in the roof, slip an elbow strap over the exposed sections, bend the support straps outwards, and push the elbow strap down to the roof level, as shown in Figure 26. Tighten the clamp around the pipe section. Use a level to make sure the pipe is truly vertical. With roofing nails, secure the support straps to the roof. Seal the nails holes heads with non-hardening mastic. Trim the excess length of the support straps that extend out beyond the edge of the flashing.

Step 7. Slip the flashing over the pipe section protruding through the roof. Secure the base of the flashing to the roof with roofing nails. Use a non-hardening sealant between the uphill edge of the flashing and the roof. Insure the roofing material overlaps the top edge of the flashing. Verify that you have at least the minimum clearance to combustibles at the roof line.

Step 8. Continue to add pipe sections until the height of the vent cap meets the minimum code requirements. Refer to Figure 47 and Table 7. Note that for steep roof pitches, the vent height must be increased. In high wind conditions, nearby trees, adjoining roof lines, steep pitched roofs, and other similar factors can result in poor draft, or down drafting. In these cases, increasing the vent height may solve the problem.

Step 9. Slip the storm collar over the pipe, and push it down to the top of the roof flashing as shown in Figure 46. Use the non-hardening sealant around the joint between the pipe and the storm collar.

Step 10. Twist-lock the vent cap.

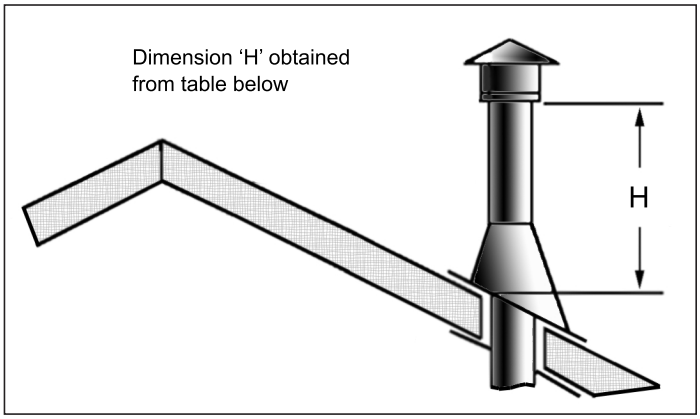

Figure 47: Height of Vertical Termination; Reference Table 7

Table 7: Minimum 'H' for Figure 47.

Roof Pitch	Minimum Height (H)	
	Feet	Meters
Flat to 7/12	1	0.3
Over 7/12 to 8/12	1.5	0.46
Over 8/12 to 9/12	2	0.61
Over 9/12 to 10/12	2.5	0.76
Over 10/12 to 11/12	3.25	0.99
Over 11/12 to 12/12	4	1.22
Over 12/12 to 14/12	5	1.52
Over 14/12 to 16/12	6	1.83
Over 16/12 to 18/12	7	2.13
Over 18/12 to 20/12	7.5	2.29
Over 20/12 to 21/12	8	2.44

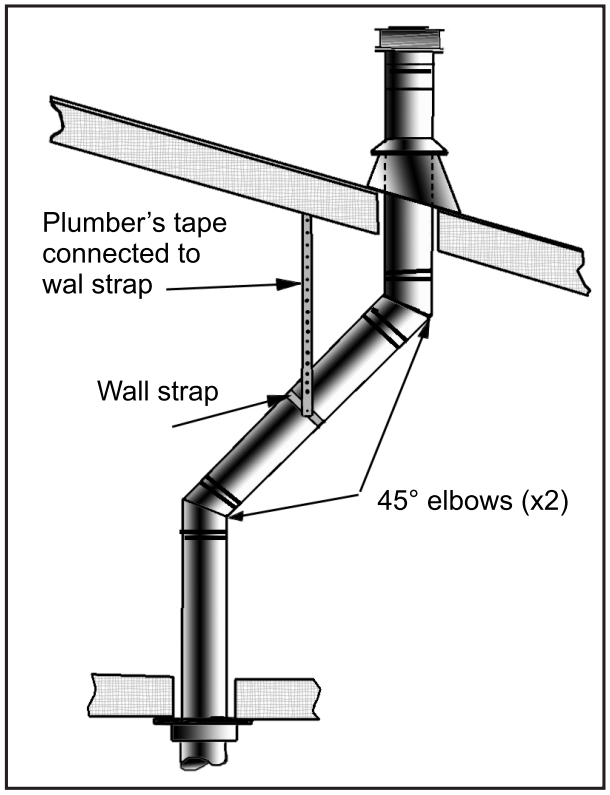

Figure 48: Use of Wall Straps.

(4) Any occupied areas above the first floor, including closets and storage spaces, which the vertical vent passes through, must be enclosed. The enclosure may be framed and sheet-rocked with standard building materials. However consult the appliance manufactures installation instructions for the minimum allowable clearance between the outside of the vent pipe, and the combustible surfaces of the enclosure. Do not fill any required air spaces with insulation.

NOTES:

(1) If an offset is necessary in the attic to avoid obstructions, it is important to support the vent pipe every **3' (914 mm)**, to avoid excessive stress on the elbows, and possible separation. Wall straps are available for this purpose (see Figure 48).

(2) When ever possible, use 45° degree elbows instead of 90° degree elbows. The 45° degree elbow offers less restriction to the flow of flue gases and intake air.

(3) For multi story installations; a ceiling firestop is required at the second floor, and any subsequent floors (see Figure 29). The opening should be framed to **10" (254 mm)** x **10" (254 mm)** inside dimensions, in the same manner as shown in Figure 49.

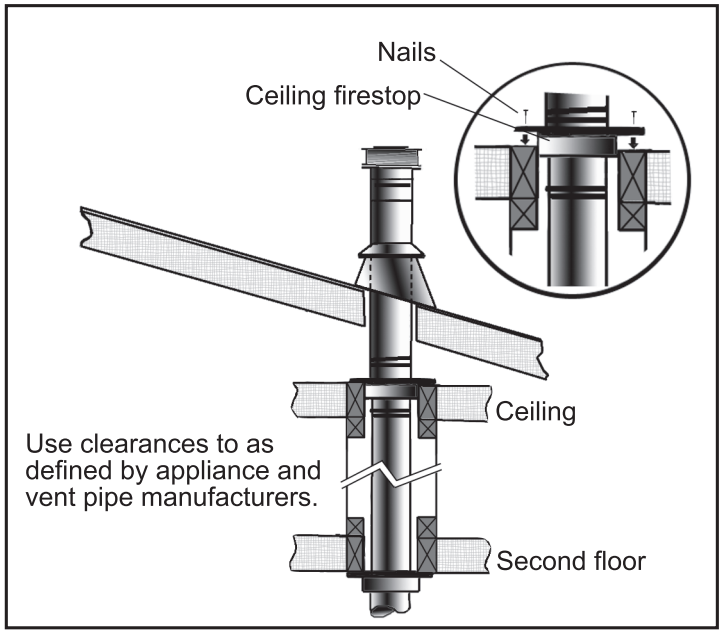

Figure 49: Multi-Story Vent Pipe Installation

QUALIFIED INSTALLERS ONLY

Gas Line Connection and Testing:

WARNING: Only persons licensed to work with gas piping may make the necessary gas connections to this appliance.

GAS LINE CONNECTION

- This stove is equipped with a certified flexible pipe located on the right side of the unit terminating in a 3/8" Male NPT fitting. Consult your local authorities codes or the CAN/CGA B 149 (1 or 2) installation code in Canada, or in the USA gas installations follow either local codes or the current edition of the National Fuel Gas Code ANSI Z223.1.
- The efficiency rating of this appliance is a product thermal efficiency rating determined under continuous operating conditions and was determined independently of any installed system.

The appliance and its shutoff valves must be disconnected from the gas supply piping system during any pressure testing where the pressure exceeds ½ PSIG (3.45 KPa) or damage will occur to the valve.

The appliance must be isolated from the gas supply piping system by closing its individual manual shutoff valve during any pressure testing of the gas supply piping system at test pressures equal to or less than ½ psig (3.45 KPa).

Always check for gas leaks with a soap and water solution after completing the required pressure test.

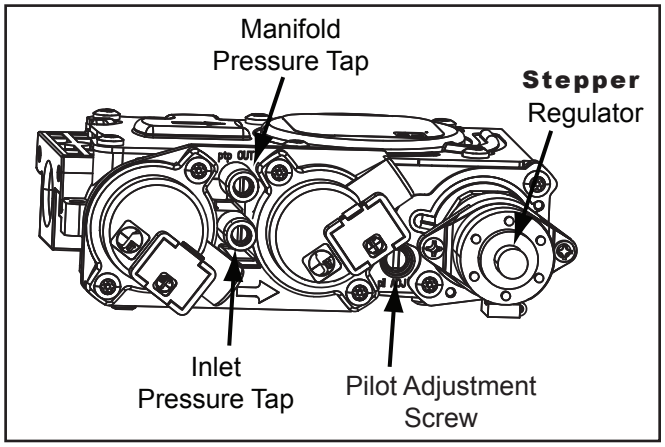

Figure 50: Fully Labeled Gas Valve.

TO TEST VALVE PRESSURES

The pressure taps are located on the top right of the valve shown in Figure 50.
- Turn set screw 1 turn counter clockwise to loosen,
- Place 5/16" (8 mm) I.D. hose over pressure tap system.
- Check pressures using a manometer.
- When finished, release pressure, remove hose & tighten set screw.

Table 8: Pressure and BTU Information.

	Natural Gas	Propane
Main Orifice	#28	#44
Manifold Pressure	3.6" W.C. (0.89 KPa)	10.0" W.C. (2.49 KPa)
Min. Manifold Pressure	1.6" W.C. (0.39 KPa)	6.4" W.C. (1.59 KPa)
Max Supply Pressure	7.0" W.C. (1.74 KPa)	11.0" W.C. (2.74 KPa)
Min. Supply Pressure	4.5" W.C. (1.12 KPa)	10.4" W.C. (2.59 KPa)
Max BTU/hr Input	51,000 BTU/hr (14.95 KW)	51,000 BTU/hr (14.95 KW)
Min. BTU/hr Input	34,000 BTU/hr (9.96 KW)	39,500 BTU/hr (11.58 KW)

NEVER USE AN OPEN FLAME FOR LEAK TESTING.

QUALIFIED INSTALLERS ONLY

ELECTRICAL REQUIREMENTS:

The fireplace must be electrically connected and grounded in accordance with local codes or, in the absence of local codes, with the current CSA C22.1 Canadian Electrical Code Part 1, Safety Standards For Electrical Installations, or The National Electrical Code ANSI / NFPA 70 in the US.

WARNING: The electrical grounding instructions must be followed. The fan kit is equipped with a three-prong (grounding) plug for your protection against shock hazard, and should be plugged directly into a properly grounded three-prong outlet. DO NOT cut or remove the grounding prong from this plug.

CAUTION: When servicing controls, label all wires prior to disconnection. Wiring errors can cause improper and dangerous operation. Verify proper operation after servicing.
If any of the original wire as supplied with the appliance must be replaced, it must be replaced with 18 AWG wire with a temperature rating of 105°C

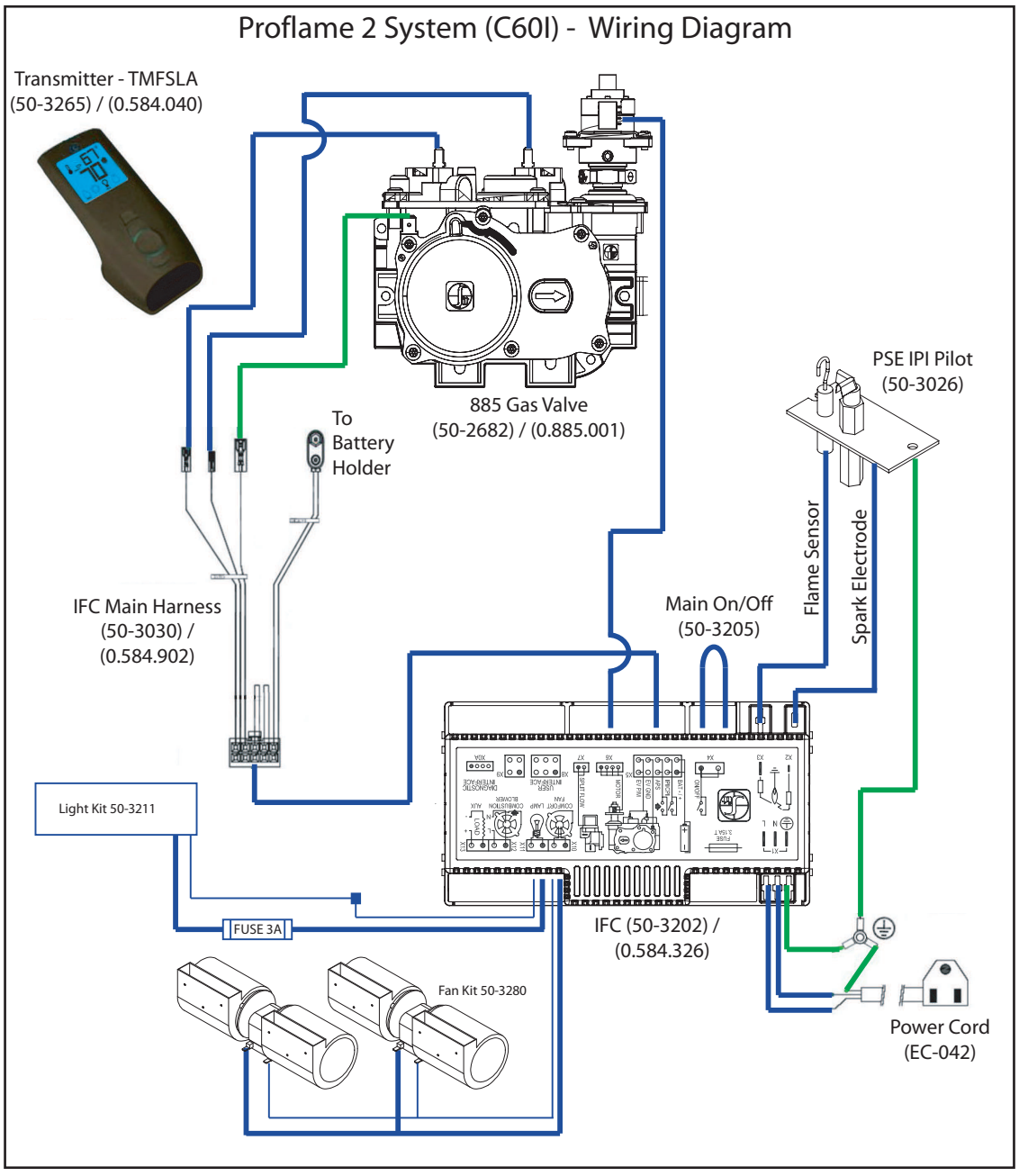

Figure 51: C60I Wiring Diagram

QUALIFIED INSTALLERS ONLY

The C60I needs a hard-wired power connection in order for the unit to operate. There is also a battery pack that takes four AA batteries in case there is a power loss.

All electrical connections must be made by a certified electrician.

There is an electrical box located in the cabinet on the left side of the fireplace. The Power wire connection is to be made inside the elctrical box. There is a strain relief on the outside of the cabinet to secure the wiring in place. The recepticle should be wired a shown in figure 52. If wiring the convection fan kit or light kit options please see wiring diagrams.

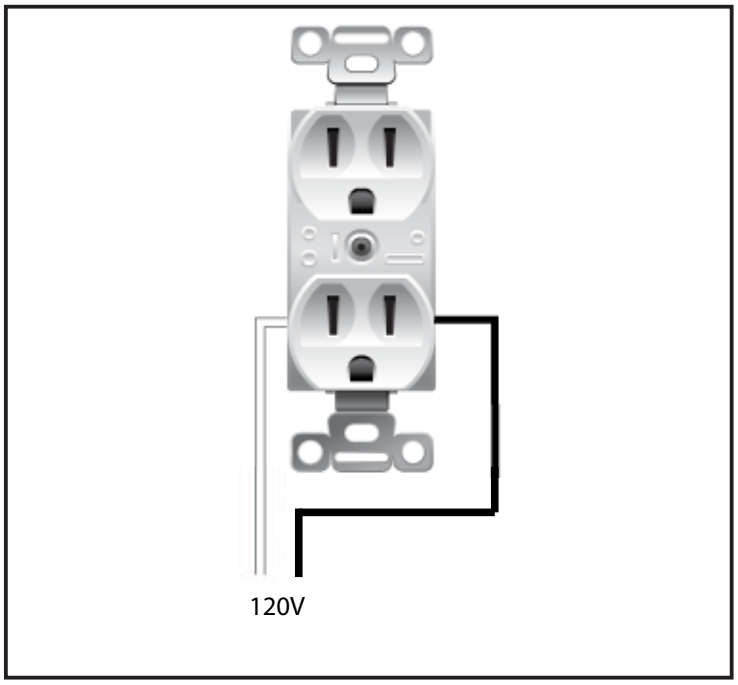

Figure 52: C60I Receptacle Wiring

C60I IPI Dual Covection Fan Kit (50-3354)

The C60I has an optional dual convection fan kit that can be installed at before or after the fireplace installation. The fans are operated by the remote controller. The fans can be turned on or off at anytime with the remote. There are also 6 different fan speed settings.

The fireplace must be electrically connected and grounded in accordance with local codes or, in the absence of local codes, with the current CSA C22.1 Canadian Electrical Code Part 1, Safety Standards For Electrical Installations, or The National Electrical Code ANSI / NFPA 70 in the US..

CAUTION: When servicing controls, label all wires prior to disconnection. Wiring errors can cause improper and dangerous operation. Verify proper operation after servicing. If any of the original wire supplied with the appliance must be replaced, it must be replaced with 18 AWG wire with a temperature rating of 105°C.

QUALIFIED INSTALLERS ONLY

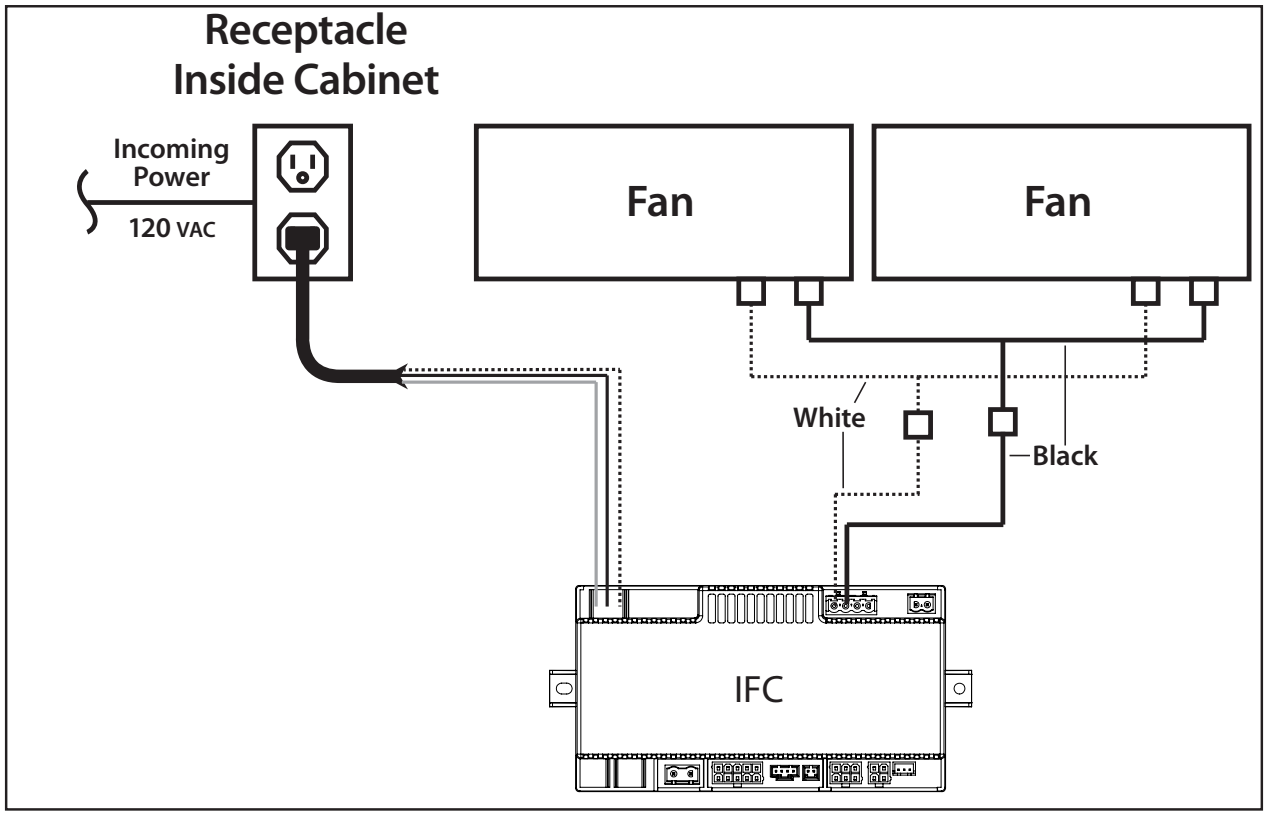

Figure 53: Fan Kit Wiring Diagram

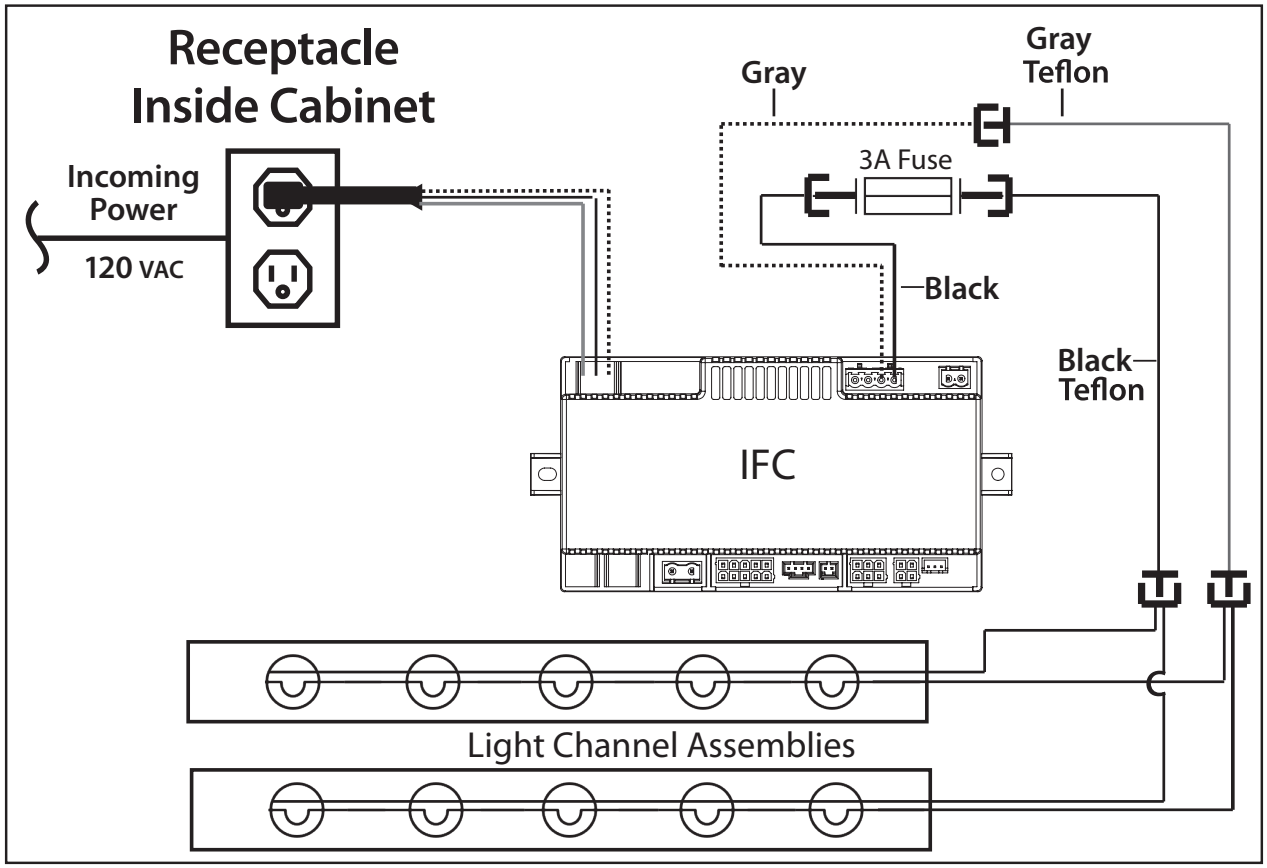

Figure 54: Light Kit Wiring Diagram

C60I Light Kit (50-3342)

The C60I has an optional light kit that is wired into the IFC.

The fireplace must be electrically connected and grounded in accordance with local codes or, in the absence of local codes, with the current CSA C22.1 Canadian Electrical Code Part 1, Safety Standards For Electrical Installations, or The National Electrical Code ANSI / NFPA 70 in the US..

CAUTION: When servicing controls, label all wires prior to disconnection. Wiring errors can cause improper and dangerous operation. Verify proper operation after servicing. If any of the original wire supplied with the appliance must be replaced, it must be replaced with 18 AWG wire with a temperature rating of 105°C. If the original wire supplied to the light bulbs is damaged you must contact your dealer. This is special high rated oven wire and it must be replaced with the same.

Burner Tray Installation:

There are two styles of burner tray. The standard burner tray is supplied with the unit and used for all media base options with the exception of 50-3342 (Light Kit); the Light Kit includes a perforated burner tray to allow light to come through. Both tray styles are handled the same and removed with 6 screws using a T-20 screwdriver.

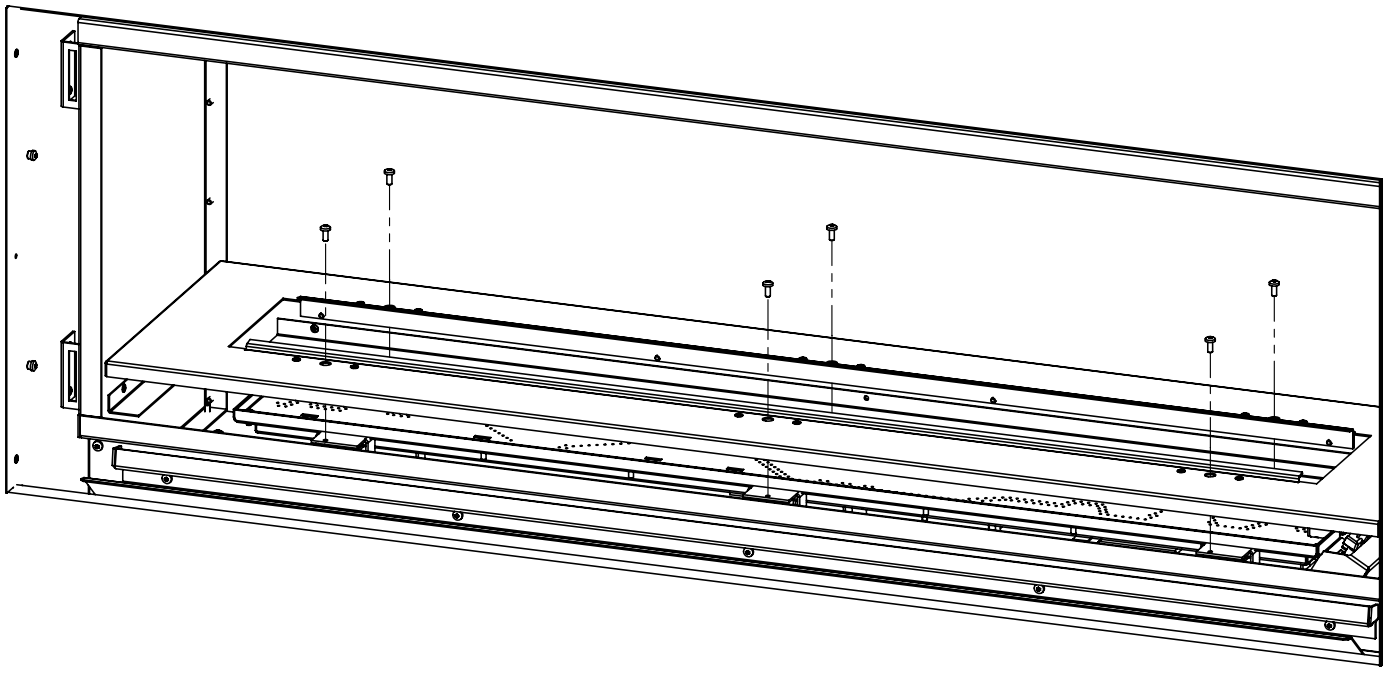

Figure 55: Standard Burner Tray Install/Removal

Panel and Media Installation:

1. Remove the safety screen and glass door

2. If you are installing 50-3342 (Light Kit) remove the burner tray now using a T-20 Torx screwdriver; refer to Secondary Installation - Light Kit Installation or see instruction sheet included with the kit. Install perforated burner tray once lights are installed.

3. Place your burner media into the burner pan (vermiculite or glass media). Create a **thin layer** that evenly covers the entire burner pan; pat it down gently. **If flame looks uneven with overly high or low sections the media can be adjusted. If flame is too high make media thicker, if low thin media out.**

WARNING: Be sure there is no media in the protected pilot area of the burner pan.

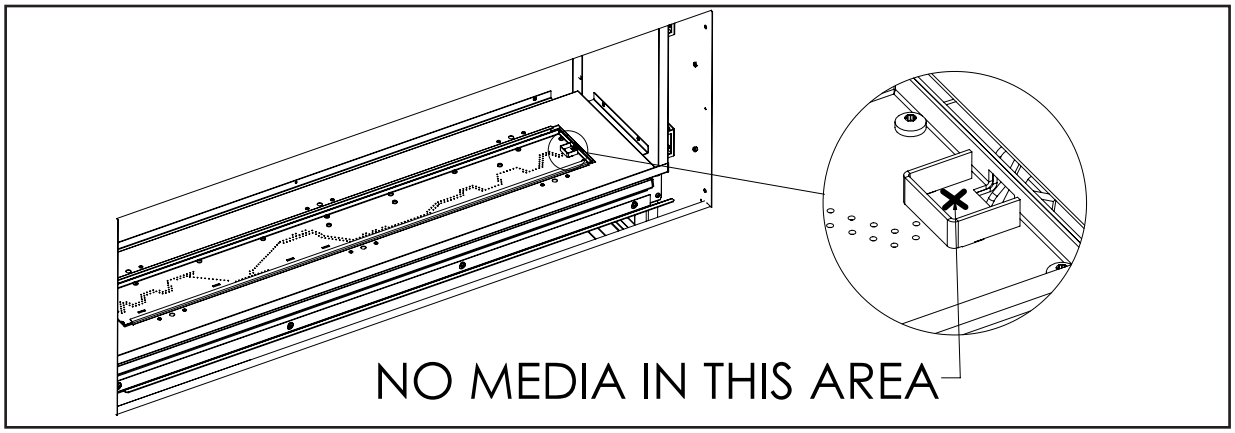

Figure 56: Protected Pilot Area

4. Wear clean vinyl gloves when handling 50-3338 (Fluted) and 50-3339 (Ledgestone) to prevent skin contact with the refractory. Wear clean vinyl gloves when handling 50-3340 (Enameled) to prevent smudging; use denatured alcohol to clean. Unwrap your new Enviro liner set from the protective packaging. Be careful not to scratch or bump the liners as they are very fragile. If the liners arrive damaged please contact your nearest Enviro dealer.

5. Remove the 3 liner retainers from inside the firebox, loosen screws using a T-20 Torx screwdriver. The retainers are key slotted so they can be removed without removing the screws.

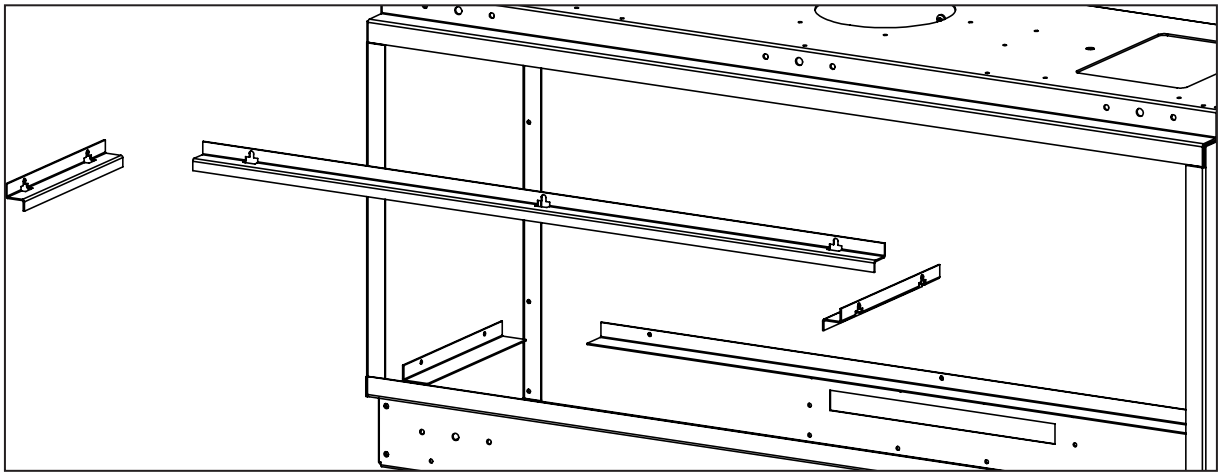

Figure 57: Panel Installation

6. Ensure there is nothing on top of the media tray such as glass media or glass bezel strips. Angle the rear liner into the firebox with finesse. The panel will fit in, dont worry, place one corner in towards the back and rotate inward. Slip it into the channel behind the media tray and install the rear liner retainer.

7. If you have media tray option 50-3343 (Glass Bezel) place the bezel strips around the tray before the side liners are installed. If you are using 50-3344 (Glass Media Bed) or 50-3342 (Light Kit) install tray media after the side liners.

8. Place the side liners into the side channels of the media tray. 50-3339 (Ledgestone) and 50-3340 (Enameled) will be placed in at the bottom and rotated up until seated. 50-3338 (Fluted) will be placed in at the rear and rotated inward until seated. Once seated secure the top with the retainers using a T-20 Torx screwdriver. If using 50-3343 (Glass Bezel) pull the sides in so they butt up with the long strips.



Figure 58: Glass Bezel with Vermiculite

9. If you are using 50-3344 (Glass Media Bed) or 50-3342 (Light Kit) you may now cover the entire media tray in a thin layer of glass pebbles; one layer is all you need.



Figure 59: Glass Media Bed

10. You have now successfully installed your panels and media base. You may now arrange your optional 50-3347 (Log & Rock Set); see instruction sheets for further detail.

11. Re-install the glass door and safety screen.

IMPORTANT: IF THE AIR SLOT AROUND THE BURNER IS BLOCKED WITH MEDIA THIS WILL CAUSE THE FIREPLACE NOT TO BURN PROPERLY.

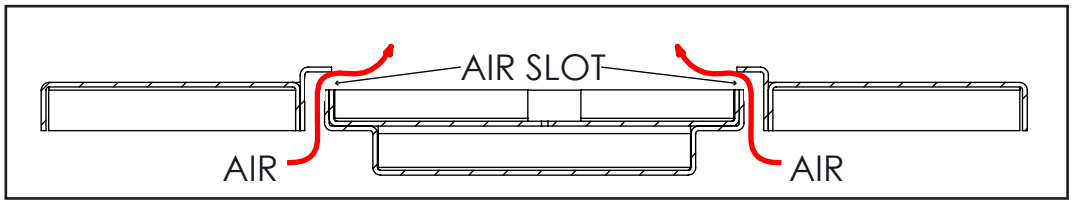

Figure 60: Burner Side Cross Section

Secondary Installation

Log Set Installation:

The placement of the logs is not arbitrary. If they are positioned incorrectly, the flames can be impinged and will not burn correctly. See the instructions included with 50-3347 Log & Rock set for more detail. **NOTE: The logs are fragile and should be handled gently.**

1. Position Log #1 in the back left corner; the log will butt up to both the side and rear panels. Place the Log #2 into the back right corner; the log will butt up to both the side and the rear panel.



2. Position Log #3 over top the burner; there should be 3 points of interest to help position this log. Make contact with the left liner, the rear liner, and the firebox edge opening.



3. Position Log #4 underneath Log#3 along the front media strip. Place the charred end toward the burner as shown.





4. Position Log #5 on the Log #3 alignment pin. Bring the other end close to the firebox opening.



Secondary Installation

3. Position Log #6 front and centre; this log can sit improperly so be sure you rotate it inward toward the burner so seat it correctly.



3. Position Log #7 as shown; the end will butt up to the right liner and align along the edge of the fire-box opening.





3. Position Log #8 as shown. Keep the log upward and proud for best appearence, it may slip on the fresh bezel strip.



3. Position rocks as shown; your log & rock set is now complete.



Trouble Shooting

Table 8: Troubleshooting

Problem	Possible Cause	Solution
Locking conditions	Reset the Proflame IFC board	· Turn the system off by pressing the ON/OFF button on the transmitter
		· After approximately 2 seconds press the ON/OFF button on the transmitter again.
		· In the manual flame control mode, use the down arrow button to reduce the flame to off, indicated by the word OFF displayed on the transmitter LCD screen.
		· Wait approximately 2 seconds and press the up arrow button, the ignition sequence will start.
Main burners will not start	The pilot flame has gone out	· See "Pilot will not remain lit"
	The remote control is not working correctly	· Replace the batteries
	The thermostat is disconnected or set too high	· Set the thermostat to a lower temperature
	Problem with thermopile circuit	· Check gas line pressure
		· Check wiring to thermostat for breaks
		· Check for flame impingement on thermopile
Flame lifting	Leak in vent pipe	· Check for leaks in vent connections
	Improper vent configuration	· Check vent configuration with manual
	Terminal may be re-circulating flue gases	· Check to see if terminal is on correctly
		· May need to install high wind termination cap.
		· Contact dealer
Blue Flames	The heater has just been started	· Normal during start up: flame will yellow as the fireplace heats up
	Improper air shutter adjustment	· Adjust air shutter – contact your dealer
Glass fogs up	Normal condition: after the appliance warms up the glass will be clear.	**Due to additives in gas, glass may get hazy during operation** Clean as needed.
Flames are burning "dirty" or sooting	The logs are placed incorrectly	· Check log positioning
	Improper air shutter adjustment	· Increase primary air by opening the air shutter and/or by opening the vent restrictor
		· Check for proper venting and blockage of the vent termination
		· See also "Burners will not remain lit"
	Incorrect rating input	· Check manifold pressure and clock input rating for over-firing

If a particular flame is curving excessively your burner media not be evenly distributed creating an abnormal draft on the flame; position burner media infront of the secondary air slots in the affected area to slow down the draft. You can fine tune the flame this way to ensure healthy flame appearence.

Parts Diagram

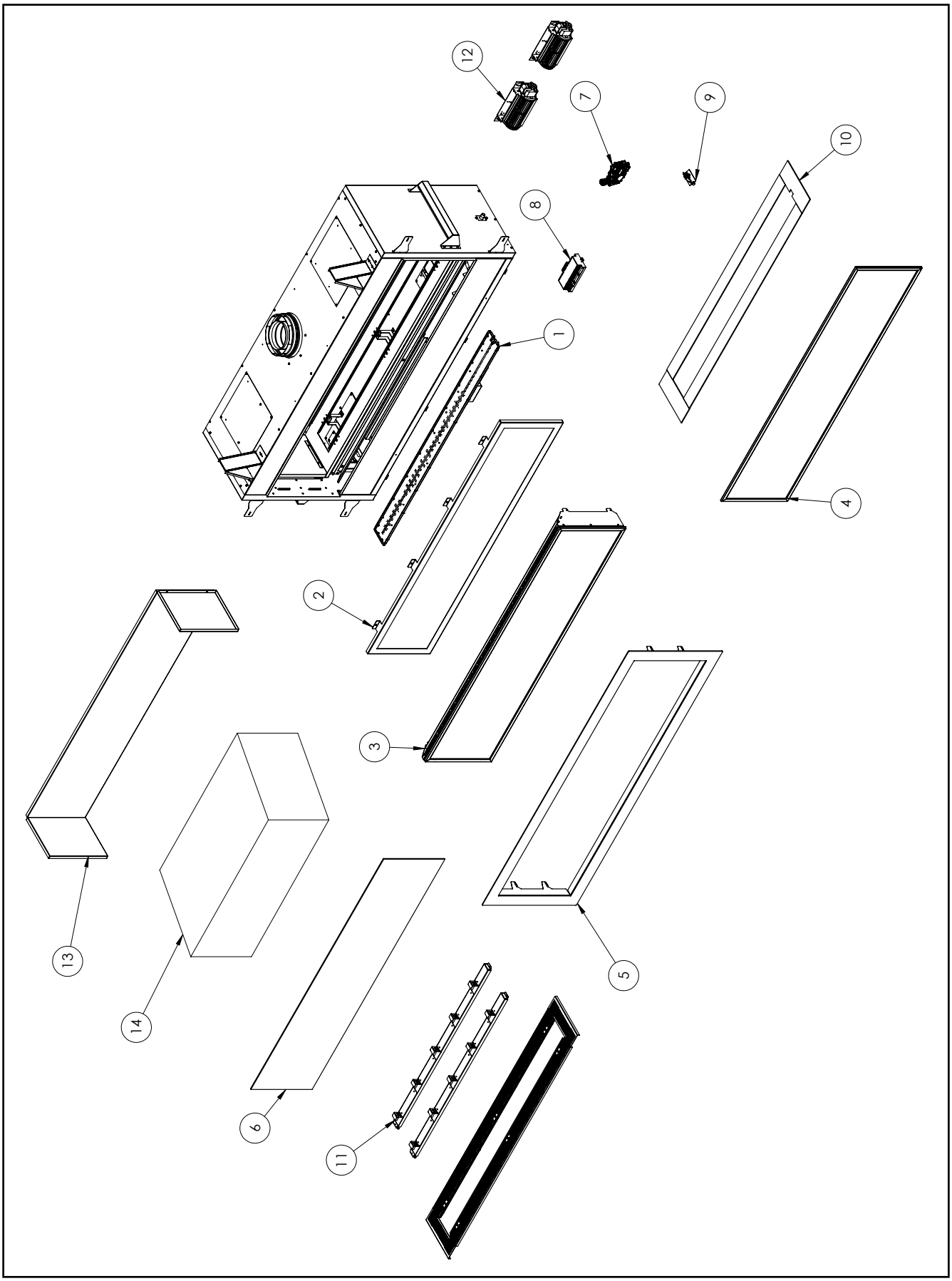

51

Parts List

Table 9: C60I Parts List

1	C60 Pan Burner	50-3386
2	C60 Door Complete	50-3387
3	C60 Safety Screen Complete	50-3388
4	C60 Clear View Screen Only	50-3368
5	C60 Borderview Surround Powder Coated (Grey)	50-3337
5	C60 Borderview Surround Nickel Plated	50-3341
6	C60 Door Glass with Gasket	50-3389
7	S.I.T. 885 Valve w/ NG Stepper Motor	50-2682
8	Proflame 2 IFC (0.584.326)	50-3202
9	PSE Pilot Assembly - Intermittant Pilot	50-3026
10	C60 Tray w/ Glass Bezel (Glass beads and Vermiculite)	50-3343
11	C60 Halogen Light Kit	50-3342
12	IPI Dual Convection Fan Kit (240 CFM Combined)	50-3354
-	C60 Fan Only	50-2260
13	C60 Fluted Liners	50-3338
13	C60 Ledgestone Liners	50-3339
13	C60 Porcelain Liners	50-3340
14	C60 Ultra High Definition Driftwood Log Set	50-3347
-	C60 Black Glass Beads	50-3344
-	C60I LP to NG Fuel Conversion Kit	50-3346
-	C60I NG to LP Fuel Conversion Kit	50-3345
-	C60 GLASS BEZEL	50-3390
-	C60 VERMICULITE (4 CUPS)	50-3391
-	Replacement Fuse 3A	50-3289
-	35W Halogen Bulb	50-3291
-	C60I Owners Manual	50-3393
-	12 oz. Can of Matallic Black Touch Up Paint	PAINT-12-MB

Notes

Warranty for Enviro **Gas** Products

Sherwood Industries Ltd. ("Sherwood") hereby warrants, subject to the terms and conditions herein set forth, this product against defects in material and workmanship during the specified warranty period starting from the date of original purchase at retail. In the event of a defect of material or workmanship during the specified warranty period, Sherwood reserves the right to make repairs or to assess the replacement of a defective product at Sherwood's factory. The shipping costs are to be paid by the consumer. All warranties by Sherwood are set forth herein and no claim shall be made against Sherwood on any oral warranty or representation.

Conditions

- A completed warranty registration must be submitted to Sherwood within 90 days of original purchase via the online warranty registration page or via the mail-in warranty registration card provided. Have the installer fill in the installation data sheet in the back of the manual for warranty and future reference.
- This warranty applies only to the original owner in the original location from date of install.
- The unit must have been properly installed by a qualified technician or installer, and must meet all local and national building code requirements.
- The warranty does not cover removal and re-installation costs.
- Sherwood Industries Ltd. reserves the right to make changes without notice.
- Sherwood Industries Ltd. and its employees or representatives will not assume any damages, either directly or indirectly caused by improper usage, operation, installation, servicing or maintenance of this appliance.
- A proof of original purchase must be provided by you or the dealer including serial number.
- This warranty does not cover any discoloration of the safety screen mesh.

Exclusions

An expanded list of exclusions is available at www.enviro.com/help/warranty.html

This warranty does not cover:

- Damage as a result of improper usage or abuse.
- Damage caused from over-firing due to incorrect setup or tampering.
- Damage caused by incorrect installation.

To the Dealer

- Provide name, address and telephone number of purchaser and date of purchase.
- Provide date of purchase. Name of installer and dealer. Serial number of the appliance. Nature of complaint, defects or malfunction, description and part # of any parts replaced.
- Pictures or return of damaged or defective product may be required.

To the Distributor

- Sign and verify that work and information are correct.

Sherwood Industries Ltd.
6782 Oldfield Road, Victoria, BC . Canada V8M 2A3
Online warranty registration: www.enviro.com/warranty/

Category	One Year	Two Year	Limited Lifetime (7yr)
Parts [1,2] (unit serial number required)		✔	
Firebox Liner Panels [3]		✔	
Firebox			✔
Heat Exchanger			✔
Burner			✔
Ceramic Logs [4]			✔
Ceramic Glass [5]	✔		
Pedestal / Legs (excluding finish)			✔
Door Assembly			✔
Surround Panels (excluding finish)			✔
Exterior Panels (excluding finish)			Up to 5 years
Electrical Components		✔	
Exterior Surface Finishing	✔		
Labour	✔		

[1] Whereas warranty has expired, replacement parts will be warrantied for 90 days from part purchase date. Labour not included. Unit serial number required.

[2] 50-173 Westport Fan Kit covered for up to 5 years from purchase date. Labour not included. Unit serial required.

[3] Excluding damage to the finish caused by improper setup of the appliance, or color changes.

[4] Log set and panels excludes wear and tear or breakage caused by cleaning or service.

[4] Glass is covered for thermal breakage. Photos of box, inside of door, and unit serial # must be supplied for breakage due to shipping.

[6] Exterior Surface finishing covers plating, enamel or paint and excludes colour changes, chipping, and fingerprints.

Travel costs not included.

Installation Data Sheet

The following information must be recorded by the installer for warranty purposes and future reference.

NAME OF OWNER:

_____

ADDRESS:

_____

_____

_____

PHONE:_____

NAME OF DEALER:

_____

ADDRESS:

_____

_____

_____

PHONE:_____

MODEL:_____

SERIAL NUMBER:_____

DATE OF PURCHASE: _____ (dd/mm/yyyy)

DATE OF INSTALLATION:_____(dd/mm/yyyy)

☐ NATURAL GAS (NAT) ☐ PROPANE(LPG)

INLET GAS PRESSURE:_____in wc

MAIN BURNER ORIFICE:_____# DMS

PILOT ORIFICE #_____OR_____in diam.

INSTALLER'S SIGNATURE:

_____

NAME OF INSTALLER:

_____

ADDRESS:

_____

_____

_____

PHONE:_____

MANUFACTURED BY:
SHERWOOD INDUSTRIES LTD.
6782 OLDFIELD RD. SAANICHTON, BC, CANADA V8M 2A3
www.enviro.com
April 27, 2018
C-15044