WARRANTY REGISTRATION
enviro.com/warranty

MERIDIAN-1

PELLET STOVE

OWNER'S MANUAL





PLEASE READ THIS ENTIRE MANUAL BEFORE INSTALLATION AND USE OF THIS PELLET BURNING ROOM HEATER. FAILURE TO FOLLOW THESE INSTRUCTIONS COULD RESULT IN PROPERTY DAMAGE, BODILY INJURY OR EVEN DEATH

CONTACT YOUR BUILDING OR FIRE OFFICIALS ABOUT RESTRICTIONS AND INSTALLATION INSPECTION REQUIREMENTS IN YOUR AREA.

INSTALLER: LEAVE THIS MANUAL WITH THE STOVE.
CONSUMER: RETAIN THIS MANUAL FOR FUTURE REFERENCE.

50-765

Fr Version française: www.enviro.com/fr

Table of Contents

Introduction....3
- Rating Label Location....3
- Important Safety Data....3
- Safety Warnings And Recommendations....3
- Pellet Quality....5
- Emissions and Efficiencies....6

Operating Instruction....7
- Control Board Functions....7
- Automatic Safety Features of your Pellet Stove....7
- Operating your Pellet Stove....7
- Turning your Pellet Stove Off....8
- Slider/Damper Set-Up....9
- Guidelines for Fine-Tuning for Fuel Quality....10

Routine Cleaning and Maintenance....11

Installation....14
- Deciding Where to Locate your Pellet Appliance....14
- Removing Pellet Stove From Pallet....15
- Dimensions - Freestanding....15
- Dimensions - Fireplace Insert....16
- Clearances to Combustibles - Freestanding....16
- Alcove Clearances - Freestanding....16
- Clearances to Combustibles - Fireplace Insert....17
- Installation of Pedestal and Leveling Legs - Fireplace Insert....17
- Installing Hopper Cover and Adjusting Hopper Height - Fireplace Insert....17
- Mobile Home Installation - Freestanding:....18
- Vent Termination Requirements....19
- Exhaust And Fresh Air Intake Locations....20
- Outside Fresh-Air Connection....20
- Corner Through Wall Installation - Freestanding....21
- Horizontal Exhaust Through Wall Installation - Freestanding....21
- Vertical Rise with Horizontal Termination Installation (Recommended) - Freestanding....23
- Through Concrete Wall With Vertical Rise Installations - Freestanding....23
- Inside Vertical Installations - Freestanding....24
- Outside Vertical Installations - Freestanding....25
- Hearth Mount Installation - Freestanding....26
- Installation with Exterior Mounted Exhaust Blower - Freestanding....27
- Through Wall Vertical Installation With Exhaust Blower - Freestanding....29
- Masonry Fireplace Insert Installation - Fireplace Insert....30
- Positive Flue Connection without a Full Reline - Fireplace Insert (USA Only)....31
- Installation and Removal of Control Panel in The Surround Panel - Fireplace Insert....32
- Assembly and Installation of Insert Surround Panels - Fireplace Insert....32
- Plated Trim Installation....33
- Plated Door Installation....34
- Thermostat Installation....35

Troubleshooting....36

Wiring Diagram....39

Parts List - Components....40

Parts List - Options....42

Parts Diagram - Components....43

Parts Diagram - Freestanding Steel....44

Parts Diagram - Insert Steel....45

Notes....46

Warranty....47

Installation Data Sheet....48

Introduction

Rating Label Location:

The rating label is located on the inside of the ash pan cover.

Important Safety Data:

Please read this entire Owner's Manual before installing or operating your ENVIRO Pellet Stove. Failure to follow these instructions may result in property damage, bodily injury or even death. Contact your local building or fire official to obtain a permit and any information on installation restrictions and inspection requirements for your area.

To prevent the possibility of a fire, ensure that the appliance is properly installed by adhering to the installation instructions. An ENVIRO dealer will be happy to assist you in obtaining information with regards to your local building codes and installation restrictions.

Be sure to maintain the structural integrity of the home when passing a vent through walls, ceilings, or roofs.

The stove's exhaust system works with negative combustion chamber pressure and a slightly positive chimney pressure. It is very important to ensure that the exhaust system be sealed and airtight. The ash pan and viewing door must be locked securely for proper and safe operation of the pellet stove.

Do not burn with insufficient combustion air. A periodic check is recommended to ensure proper combustion air is admitted to the combustion chamber. Setting the proper combustion air is achieved by adjusting the slider damper located on the left side of the stove.

When installing the stove in a mobile home, it must be electrically grounded to the steel chassis of the home and bolted to the floor. Make sure that the structural integrity of the home is maintained and all construction meets local building codes.

Minor soot or creosote may accumulate when the stove is operated under incorrect conditions such as an extremely rich burn (black tipped, lazy orange flames).

If you have any questions with regard to your stove or the above-mentioned information, please feel free to contact your local dealer for further clarification and comments.

Safety Warnings And Recommendations:

Caution: Do not connect to any air distribution duct or system.
Do not burn garbage or flammable fluids such as gasoline, naptha or engine oil.
Unit hot while in operation. Keep children, clothing and furniture away. Contact may cause skin burns.

SOOT: Operation of the stove with insufficient combustion air will result in the formation of soot which will collect on the glass, the heat exchanger, the exhaust vent system, and may stain the outside of the house. This is a dangerous situation and is inefficient. Frequently check your stove and adjust the slider/damper as needed to ensure proper combustion. **See: "Slider/Damper Setting".**

CLEANING: There will be some build up of fly ash and small amounts of creosote in the exhaust. This will vary due to the ash content of the fuel used and the operation of the stove. It is advisable to inspect and clean the exhaust vent semi-annually or every two tons of pellets.

Introduction

ELECTRICAL: The use of a surge protected power bar is recommended. The unit must be grounded. The grounded electrical cord should be connected to a standard 115 volts (4.6 Amps), 60 hertz electrical outlet. Be careful that the electrical cord is not trapped under the appliance and that it is clear of any hot surfaces or sharp edges and also must be accessible. If this power cord should become damaged, a replacement power cord must be purchased from the manufacture or a qualified ENVIRO dealer. This unit's maximum power requirement is 520 watts.

GLASS: Do not abuse the glass by striking or slamming the door. Do not attempt to operate the stove with broken glass. The stove uses ceramic glass. Replacement glass must be purchased from an ENVIRO dealer. Do not attempt to open the door and clean the glass while the unit is in operation or if glass is hot. To clean the glass, use a soft cotton cloth and mild window cleaner, gas or wood stove glass cleaner, or take a damp paper towel and dip into the fly ash. This is a very mild abrasive and will not damage the glass.

FLAMMABLE LIQUIDS: Never use gasoline, gasoline-type lantern fuel, kerosene, charcoal lighter fluid, or similar liquids to start or "freshen up" a fire in the heater. Keep all such liquids well away from the heater while it is in use.

SMOKE DETECTOR: Smoke detectors should be installed and maintained in the structure when installing and operating a pellet burning appliance.

OPERATION: The ash pan and door must be closed securely for proper and safe operation of the pellet stove. Also ensure all gaskets on the door are checked and replaced when necessary.

INSTALLATION: Be sure to maintain the structural integrity of your home when passing a vent through walls, ceilings, or roofs. It is recommended that the unit be secured into its position in order to avoid any displacement.

DO NOT INSTALL A FLUE DAMPER IN THE EXHAUST VENTING SYSTEM OF THIS UNIT.

DO NOT CONNECT THIS UNIT TO A CHIMNEY FLUE SERVING ANOTHER APPLIANCE.

FRESH AIR: Outside Fresh Air connection is optional. Must be connected to all units installed in Mobile and "Air Tight Homes" (R2000) or where required by local codes. Consider all large air moving devices when installing your unit and provide room air accordingly. Limited air for combustion may result in poor performance, smoking and other side effects of poor combustion.

If you have any questions with regards to your stove or the above-mentioned information, please feel free to contact your local dealer for further clarification and comments.

SINCE SHERWOOD INDUSTRIES LTD. HAS NO CONTROL OVER THE INSTALLATION OF YOUR STOVE, SHERWOOD INDUSTRIES LTD. GRANTS NO WARRANTY IMPLIED OR STATED FOR THE INSTALLATION OR MAINTENANCE OF YOUR STOVE. THEREFORE, SHERWOOD INDUSTRIES LTD. ASSUMES NO RESPONSIBILITY FOR ANY CONSEQUENTIAL DAMAGE(S).

Introduction

Pellet Quality:

Pellet quality is important, please read the following:

Your enviro pellet stove has been designed to burn wood pellets only. Do not use any other type of fuel, as this will void any warranties stated in this manual.

The performance of your pellet stove is greatly affected by the type and quality of wood pellets being burned. As the heat output of various quality wood pellets differs, so will the performance and heat output of the pellet stove.
CAUTION: It is important to select and use only pellets that are dry and free of dirt or any impurities such as high salt content. Dirty fuel will adversely affect the operation and performance of the unit and will void the warranty. The Pellet Fuel Industries (P.F.I.) has established standards for wood pellet manufacturers. We recommend the use of pellets that meet or exceed these standards. Ask your dealer for a recommended pellet type.

P.F.I. PELLET STANDARDS:

Fines (fine particles).....1% maximum through a ⅛" screen
Bulk Density.....40 pound per cubic foot minimum
Size.....¼" to 5/16" diameter ½ – 1½" long maximum
Ash Content.....1% maximum (Premium grade)
.....3% maximum (Standard grade)
Moisture Content.....8% maximum
Heat Content.....approximately 8200 Btu per pound minimum

ASH: The ash content of the fuel and operation of your stove will directly determine the frequency of cleaning. The use of high ash fuels may result in the stove needing to be cleaned daily. A low ash fuel may allow longer intervals between cleaning.

CLINKERING: [clinkers are silica (sand) or other impurities in the fuel that will form a hard mass during the burning process]. This hard mass will block the air flow through the Burn Pot Liner and affect the performance of the stove. Any fuel, even approved types, may tend to clinker. Check the Burn-Pot Liner daily to ensure that the holes are not blocked with clinkers. If they become blocked, remove the liner (when the unit is cold) and clean/scrape the clinkers out. Clean the holes with a small pointed object if required. Refer to the section Routine Cleaning and Maintenance.

PELLET FEED RATES: Due to different fuel densities and sizes, pellet feed rates may vary. This may require an adjustment to the slider damper setting or to the auger feed trim setting on low.

Since Sherwood Industries Ltd. has no control over the quality of pellets that you use, we assume no liability for your choice in wood pellets.

Store pellets at least 36" (1 m) away from the pellet stove.

SAVE THIS INSTRUCTION MANUAL FOR FUTURE REFERENCE

Emissions and Efficiencies

Emissions and Efficiency - Meridian:

This manual describes the installation and operation of the Enviro Meridian pellet heater. This heater is U.S. ENVIRONMENTAL PROTECTION AGENCY Certified to comply with 2020 particulate emission standards. Under specific test conditions this heater has been shown to deliver heat at rates ranging from 8,894 - 23,765 Btu/hr.

Efficiency: 69.7% HHV

EM
O-TL
US
0268PM025E

WARNING: This pellet heater needs periodic inspection and repair for proper operation. It is against federal regulations to operate this pellet heater in a manner inconsistent with operating instructions in this manual.

WARNING: This wood pellet has a manufacturer set minimum low burn rate that must not be altered. It is against federal regulations to alter this setting or otherwise operate this pellet heater in a manner inconsistent with operating instructions in this manual.

Operating Instructions

Control Board Functions:

1. **AUGER LIGHT:** This green light will flash in conjunction with the auger pulse.
2. **MODE LIGHT:** Responsible for signaling the state of the control board. When the light is flashing the stove is in an automatic start mode or the thermostat has control of the unit. When the light is solid, the Heat Level Setting can be altered.
3. **THERMOSTAT SWITCH:** Used to set the unit's controls to one of three mode settings; manual, high/low, or auto/off.
4. **FEED RATE TRIM BUTTON:** Used to change the feed rate trims in ¼ second increments for all feed settings. When this button is pressed, all the light will light up on the Heat Output Indicator except for the one that shows the current setting; the default setting is the number 4 light. To adjust the setting hold the Feed Rate Trim button down and press the Heat Level up or down buttons to adjust the setting.

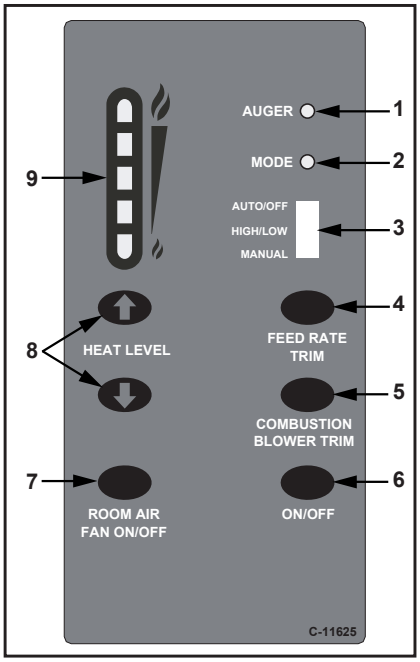

Figure 1: Circuit Board Control Panel Decal.

5. **COMBUSTION BLOWER TRIM BUTTON:** Used to change the Combustion Blower trims in 5 volt increments for all feed settings until it reaches line voltage. When this button is pressed, all the light will light up on the Heat Output Indicator except for the one that shows the current setting; the default setting is the number 2 light. To adjust the setting hold the Combustion Blower Trim button down and press the Heat Level up or down buttons to adjust the setting.
6. **ON/OFF BUTTON:** Used to turn the unit ON and OFF.
7. **ROOM AIR FAN ON/OFF BUTTON:** Used to turn convection fan on or off.
8. **HEAT LEVEL ADJUSTMENT BUTTONS:** When pressed, will change the heat level setting of the unit up or down.
9. **HEAT OUTPUT INDICATOR:** Shows the present heat output setting.

Automatic Safety Features of Your Pellet Stove:

A. The stove will shut off when the fire goes out and the exhaust temperature drops below 120°F (49°C).

B. The stove has a high temperature safety switch. If the temperature on the hopper reaches 200°F (93°C), the auger will automatically stop and the stove will shut down when the exhaust temperature cools #4 light flashes. Dealer will have to reset the sensor. If this happens, call your local dealer to reset the 200°F (93°C) high limit switch. **ALSO FIND THE REASONS WHY THE UNIT OVERHEATED.**

C) The unit is equipped with a vacuum switch to monitor the venting; if it becomes blocked the vacuum switch will turn off the auger and the #2 light on the control board will flash.

Operating Your Pellet Stove:

PRE-BURN INSTRUCTIONS: The burn pot liner holes must be clear and the liner installed properly against the ignitor tube for proper operation. Check the hopper for enough pellets to start the unit.

DO NOT OPERATE THE UNIT WITH THE DOOR OR ASH PAN OPEN.

Note: The thermostat mode can be changed during normal operation.

Operating Instructions

MANUAL MODE:

All control of circuit board function is adjusted at the circuit board.

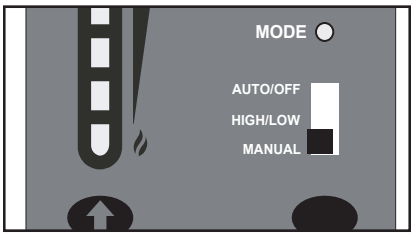

Figure 2: Thermostat Switch in MANUAL position.

To START: Press the ON / OFF button. The stove will turn on. The system light will flash. The Auger Light will flash with each pulse of the auger (the Auger Feed Rate is pre-programmed during start-up). The Heat Level Indicator will show the Heat Level that the stove will run at after start-up and can be adjusted but the change will not take affect until the start -up has finished.

If this is the first time the unit has been started or the unit has run out of fuel, the auger will need to be primed. This can be done by restarting the unit five (5) minutes into its start-up or by putting a small hand full of pellets into the burnpot.

To OPERATE: When a fire has been established, the System Light will turn solid (after approximately 10 - 15 minutes) and the Auger Light will continue to flash to the corresponding Heat Level setting.

The convection blower (room air blower) will turn on. The speed of this blower is controlled by the setting of the heat level output indicator. The convection blower can be turned OFF by depressing the convection blower control button. For the best efficiency the convection blower should be left on at all times.

HIGH/LOW MODE: (Requires a thermostat)

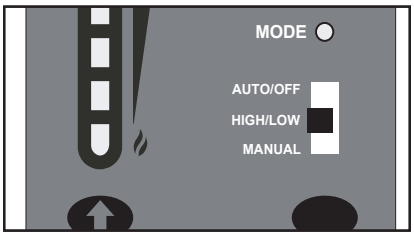

Figure 3: Thermostat Switch in HIGH/LOW position.

INITIAL START-UP: See manual mode above.

OPERATION: When the thermostat calls for heat (contacts are closed) the stove settings are adjustable as per Manual Mode. When the thermostat contacts open, the HEAT LEVEL and Fans will drop down to the LOW setting until the thermostat contacts close again. *The LOW heat setting can be adjusted for different fuel qualities (see "Operating Instructions - Control Board Functions"). The stove will come back to the previous HEAT LEVEL setting when the thermostat contacts close again.

AUTO/OFF MODE: (Requires a thermostat)

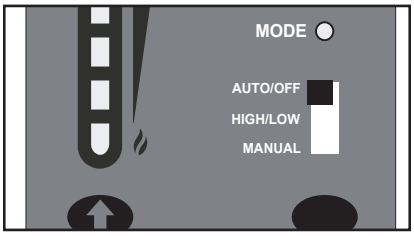

Figure 4: Thermostat Switch in ON/OFF position.

INITIAL START-UP: See manual mode above.

OPERATION: When the thermostat contacts close, the unit will light automatically. Once up to temperature, the stove operates the same as in MANUAL. When the thermostat contacts open, the stove's HEAT LEVEL and Fans will drop down to the LOW setting for 30 minutes. If the thermostat contacts close within the 30 minutes, the HEAT LEVEL will return to the previous MANUAL setting. If the thermostat contacts remain open the stove automatically begins its shutdown routine. The ON / OFF button can be presses at any time the the stove will immediately shut down. The stove will re-light when the thermostat contacts close again.

Turning Your Pellet Stove Off:

- MANUAL and HI / LOW mode: To turn the unit OFF, simply press the ON / OFF button. This will stop the feed of pellets. The blowers will continue to operate and cool the stove down. When cool enough, the stove will turn off.
- AUTO / OFF mode: To turn the unit OFF, turn the thermostat down or off. NOTE: The unit will run on low for three (3) minutes before it turns off.

DO NOT unplug unit while Combustion fan is operating.
This may lead to smoke escaping from the stove.

Operating Instructions

Slider/Damper Set-Up:

THE SLIDER / DAMPER MUST BE SET AT TIME OF INSTALLATION. A Qualified Service Technician or Installer must set the Slider Damper. **This is used to regulate the airflow through the pellet stove. Following these steps will minimize visible emissions.** The slider damper knob is located on the left cab side (see Figure 5).

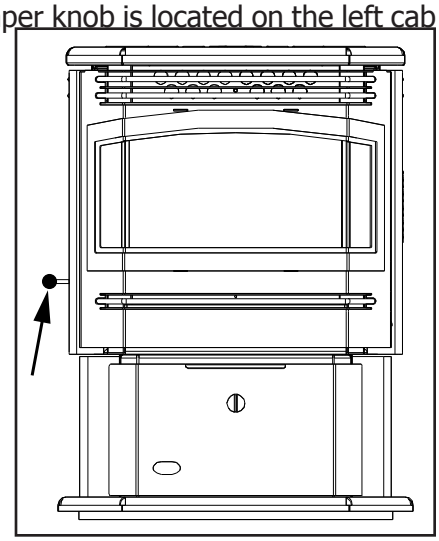

Figure 5: Slider / Damper Knob.

If the fire should happen to go out and the heat output indicator has been set on the lowest setting, the Slider Damper should be pushed in slightly, decreasing the air in the firebox.

If, after long periods of burning, the fire builds up and overflows the burn pot or there is a build up of clinkers, this would be a sign that the pellet quality is poor, this requires more primary air, the slider damper must be pulled out to compensate. Pulling the slider damper out gives the fire more air.

The easiest way to make sure that an efficient flame is achieved is to understand the characteristics of the fire.

- A tall, lazy flame with dark orange tips requires more air – Open slider (pull out) slightly.
- A short, brisk flame, like a blowtorch, has too much air – Close slider (push in) slightly.
- If the flame is in the middle of these two characteristics with a bright yellow/orange, active flame with no black tips then the air is set for proper operation, refer to Figure 6.

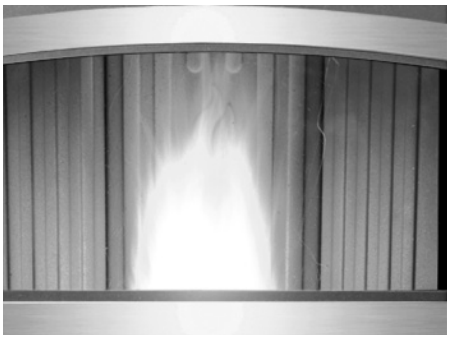

Figure 6: Efficient Flame.

The combustion exhaust blower is a variable speed blower controlled by the heat output button. This blower will decrease the vacuum pressure inside the stove and as the heat output button is turned down.

SPECIAL NOTES:

Pellet quality is a major factor in how the Pellet stove will operate. If the pellets have a high moisture content or ash content the fire will be less efficient and has a higher possibility of the fire building up and creating clinkers (hard ash build-up).

Taking a reading of vacuum pressure inside the firebox with a magnehelic gauge can be used to set the slider for best combustion. The slider damper should be set only on a hot stove (operating for thirty (30) minutes or more) by placing a Magnahelic Pressure Gauge in the firebox. The reading can be taken from the ⅛" (3 mm) hole located in the front of the firebox under the door (see Figure 7). **The best settings are a reading of approximately 0.13 inches of water column on the high fire setting. Some fuels may require higher or lower settings.**

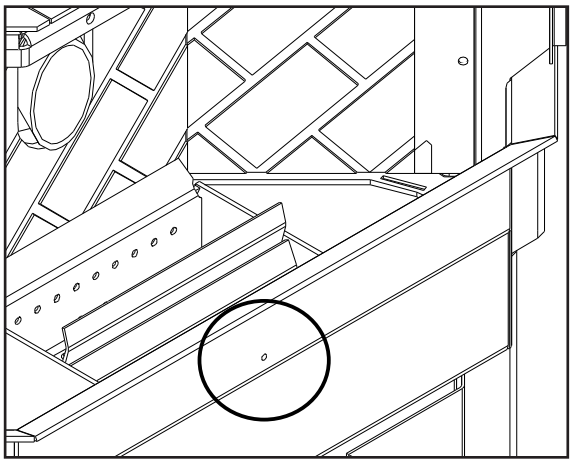

Figure 7: Hole for Pressure test with Magnehelic Gauge.

Guidelines For Fine-Tuning For Fuel Quality:

Due to fuel quality the slider damper and control board trims may need to be fine-tuned.

1. If the unit builds up on all settings, the slider damper rod should be pulled out in small increments to give the unit more air.
2. If the unit has excesses ash build-up in the liner on the lower feed settings, the Combustion Blower Trim should be increased one setting at a time until the problem improves (Factory Setting is #2).
3. If the fire is going out on low because the airflow is too great, the Combustion Blower Trim can be lowered to the #1 setting.
4. If the stove has excesses ash build-up in the liner on the higher settings the Feed Rate Trim should be trimmed down a setting at a time until the problem improves (Factory setting is #4).
5. If you need more heat and the fuel has long pellets, the majority are over 1" (2.5cm) in length, the Feed Rate Trim can be moved up to the #5 setting. NOTE: Only do this if the fuel burns without building up.

Routine Cleaning and Maintenance

The following list of components should be inspected and maintained routinely to ensure that the appliance is operating at its optimum and giving you excellent heat value:

2-3 Days / Weekly	Semi-annually or 2 Tons of Fuel
Burn Pot and Liner	Exhaust Vent
Ash Pan	Fresh air Intake Tube
Inside Firebox	Blower Mechanisms
Door Glass	Heat exchanger tubes
Heat exchanger tubes	Behind firebox liners
Ash pan and Door gaskets	All Hinges
Door Latch	Post Season Clean-up

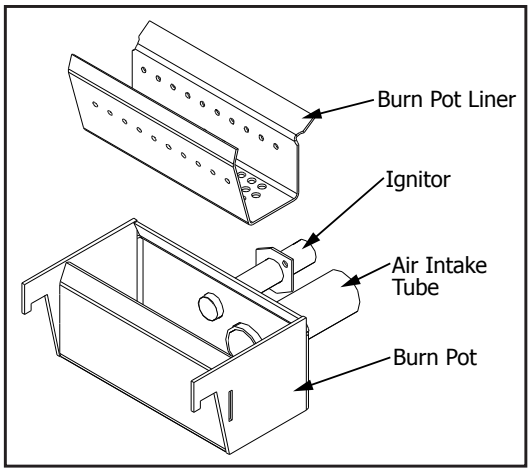

Figure 8: Burn pot assembly.

TOOLS REQUIRED TO CLEAN UNIT

- Torx T-20 Screwdriver
- Brush
- Soft Cloth
- 5/16" Wrench or Socket
- Vacuum with fine filter bag

BURN POT AND LINER (2-3 days)

Cleaning of the burn pot and liner must only be done when stove is cold. To remove the burn pot and burn pot liner, open the door using the door handle provided (located on the right-hand side of the stove). Swing the door open. Lift the liner from the burn pot. Lift the burn pot from the firebox by gently lifting up the front of the burn pot, then sliding the assembly from the air intake tube and the ignitor cartridge.

This is the 'pot' where the pellets are burned. Every two (2) to three (3) days (when the unit is cold), remove the burn-pot liner from the stove and inspected it to ensure proper air flow through the liner. **Failure to keep the liner clean may cause a build up of fuel past the burn pot liner and up the drop tube. This will cause the auger to jam and may result in pellets burning in the drop tube and hopper**. Using a metal scrapper, remove material that has accumulated or is clogging the liner's holes. Then dispose of the scrapped ashes from the liner and from inside the burn-pot. Place the burn-pot back into the stove, making sure that the pipes are properly inserted into the burn pot. Place the liner back into the burn-pot, making sure that the ignitor hole in the liner is aligned with the ignitor tube. Pushing the liner up against the ignitor tube.

If, after long periods of burning, the fire continually builds up and overflows the burn pot or there is a build up of clinkers, this is an indication that the pellet fuel quality is poor or the stove may need cleaning. Check the stove for ash build up (clean if required) and adjust the slider / damper to produce the proper clean combustion.

DOOR GLASS CLEANING (2-3 days)

Cleaning of the glass must only be done when stove is cold. Open the door by lifting the handle. The glass can be cleaned by wiping down the outside and inside of the glass with a dry soft cloth.

If the glass has build up that can not be removed with only the cloth, clean the glass using paper towel and a gas appliance glass cleaner, this may be purchased through most dealers. If a gas appliance glass cleaner is not available, use a damp paper towel dipped in fly ash to clean the glass. After the glass has been cleaned use the dry soft cloth to wiping down the outside and inside of the glass

DOOR LATCH (2-3 days)

Check the door latch every time the door is opened or closed to ensure proper movement.

Routine Cleaning and Maintenance

ASH PAN AND DOOR GASKETS (weekly)
After extended use the gasketing may come loose. To repair this, glue the gasketing on using high-temperature fiberglass gasket glue available from your local ENVIRO dealer. This is important to maintain an airtight assembly.

ASH PAN (weekly)

The ash pan is located under the burner. Dump the ashes into a metal container stored away from combustibles. Monitor the ash level every week. Remember that different pellet fuels will have different ash contents. Ash content is a good indication of fuel efficiency and quality. Refer to "Introduction - Safety Warnings And Recommendations" for disposal of ashes.

Freestanding: To remove the ash pan, simply turn the knob and pull out towards the front.

Insert: To remove the ash pan open the door, remove the burn pot liner and the burn pot, then pull the ash pan out.

DO NOT PLACE UNBURNED OR RAW PELLET FUEL IN ASH PAN.

HEAT EXCHANGER TUBES (weekly)

Open the door and the rod is located under the unit top, in the center of the stove just behind the door (see Figure 9). This handle is to be pushed in and out a few times **(ONLY WHEN THE UNIT IS COLD)** in order to clean away any fly ash that may have collected on the heat exchanger tubes. As different types of pellets produce different amounts of ash, cleaning of the tubes should be done on a regular basis to enable the unit to run efficiently.

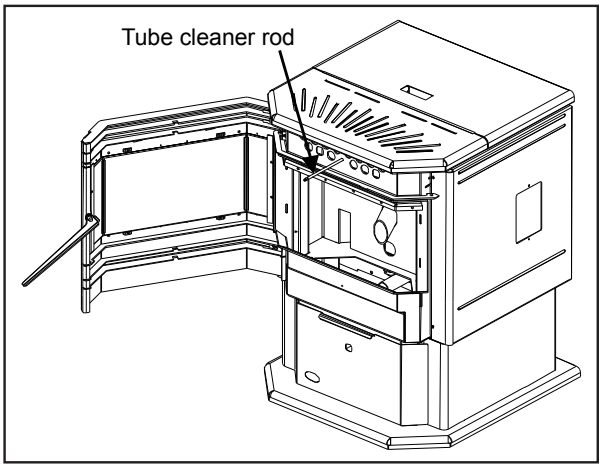

Figure 9: Heat Exchanger Tube Cleaner.

FRESH AIR INTAKE (season)

Inspect periodically to be sure that it is not clogged with any foreign materials.

EXHAUST VENT (season)

This vent should be cleaned every year or after two (2) tons of pellets. We recommend contacting your dealer for professional cleaning. To clean the vent pipe, tap lightly on the pipe to dislodge any loose ash. Open the bottom of the "T" to dump the ash, then vacuum as much of the ash out of the vent pipe as possible.

BLOWER MECHANISMS (season)

Unplug the stove then open the right and left side panels to access the two blowers. Vacuum all dust from motors. DO NOT lubricate the motors. Check gaskets and replace if needed.

ALL HINGES (season)

Check all the hinges on the unit to ensure proper movement.

Routine Cleaning and Maintenance

EXHAUST PASSAGES (season)

Removal of the firebox backing for bi-annual cleaning (refer to Figure 10):

- Open the door by lifting the handle, remove the burn pot and burn pot liner.
- Lubricate all screws with penetrating oil.
- Remove the four (4) screws that hold the steel liner retainers in place. Remove side steel liners by sliding them forward then out.
- Pull the center panel out.
- Vacuum and clean thoroughly.

Installation of firebox backing:

- Insert center panel with backing.
- Place the two (2) side panels back into the firebox and reinstall the two (2) retainers using two (2) screws on each side.
- Replace the burn pot and burn pot liner
- Close the glass door and secure.

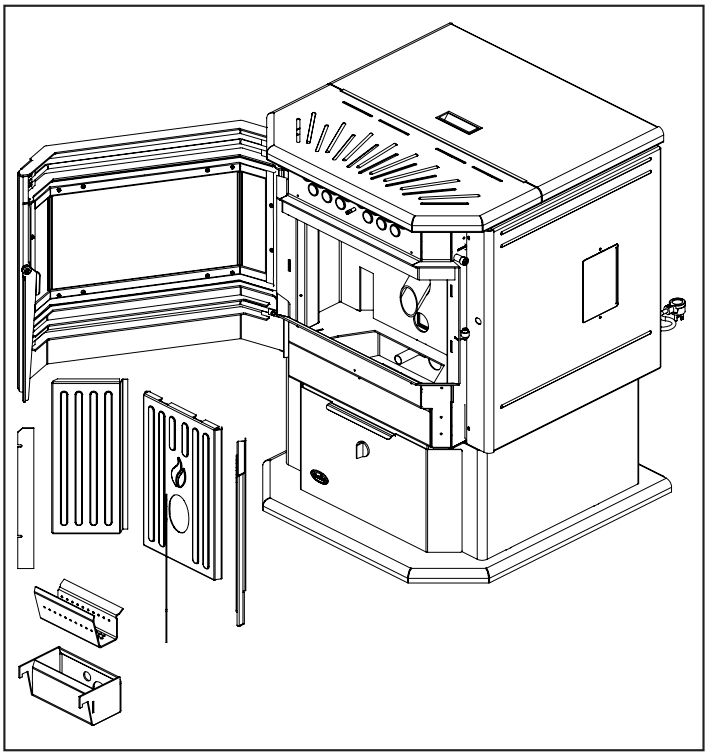

Figure 10: Firebox Components Removal.

POST SEASON CLEAN-UP

Once you are finished using the pellet appliance for the season, unplug the stove for added electrical protection. It is very important that the stove be cleaned and serviced as stated above.

CLEANING PLATED SURFACES

Painted surfaces should be wiped with a damp cloth periodically.

It is important to note that fingerprints and other marks can leave a permanent stain on plated finishes. To avoid this, give the surface a quick wipe with denatured alcohol on a soft cloth BEFORE lighting the fireplace. Never clean surfaces when they are hot. Do not use other cleaners or abrasives as they may leave a residue or scratches, which can become permanently etched into the surface.

FIREBOX PANEL

The paint on the steel firebox panels may peel. This is due to extreme conditions applied to the paint and is in no way covered by warranty.

REPLACING DOOR GLASS

It is recommended that your ENVIRO dealer replace the glass if broken.

The door glass is made of high temperature PYRO CERAMIC 5 mm thick. The center panel is 15.4” x 9.0” (39.0 cm x 22.9 cm) and side panels are 2.6 x 9.0 inches (6.7 cm x 22.9 cm). They must be replaced with (Part # EF-062). Substitute materials will not be permitted.

Installation

Deciding Where to Locate your Pellet Appliance:

1. Check clearances to combustibles (see Installation - Clearances to Combustibles - Freestanding, Installation - Alcove Clearances - Freestanding, and Installation - Clearances to Combustibles - Fireplace Insert.
2. Do not obtain combustion air from an attic, garage or any unventilated space. Combustion air may be obtained from a ventilated crawlspace.
3. Do not install the stove in a bedroom.
4. You can vent the stove through an exterior wall behind the unit or connect it to an existing masonry or metal chimney (must be lined if the chimney is over 6" (15 cm) diameter, or over 28 inches² (180 cm²) cross sectional area). An interior vent can be used with approved pipe passing through the ceiling and roof.
5. Locate the stove in a large and open room that is centrally located in the house. This will optimize heat circulation.
6. The power cord is 8 feet (2.43 m) long and may require a grounded extension cord to reach the nearest electrical outlet.

NATIONAL FIREPLACE INSTITUTE
NFI
CERTIFIED
www.nficertified.org

We recommend that our pellet hearth products be installed and serviced by professionals who are certified in the U.S. by the National Fireplace Institute® (NFI) as NFI Pellet Specialists or who are certified in Canada by Wood Energy Technical Training (WETT).

Wood Energy Technical Training
www.wettinc.ca

Removing Pellet Stove From Pallet:

To remove your new stove from its pallet, remove the two (2) screws securing the bottom to the pallet.

Freestanding: One screw can be easily seen from behind but to access the second screw the ashpan must be removed.

Fireplace Insert: There is one screw on either side of the bottom.

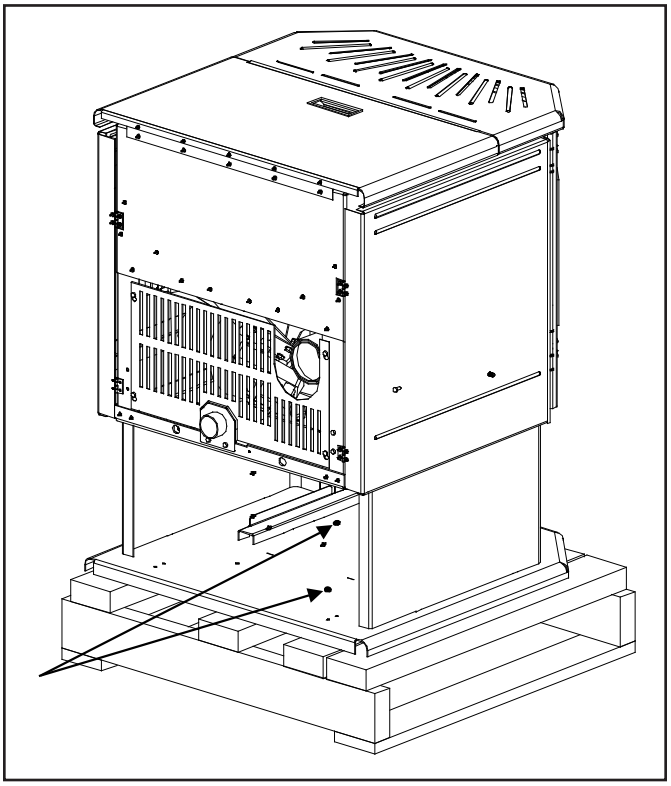

Figure 11: Removing Freestanding Stove From the Pallet.

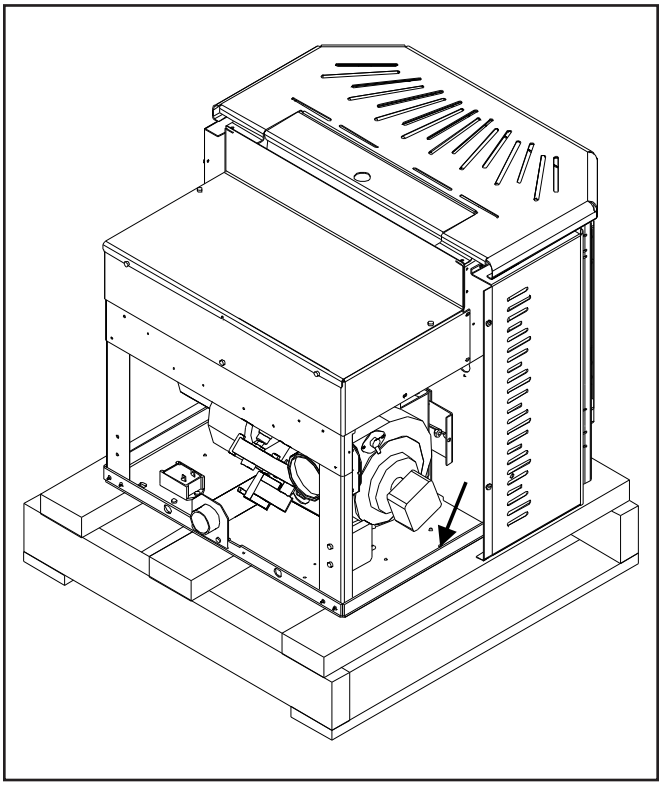

Figure 12: Removing Insert Stove From the Pallet.

Dimensions - Freestanding:

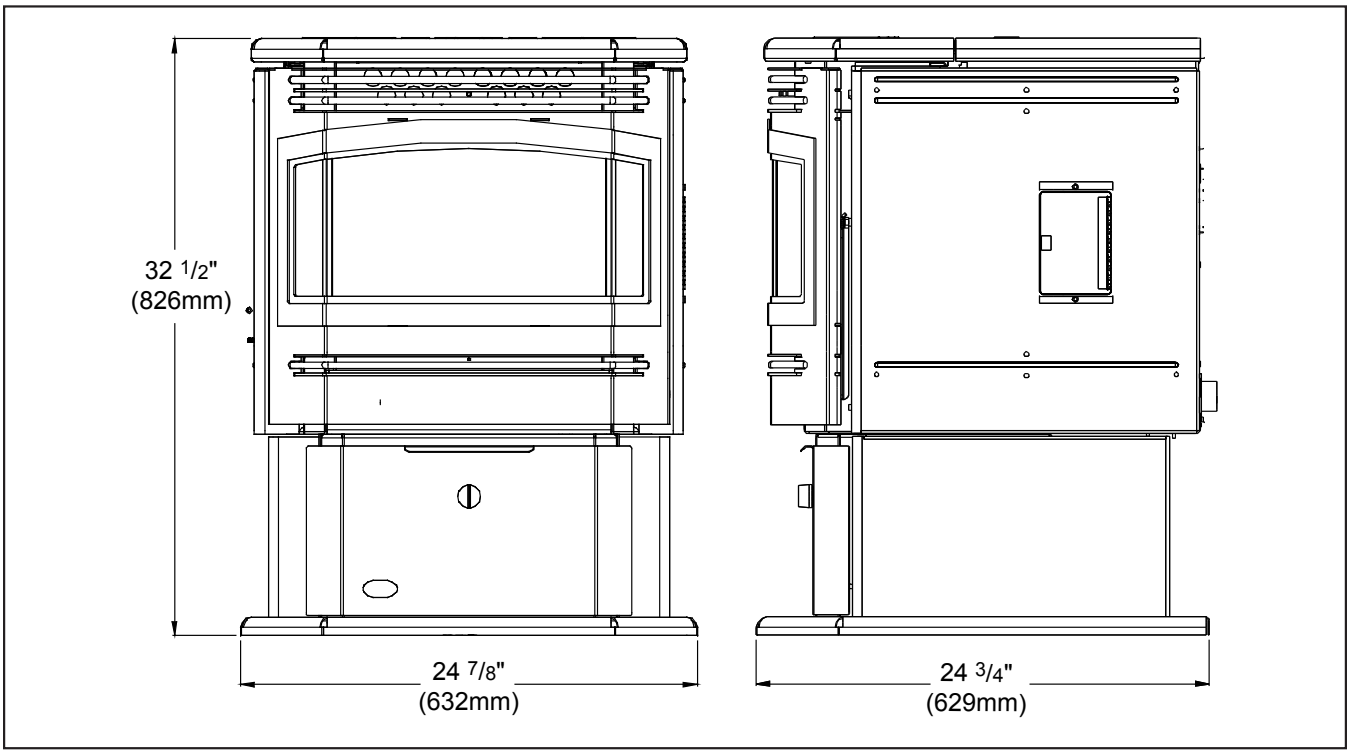

Figure 13: Meridian Freestanding Dimensions.

Dimensions - Fireplace Insert:

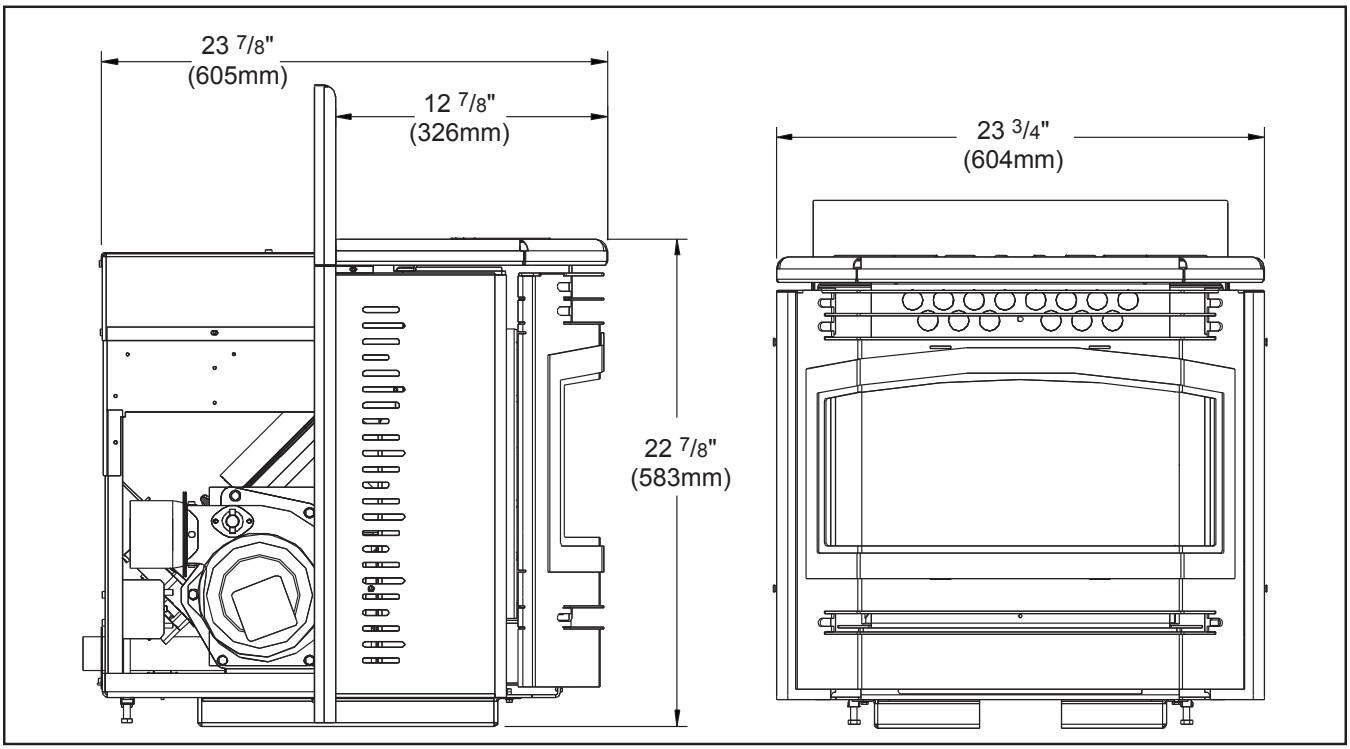

Figure 14: Meridian Fireplace Insert Dimensions.

Clearances to Combustibles - Freestanding:

These dimensions are minimum clearances but it is recommended that you ensure sufficient room for serving, routine cleaning and maintenance.

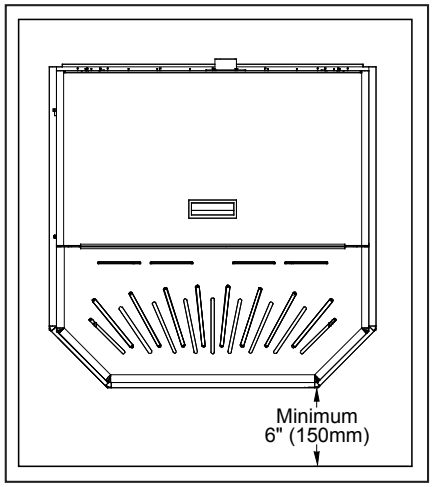

Figure 15: Meridian on Floor Protection.

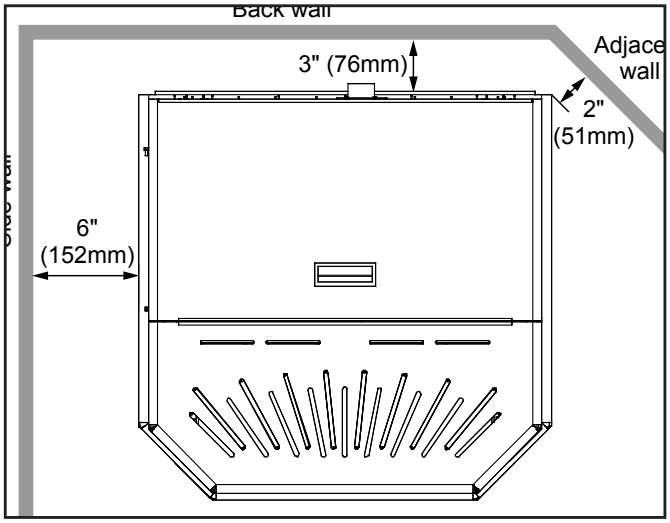

Figure 16: Minimum Clearances to Combustibles for Freestanding Meridian.

This pellet stove requires floor protection. The floor protection must be non-combustible, extending beneath the stove the full width and depth of the unit including 6" (150 mm) in front for ember protection.

Alcove Clearances - Freestanding:

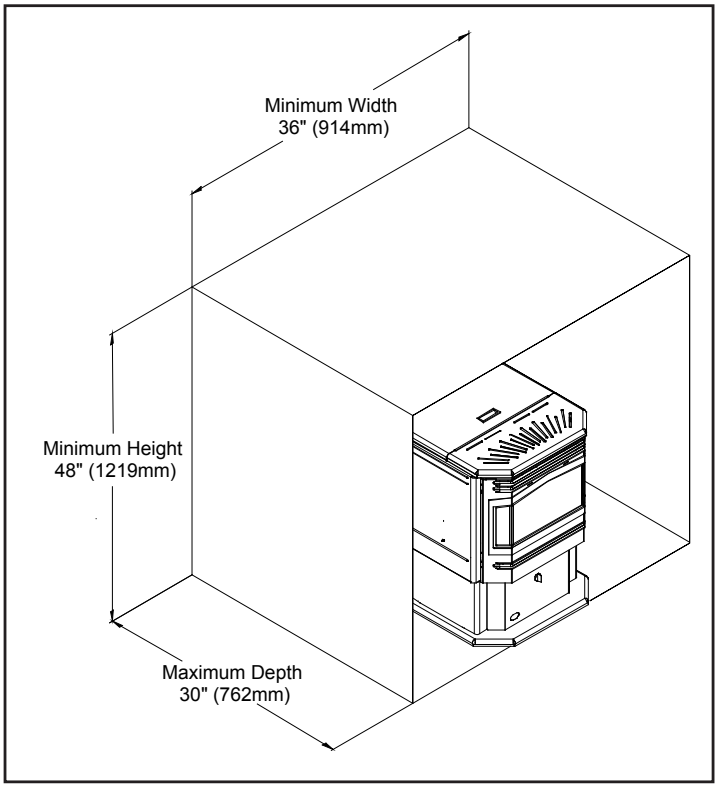

Figure 17: Alcove Clearances Freestanding Meridian.

Installation

Clearances to Combustibles - Fireplace Insert:

The fireplace insert must be installed into a masonry fireplace. This model includes a surround faceplate and a pedestal. When installing this unit, ensure that the pedestal is removed from the inside of the hopper and installed on the bottom of the unit. Refer to Installation - Installation of Pedestal and Leveling Legs - Fireplace Insert and Installation - Installing Hopper Cover and Adjusting Hopper Height - Fireplace Insert before proceeding.

From the body of the heater to the side wall:	8 inches (203 mm) minimum
From the body of the heater to the Facing on masonry fireplace:	8 inches (203 mm) minimum
From the body of the heater to the 8" (203 mm) mantle:	8 inches (203 mm) minimum

Installation of Pedestal and Leveling Legs - Fireplace Insert:

There are two parts to the Meridian insert pedestal and they can be found inside the hopper. Place unit on its back. Two (2) hex head screws are used on each side of the pedestal (refer to Figure 19). Using a 5/16" wrench or socket attach the pedestal to the bottom of the unit.

OPTIONAL:

There are two (2) leveling legs and they can be found inside the manual bag. Each leveling leg consists of a long bolt, a hex nut, a washer, and a square bolt with clip (see Figure 18). For installation of the leveling legs the unit should be on its back and a ½" wrench is required for adjustments.

Install the square bolts into the square holes in the back corners of the bottom. The square bolt should be inserted from inside the unit so that the clip will be facing up.

Thread hex nut onto the bolt till it is approximately 1" (25 mm) from the bolt head, slide washer onto bolt. Thread the bolt into the square nut so length of the bolt shown is the approximately height needed for leveling. When the unit is up right and the bolts can be adjusted to the exact height required. To lock the bolts at a height tighten the hex nut and washer against the square bolt

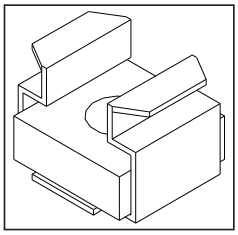

Figure 18: Square Bolt.

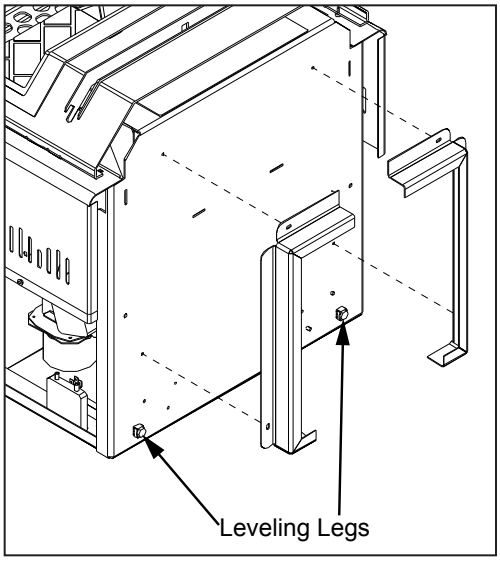

Figure 19: Installing Pedestal.

Installing Hopper Cover and Adjusting Hopper Height - Fireplace Insert:

The hopper cover initially comes upside-down on top of the hopper. To install the hopper cover flip the cover over and fasten in place with four T-20 screws (see Figure 20).

The back height of this unit can be set to one (1) of three (3) heights; 19" (483 mm), 21⅛" (537 mm), 22¼" (565 mm). The hopper should be set to the maximum height that can be used in the installation.

To change the height of the hopper back up or down, remove the seven (7) T-20 screws, three (3) on each side and one (1) on the back. The screw placement is shown Figure 21. Move the hopper assembly to the required setting and replace the screws. When the hopper back is in place it is recommended that silicone is used to seal the bottom lip of the hopper back and sides

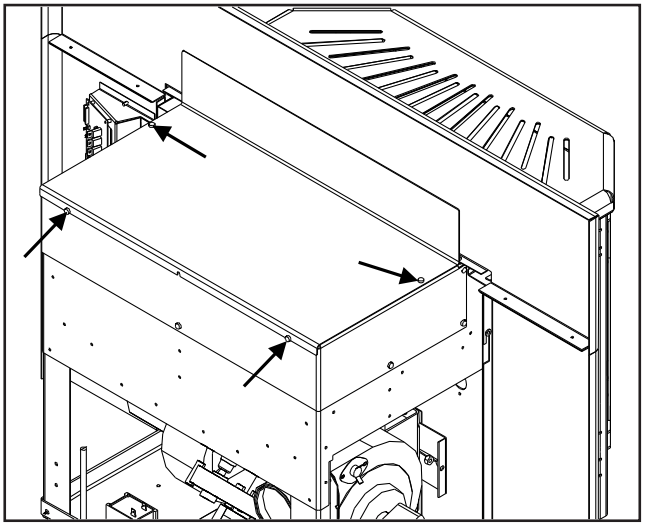

Figure 20: Hopper Cover Screw Placement.

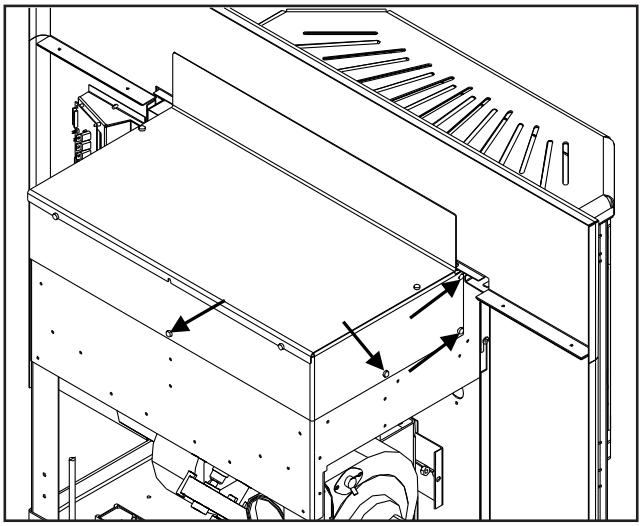

Figure 21: Hopper Extension Screw Placement.

Mobile Home Installation - Freestanding:

- Secure the heater to the floor using the holes in the pedestal of the appliance.
- Ensure the unit is electrically grounded to the chassis of your home (permanently).

WARNING: Do not install in a room people sleep in.

CAUTION: The structural integrity of the manufactured home floor, wall and ceiling/roof must be maintained

• Outside fresh air is mandatory. Secure outside air connections directly to fresh air intake pipe and secure with three (3) screws evenly spaced.

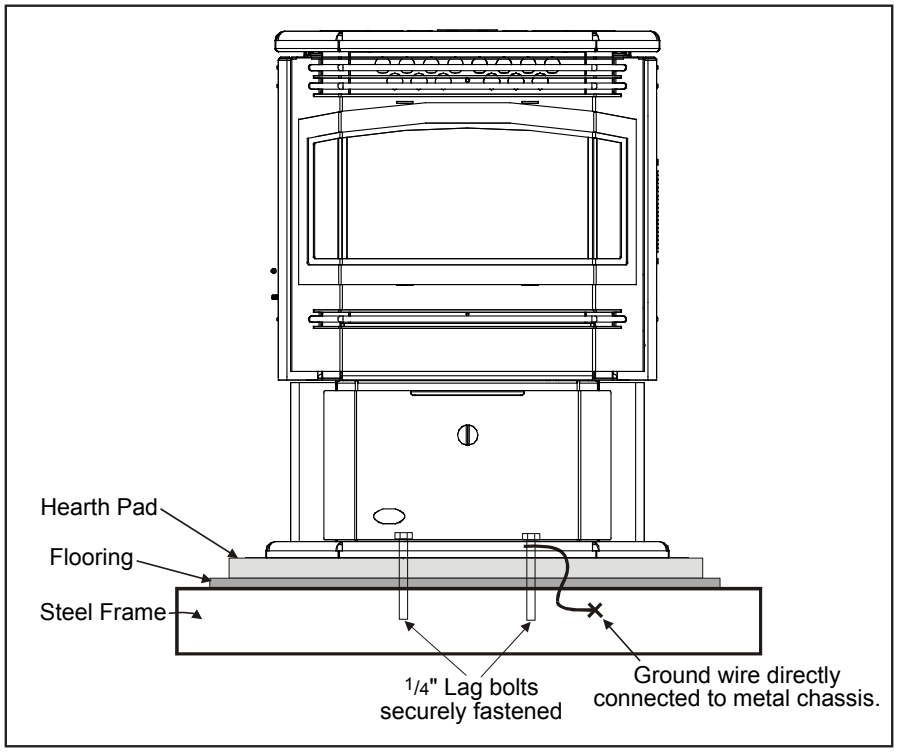

Figure 22: Mobile Home Install Mounting.

Vent Termination Requirements:

IT IS RECOMMENDED THAT YOUR PELLET STOVE BE INSTALLED BY AN AUTHORIZED DEALER/INSTALLER.

Table 1: Use in conjunction with Figure 13 for allowable exterior vent termination locations.

Letter	Minimum Clearance	Description
A	24 in (61 cm)	Above grass, top of plants, wood, or any other combustible materials.
B	48 in (122 cm)	Beside/below any door or window that may be opened. (18" (46 cm) if outside fresh air installed.)
C	12 in (30 cm)	Above any door or window that may be opened. (9" (23 cm) if outside fresh air installed.)
D	24 in (61 cm)	To any adjacent building, fences and protruding parts of the structure.
E	24 in (61 cm)	Below any eave or roof overhang
F	12 in (30 cm)	To outside corner.
G	12 in (30 cm)	To inside corner, combustible wall (vertical and horizontal terminations).
H	3 ft (91 cm) within a height of 15 ft (4.5 m) above the meter/regulator assembly	To each side of center line extended above natural gas or propane meter/ regulator assembly or mechanical vent.
I	3 ft (91 cm)	From any forced air intake of other appliance
J	12 in (30 cm)	Clearance to non-mechanical air supply inlet to building, or the combustion air inlet to any appliance.
K	24 in (61 cm)	Clearance above roof line for vertical terminations.
L	7 ft (2.13 m)	Clearance above paved sidewalk or paved driveway located on public property.

1. Do not terminate the vent in any enclosed or semi-enclosed areas such as a carport, garage, attic, crawlspace, narrow walkway, closely fenced area, under a sundeck or porch, or any location that can build up a concentration of fumes such as stairwells, covered breezeway, etc.

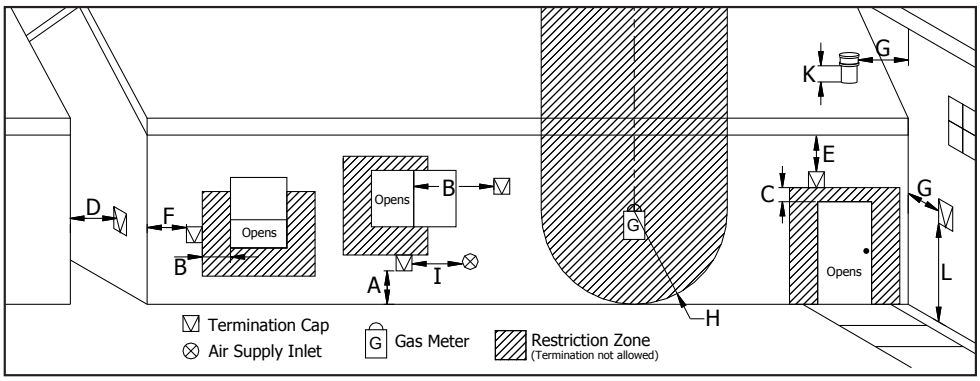

Figure 23: Use in conjunction with Table 1 for allowable exterior vent termination locations.

2. Vent surfaces can become hot enough to cause burns if touched by children. Non-combustible shielding or guards may be required.
3. Termination must exhaust above the inlet elevation. It is recommended that at least five feet of vertical pipe be installed outside when the appliance is vented directly through a wall, to create some natural draft to prevent the possibility of smoke or odor during appliance shut down or power failure. This will keep exhaust from causing a nuisance or hazard from exposing people or shrubs to high temperatures. In any case, the safest and preferred venting method is to extend the vent through the roof vertically.
4. Distance from the bottom of the termination and grade is 12" (30 cm) minimum. This is conditional upon the plants and nature of grade surface. The exhaust gases are hot enough to ignite grass, plants and shrubs located in the vicinity of termination. The grade surface must not be lawn.
5. If the unit is incorrectly vented or the air to fuel mixture is out of balance, a slight discoloration of the exterior of the house might occur. Since these factors are beyond the control of Sherwood Industries Ltd, we grant no guarantee against such incidents.

NOTE: Venting terminals shall not be recessed into walls or siding.

EXHAUST AND FRESH AIR INTAKE LOCATIONS:

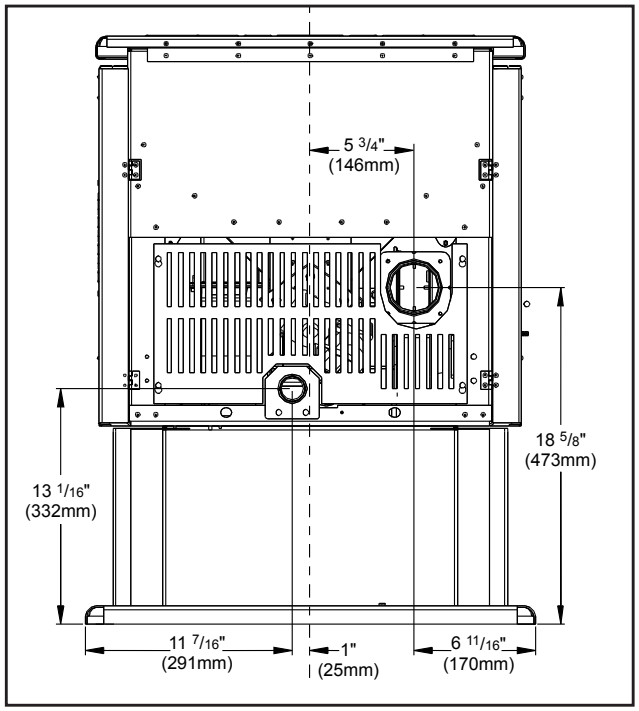

Figure 24: Meridian Freestanding Inlet and Outlet Location.

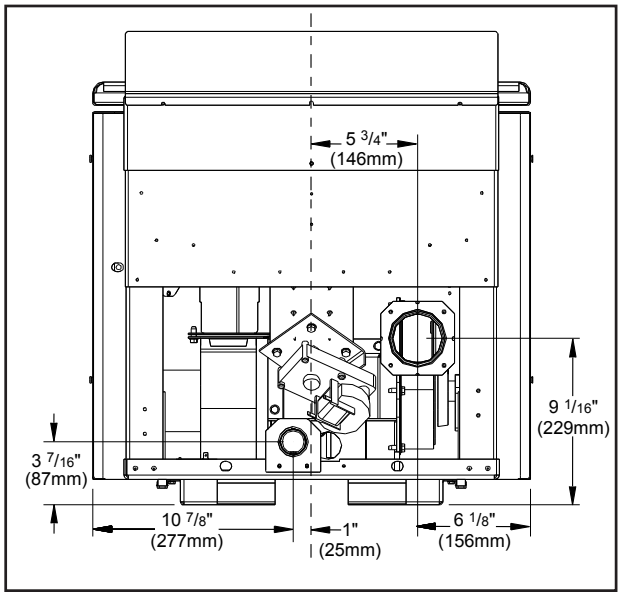

Figure 25: Meridian Insert Inlet and Outlet Location.

EXHAUST	**Freestanding**		**Insert**	
Base of unit to center of flue	18 5/8"	(473 mm)	9 1/16"	(229 mm)
Side of unit to center of flue	6 11/16"	(170 mm)	6 1/8"	(156 mm)
Center of unit to center of flue	5 3/4"	(146 mm)	5 3/4"	(146 mm)
FRESH AIR INTAKE.				
Base of unit to center of intake	13 1/16"	(332 mm)	3 7/16"	(87 mm)
Side of unit to center of intake	11 7/16"	(291 mm)	10 7/8"	(277 mm)
Center of unit to center of flue	1"	(25 mm)	1"	(25 mm)

INSTALL VENT AT CLEARANCES SPECIFIED BY THE VENTING MANUFACTURER

OUTSIDE FRESH-AIR CONNECTION:

Outside fresh air is mandatory when installing this unit in airtight homes and mobile homes.

A Fresh-air intake is strongly recommended for all installations. Failure to install intake air may result in improper combustion as well as the unit smoking during power failures.

When connecting to an outside fresh air source, do not use plastic or combustible pipe. A 2" minimum (51 mm) ID (inside diameter) steel, aluminum or copper pipe should be used. It is recommended, when you are installing a fresh air system, to keep the number of bends in the pipe to a minimum.

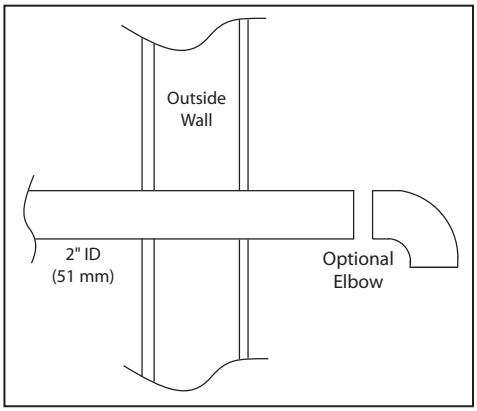

Figure 26: Outside Air Connection.

Corner Through Wall Installation - Freestanding:

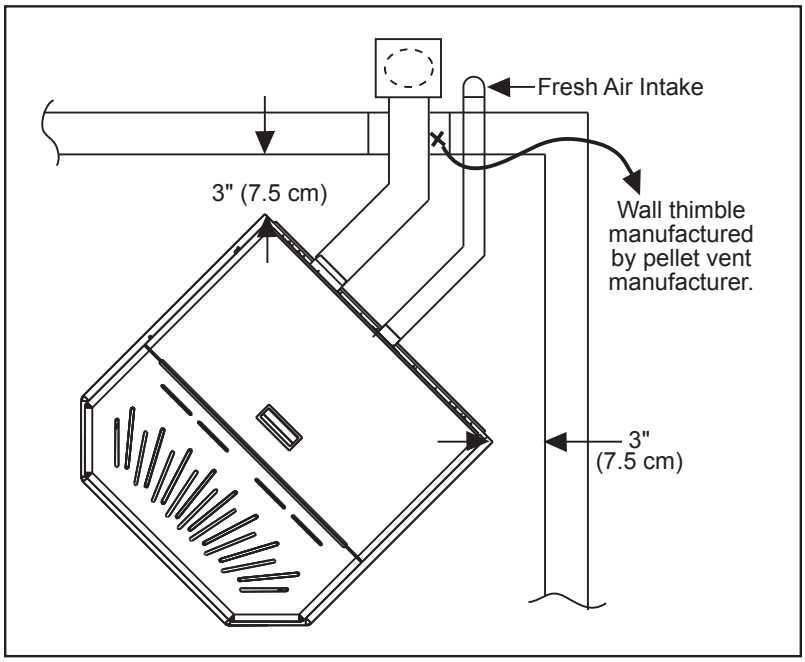

Figure 27: Corner Installation.

Horizontal Exhaust Through Wall Installation - Freestanding:

Vent installation: install vent at clearances specified by the vent manufacturer.

A chimney connector shall not pass through an attic or roof space, closet or similar concealed spaces, or a floor, or ceiling. Where passage through a wall or partition of combustible construction is desired, the installation shall conform to CAN/CSA-B365 Installation Code for Solid-Fuel-Burning Appliances and Equipment. Only use venting of L or PL type with an inside diameter of 3 or 4 inches (7.6 or 10.1 cm).

1. Choose a location for your stove that meets the requirements stated in this manual and allows installation with the least amount of interference to house framing, plumbing, wiring, etc.
2. Install a non-combustible hearth pad (where necessary).
3. Place the appliance 15” (37.5 cm) away from the wall. If the stove is to be set on a hearth pad, set the unit on it.
4. Locate the center of the exhaust pipe on the stove. Extend that line to the wall. Once you have located the center point on the wall, refer to pellet vent manufacturer installation instructions for correct hole size and clearance to combustibles.
5. Install the wall thimble as per the instructions written on the thimble. Maintain an effective vapour barrier in accordance with local building codes.
6. Install a length of 3” (76 mm) or 4” (101 mm) vent pipe into the wall thimble. The pipe should install easily into the thimble.
7. Install the fresh air intake (see Installation - Outside Fresh Air Connection).
8. Connect the exhaust vent pipe to the exhaust pipe on the stove. Seal the connection with high temperature silicone.
9. Push the stove straight back, leaving a minimum of 2” (5 cm) clearance from the back of the stove to the wall. Seal the vent pipe to the thimble with high temperature silicone.

10. The pipe must extend at least 12" (30 cm) away from the building. If necessary, bring another length of pipe (PL type) to the outside of the home to connect to the first section. Do not forget to place high temperature silicone around the pipe that passes through the thimble.

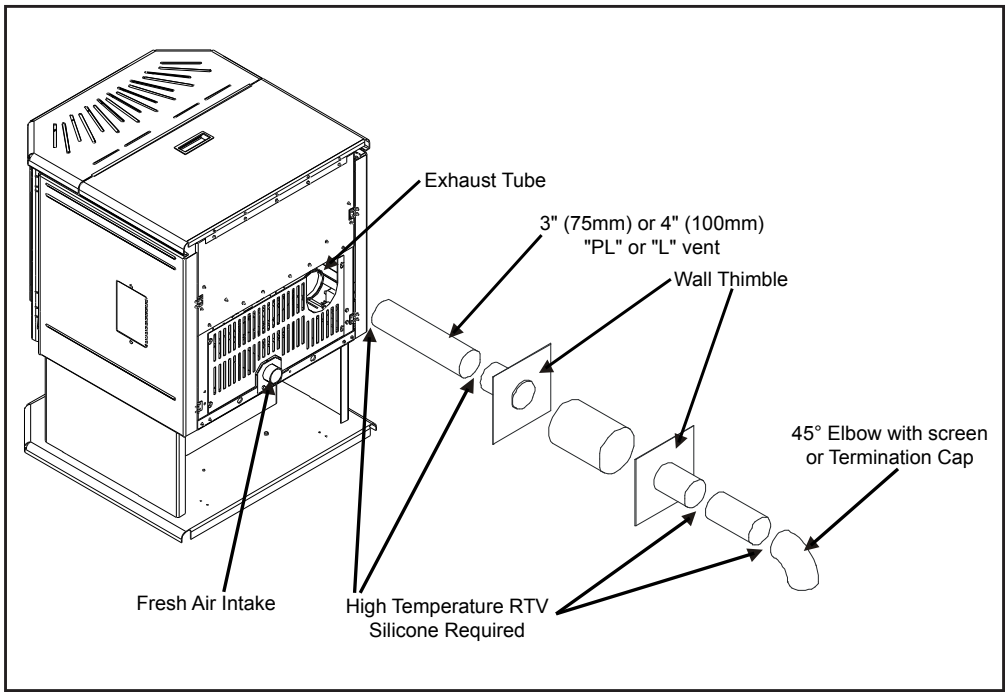

Figure 28: Straight through wall Installation.

11. Install a vertical pipe, or if all requirements for direct venting are met, install vent termination. The stainless steel cap termination manufactured by the vent manufacturer is recommended. However, when the vent terminates several feet above ground level and there are no trees, plants, etc. within several feet, a 45° elbow can be used as termination. The elbow must be turned down to prevent rain from entering.

NOTE:

- Some horizontal through wall installations may require a "T" and 3 to 5 feet (91 to 152 cm) of vertical pipe outside the building to help naturally draft in the unit.
- This may be required if a proper burn cannot be maintained, after the stove has been tested and the airflow set.
- This is due to the back pressure in the exhaust caused by airflow around the structure.
- All sections of pipe must have three (3) screws evenly spaced and all horizontal and vertical vent sections located within the house must have a bead of high temperature silicone installed on the male end of the pipe before installation to create a gas tight seal.
- The termination must be 12 inches (30 cm) from the outside wall and 12 inches (30 cm) above the ground.
- A 45° elbow with a rodent screen may be used in place of the termination cap (or stainless steel termination hood).

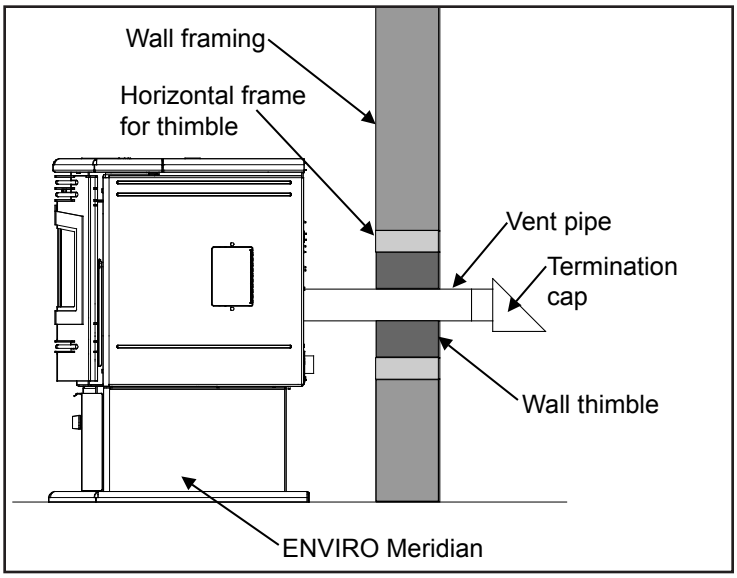

Figure 29: Straight through Wall Installation - Side View.

Vertical Rise with Horizontal Termination Installation (Recommended) - Freestanding:

A 45° elbow with a rodent screen may be used in place of the termination cap (or stainless steel termination hood).

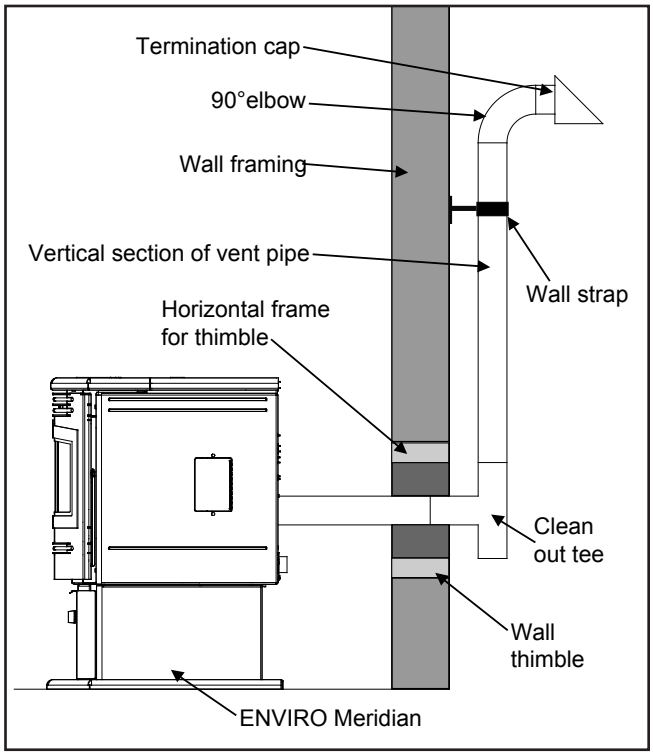

Figure 30: Through Wall with Horizontal Termination.

Through Concrete Wall With Vertical Rise Installations - Freestanding:

A 45° elbow with a rodent screen may be used in place of the termination cap (or stainless steel termination hood).

This is the recommended installation to use if there is a concrete or retaining wall in line with exhaust vent on pellet stove.

The termination must be 12 inches (30 cm) from the outside wall and 12 inches (30 cm) above the ground.

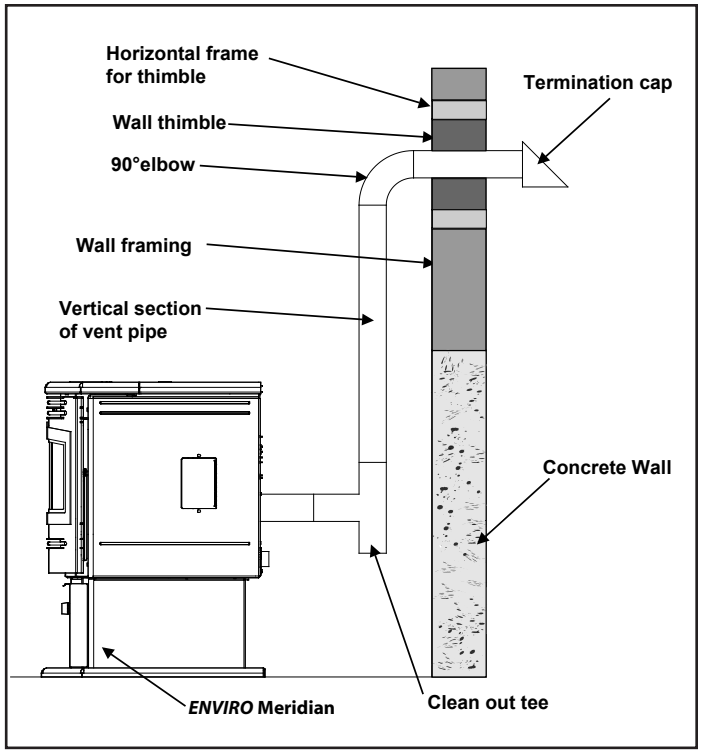

Figure 31: Vertical rise with Horizontal Termination.

Inside Vertical Installations - Freestanding:

1. Choose a stove location that is ideal. See the section "Installation - Deciding Where to Locate your Pellet Appliance."
2. Place the unit on the hearth pad (if installed on a carpeted surface) and space the unit in a manner so when the pellet vent is installed vertically, it will be 3" (76 mm) away from a combustible wall.
3. Locate the center of the fresh air intake pipe on the unit. Match that center with the same point on the wall and cut a hole about 2" (51 mm) in diameter.
4. Install the fresh air intake pipe.
5. Install the tee with clean out.
6. Install the pellet vent upward from there. When you reach the ceiling, make sure that the vent goes through the ceiling fire stop. Maintain a 3" (76 mm) distance to combustibles and keep attic insulation away from the vent pipe. Maintain an effective vapor barrier.
7. Finally, extend the pellet vent to go through the roof flashing.
8. Ensure that the rain cap is approximately 24" (610 mm) above the roof.

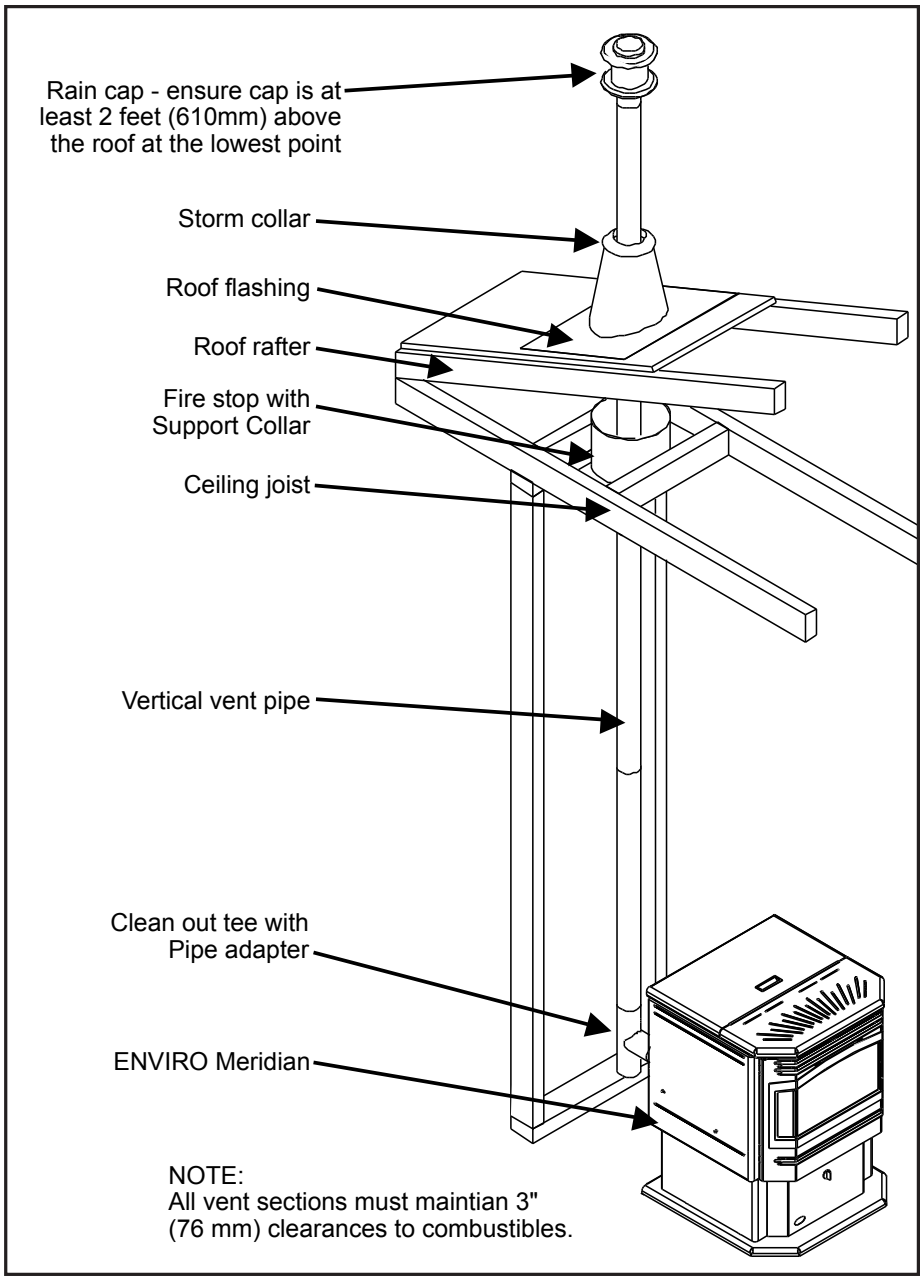

Figure 32: Inside Vertical Installation.

Outside Vertical Installations - Freestanding:

To accomplish a outside vertical pipe installation, follow steps 1 through 5 in the "Inside Vertical Installations - Freestanding" section and then finish it by performing the following (refer to Figure 33).

1. Install a tee with clean out on the outside of the house.
2. Install PL vent upward from the tee. Make sure that you install support brackets to keep the vent straight and secure.
3. Install ceiling thimble and secure the flashing as you go through the roof.
4. Ensure that the rain cap is approximately 24" (610 mm) above the roof.

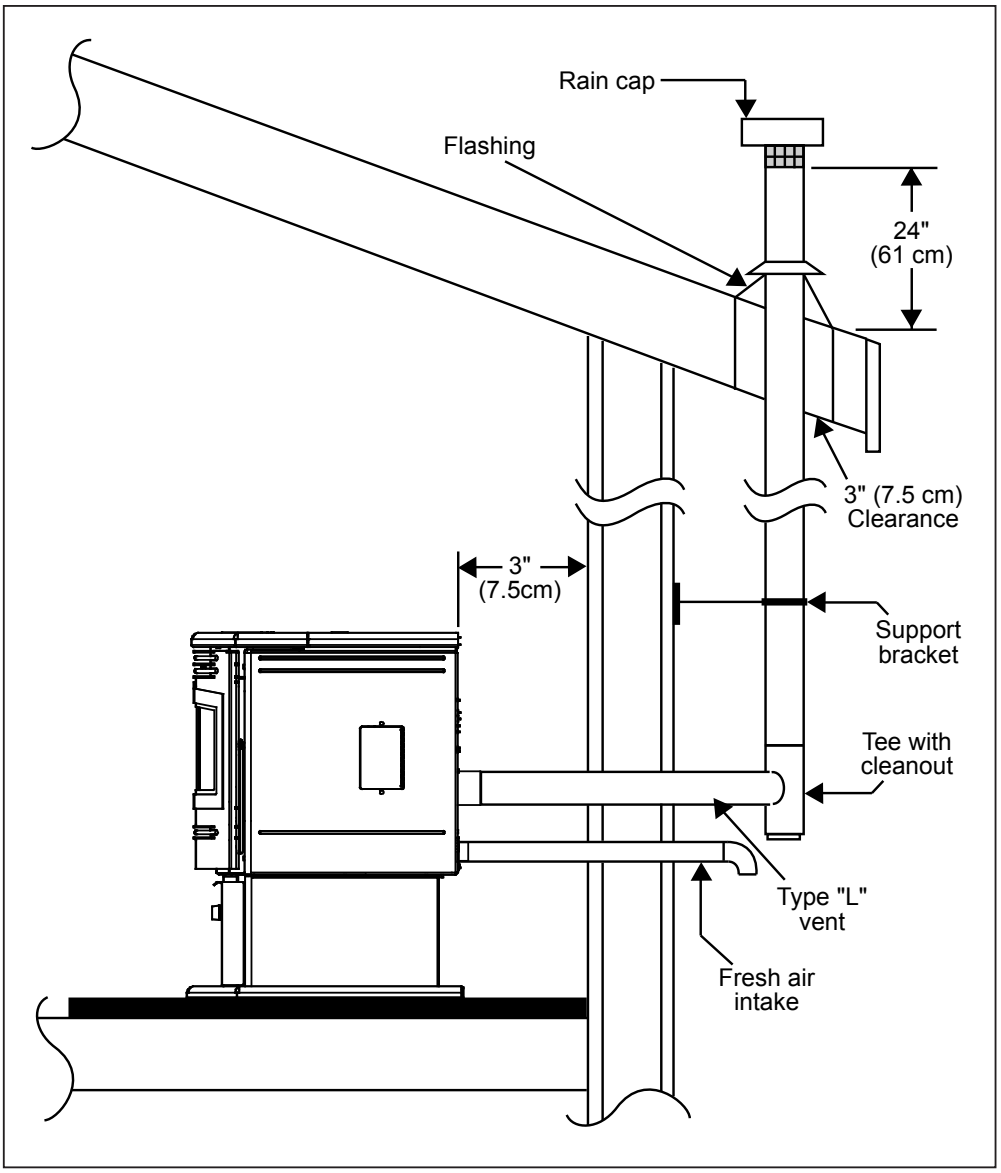

Figure 33: Outside Vertical Installation.

Hearth Mount Installation - Freestanding:

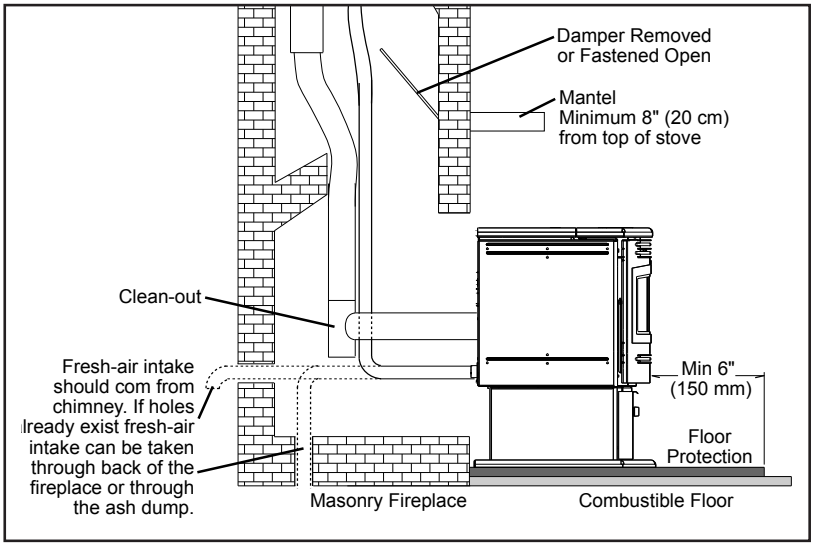

Figure 34: Hearth Mount - Side View.

1. Lock fireplace damper in the open position.
2. Install a positive flue connector at the fireplace dampers.
3. Connect a clean-out tee or a 90° elbow to the exhaust pipe.
4. Install flexible stainless steel liner or listed pellet vent to the top of the chimney.

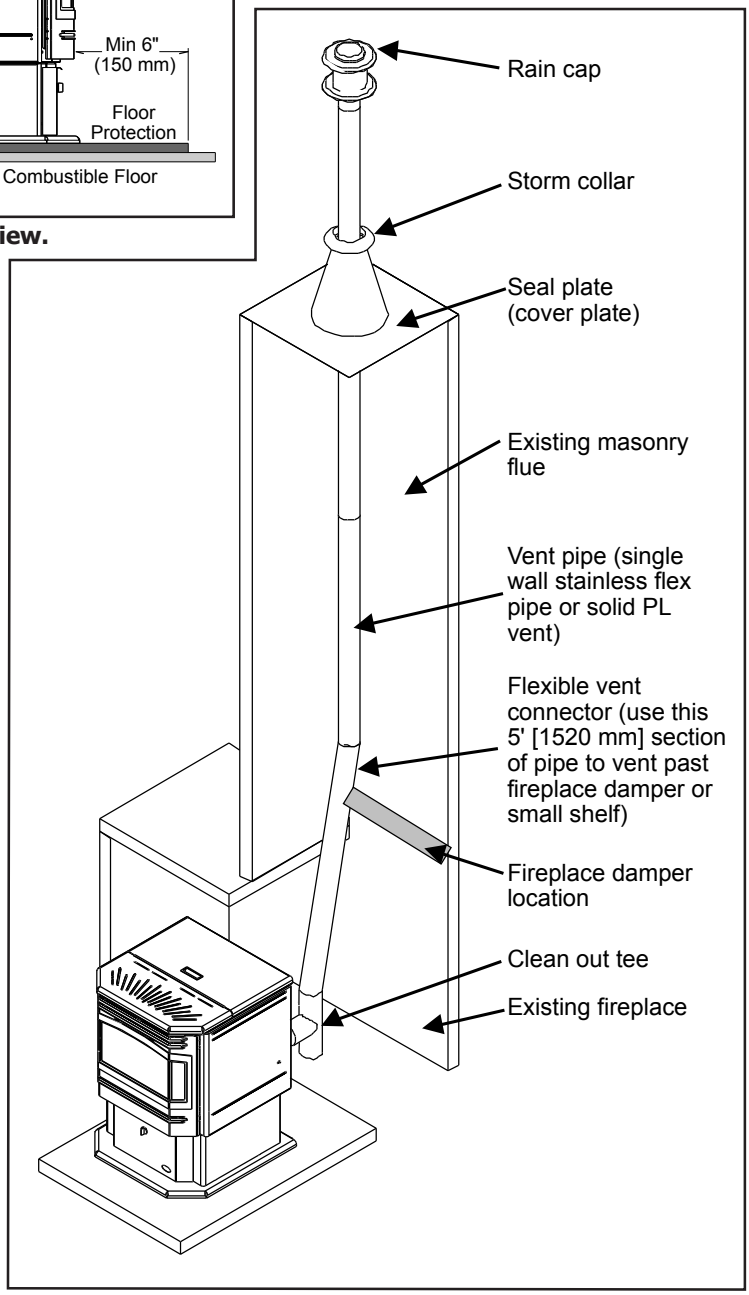

Figure 35: Hearth Mount - Over View.

Installation with Exterior Mounted Exhaust Blower - Freestanding:

The MERIDIAN can be equipped with an externally mounted exhaust blower (PART #20-070). This optional kit will include all components necessary to install the exhaust blower on any external vertical wall surface.

Choose a location for your stove that meets the requirements stated in this manual and allows installation with the least amount of interference to house framing, plumbing, wiring, etc.

Included in the exterior mounted exhaust blower kit are:
1 - Exhaust blower housing box.
1 - Blower cover plate.
1 - Hardware bag

1. Open the left side of the unit and the back grill and disconnect the Exhaust Blower wires from the harness. Remove the exhaust blower by undoing the six (6) ¼ hex head sheet metal screws that fasten the blower to the housing.
2. Remove the back grill from the exterior exhaust vent housing and remove the round cover plate installed on the blower housing.
3. Install the round cover plate over the gasketed opening in the stove where the exhaust motor was removed from.
4. Install the exhaust blower motor in the Exterior Vent Housing Box onto the exhaust blower housing.
5. Follow the procedures for Installation - Horizontal Exhaust Through Wall Installation - Freestanding. Place the unit in the desired location. Cut the hole in the wall at the desired location. Install a wall thimble.
6. Drill holes in the wall thimble in the corresponding locations for wire and fresh air if needed. Install wire clamps and feed wire through the hole in the thimble into the house. Tighten clamp on wire and attach green ground wire (at the symbol) with the screw and star washer provided.
7. Attach a short or an adjustable section of 3" of double wall pellet vent through the wall thimble to the stove. Seal all joints with silicone. Maintain clearances to combustibles.
8. Apply silicone to the pipe in the Exhaust Box, slide the pipe into the exhaust vent. Mount the Exhaust Box to the house. Reinstall the back grill on the Exterior Vent Housing Box. Apply normal venting practices when installing the vertical vent pipe.
9. Connect the wires in the stove. Re-install the Left side and Back Grill on the stove.
10. Set the Slider Damper as described in the Installation - Slider/Damper Setting" section.

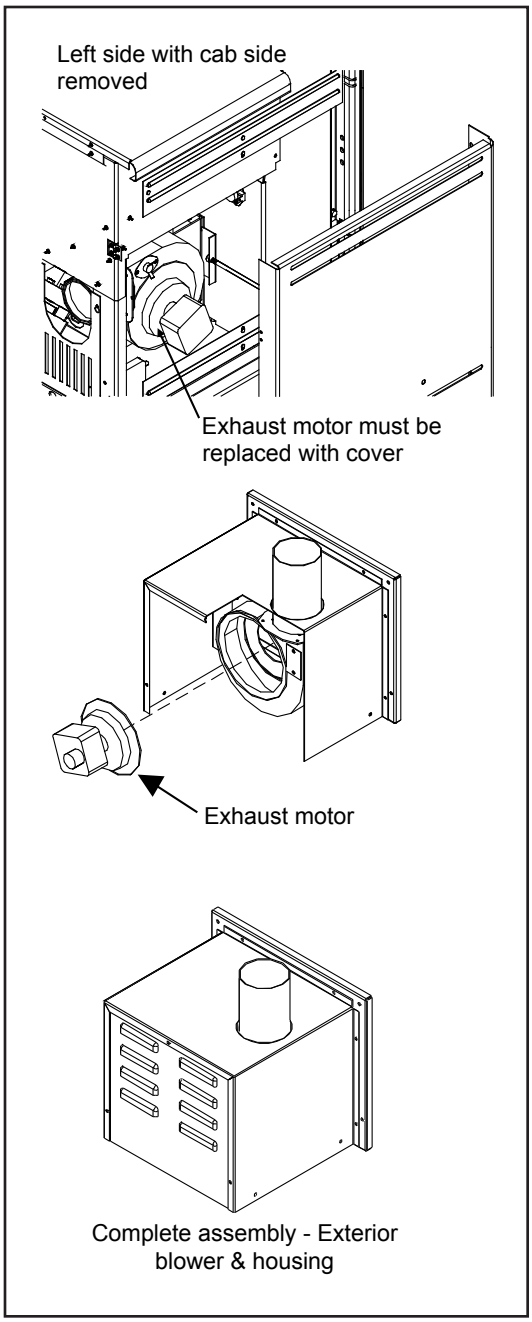

Figure 36: Exterior Exhaust Blower.

NOTE:

Ensure that all vent connections are installed by placing three (3) screws evenly spaced and a small bead of high temperature silicone at each chimney connection. Also ensure that all vertical vent sections are properly supported and that all clearances to combustibles are maintained in accordance with the vent manufacturer's specifications.

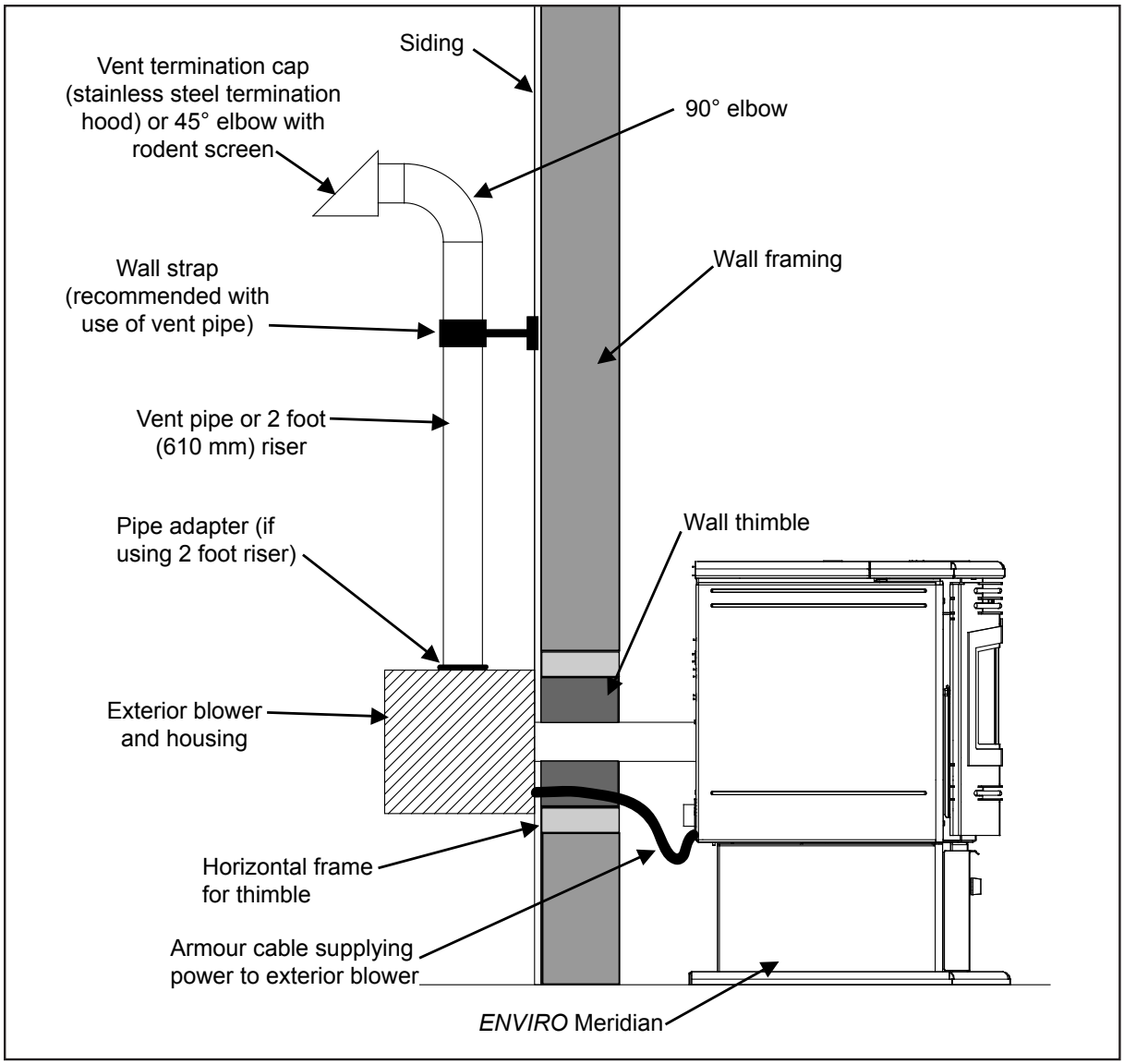

Figure 37: Exhaust Blower Installation; Horizontal Termination.

TO SUPPLY POWER TO THE EXHAUST BLOWER:

Install an amour coated electrical cable from the exhaust blower housing, through the wall thimble, and attach to the pre-drilled hole in the left hand rear hopper pillar. Hook up to wires from the wiring harness for the exhaust blower. All electrical connections must be in accordance with local code requirements (see Wiring Diagram).

Through Wall Vertical Installation With Exhaust Blower - Freestanding:

Refer to Installation - Installation with Exterior Mounted Exhaust Blower - Freestanding and Installation - Outside Vertical Installations - Freestanding. Ensure that vent pipe is properly secured to wall using wall straps. Maintain clearances to combustibles on vent pipe as well as unit.

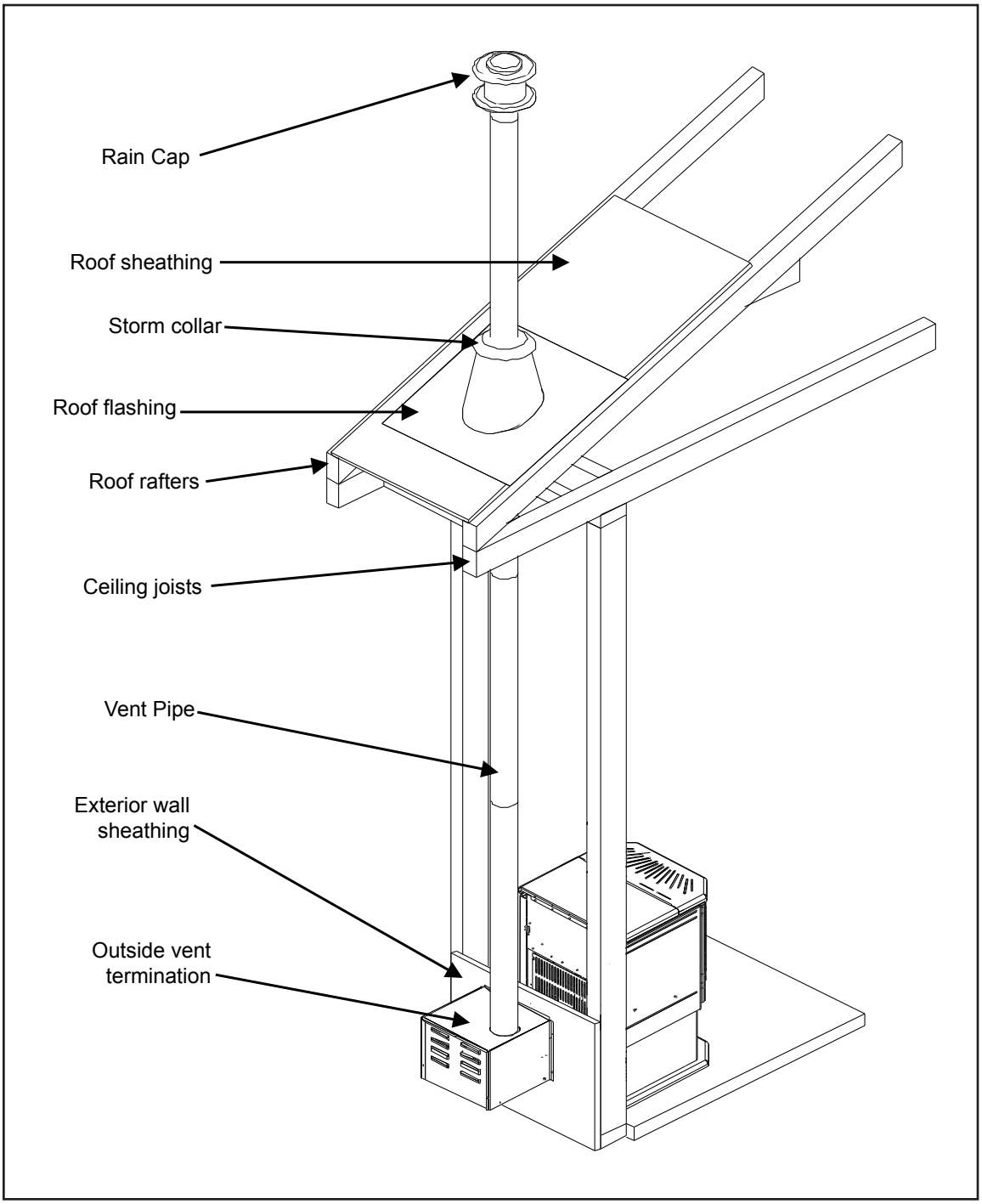

Figure 38: Exhaust Blower Installation; Vertical Termination.

Masonry Fireplace Insert Installation - Fireplace Insert:

The Fireplace insert model requires a surround faceplate and a pedestal. When installing this unit, ensure that the pedestal is removed from the inside of the hopper and installed on the bottom of the unit (Refer to Installation - Installation of Pedestal and Leveling Legs - Fireplace Insert).

Adjust hopper height (see Installation - Installing Hopper Cover and Adjusting Hopper Height - Fireplace Insert) and assemble surround panel (see Installation - Installation and Removal of Control Panel in The Surround Panel - Fireplace Insert and Installation - Assembly and Installation of Insert Surround Panels - Fireplace Insert) before starting installation.

A noncombustible hearth pad must cover combustible flooring underneath, as well as 6" (150 mm) in front of the heater and 6" (150 mm) to the side of the heater

1. Install the hearth pad.
2. Lock the fireplace damper in the open position.
3. Install a positive flue connector at the fireplace damper.
4. Connect a tee or 90° degree elbow to the exhaust pipe.
5. This fireplace insert must be installed with a continuous chimney liner of 3 or 4" diameter extending from the fireplace insert to the top of the chimney. The liner must conform to type 3 requirements of CAN/ULC S635.
6. (Recommended) Install fresh air intake either through the back of the fireplace or through the positive flue connector.

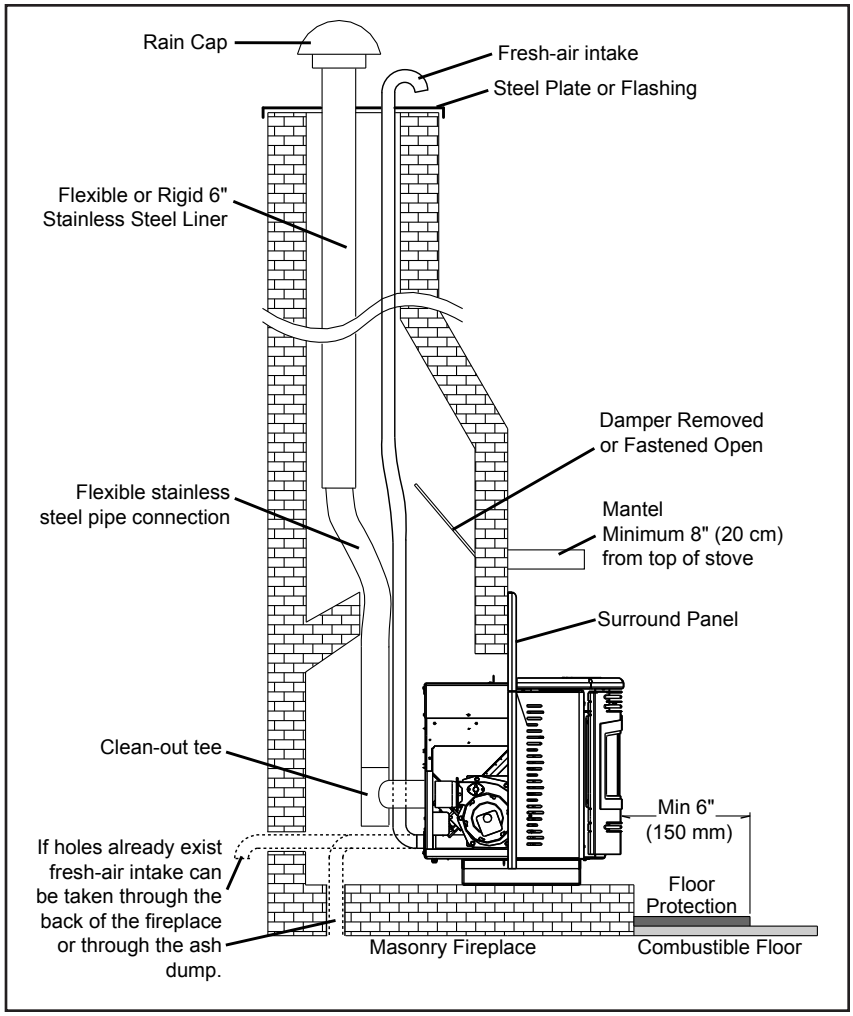

Figure 39: Installation of Fireplace Insert.

When installing the insert into a masonry fireplace DO NOT remove any bricks or masonry, with the following exception; masonry or steel, including the damper plate, may be removed from the smoke shelf and adjacent damper frame if necessary to accommodate a chimney liner. Provided that their removal will not weaken the structure of the fireplace and chimney, and will not reduce protection for combustible materials to less than that required by the national building code.

When installing the fireplace insert into a zero clearance fireplace, **DO NOT** cut or modify any factory firebox parts. If the fireplace insert does not fit into a zero clearance fireplace we recommend you use an ENVIRO freestanding model and install as a hearth mounted unit. Install a 3" (76 mm) flex pipe from the stove to the top of the chimney (see "Installation - Hearth Mount Installation - Freestanding").

Positive Flue Connection without a Full Reline - Fireplace Insert (USA Only):

This unit does not require a full reline (in USA only) when installing into a masonry fireplace, however, it is recommended to ensure proper drafting of the appliance.

IMPORTANT: Ensure the chimney and firebox are cleaned and free of all debris, including soot and ashes, before proceeding with this installation. If it is not clean soot maybe blown into the room through the unit's blower. Ensure the fireplace and chimney have not deteriorated in any way. If there is any sign of corrosion or damage in the chimney the unit can not be installed. This unit can be installing in a masonry fireplace built to (UBC 37 or ULC S628 standards) or a factory built fireplace (built to UL 127 or ULC S610 standards).

1. If installing the Empress with a skirt, the skirt must be installed before the installation.
2. Install the hearth pad. The floor 6" (150 mm) in front of the unit and 6" (150 mm) to each side of the unit must be protected with a non-combustible hearth pad.
3. The vent connector from the insert must extend a minimum of 18" above the chimney seal plate. The chimney seal plate area must be sealed to prevent the exhaust from the chimney from coming back into the fireplace and prevent air from the fireplace from entering the chimney which will affect proper drafting of appliance.

   A qualified installer should evaluate the existing fireplace to determine the best method for achieving a positive flue connection between the vent pipe or liner and the chimney. Whatever method used must effectively seal the area to prevent room air passage to the chimney cavity of the fireplace. A couple examples of Approved Methods of Achieving a Positive Flue Connection are:

   a) Secure a seal-off plate (i.e. 22-gage sheet steel) in the masonry fireplace throat using masonry screws.

   b) Pack non-combustible material (i.e. rockwool) around the vent pipe or using a flue adapter.
4. Set leveling leg to approximate height.
5. Connect the Exhaust Starter Quick Connect, straight or elbow, to the exhaust pipe.

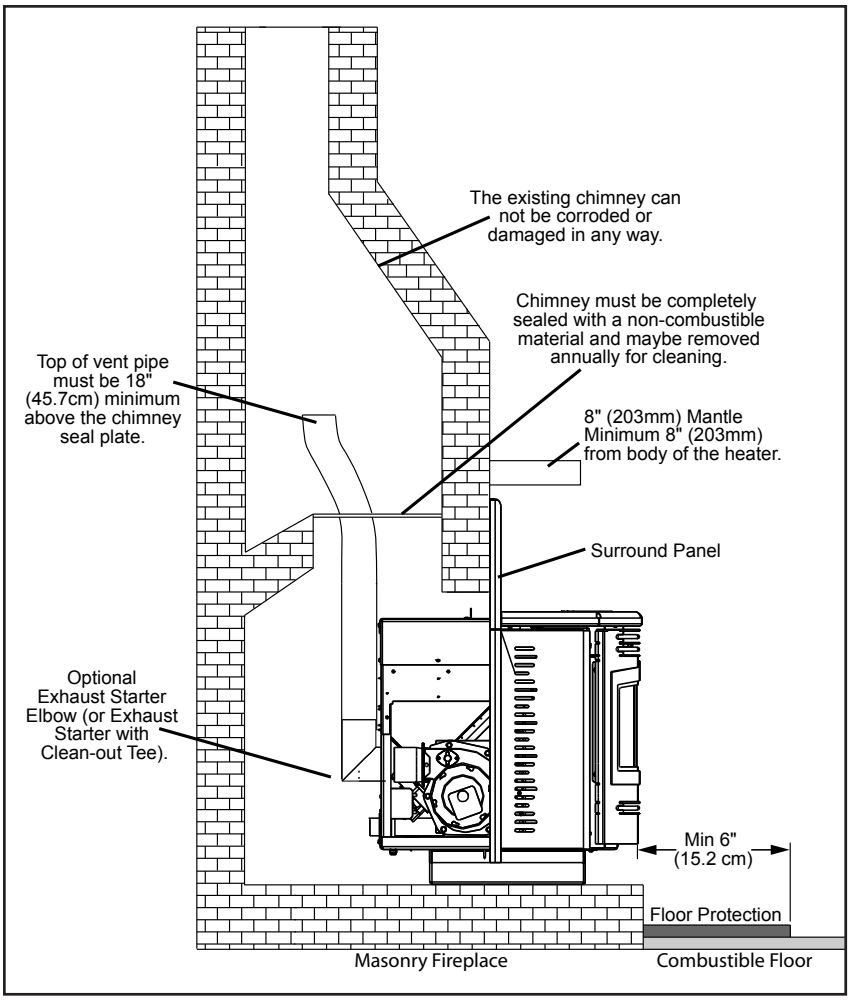

Figure 40: Masonry fireplace positive flue installation.

IMPORTANT: The chimney seal plate must be removed for the annually chimney cleaning as ash will build up on top of the plate.

Installation and Removal of Control Panel in The Surround Panel - Fireplace Insert:

When installing the circuit board control panel into the surround panel, the surround does not need to be assembled. The circuit board will be found in the firebox.

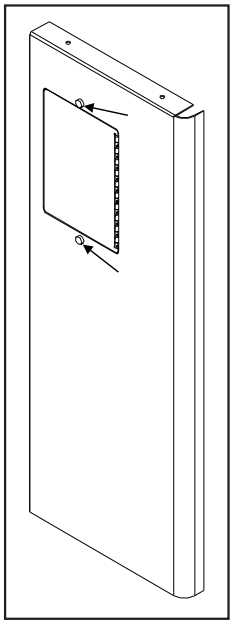

Figure 41: Right Panel - Front.

Place the circuit board control panel on the backside of the right surround panel so the hinge is on the outside and the top and bottom holes on the control panel line up with those on the surround. Attach using two (2) T-20 screws through the front of the surround into the circuit board control panel (see Figure 41).

After the surround has been assembled and is ready to be installed on the unit plug the wiring harness into the control panel (see Figure 42).

REMOVAL:

When maintenance is required on the unit the surround must be removed. Pull the surround straight up till it stops then pull it out about 4" (10 cm) and rest the surround on top of the unit while the control panel is removed or disconnected.

If electrical connection is required for the maintenance remove the circuit board control panel from the surround.

If electrical connection is not required for the maintenance remove the wiring harness from the bottom of the circuit board control.

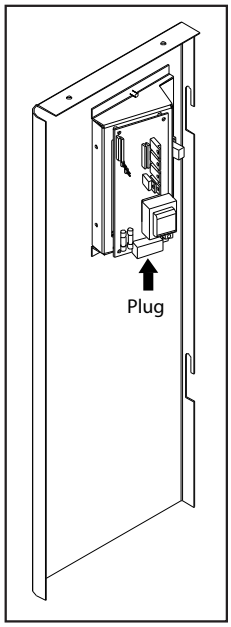

Figure 42: Right Panel - Back.

Assembly and Installation of Insert Surround Panels - Fireplace Insert:

The trim set for your surround panel must be installed before installing the surround panel onto the unit, if not already done.

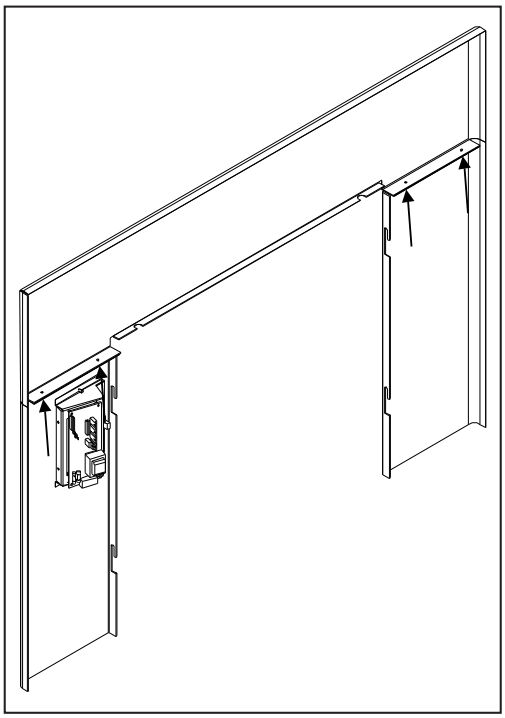

Figure 33: Assembled Surround Panel.

1. To assemble the surround panels, lay the panels face down on a soft flat surface and align the outer edges of the sides with the top panel. Using four (4) T-20 screws up through the side panels into the top (see Figure 43).

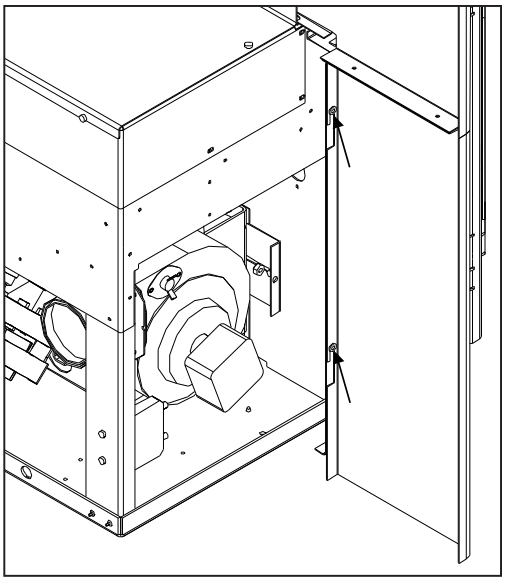

Figure 34: Installed Surround Panel.

2. Place the assembled surround panel around the stove; align the slots with the screw heads. Push surround in then down to engage the surround slots on the mounting screws (see Figure 44). Make sure the top surround panel sits flat behind the stove top.

Plated Trim Installation:

TO AVOID PERSONAL INJURY DO NOT REMOVE OR REPLACE TRIMS WHEN PELLET STOVE IS HOT!

KIT COMPONENTS:

Quantity	Description
2	Upper Cabinet Trim
2	Lower Cabinet Trim
1	Top Trim
3	Louver
4	#8 nut plated (spares)

TOOLS REQUIRED:

- T-20 screwdriver
- $^{11}/_{32}$" socket

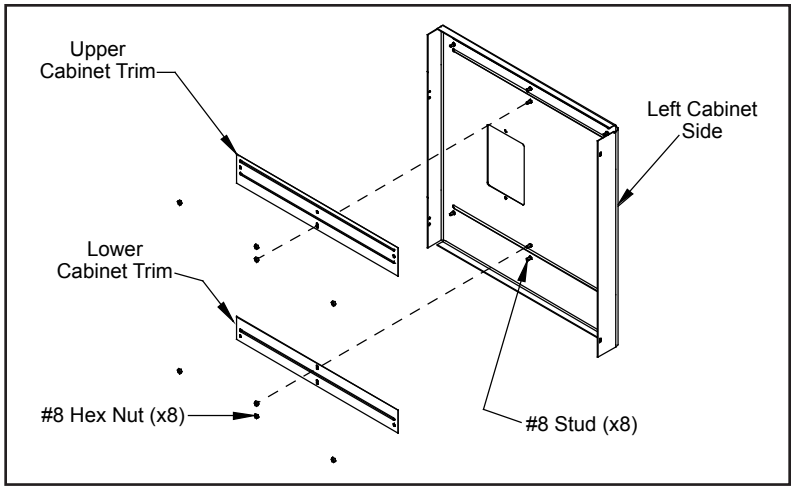

Figure 45: Right cab side with upper and lower cabinet trims.

REMOVAL OF SIDE TRIMS:

When stove is off and cool, open the door. Remove the two (2) screws on the right cab side (at top and bottom of front flange) and the two (2) screws on the left cab side (one above and one below hinge). The cab sides have hinges at the back so they can swing open when the screws have been removed.

Remove the trims that will be replaced by unfastening the #8 hex nuts (four (4) for each piece of trim) by hand. Carefully remove the trim from the studs.

REPLACEMENT OF SIDE TRIMS:

Place the new trim pieces on their corresponding studs and finger tighten the #8 hex nuts (four (4) for each piece of trim). Refer to Figure 45.

Close both cab sides and replace the two (2) screws on each side.

REMOVAL OF TOP TRIM:

With door open, undo the two (2) screws on the underside of the top there are visible under the angled corners. Open the hopper lid, remove the two (2) screws that are found attached to the top under the hopper lid. Pull top forward, lift the top front piece off the stove and turn it over. Remove the six (6) #8 hex nuts and pull the trim off the studs.

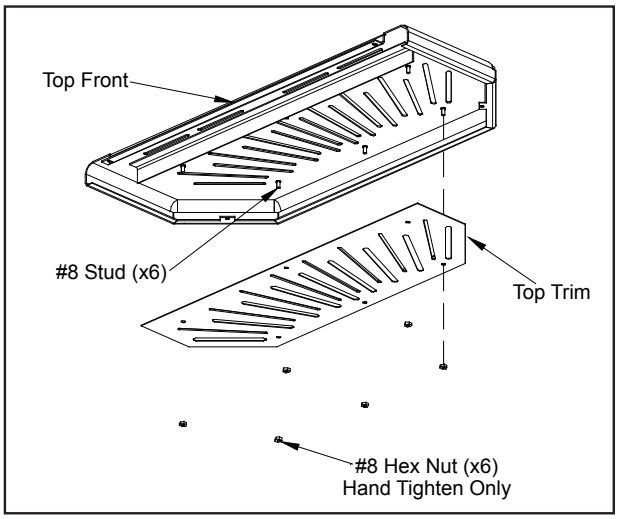

Figure 46: Top front with top tri

REPLACEMENT OF THE TOP TRIM:

Place the new trim on its corresponding studs (see Figure 46) and finger tighten the six (6) #8 hex nuts.

Replace top front on top of the stove, remembering to hook the two (2) front tabs under the corresponding tabs on the stove. Replace the two (2) screws on the top under the hopper lid then close lid. Replace the two (2) screws under the corner lips above the door. Align top then tighten screws.

REMOVAL OF LOUVER BAR SET:

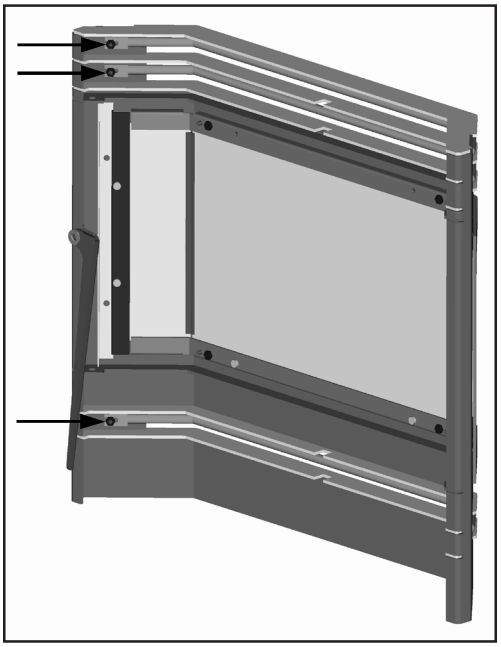

Figure 47: Door with louvers.

Door must be open. The three (3) arrows in Figure 47 point to three (3) of the nuts that hold the louvers on. There are three nuts on each end. Remove the six nuts by hand; if the nuts are tight, a $^{11}/_{32}$" socket can be used. When removing the louvers, pull one end of the louver up over the stud. If it is difficult to remove the louver, push on one side from the front, then pull the other end off the second stud.

REPLACEMENT OF LOUVER BAR SET:

Place one slotted end of new louver over a stud, then slide the other slot over the corresponding stud; replace the nuts and hand tighten. Close door when all three louvers are replaced.

Clean all plated surfaces before starting the stove. See Cleaning Plated Surfaces in Routine Cleaning and Maintenance in the Owner's Manual.

Plated Door Installation:

TO AVOID PERSONAL INJURY DO NOT REMOVE OR REPLACE COVER WHEN PELLET STOVE IS HOT!

TOOLS REQUIRED:

- $^{11}/_{32}$" socket or wrench

REMOVAL OF DOOR COVER:

When stove is off and cool, open the door. Remove the four (4) #8 hex nuts around the inside of the glass retainer shown in Figure 48.

Remove door cover from door by gently sliding the studs out of the holes. If it is difficult to remove the cover, the glass retainer may be pinching the threads on the studs. Slightly loosen the four (4) screws (by each of the studs).

REPLACEMENT OF DOOR COVER:

Slide new door cover into place and hand tighten the four (4) #8 hex nuts around the inside of the glass retainer. Ensure the four screws are also hand tight and close door.

Clean all plated surfaces before starting the stove. See Cleaning Plated Surfaces in Routine Cleaning and Maintenance in the Owner's Manual.

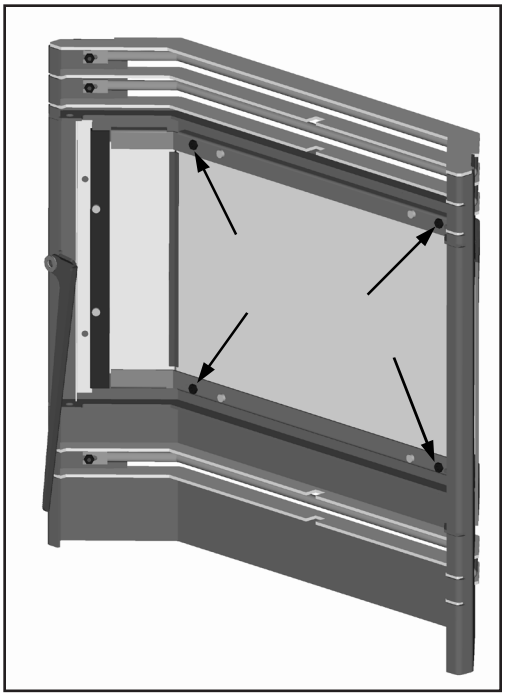

Figure 48: Inner side of Meridian door.

Thermostat Installation:

1. Install the wall thermostat in a location that is not to close too the unit but will effectively heat the desired area.

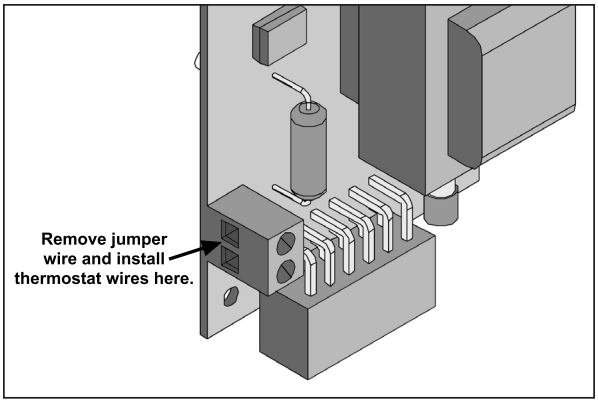

Figure 49: Thermostat wire placement.

2. Install a 12 or 24 Volt Thermostat using an 18 x 2 gauge wire from the unit to the thermostat.

If the unit has been placed in the HI / LOW mode, the unit will be taken to a low or idle setting when the thermostat is not calling for heat. When the thermostat calls for heat, the unit will go to the setting that is displayed on the control board Heat Indicator. If the heating load is not great enough when the stove is on low, the high limit switch will turn the stove off and the switch will have to be manually reset. To reset the high limit switch, remove the right cabinet side. The switch is found behind the control panel. Avoid setting off the high limit switch.

Troubleshooting

DO NOT:

- Service the stove with wet hands. The stove is an electrical appliance, which may pose a shock hazard if handled improperly. Only qualified technicians should deal with possible internal electrical failures.
- Do not remove from the firebox any screws without penetrating oil lubrication.

WHAT TO DO IF:

1. The stove will not start.
2. The stove will not operate when hot.
3. The exhaust blower will not function normally.
4. Light # 2 on Heat output bar flashing.
5. Auger light flashes but auger motor does not turn at all
6. The 200 °F (93 °C) high limit temperature sensor has tripped.
7. The convection blower will not function normally.
8. Ignitor- the pellets will not light.
9. Control settings (Heat Level) has no effect on the fire.
10. The stove keeps going out.

***NOTE: All troubleshooting procedures should be carried out by qualified technicians or installers.**

1. The stove will not start.

✓Make sure the stove is plugged in and the wall outlet is supplying power..

✓If the Control Board has been placed in the ON /OFF thermostat mode, then turn the thermostat up to call for heat.

✓Ensure the burn pot liner is correctly placed in the burn pot

✓Check the Heat Level Indicator. - If the # 2 light is flashing (see the # 2 light is flashing)

✓Check the fuse on the circuit board.

✓If the unit still does not start, contact your local service dealer for service.

2. The stove will not operate when hot.

✓Check the Heat Level Indicator if a fire is not detected, or if the fire has gone out **the #3 light will flash** because the Exhaust Temperature Sensor's contacts have opened.

✓Check the hopper for fuel.

✓Incorrect air damper setting. - Excessive air may consume the fire too quickly before the next drop of fuel, leaving completely unburned fuel in the burn pot liner. - Insufficient air will cause build up, further restricting the air flow through the Burn Pot Liner. This in turn will cause the fuel to burn cold and very slowly. Fuel may build up and smother the fire. In this case clean the burn pot. **(NOTE: unit may require a change to the vent system or installation of fresh air to correct Air to Fuel ratio problems).**

✓Combustion Blower failure. - The Combustion Blower is not turning fast enough to generate the proper vacuum in the fire box. Visual Check – is the blower motor turning.

✓Check the Exhaust Blower voltage across the blower wires (>=114 V on #5 setting and >= 82 on #1 setting). – Replace the Circuit Board if the Voltage reading is less than 82 V. with a line voltage >115 V AC.

✓Check Vacuum levels in the exhaust channel by bypassing the Vacuum Switch, then remove the Vacuum hose from Vacuum Switch. Check exhaust vacuum readings by placing the open end of the Vacuum Hose on a Magnahelic Gauge (readings must be above .10" W.C. on low fire).

If the motor fails to reach a 0.10" W.C. readings, then replace the Combustion Blower.

✓Poor Quality Fuel – Insufficient energy in the fuel to produce enough heat to keep the stove burning or operational.

✓Exhaust Temperature Sensor failure. – Bypass sensor located on Exhaust Blower if stove now operates properly, the unit may require cleaning or a new sensor. Contact your local dealer for service.

✓Check the fuse on the circuit board.

3. The exhaust motor will not function normally.

✓Open the left side access panel; check all connections against the wiring diagram.

✓See "2. The stove will not operate when hot." section.

4. Light # 2 on Heat output bar flashing

(The Vacuum Switch contacts have opened for more than 15 sec.)

✓Pinch, break or blockage in Vacuum Hose - Check hose for pinch points or damage, replace or re-route as required. Blow out Vacuum Hose

✓Blocked Hose Barb on Exhaust Channel - Use a paper clip to clean out Hose Barb or remove the Vacuum Hose from the Vacuum Switch and blow into the hose to remove blockage.

✓Blocked exhaust / venting system - Have stove and venting cleaned and inspected.

✓Severe negative pressure in area where unit is installed - Check the operation by opening a window, does this solve the problem? If it does, install fresh air intake to unit or room. Venting system may require vertical section to move termination into a low pressure zone.

✓Vacuum Switch failure - Bypass the vacuum switch, if this corrects the problem check for above problems before replacing the Vacuum Switch.

✓Damage to gray wires between Circuit Board and Vacuum Switch - Inspect wires and connectors

✓Combustion Blower failure - The Combustion Blower is not turning fast enough to generate the proper vacuum in the Exhaust Channel. Visual Check; is the blower motor turning? Check the Exhaust Blower voltage across the blower wires (>=114 V on #5 setting and >= 82 V on #1 setting). – Replace the Circuit Board if the Voltage reading is less than 82 V. with a line voltage >114 V AC.

✓Check Vacuum levels in the exhaust channel by bypassing the vacuum switch, then remove the Vacuum hose from Vacuum Switch. Check exhaust vacuum readings by placing the open end of the Vacuum Hose on a Magnahelic Gauge. (readings must be above .10" W.C. on low fire).

If the motor fails to reach a 0.10" W.C. readings, then replace the Combustion Blower

To reset Circuit Board after a trouble code - push the ON/OFF button

5. Auger light flashes but auger motor does not turn at all.

✓If the Auger gear box does not turn but the motor's armature does try to spin then the auger is jammed. – Try to break apart jam by poking at the jam through the drop tube. If this fails then empty the hopper and remove the Auger Cover **Remember to re-seal the cover after installation**

✓Check the fuse on the circuit board.

6. The 200 °F (93 °C) high limit temperature sensor has tripped.

✓Reset sensor and determine cause – was it Convection Blower failure or 160 °F (71 °C) Temperature Sensor failure? Bypass the 160 °F (71 °C) sensor, does the Convection blower come on high if not replace the blower? If yes, replace sensor (located on the left side of the firewall).

✓Check the fuse on the circuit board.

7. The convection blower will not function normally.

✓Clean all grill openings at the back and below unit .

✓Press the fan button; does the fan come on? Press again to verify that the blower turns on; if, not contact your local dealer for service.

8. Ignitor- the pellets will not light.

✓Everything else in the stove operates but the ignitor will not light the pellets.

✓Make sure the burn pot liner is up tight and square to the ignitor tube by pushing the burn pot back against the ignitor tube.

✓Check to see if the exhaust blower is operating. If not, contact your local dealer for service.

✓Check the fuse on the circuit board.

NOTE: The ignitor should be bright orange in color. If not replace the ignitor.

9. Control settings (Heat Level) has no effect on the fire.

✓NOTE: If the system light is flashing the Control Board has complete control of the unit. When the units system light becomes solid then control of the unit is given back to the operator.

✓If there is no control of the Heat Level button make sure the thermostat is calling for heat.

✓Call your local dealer for service.

10. The stove keeps going out.

If the stove goes out and leaves fresh unburned pellets or cigarette-like ashes in the burn pot liner, the fire is going out before the stove shuts off.

✓Check to see that the Slider / Damper is in the correct position.

✓Turn the Heat Level up slightly (poor quality pellets will require slightly higher settings).

✓Increase the feed rate trim.

If the stove goes out and there are partially burned pellets left in the burn pot liner, the stove has shut down due to a lack of air, exhaust temperature, or power failure.

✓Adjust the Slider / Damper.

✓Check to see if the stove needs a more complete cleaning.

✓Turn the Heat Level up slightly (poor quality pellets will require slightly higher settings).

✓Did the power go out?

✓Contact your local Dealer for service.

Wiring Diagram

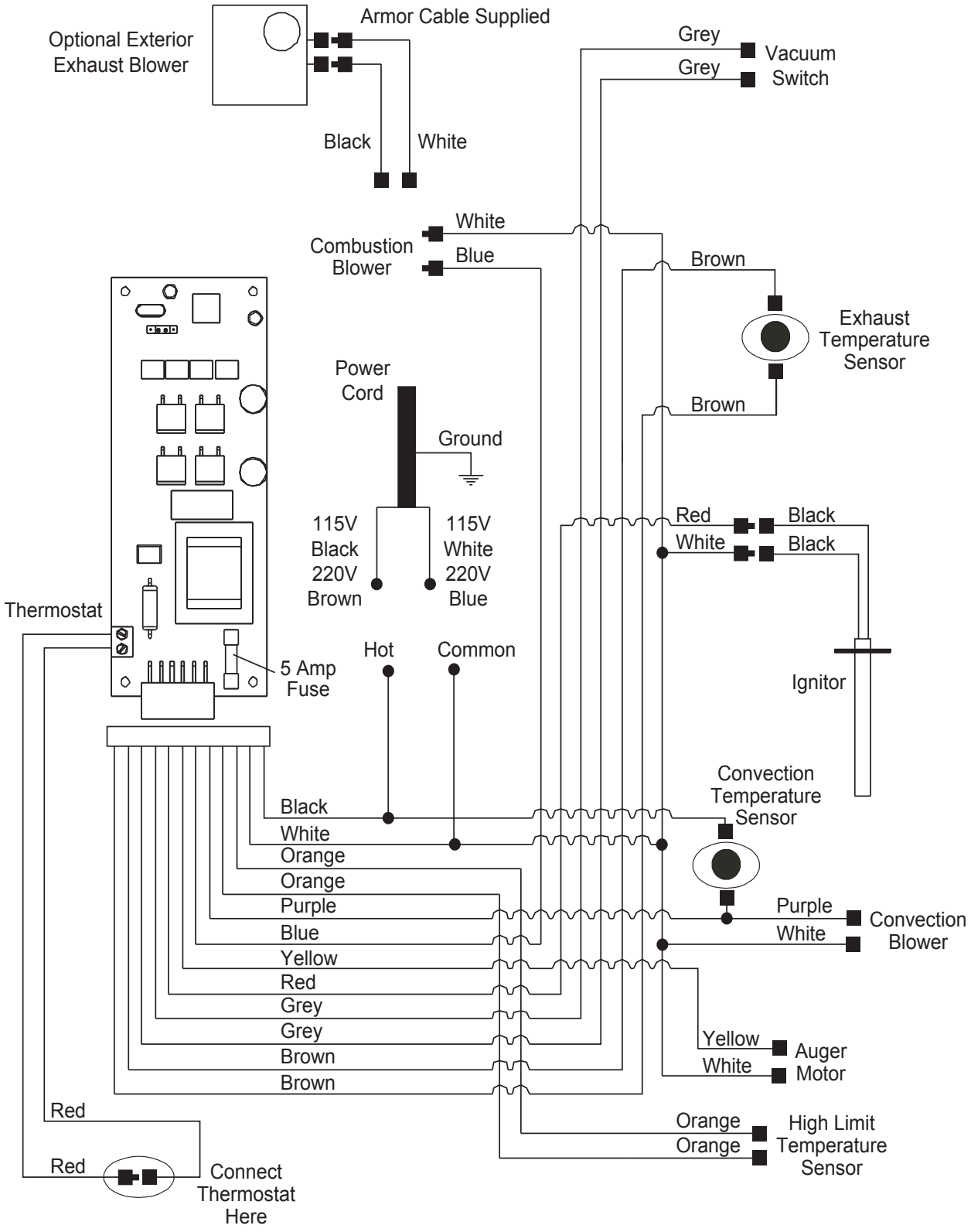

Parts List - Components

Reference Number	Description	Part Number
1	120 °F (49 °C) Ceramic Fan Temperature Sensor	EC-001
	Domestic Power Cord - 115V	EC-042
2	Auger Motor - 115V	EF-001
3	Convection Blower 115V	EF-002
4	Fan Temp Sensor 160 °F (71 °C)	EF-013
5	High Limit Temp Sensor 200 °F (93 °C) Manual Reset	EF-016
6	Vacuum Switch - 115V	EF-017
	Silicone Hose	EF-018
	Aluminum Hose Barb	EF-019
7	Auger	EF-025
8	Door Handle Complete	EF-028
9	Slider Damper Rod with Knob	EF-050
10	Glass Set with Tape	EF-062
11	Slider Damper Plate	EF-064
12	Brass Auger Bushing	EF-065
13	Ash Pan Latch (Freestanding)	EF-178
	Pedestal & Ash Pan Gasket - 10’ (305 cm)	EF-208
	External Exhaust Back	EF5-143
	External Exhaust Box	EF5-144
	External Exhaust Bottom	EF5-145
	45° Exhaust Adaptor	EF5-146
	Exhaust Starter Tube 3” x 2½” Long	EF5-147
	Log Set	20-036
14	Control Panel Door	20-040
	External Exhaust Kit (3” pipe)	20-070
	60° Exterior Exhaust Adaptor	50-096
16	Control Panel Touch Latch	50-323
	Circuit Board Stand Offs	50-331

Parts List - Components

Reference Number	Description	Part Number
17	Combustion/ Exhaust Blower - 115V	50-901
18	Stainless Steel Burn Pot Liner - Standard	50-474
18	Stainless Steel Burn Pot Liner - High Ash	50-587
19	Flush Handle for Hopper Lid (Freestanding)	50-523
20	Door	50-2527
21	Burn Pot	50-658
22	Ash Pan (Freestanding)	50-659
23	Pedestal (Freestanding)	50-660
24	Cabinet Side Left (Freestanding)	50-661
25	Cabinet Side Right (Freestanding)	50-670
26	Back Grill (Freestanding)	50-675
27	Hopper Lid (Freestanding)	50-676
28	Top Front (Freestanding)	50-677
29	Tube Cleaner Rod	50-680
30	Fluted Liner Set	50-3038
31	Liner Retainer Set	50-682
	Owner's Manual - 115V	50-765
	Technical Manual - 115V	50-1485
32	Cabinet Side - Left (Insert)	50-823
33	Cabinet Side - Right (Insert)	50-824
34	Top Front (Insert)	50-825
35	Ash Pan (Insert)	50-826
36	Hopper Lid (Insert)	50-827
37	Hopper Cover (Insert)	50-828
38	300 Watt Ignitor 115V	50-1067
39	Circuit Board	50-1929
	Circuit Board Decal	50-1930
40a	Control Panel (No decal) - Insert	50-2404
40b	Control Panel (No decal) - Free Standing	50-2405

Parts List - Options

Reference Number	Description	Part Number
	Body Trim Kit - Pewter (Freestanding)	50-620
	Body Trim Kit - Gold (Freestanding)	50-621
	Body Trim Kit - Antique Copper (Freestanding)	50-622
41	Door Cover - Painted	50-683
41	Door Cover - Pewter	50-623
41	Door Cover - Gold	50-624
41	Door Cover - Antique Copper	50-625
42	Louver Bar Set - Painted	50-654
42	Louver Bar Set - Gold	50-655
42	Louver Bar Set - Pewter	50-656
42	Louver Bar Set - Antique Copper	50-657
43	Lower Cabinet Trim (1 piece) - Painted (Freestanding)	50-662
43	Lower Cabinet Trim (1 piece) - Gold (Freestanding)	50-663
43	Lower Cabinet Trim (1 piece) - Pewter (Freestanding)	50-664
43	Lower Cabinet Trim (1 piece) - Antique Copper (Freestanding)	50-665
44	Upper Cabinet Trim (1 piece) - Painted (Freestanding)	50-666
44	Upper Cabinet Trim (1 piece) - Gold (Freestanding)	50-667
44	Upper Cabinet Trim (1 piece) - Pewter (Freestanding)	50-668
44	Upper Cabinet Trim (1 piece) - Antique Copper (Freestanding)	50-669
45	Top Trim - Painted	50-671
45	Top Trim - Gold	50-672
45	Top Trim - Pewter	50-673
45	Top Trim - Antique Copper	50-674
46	Regular Panel Set (Insert)	50-769
47	Oversized Panel Set (Insert)	50-770
	Trim Kit - Pewter (Insert)	50-771
	Trim Kit - Antique Copper (Insert)	50-772
	Trim Kit - Gold (Insert)	50-773
48	Regular Panel - Left (Insert)	50-817
49	Regular Panel - Right (Insert)	50-818
50	Regular Panel - Top (Insert)	50-819
51	Oversized Panel - Left (Insert)	50-820
52	Oversized Panel - Right (Insert)	50-821
53	Oversized Panel - Top (Insert)	50-822

Parts Diagram - Components

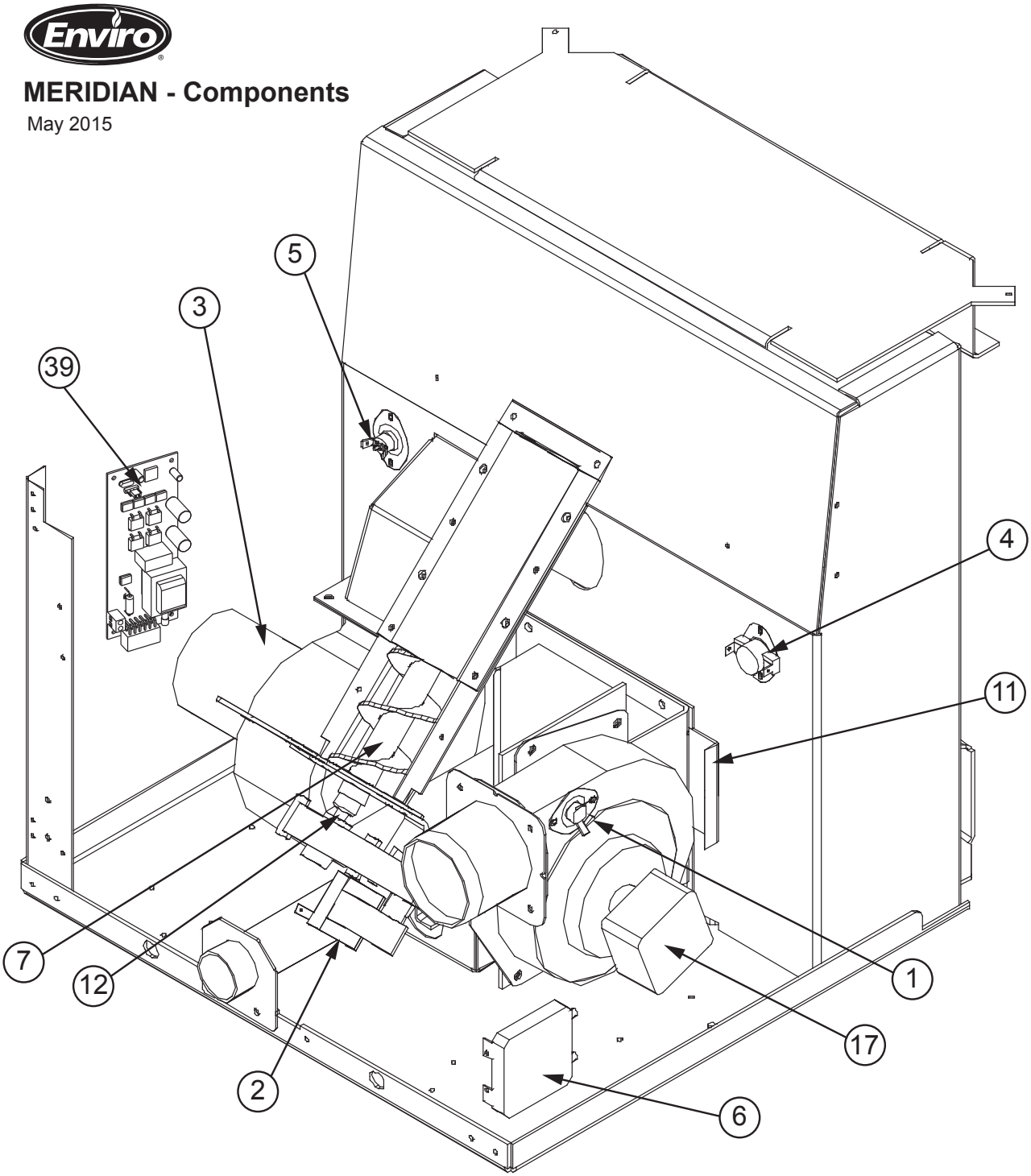

Parts Diagram - Freestanding Steel

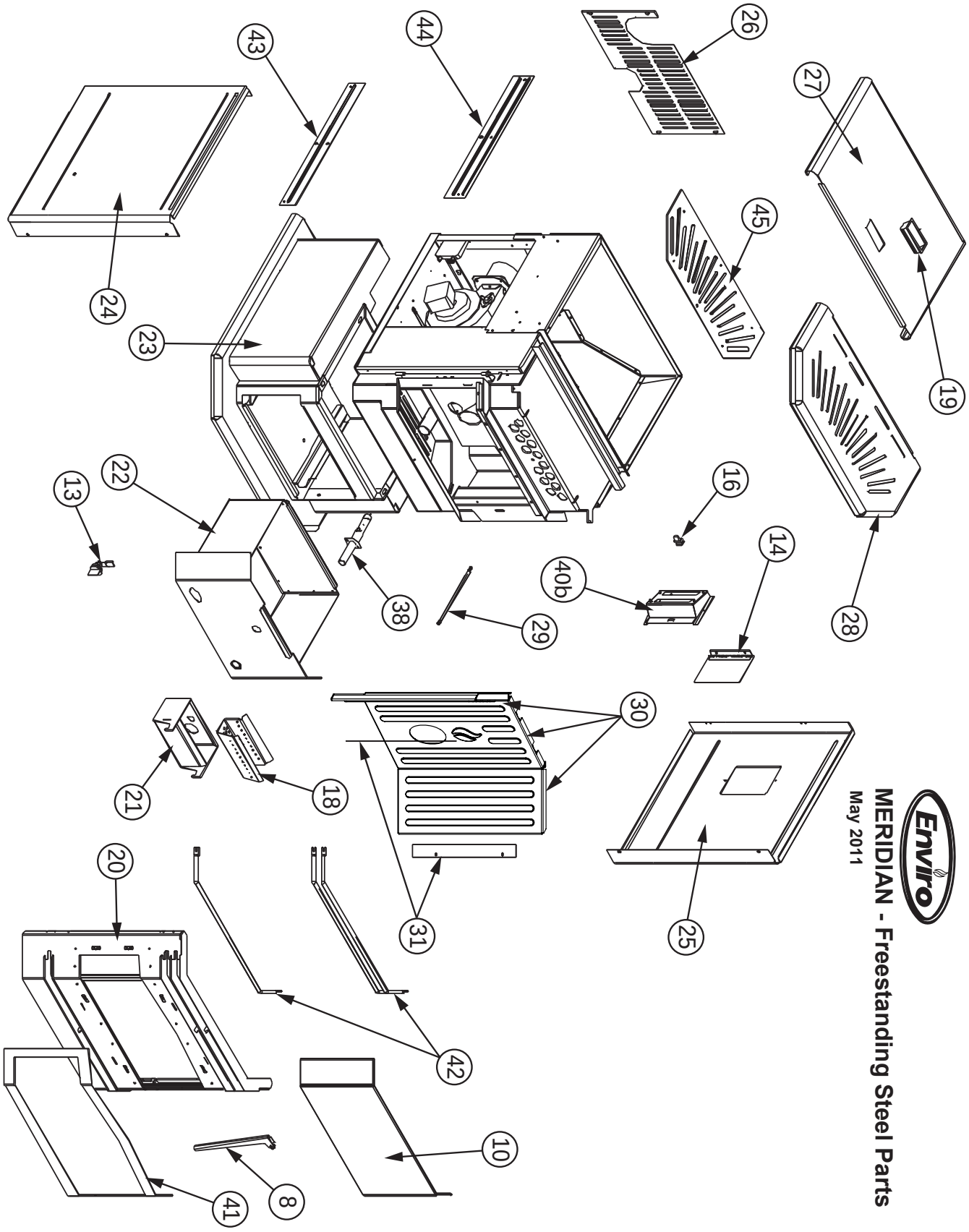

Parts Diagram - Insert Steel

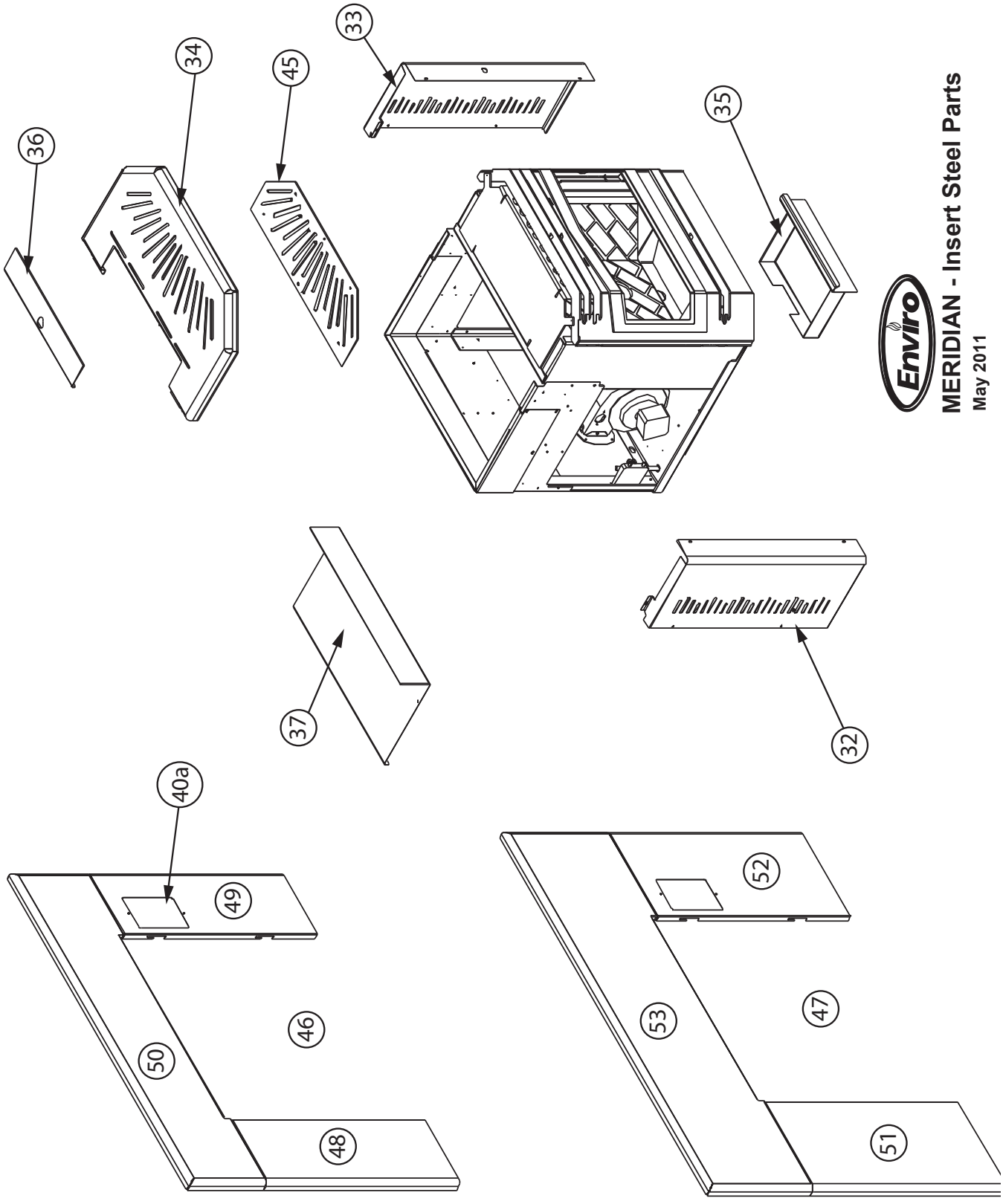

MERIDIAN - Insert Steel Parts
May 2011

Notes

Warranty for Enviro **Pellet** Products

Sherwood Industries Ltd. ("Sherwood") hereby warrants, subject to the terms and conditions herein set forth, this product against defects in material and workmanship during the specified warranty period starting from the date of original purchase at retail. In the event of a defect of material or workmanship during the specified warranty period, Sherwood reserves the right to make repairs or to assess the replacement of a defective product at Sherwood's factory. The shipping costs are to be paid by the consumer. All warranties by Sherwood are set forth herein and no claim shall be made against Sherwood on any oral warranty or representation.

Conditions

- A completed warranty registration must be submitted to Sherwood within 90 days of original purchase via the online warranty registration page or via the mail-in warranty registration card provided. Have the installer fill in the installation data sheet in the back of the manual for warranty and future reference.
- This warranty applies only to the original owner in the original location from date of install.
- The unit must have been properly installed by a qualified technician or installer, and must meet all local and national building code requirements.
- The warranty does not cover removal and re-installation costs.
- Sherwood Industries Ltd. reserves the right to make changes without notice.
- Sherwood Industries Ltd. and its employees or representatives will not assume any damages, either directly or indirectly caused by improper usage, operation, installation, servicing or maintenance of this appliance.
- A proof of original purchase must be provided by you or the dealer including serial number.
- This warranty is void if the unit is used to burn materials for which the unit is not certified by the EPA and void if not operated according to the Owner's Manual.

Exclusions

An expanded list of exclusions is available at www.enviro.com/help/warranty.html

This warranty does not cover:

- Damage as a result of improper usage or abuse.
- Damage caused from over-firing due to incorrect setup or tampering.
- Damage caused by incorrect installation.

To the Dealer

- Provide name, address and telephone number of purchaser and date of purchase.
- Provide date of purchase. Name of installer and dealer. Serial number of the appliance. Nature of complaint, defects or malfunction, description and part # of any parts replaced.
- Pictures or return of damaged or defective product may be required.

To the Distributor

- Sign and verify that work and information are correct.

Sherwood Industries Ltd.
6782 Oldfield Road, Victoria, BC . Canada V8M 2A3
Online warranty registration: www.enviro.com/warranty/

Category	One Year	Two Year	Limited Lifetime (7yr)
Parts [1] (unit serial number required)		✔	
Firebox Brick Panels (Cast)		✔	
Firebox			✔
Heat Exchanger			✔
Burn Pot			✔
Burn Pot Liner		✔	
Firebox Liner Panels w/Insulation			✔
Ceramic Glass [2]	✔		
Pedestal / Legs (excluding finish)			✔
Surround Panels (excluding finish)			✔
Exterior Panels (excluding finish)			Up to 5 years
Electrical Components		✔	
Steel Brick Liner (Metal)	✔		
Exterior Surface Finishing [3]	✔		
Labour	✔		

[1] Whereas warranty has expired, replacement parts will be warrantied for 90 days from part purchase date. Labour not included. Unit serial number required.

[2] Glass is covered for thermal breakage. Photos of box, inside of door, and unit serial # must be supplied for breakage due to shipping.

[3] Exterior Surface finishing covers Plating, Enamel or Paint and excludes colour changes, chipping, and fingerprints.

Gaskets not covered by Warranty.

Travel costs not included.

Cast Agitator: 1 year for pellet. Not covered when burning alternative fuels. (Cast agitators are a consumable item)

Installation Data Sheet

The following information must be recorded by the installer for warranty purposes and future reference.

NAME OF OWNER:

_____

ADDRESS:

_____

_____

_____

PHONE:_____

NAME OF DEALER:

_____

ADDRESS:

_____

_____

_____

PHONE:_____

MODEL:_____

SERIAL NUMBER:_____

DATE OF PURCHASE: _____ (dd/mm/yyyy)

DATE OF INSTALLATION:_____(dd/mm/yyyy)

MAGNEHELIC AT INSTALL:_____

INSTALLER'S SIGNATURE:

_____

NAME OF INSTALLER:

_____

ADDRESS:

_____

_____

_____

PHONE:_____

MANUFACTURED BY:
SHERWOOD INDUSTRIES LTD.
6782 OLDFIELD RD. SAANICHTON, BC, CANADA V8M 2A3
www.enviro.com
August 28th, 2018
C-15261