WARRANTY REGISTRATION
enviro.com/warranty

Q1L

DIRECT VENT FIREPLACE - NOVA

OWNER'S MANUAL



C ETL LISTED US
Intertek
4001609

WARNING: If the information in this manual is not followed exactly, a fire or explosion may result causing property damage, personal injury or loss of life. Installation and service must be performed by a qualified installer, service agency or the gas supplier.

Fr Version Française: www.enviro.com/fr.html

50-2999

Safety Precautions

WARNING:

FIRE OR EXPLOSION HAZARD

Failure to follow safety warnings exactly could result in serious injury, death, or property damage.

- Do not store or use gasoline or other flammable vapors and liquids in the vicinity of this or any other appliance.

- WHAT TO DO IF YOU SMELL GAS

- **Do not try to light any appliance.**
- **Do not touch any electrical switch; do not use any phone in your building.**
- **Leave the building immeadiately.**
- **Immeadiately call your gas supplier from a neighbor's phone. Follow the gas supplier's instructions.**
- **If you cannot reach your gas supplier, call the fire department.**

- Installation and service must be performed by a qualified installer, service agency or the gas supplier.

INSTALLER:
Leave this manual with the appliance.

CONSUMER:
Retain this manual for future reference.

This appliance may be installed in an after-market permanently located, manufactured (mobile) home, where not prohibited by local codes.

This appliance is only for use with the type of gas indicated on the rating plate. This appliance is not convertible for use with other gases, unless a certified kit is used.

Massachusetts installations (Warning): This product must be installed by a licensed plumber or gas fitter when installed within the Commonwealth of Massachusetts. Other Massachusetts code requirements: Flexible connector must not be longer than 36in., a shut off valve must be installed; only direct vent sealed combustion products are approved for bedrooms/bathrooms. A carbon monoxide detector is required in all rooms containing gas fired direct vent appliances. The fireplace damper must be removed or welded in the open position prior to installation of a fireplace insert.

Safety Precautions

FOR SAFE INSTALLATION AND OPERATION OF YOUR "ENVIRO" HEATER, PLEASE CAREFULLY READ THE FOLLOWING INFORMATION:

• All ENVIRO gas-fired appliances must be installed in accordance with their instructions. Carefully read all the instructions in this manual first. Consult the building authority having jurisdiction to determine the need for a permit prior to commencing the installation.

• **NOTE:** Failure to follow these instructions could cause a malfunction of the fireplace, which could result in death, serious bodily injury, and/or property damage.

• Failure to follow these instructions may also void your fire insurance and/or warranty.

GENERAL

• Installation and repair should be done by a qualified service person. The appliance should be inspected before the first use and, at least, annually by a qualified service person. More frequent cleaning may be required due to excessive lint from carpeting, bedding material, etc. It is imperative the control compartments, burners and circulating air passageways of the appliance be kept clean.

• Due to high temperatures, the appliance should be located out of high traffic areas and away from furniture and draperies.

Children and adults should be alerted to the hazards of high surface temperatures and should stay away to avoid burn or clothing ignition.

• Young children should be carefully supervised when in the same room as the appliance. Toddlers, young children and others may be susceptible to accidental contact burns. A physical barrier is recommended if there are at risk individuals in the house. To restrict access to a fireplace or stove install an adjustable safety gate to keep toddlers, young children and other at risk individuals out of the room and away from hot surfaces. Any safety screen, guard, or barrier removed for servicing an appliance must be replaced prior to operating the appliance.

• Clothing or other flammable materials should not be placed on or near the appliance.

DANGER



HOT GLASS WILL CAUSE BURNS

DO NOT TOUCH GLASS UNTIL COOLED.

NEVER ALLOW CHILDREN TO TOUCH GLASS.

A barrier designed to reduce the risk of burns from the hot viewing glass is provided with this appliance and shall be installed for the protection of children and other at-risk individuals.

• A barrier designed to reduce the risk of burns from the hot veiwing glass is provided with this appliance and shall be installed for the protection of children and other at-risk individuals. If the barrier becomes damaged, the barrier shall be replaced with the manufacturer's barrier for this appliance

FOR YOUR SAFETY

• Installation and service must be performed by a qualified installer, service agency or gas supplier.

• This installation must conform to local codes or, in the absence of local codes, with the National Fuel Gas Code, ANSI Z223.1/NFPA 54, or the Natural Gas and Propane Installation Code, CSA B149.1.

• To prevent injury, do not allow anyone who is unfamiliar with the stove to operate it.

• To prevent injury, if the pilot or pilot and burners have gone out on their own, open the glass door and wait 5 minutes to air out before attempting to re-light the stove.

• Always keep the area around these appliances clear of combustible material, gasoline and other flammable liquids and vapours.

• These appliances should not be used as a drying rack for clothing or for hanging Christmas stockings/decorations.

• Due to the paint curing on the stove, a faint odor and slight smoking will likely be noticed when the stove is first used. Open a window until the smoking stops.

Always connect this gas stove to a vent system and vent to the outside of the building envelope. Never vent to another room or inside the building. Make sure the specified vent pipe is used, properly sized and of adequate height to provide sufficient draft. Inspect the venting system annually for blockage and signs of deterioration.

WARNING: Failure to position the parts in accordance with the diagrams in this booklet, or failure to use only parts specifically approved with this appliance, may result in property damage or personal injury.

WARNING: Do not operate with the glass front removed, cracked or broken. Replacement of the glass should be done by a licensed or qualified service person.

• Never use solid fuels such as wood, paper, cardboard, coal, or any flammable liquids, etc., in this appliance.

• Do not use this appliance if any part has been under water. Immediately call a qualified service technician to inspect the appliance and to replace any part of the control system or any gas control which has been under water.

• Do not abuse the glass by striking it or slamming the door shut.

• If the Q1L unit is pulled out of its installation, and the vent-air intake system is disconnected for any reason, ensure that the vent-air intake pipes are reconnected and re-sealed in accordance to the instructions noted in Initial Installation - Direct Vent

Table of Contents

Safety Precautions....2
Table of Contents....4
Codes And Approvals....5
Specifications....6
- Dimensions....6
- Rating Label Location....6

Operating Instructions....7
- Lighting Instructions....7
- Pilot Light....8
- Air Shutter....8
- Remote Controls....8
- Burner Lighting....9
- Blower Speed....9
- Normal Sounds During Operation....9

Maintenance And Service....10
- Routine Maintenance....10
- Cleaning The Glass....10
- Cleaning The Firebox....10
- Replacing the Glass....10
- Cleaning Decorative Surfaces....11
- Glass Door Removal....11
- Burner Removal....12
- Fuel Conversion....12

Initial Installation....15
- Introduction....15
- Placement and Framing....15
- Rear Vent Conversion....16
- Insulating Material....17
- Standoffs....18
- Corner Installation....19
- Installing the Tiling Flange....20
- Surround Panel Install....21
- Mantle and Non-Combustible Clearances....22
- Direct Vent....23
- Venting Fireplace Inserts....23
- Vent Termination Restrictions....24
- Venting Clearances....25
- Approved Venting Parts....25
- Horizontal Termination - Rear Vent w/ No Rise....27
- Allowable Co-Axial Vent Configurations....28
- Co-Linear Venting Adapter Kit (50-2982)....29
- Air Restrictor Settings....31
- Horizontal Termination....32
- Vertical Termination....33
- Solid Fuel Fireplace Installation....36
- Gas Line Connection and Testing....37
- Electrical Requirements....38

Secondary Installation....39
- Fire Grate and Log Set Installation....39
- Optional Porcelain Panels (50-2939) Installation & Removal....42
- Safety Screen Installation....43

Trouble Shooting....44
Parts List....45
Parts Diagram....46
Warranty....47
Installation Data Sheet....48

Codes And Approvals

DIRECT VENT ONLY: This type is identified by the suffix DV. This appliance draws all of its air for combustion from outside the dwelling, through a specially designed vent pipe system.

This appliance has been tested and approved for installations from 0 feet to 4500 feet (1372 m) above sea level.

In the USA: The appliance may be installed at higher altitudes. Please refer to your American Gas Association guidelines which state: the sea level rated input of Gas Designed Appliances installed at elevations above 2000 (610 m) feet is to be reduced 4% for each 1000 feet (305 m) above sea level. Refer also to local authorities or codes which have jurisdiction in your area regarding the de-rate guidelines.

In Canada: When the appliance is installed at elevations above 4500 feet (1372 m), the certified high altitude rating shall be reduced at the rate of 4% for each additional 1000 feet (305 m).

- This appliance has been tested by INTERTEK and found to comply with the established VENTED GAS FIREPLACE HEATER standards in CANADA and the USA as follows:

VENTED GAS FIREPLACE HEATER (Q1L; NG/LPG)

TESTED TO: ANSI Z21.88-2014/CSA 2.33-2014 VENTED GAS FIREPLACE HEATERS

CAN/CGA 2.17-M91 (R2014) GAS FIRED APPLIANCES FOR HIGH ALTITUDES

This ENVIRO Q1L Fireplace:

- Has been certified for use with either natural or propane gases. (See rating label.)
- Is not for use with solid fuels.
- Is approved for bedroom or bed sitting room. (**IN CANADA**: must be installed with a listed wall thermostat. **IN USA**: see current ANSI Z223.1 for installation instructions.)
- Must be installed in accordance with local codes. If none exist, use current installation code CAN/CGA B149 in Canada or ANSI Z223.1/NFPA 54 in the USA.
- Must be properly connected to an approved venting system and not connected to a chimney flue serving a separate solid-fuel burning appliance.

IMPORTANT NOTICE (Regarding first fire up): When the unit is turned on for the first time, it should be turned onto high without the fan on for the first 4 hours. This will cure the paint, logs, gasket material and other products used in the manufacturing process. It is advisable to open a window or door, as the unit will start to smoke and can irritate some people. After the unit has gone through the first burn, turn the unit off including the pilot, let the unit get cold then remove the glass door and clean it with a good gas fireplace glass cleaner, available at your local ENVIRO dealer.

NATIONAL FIREPLACE INSTITUTE®

NFI

CERTIFIED

www.nficertified.org

We recommend that our gas hearth products be installed and serviced by professionals who are certified in the U.S. by the National Fireplace Institute® (NFI) as NFI Gas Specialists.

Specifications

Dimensions:

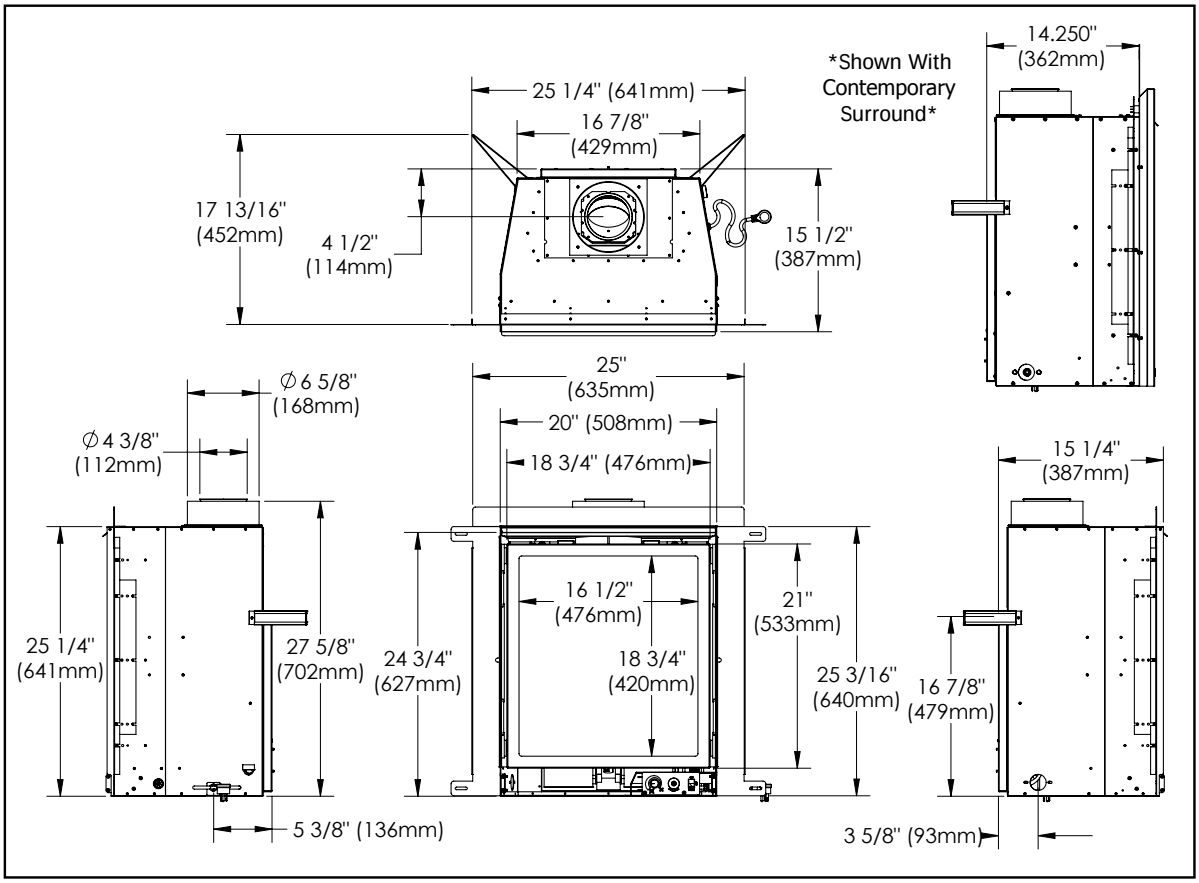

Figure 1. Q1L Dimensions - Top Vent

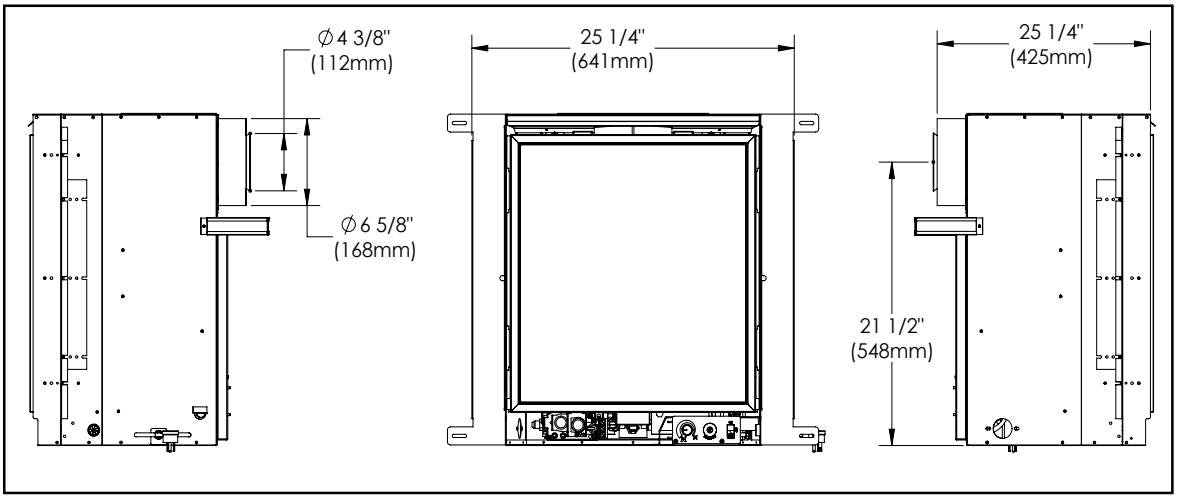

Figure 2. Q1L Dimensions - Rear Vent

Operating Instructions

For Your Safety, Read Safety Precautions And Lighting Instructions Before Operating

WARNING: IF YOU DO NOT FOLLOW THESE INSTRUCTIONS EXACTLY A FIRE OR EXPLOSION MAY RESULT, CAUSING PROPERTY DAMAGE, PERSONAL INJURY OF LOSS OF LIFE.

Rating Label & Lighting Instructions Location:

The rating label plate and lighting instructions are located under the gas valve and attached to the unit with a length of chain.

Lighting and Turning Off Instructions:

FOR YOUR SAFETY READ BEFORE LIGHTING

WARNING:If you do not follow these instructions exactly, a fire or explosion may result causing property damage, personal injury or loss of life

A. This appliance has a pilot which must be lighted by hand. When lighting the pilot, follow these instructions exactly.
B. BEFORE LIGHTING smell all around the appliance area for gas. Be sure to smell next to the floor because some gas is heavier than air and will settle on the floor.

WHAT TO DO IF YOU SMELL GAS:
Do not try to light any appliance. Do not touch any electrical switch; do not use any phone in your building. Immediately call your gas supplier from a neighbor's phone. Follow the gas supplier's instructions. If you cannot reach your gas supplier, call the fire department.

C. Use only your hand to push in or turn the gas control knob. Never use tools. If the knob will not push in or turn by hand, don't try to repair it. Call a qualified service technician. Force or attempted repair may result in a fire or explosion.
D. Do not use this appliance if any part has been under water. Immediately call a qualified service technician to inspect the appliance and to replace any part of the control system and any gas control which has been under water.

LIGHTING INSTRUCTIONS

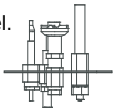

1. STOP! Read the safety information above on this label.
2. Set the thermostat to the lowest setting.
3. Turn off all electric power to this appliance.
4. Open the front control panel.
5. Turn off the gas control knob clockwise ↷ to the "OFF" position.
6. Open door. Wait flve (5) minutes to clear out any gas. Close door. Then smell for gas, including near the floor. If you smell gas, STOP! Follow "B" in the saftey information above on this label. If you don't smell gas, go to the next step.
7. Find pilot-located near the center rear of the firebox. Turn the gas control knob counter-clockwise ↶ to "PILOT". Push the gas control in fully and hold, keep knob depressed for about 30 seconds after the pilot is lit. Release knob. If pilot goes out, repeat steps 4 through 5.

WARNING: This gas valve has a lockout device, which will not allow the pilot burner to be relit until the thermocouple has cooled.
-If the knob does not pop up when released, stop and immediately call your service technician or gas supplier.
-If the pilot will not stay lit after several tries, turn the gas control knob clockwise ↷ to "OFF" and call your service technician or gas supplier.

8. Turn the gas control knob counter clockwise ↶ to the "ON" position. Flip the burner switch to "ON" then turn the "HI/LOW" knob to the desired setting.
9. Close the front control panel.
10. Turn on all electric power to the appliance.
11. Set thermostat to desired setting.

TO TURN OFF GAS TO APPLIANCE

1. Set the thermostat to the lowest setting.
2. Turn off all electric power to the appliance if service is to be performed.
3. Open the front control panel and flip burner switch to "OFF"
4. Turn the gas control knob clockwise ↷ to the "OFF" position.
5. Close the front control panel.

C-12454

Figure 3. Lighting Instruction Label

Operating Instructions

Pilot Light:

1. Turn off the gas to the fireplace. **If not recently done, remove the glass and let the unit air out for at least five (5) minutes to clear out any gas.** Turn on gas to the heater. Leak test all joints with soapy water. **NEVER USE OPEN FLAME FOR LEAK TESTING.**
2. Start the pilot by pressing the gas control knob and turning it to PILOT. While holding the gas control knob in, press the piezo ignitor several times until the pilot light starts. Hold the gas control knob in for 30 seconds. Check that the pilot has fully engulfed the thermocouple assembly (see Figure 4).
3. Start the main burner by turning the gas control knob to ON and then turn the rocker switch to ON. Check that all burner ports have flame.
4. Leak test all gas joints again.

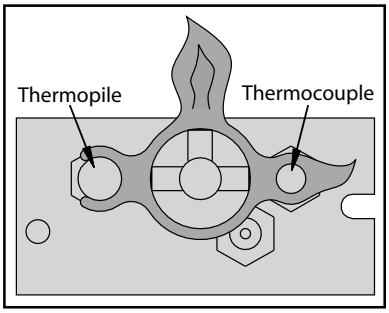

Figure 4. Pilot Flame

Air Shutter:

The air shutter adjustment lever is on the right hand side of the venturi box (see Figure 5).

The air shutter allows the amount of air coming into the fireplace to be adjusted in order to accommodate different climates and venting arrangements. Start the pilot and then the burner. Make sure the pilot flame is burning normally and none of the burner ports are plugged. Let the fireplace burn for roughly fifteen minutes and then examine the flames, compare the flames to Figure 40.

The ideal flame will be blue at the base and light orange above. The flames should be of medium height. If the flames look like this, no venturi adjustment is needed. If the flames are fairly short and mostly blue, the fireplace is getting too much air. Therefore, the air shutter should be closed (pulled out) slightly until the correct flames are achieved. Flames that are very orange, with tall, dark, stringy tips, are not getting enough air. Open (push in) the venturi until the flames clean up. If the venturi is opened, or closed all the way, and the correct flames cannot be attained, turn off the gas and contact the dealer.

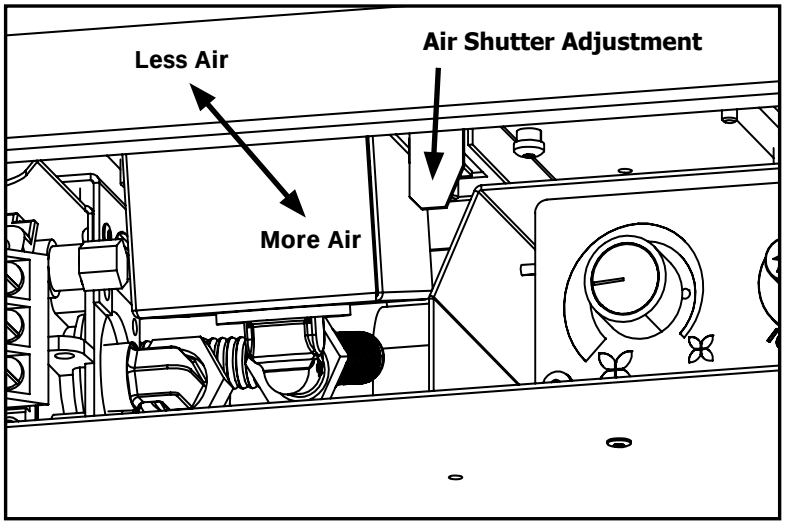

Figure 5. Air shutter adjustment lever.

Warning: Incorrect venturi adjustment may lead to improper combustion, which is a safety hazard. Contact the dealer if there is any concern about the venturi adjustment.

Remote Controls:

This fireplace can use an optional remote control or an optional cordless wall thermostat. If either of these are to be used to control the fireplace for the majority of the time, leave the ON/OFF switch (on the control panel) in the remote/thermostat position. Consult the instructions included with the remote/wall thermostat for operation guidelines.

Operating Instructions

For Your Safety, Read Safety Precautions And Lighting Instructions Before Operating

Burner Lighting:

A) Make sure the pilot is lit.
B) Turn gas control knob COUNTER CLOCKWISE to ON.
C) Flip the burner switch to ON.
D) Turn HI/LO knob to the desired flame height.
E) Turn on all electrical power to the unit.

NOTE: Check that all burner holes are lit.

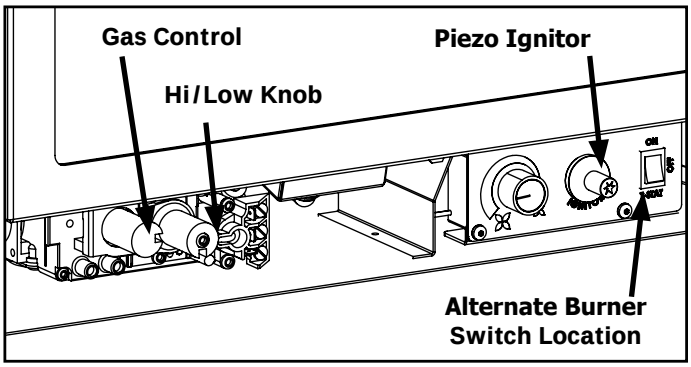

Figure 6. Control Panel

TO TURN GAS FIREPLACE OFF:

Flip switch to OFF to turn off burners only.

If the fireplace is to be turned off for the season, or for servicing, turn the gas shut off valve to OFF. DO NOT FORCE IT. If the unit is going to be serviced, turn off the electrical power to the unit as well.

NOTE: When the unit is turned on for the first time, it should be turned onto high, with the fan OFF, for the first two to four hours. This will cure the paint, logs, gasket material, and other products used in the manufacturing process. It is advised that a door or window be opened as the unit will start to smoke, which can irritate some people. After the unit has gone through the first burn, turn the unit OFF, including the pilot, and let the unit get completely cold. Then remove the glass and clean it with a good gas fireplace glass cleaner, available at your local Enviro dealer. See "Maintenance And Service; Glass Door Removal" and "Maintenance And Service; Cleaning The Glass."

Blower speed:

The blower will come on only when the fireplace is up to temperature (approximately 15 minutes). The speed of the fan can be changed by turning the fan control knob. The blower will continue to operate automatically after the unit has been shut off (approximately 25 minutes).To turn the blower off, turn the knob COUNTER CLOCKWISE until it "clicks" off (Figure 7).



Figure 7. Fan Control

It is advisable not to operate the blower below 1/3 speed as it puts a strain on the windings of the blower and running the blower at lower speeds could also cause premature fan failure.

Normal Sounds During Operation:

Table 1: Normal Sounds

Component	Sound & Reason
Q1L & Surround Panels	Creaking when heating up or cooling down.
Burner	Light pop or poof when turned off; this is more common with LP units.
Temperature Sensor	Clinking when it senses to turn the blower on or off.
Pilot Flame	Quiet whisper while the pilot flame in on.
Blower / Fan	Air movement that increase and decreases with the speed of the blower. The blower is pushing the heat from the fireplace into the room.
Gas Control Valve	Dull click when turning on or off, this is the valve opening and closing.

Maintenance And Service

Routine Maintenance:

At least once a year, run through the following procedures to ensure the system is clean and working properly. Check the burner to see if all the ports are clear and clean. Check the pilot to make sure it is not blocked by anything. The pilot flame should be blue with little or no yellow on the tips.

Warning: Clearances must be sufficient to allow access for maintenance and service

Warning: Failure to position the parts in accordance with this manual, or failure to use only parts specifically approved with this appliance may result in property damage or personal injury.

The venting system must be periodically examined; it is recommended the examination is done by a qualified agency.

Cleaning The Glass:

When the fireplace has cooled, remove the face of the fireplace along with the glass. See Maintenance And Service - Glass Door Removal. Check the gasket material on the back of the glass, making sure that it is attached and intact.

During a cold start up, condensation will sometimes form on the glass. This is a normal condition with all fireplaces. However, this condensation can allow dust and lint to cling to the glass surface. Initial paint curing of the appliance can leave a slight film behind the glass, a temporary problem. The glass will need cleaning about two weeks after installation. **Use a mild glass cleaner and a soft cloth**. **Abrasive cleaners will damage the glass and painted surfaces.** Depending on the amount of use, the glass should require cleaning no more than two or three times a season. **Do not clean the glass when it is hot.**

Cleaning The Firebox:

Remove the logs carefully, as they are very fragile. Gently remove all the coals and place on a paper towel. Vacuum the bottom of the firebox thoroughly. Carefully clean any dust off the logs and remove any lint from the burner and pilot. At this time, inspect the burner tube for cracking or severe warping. If a problem is suspected, contact the dealer. Check the logs for deterioration or large amounts of soot; a small amount on the bottom side of the logs is normal. Replace the logs and coals as in the Secondary Installation - Fire Grate and Log Set Installation section. If new/more coals are required, contact your nearest ENVIRO dealer.

Replacing the Glass:

The glass in the fireplace is a high temperature ceramic. If the glass is damaged in any way, a factory replacement is required (see Parts List). Wear gloves when handling damaged glass door assembly to prevent personal injury. Do not operate with the glass front removed, cracked or broken. Removal and replacement of the glass from the door **must** be done by a licensed or qualified service person. **The glass must be purchased from an ENVIRO dealer. No substitute materials are allowed.** Remove the door (see page 11). The replacement glass will come with a new gasket installed. Remove any silicone remnants from the door. Apply high temperature silicone to the two vertical faces of the door and install the new piece of glass with gasket (be sure to maintain edge clearances). Apply even pressure to the glass to allow the silicone to adhere to the gasket material.

Maintenance And Service

Cleaning Decorative Surfaces:

Painted and porcelain faces should be wiped with a damp cloth periodically. If a plated face has been purchased, it should be unpacked/unwrapped carefully to avoid getting anything on the surface of the finish, including cleaners, polish and finger prints. It is important to note that fingerprints and other marks can leave a permanent stain on plated finishes. **To avoid this, give the face a quick wipe with denatured alcohol on a soft cloth BEFORE lighting the fireplace.** Never clean the face when it is hot. Do not use other cleaners as they may leave a residue, which can become permanently etched into the surface.

Glass Door Removal:

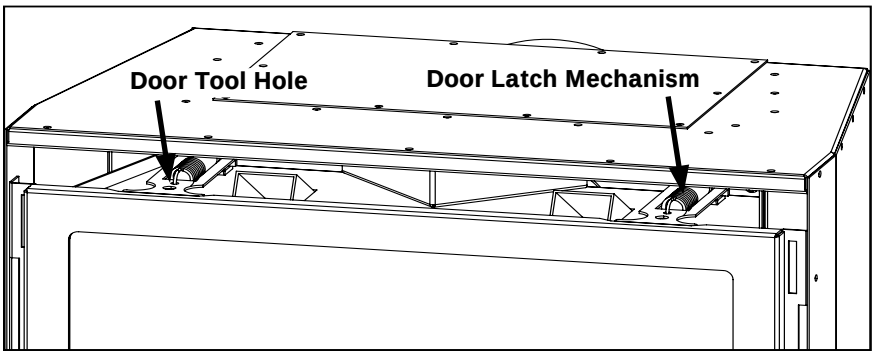

Figure 8. Top latches for glass door

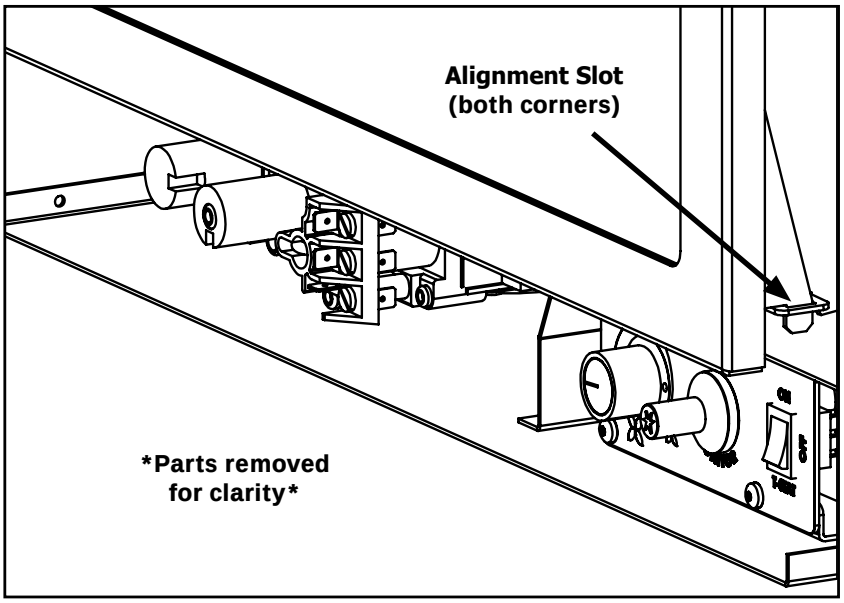

Figure 9. Bottom Alignment Slots for glass door.

In order to install the log set, and for regular cleaning, the glass door must be removed. There are two (2) door latch mechanisms on top the glass door as shown in Figure 8. Each latch has a hole at the front to use the door tool, supplied with the unit, to pull the mechanisms straight out and up. When the top latches are unhooked, lean the door forward and then lift it up out of the alignment slots at the bottom corners of the firebox, shown in Figure 9.

To replace the glass door, simply reverse the above procedure.

Warning: Do not touch or attempt to remove the glass door if the fireplace is not completely cold.

WARNING: Never operate the fireplace with the glass door removed.

Maintenance And Service

Burner Removal:

The burner may need to be removed for a few reasons, including cleaning under the burner, converting the unit to a different gas type, or to replace the burner altogether. **Proceed only when the unit has completely cooled down.**

1. Remove the glass door as shown in the Maintenance and Service - Glass Door Removal.
2. Remove the log set and fire grate as shown in Secondary Installation - Fire Grate and Log Set Installaion
3. Push the air shutter in until it stops
4. Lift the burner straight up then out.

To re-install the burner follow steps 1-4 in reverse. When placing the burner back in the unit be sure to adjust the air shutter back to the correct setting.

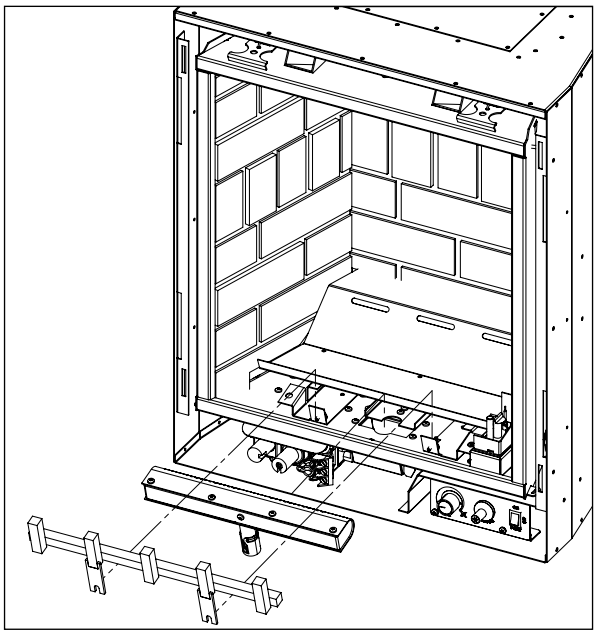

Figure 10. Removing Burner.

Fuel Conversion:

TO BE INSTALLED BY A QUALIFIED SERVICE AGENCY ONLY

Please read and understand these instructions before installing.

Warning: This conversion kit shall be installed by a qualified service agency in accordance with the manufacturer's instructions and all applicable codes and requirements of the authority having jurisdiction. If the information in these instructions is not followed exactly, a fire, explosion or production of carbon monoxide may result causing property damage, personal injury or loss of life. The qualified service agency is responsible for the proper installation of this kit. The installation is not proper or complete until the operation of the converted appliance is checked as specified in the manufacturer's instructions supplied with the kit.

Kit Parts List for all Q1 Nova models:

1 - Orifice (NG - #46 DMS or LP - 1.2 mm)
1 - Pilot Injector (NG 0.62 mm; LP 0.35 mm)
1 - Installation instruction sheet
1 - Conversion label

Carefully inspect all parts supplied with this conversion kit. If any parts have been damaged or are missing, contact your dealer, distributor or courier company to have them replaced before starting this installation.

Conversion Kit Installation:

1. Turn control knob on the gas valve to the "OFF" position and shut the gas supply off at the shut-off valve upstream of the unit. CAUTION: The gas supply must be shut off prior to disconnecting the electrical power and before proceeding with the conversion. Allow the valve and unit to cool down to room temperature.
2. Remove the glass door as shown in the MAINTENANCE AND SERVICE - GLASS DOOR REMOVAL.
3. Carefully remove the log set and fire grate.
4. Remove the burner as shown in the MAINTENANCE AND SERVICE - BURNER REMOVAL.
5. Convert the burner orifice(s):
   a) Remove the main burner orifice with a ½ inch deep socket.
   b) Put a bead of pipe-thread sealant or approved Teflon tape on the orifice threads before installing into the brass elbow.
   c) Install the new orifice(s) from the kit into the brass elbow.
6. Convert the pilot injector:
   a) Pull the pilot hood straight up to access the pilot injector.
   b) Using a 5/32" or 4 mm Allen key, remove the pilot injector.
   c) Install the new pilot injector supplied with this conversion kit. Simply screw the new injector inside the pilot hood using the Allen key,
   d) Reinstall the hood by placing the hood on the assembly, line up the key way, and snap into place.
7. Convert the SIT gas valve:

a) Remove the black protection cap from the HI/LO knob by hand shown in Figure 11.

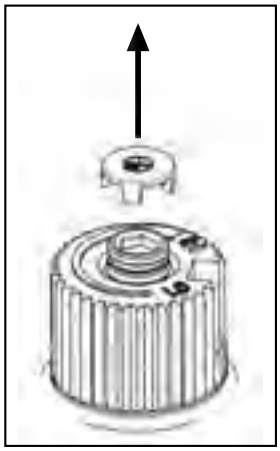

Figure 11: Removing valve cap.

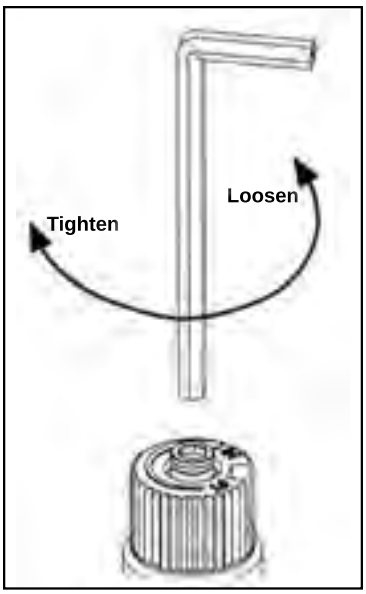

Figure 12: Removing valve screw.

b) Insert a 5/32" or 4 mm Allen wrench into the hexagonal key-way of the screw (see Figure 12), rotate it counter-clockwise until it is free and extract it.

c) Check that the screw is clean and if necessary remove dirt.

d) Flip the screw (refer to Figure 13).

e) Using the Allen wrench as shown in Figure 12, rotate the screw clockwise until a torque of 9 inch lbs. **WARNING!** Do not over tighten the screw. It is recommended that you grip the wrench by the short side.

f) Verify that if the conversion is from NG to LPG, the screw must be re-assembled with the red o-ring visible (refer to Figure 14). If the conversion is from LPG to NG, the red o-ring of the screw must be not visible.

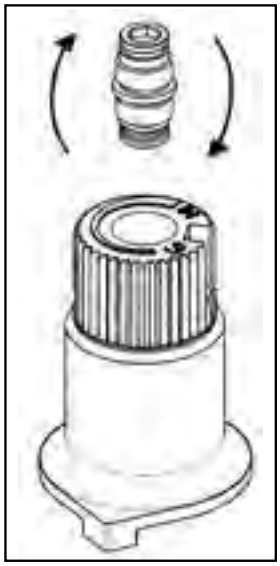

Figure 13: Flip valve screw.

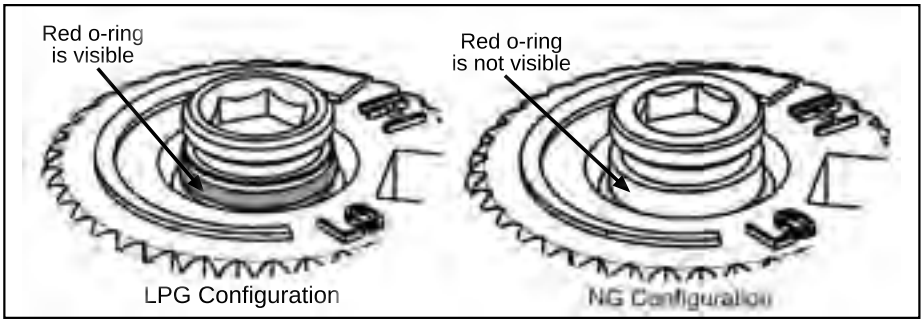

Figure 14: O-ring on valve screw.

g) Re-attach the black protection cap that was removed in step a (Figure 11).

8. Reinstall the burner, fire grate, log set, and glass door. Also refer to Secondary Installation - Fire Grate and Log Set Installation in your Owner's Manual. When re-installing the burner, ensure that the burner to pilot hood and shield relationship is similar to what is shown in Figure 15.
9. Reconnect the main gas line if it was disconnected and open the shut-off valve at the gas line to the unit.
10. Use a small brush to apply a warm soapy water solution to all gas connections (use a half dish soap and half warm water). If a gas leak is present, bubbling will occur. Gas leaks can be repaired by using an approved pipe thread sealant or approved Teflon tape. NEVER USE AN OPEN FLAME WHEN TESTING FOR LEAKS.



Figure 15. Pilot assembly beside the burner.

11. Reconnect the electrical power to the unit.
12. Relight the pilot and confirm the flame properly covers both the thermocouple and thermopile (see Figure 4, page 8). Should the pilot require adjustment, turn the adjustment screw (figure 49, page 37) clockwise to decrease or counterclockwise to increase until the correct flame is achieved.
13. Relight the main burner in both the "HI" and "LO" positions to verify proper burner ignition, operation and proper flame appearance (figure 58, page 41). Confirm the inlet and manifold pressures are within the acceptable ranges as directed in section Intial Intallation - Gas Line Connection and Testing. If the Q1 has been installed at an altitude higher than 2000ft (610m) it is required to de-rate the unit accordingly:

In the USA: The appliance may be installed at higher altitudes. Please refer to your American Gas Association guidelines which state: the sea level rated input of Gas Designed Appliances installed at elevations above 2000 (610 m) feet is to be reduced 4% for each 1000 feet (305 m) above sea level. Refer also to local authorities or codes which have jurisdiction in your area regarding the de-rate guidelines.

In Canada: When the appliance is installed at elevations above 4500 feet (1372 m), the certified high altitude rating shall be reduced at the rate of 4% for each additional 1000 feet (305 m).

14. MAKE SURE that the conversion label is installed on or close to the rating label to signify that the unit has been converted to a different fuel type.

Initial Installation

QUALIFIED INSTALLERS ONLY

Introduction:

This section of the owner's manual is for the use of qualified technicians only. Fireplace placement, hearths, facing, mantels, and venting terminations will be covered, as well as the gas and electric systems. There are several installation safety guidelines that must be adhered to. Please carefully read the safety precautions at the front of this manual.

NOTE: The Q1L comes as a top vent unit but can be converted to a rear vent.

Warning: Clearances must be sufficient to allow access for maintenance and service.

Placement and Framing:

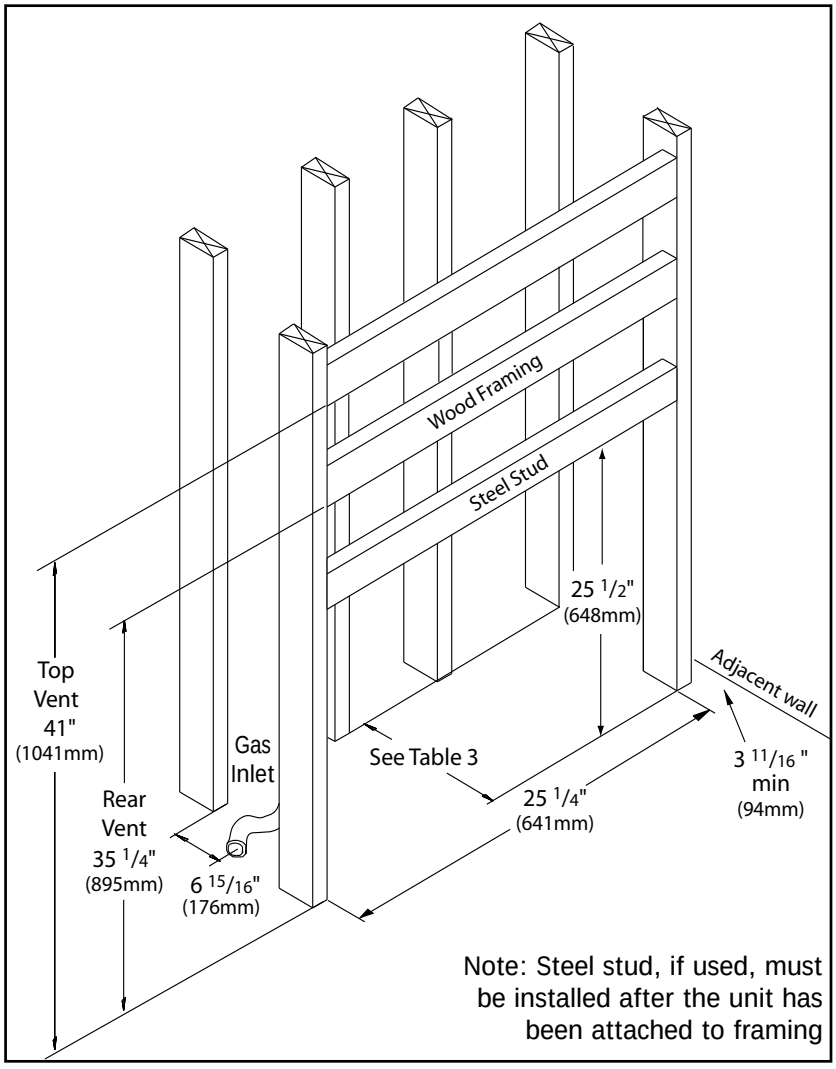

Figure 16. Dimensions for Framing the Firebox

The location for the fireplace can be along a wall, raised or at floor level, or in a corner. There are specific framing measurements for each situation.

The basic opening should have the dimensions shown in Figure 16.

The fireplace must have a strong and level surface to be placed on. The surface should be made of wood or a non-combustible material, not carpet.

The framing boards may touch the top and back standoffs, but **only the supplied insulating material can be placed between the frame and the standoffs.** A horizontal steel stud may be used at the height shown to support the bottom edge of the non-combustible material (see page 22).

The gas line, ⅜ inch NPT, should be Brought to the left side of the fireplace. The location should be chosen so the fireplace will be at least 36 inches (91.4 cm) from drapes, doors and other combustibles. The framed opening must be a minimum of 3 11/16″ inches (9.4 cm) from the nearest perpendicular wall (sidewall to the edge of the opening).

Firebox Framing	
Width	25¼″ [64.1 cm]
Framing Height - Rear Vent	35¼″ [89.5 cm]
Framing Height - Top Vent	41″ [104.1 cm]
Gas Inlet (Distance from Back	6 15/16″ [17.6 cm]

Table 2. Framing Dimensions.

Framing Depth [Based on 1/2″ thick facing]	
Surround Panel	**Depth**
Trimmable Contemporary	16 13/16″ [42.7 cm]
Modern	17 3/16″ [43.7 cm]
Minimal (3 or 4 Sided)	17 11/16″ [44.9 cm]
No Surround	17 15/16″ [45.6 cm]

Table 3. Framing Depths.

QUALIFIED INSTALLERS ONLY

Rear Vent Conversion:

For smaller openings the Q1L can be converted from a top vent to a rear vent unit.

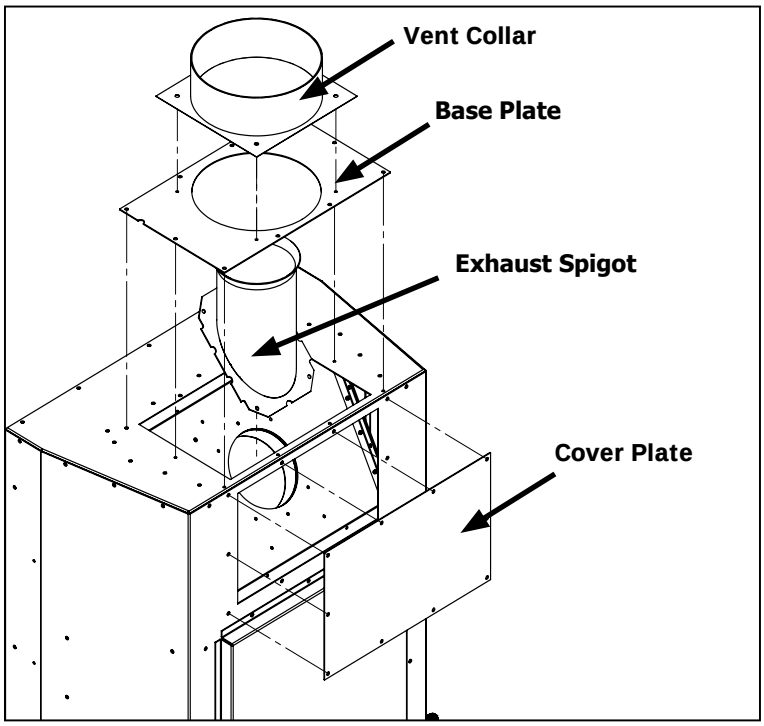

Figure 17. Vent Conversion - Step 1

Step 1: Using a T20 screwdriver remove the vent collar, base plate, cover plate and exhaust spigot (28 screws total) as shown in Figure 17.

Step 2: Switch the removed parts around as shown in Figure 18 and re-install all 28 screws. To correctly install the base plate keep the locating notch on each side at the bottom. Also note the exhaust spigot uses a lower set of holes when setup as a rear vent.

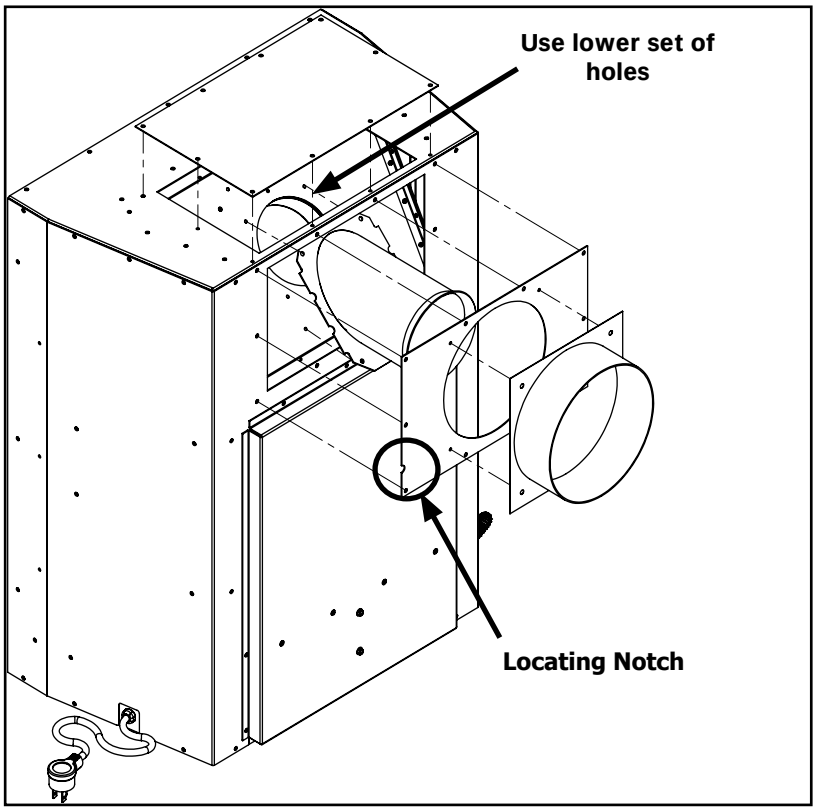

Figure 18. Vent Conversion - Step 2

QUALIFIED INSTALLERS ONLY

Insulating Material:

Depending on the chosen vent configuration, either one or both pieces of insulating material supplied with the unit are required for correct installation.

Rear Vent: When using the rear vent configuration both the ceramic board and fiberglass insulation are required. Place the ceramic board on top of the unit first and then place the insulation on top of the ceramic board as shown in Figure 19.

Top Vent: When using the top vent configuration only the figerglass insulation is required. Cut a notch in the insulation, to fit around the vent collar, and place on top of the unit as shown in Figure 20.

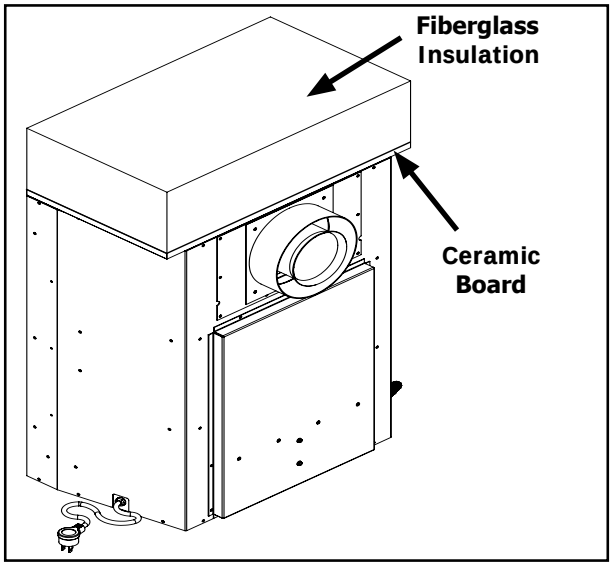

Figure 19. Unit Insulation - Rear Vent

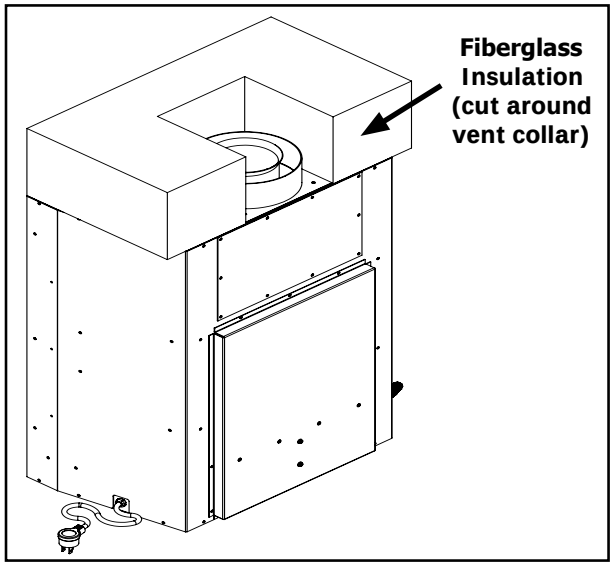

Figure 20. Unit Insulation - Top Vent

QUALIFIED INSTALLERS ONLY

STANDOFFS:

The Q1L is supplied with two sets of standoffs that serve as a framing guide and **must be used** when the unit is being installed as a fireplace. The front set of standoffs mount to sides of the unit (see Figure 21) and can be adjusted as needed to account for the thickness of the wall material. The rear standoffs attach to the back corners of the unit and are not adjustable. **Combustible material can touch the standoffs but must not encroach past them**. If the Q1L is being installed into a pre-existing masonary fireplace it is not necessary to use the standoffs. Installation of the standoffs will require a T20 screwdriver. Remove the installed screws in the noted locations, place the standoff over the holes, and re-install the screws.

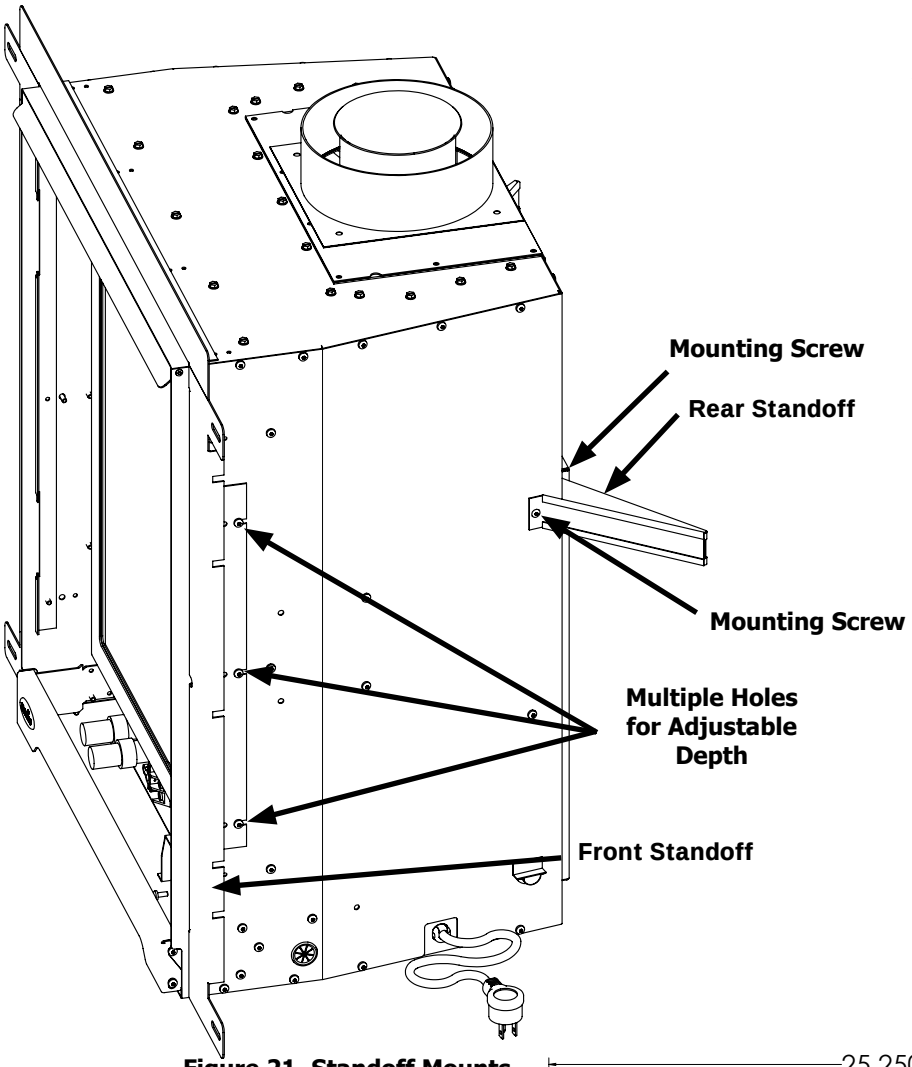

Figure 21. Standoff Mounts

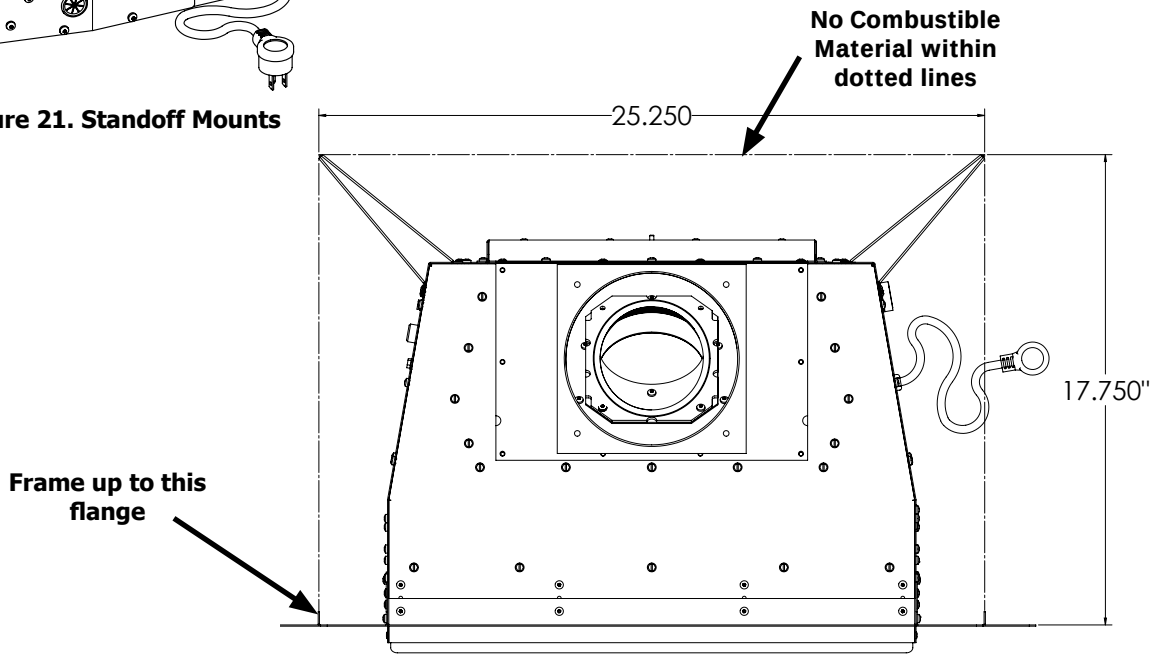

Figure 22. Area created by stanoffs

Corner Installation:

The dimensions for installing a fireplace in the corner of a room are depicted in Figures 23 and 24 and listed in table 4 below. The dimensions will vary depending on the surround panel used, refer to Initial Installation - Adjusting Install Depth to adjust installation depth as needed. Refer to "Initial Installation - Allowable Co-axial Vent Configurations" for allowable pipe lengths.

Do not interfere with the structural integrity of the walls.

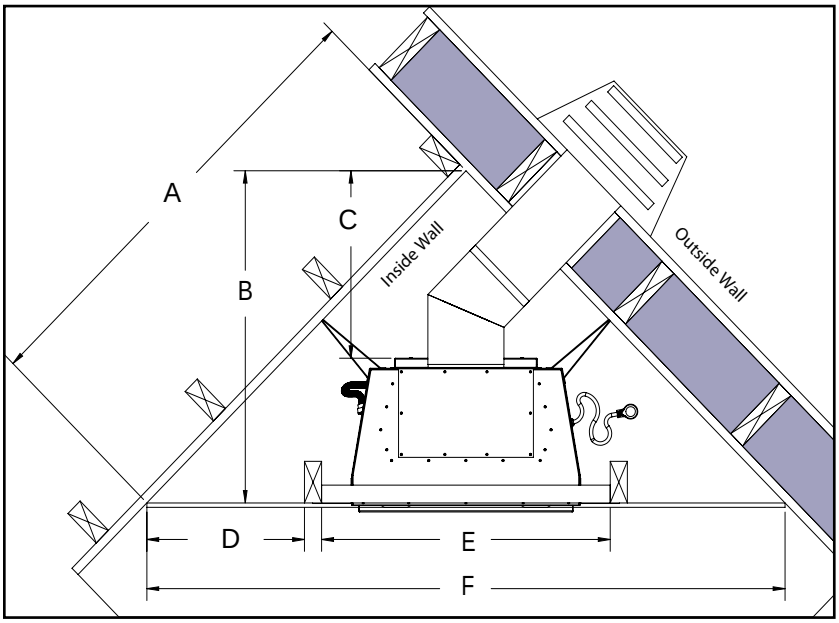

Figure 23. Dimensions for a corner installation, rear vented.

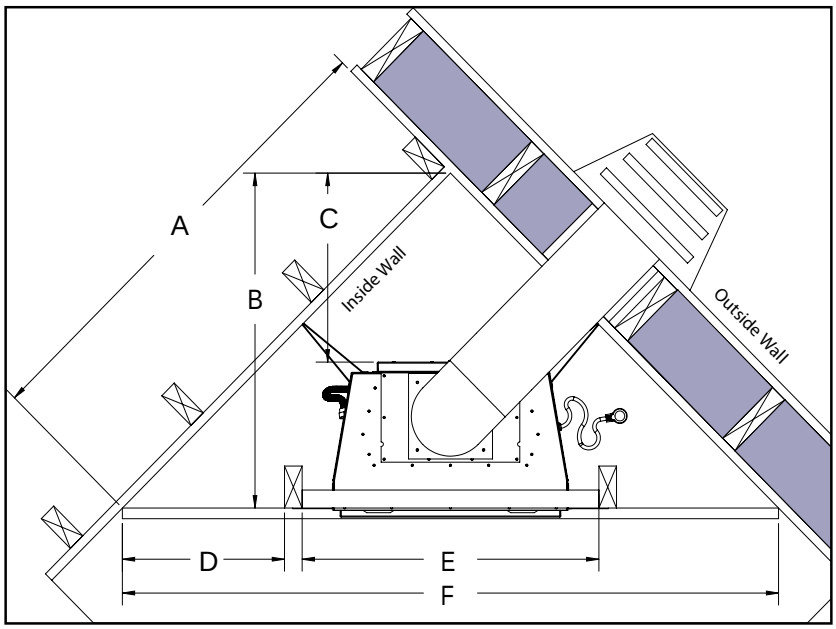

Figure 24. Dimensions for a corner installation, top vented.

Corner Installation Dimensions (Top or Rear Vent)	
Dimension - C [Set]	15¾" (260mm)
Dimension - E [Set]	25¼" (641mm)
Minimal Panel (3 or 4 sided)	
Dimension - A	43 7/16" (1103mm)
Dimension - B	30 11/16" (779mm)
Dimension - D	16 9/16" (421mm)
Dimension - F	61⅜" (1559mm)
Modern or Contemporary Panel	
Dimension - A	42 7/16" (1078mm)
Dimension - B	30" (762mm)
Dimension - D	15⅞" (403mm)
Dimension - F	60" (1524mm)
No Surround Panel [1/2" Facing]	
Dimension - A	43 3/16" (1097mm)
Dimension - B	30½" (775mm)
Dimension - D	16 5/16" (414mm)
Dimension - F	61" (1549mm)

Table 4. Corner Install Dimensions

Installing the Tiing Flange:

Clean Face Install

The Q1 is shipped with the Tiling Flanges packaged at the back of the unit. If the unit is being installed as a fireplace you must use the Tiling Flanges and Rear Standoffs. The Tiling Flanges double as the Side Standoffs. Take the three flanges out of the packing foam and install them onto the unit in the desired position. There are three positions the Tiling Flanges can be set to (see Figure 32). Measure the non-combustable and tiling material to determine which setting will work best for the install. With a T20 screwdriver, install the flanges as shown in Figure 31 using the T20 screws provided in the Manual Bag. The top and bottom screws that hold the surround mounts will need to be removed and re-used to install the Tiling Flanges.

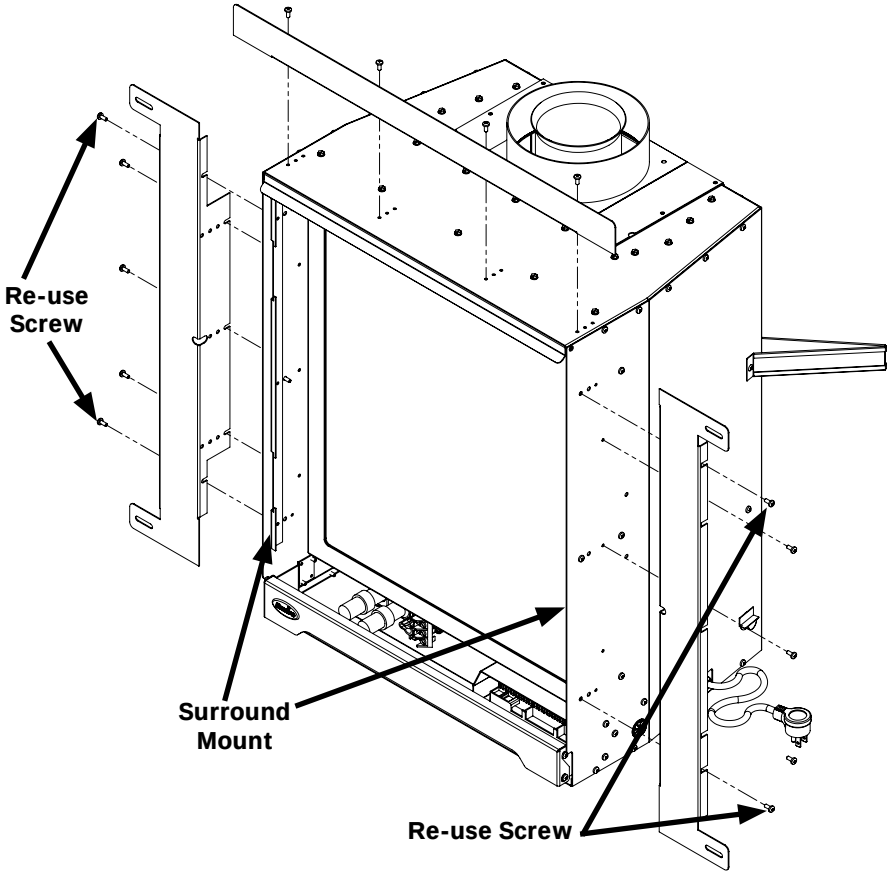

Figure 25. Tiling Flange Install.

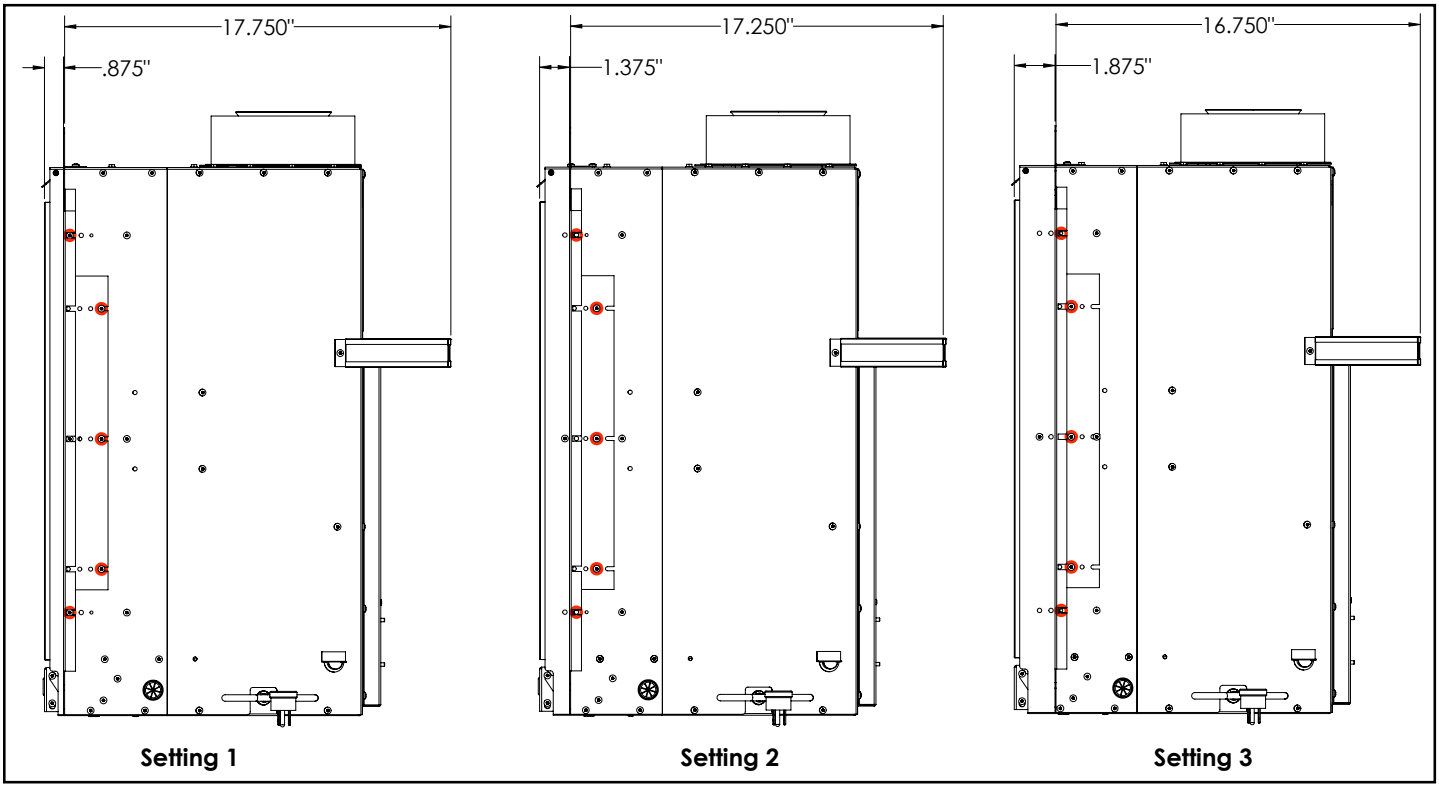

Figure 26. Tiling Flange Settings.

Initial Installation

QUALIFIED INSTALLERS ONLY

Surround Panel Install:

The Q1 is shipped ready to be installed as a clean face unit. To install a surround panel a few parts will need to be removed.

1. Remove the safety screen by lifting up and out.
2. Use a T20 screwdriver to remove the two (2) screws on each side of the Control Cover as shown in Figure 27.
3. Use the same screw driver to remove the eight (8) T20 screws that hold the Louver to the top of the cabinet.
4. Refer to the surround panel install sheet for further instruction.

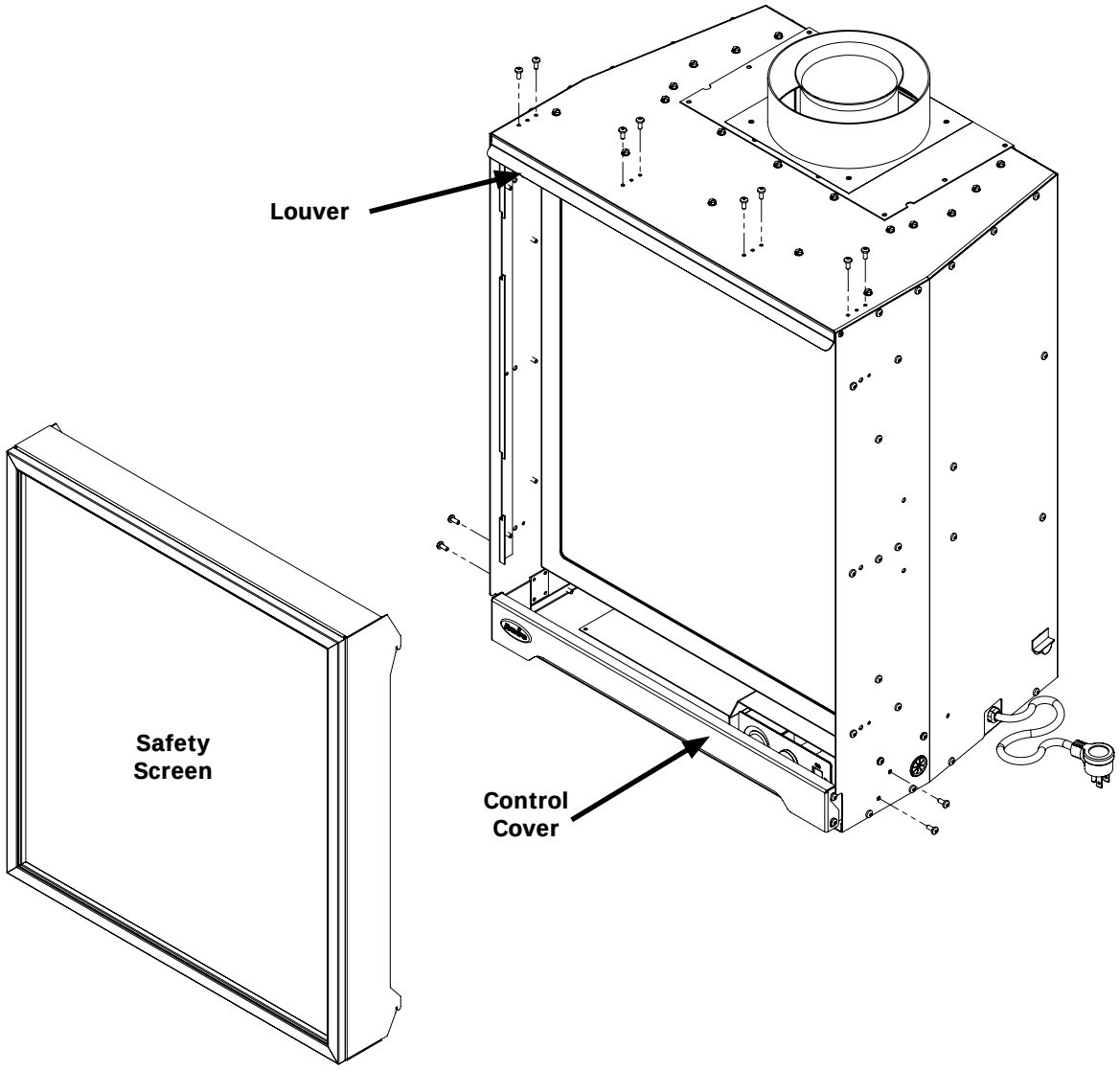

Figure 27. Surround Panel Install.

QUALIFIED INSTALLERS ONLY

Mantle & Non-Combustible Clearances:

When installing the Q1 as a zero clearance fireplace the correct clearances and materials must be used:

Above Unit: A minimum 10" of ½" thick non-combustible facing material, with a R-Value no less than 0.26, must be used (see Figure 28).

In Front of Unit: A minimum 12" of 1¼" thick non-combustible material, with a R-Value no less than 2.27 (K-value no less than .55), must be used when the unit is either sitting on the floor or raised within 2" of the floor. Approved 1" thick Q1 floor protection is available separately under part number 50-3016. When raising the unit 2" - 4" above the floor a minimum 12" of ¾" thick material, with a R-Value no less than 1.36 (K-value no less than .55), must be used. If raising the unit higher than 4" from the floor, any combustible floor material may be used.

Adjacent/Sidewall: There must be a minimum distance of 7" from the side of the firebox door to an adjacent wall composed of combustible material (see Figure 28).

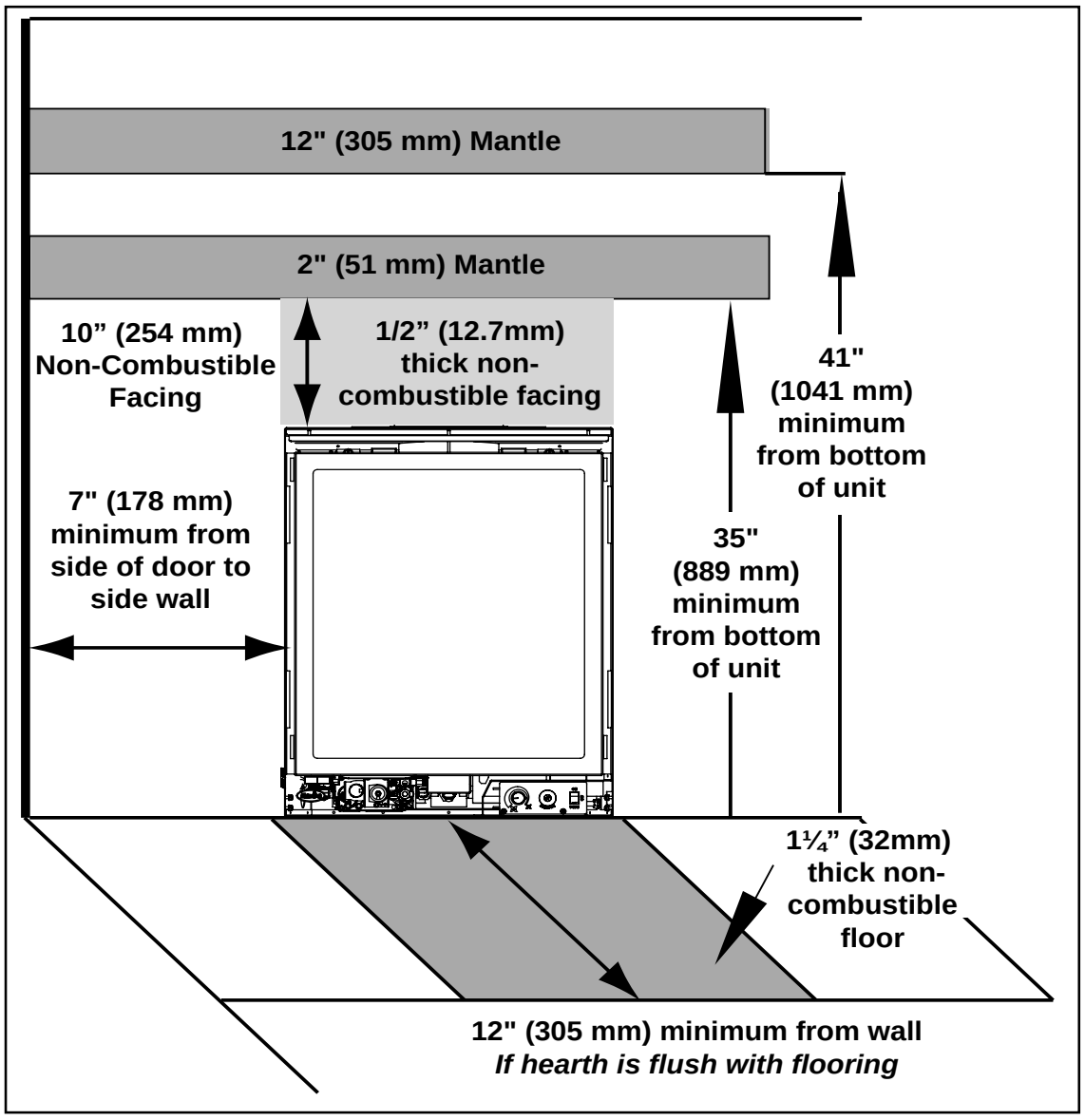

Figure 28 . Non-Combustible Clearances

Initial Installation

QUALIFIED INSTALLERS ONLY

Mantle: It is not necessary to install a mantle, but if one is desired the guidelines as shown in Figures 28 and 29 must be followed.

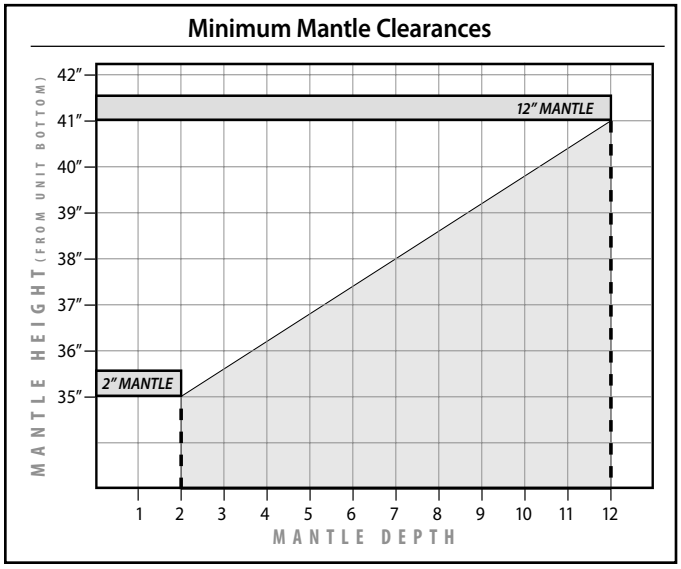

Figure 29. Mantle Clearances

Direct Vent:

WARNING: This appliance has been designed to draw room air for proper heat circulation from the bottom of the unit, and out the top front. Blocking or modifying these openings in any way can create hazardous situations.

The vent length for the Q1L must be between 7″ (18 cm) and 44ft (13.4 m). This model is vented with co-axial 4″ intake, 6 5/8″ exhaust aluminum or stainless steel approved rigid vent leading into a vertical or horizontal termination cap. The flue collar of this model will fit inside of a standard 4″ x 6 5/8″ vent and must be either correctly interlocked or fastened, with three screws directly to the vent.

The Q1L may also be converted to a fireplace insert with the use of a co-linear vent adapter kit (50-2982) see Initial Installation - Co-Linear Venting Adapter Kit. When converted to co-linear venting the lenth of vent must be between 8′ (2.44m) and 40′ (12.19m). The insert model is vented with a 3″ intake and a 3″ exhaust aluminum or stainless steel approved flex vent leading into a vertical termination cap only. The flue collars of this model will fit inside of a standard 3″ vent and must be fastened directly to the vent with three screws. The exhaust vent and air intake are both located on the top of the unit.

Check periodically that the vents are unrestricted. Also ensure that all direct vent pipes have been properly sealed and installed after routine inspection or cleaning. The air intake and exhaust pipes must be installed in the correct locations on the top of the Q1L.

Venting Fireplace Inserts:

When using the co-linear venting adapter kit (50-2982) the Q1L may be installed and vented into any solid fuel fireplace that has been installed in accordance with the National, Provincial/State and local building codes and has been constructed of noncombustible materials. Please reference the information in Table 10 and Figures 43. An approved chimney liner and rain cap must be used. A throat connector or flashing must be installed to ensure a tight seal, top performance, safety and efficiency. Carefully follow the manufacturer's instructions that accompany the chimney liner kit. Use double walled aluminum flex vent (3″ flex conversion piece and 4″x 6 5/8″ cap) from the following approved products; M&G DuraVent DirectVent Pro. If necessary, remove the vent collar plate from the top of the insert and connect it securely to the liner with sheet metal screws. Check for any tears in the liner at this point. IMPORTANT: The screws that hold the vent collar plate in its approved position must be installed.

NOTE: If the Q1L unit is pulled out of its installation, and the vent-air intake system is disconnected for any reason, ensure that the vent-air intake pipes are re-sealed with high-temperature sealant and reconnected with three (3) sheet metal screws evenly spaced.

QUALIFIED INSTALLERS ONLY

VENT TERMINATION RESTRICTIONS:

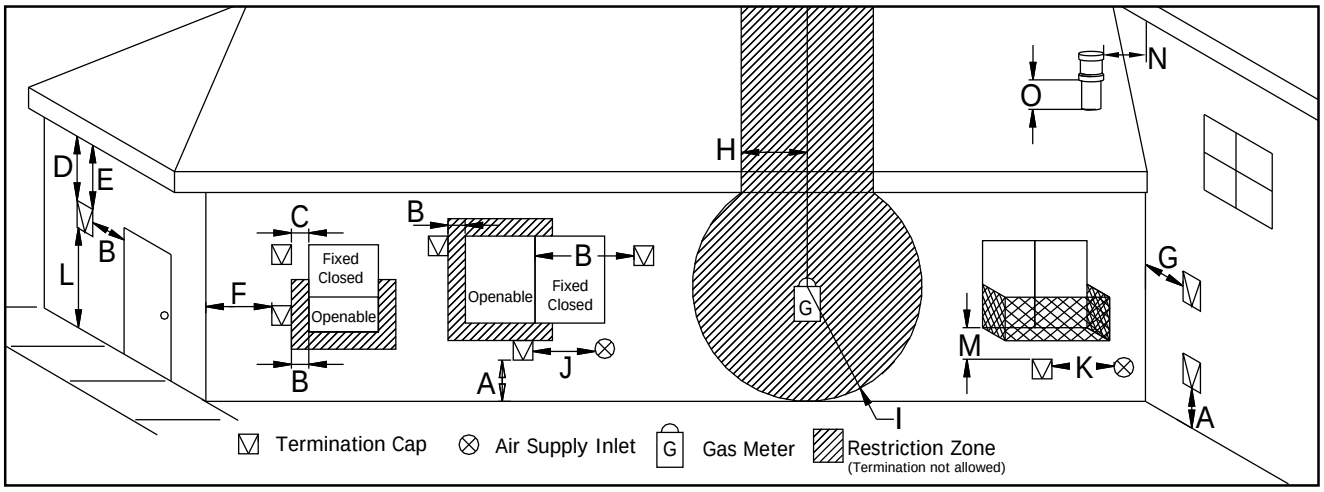

Figure 30. Vent Termination Restrictions, refer to Table 5.

Table 5: Vent termination clearances.

Letter	Canadian Installation [1]	US Installation[2]	Description
A	12 in (30 cm)		Clearance above grade, verandah, porch, deck, or balcony.
B	12 in (30 cm)	9 in (23 cm)	Clearance from window or door that may be opened.
C	12 in (30 cm)*		Clearance from permanently closed window (to prevent condensation).
D	24 in (60 cm)*		Vertical clearance to ventilated soffit located above the terminal, within a horizontal distance of 2 ft (60 cm) from center line of terminal.
E	18 in (45 cm)*		Clearance to unventilated soffit.
F	12 in (30 cm)*		Clearance to outside corner.
G	12 in (30 cm)*		Clearance to inside corner.
H	3 ft (91 cm) within a height of 15 ft (4.5 m) above the meter/ regulator assembly	3 ft (91 cm) within a height of 15 ft (4.5 m) above the meter/ regulator assembly*	Clearance to each side of center line extended above meter/regulator assembly.
I	3 ft (91 cm)	3 ft (91 cm)*	Radial clearance around service regulator vent outlet.
J	12 in (30 cm)	9 in (23 cm)	Clearance to non-mechanical air supply inlet to building, or the combustion air inlet to any other appliance.
K	6 ft (1.83 m)	3 ft (91 cm) above if within 10 ft (3 m) horizontally	Clearance to mechanical air supply inlet.
L	7 ft (2.13 m)[t]	7 ft (2.13 m)*[t]	Clearance above paved sidewalk or paved driveway located on public property.
M	12 in / 30 cm[+]	12 in / 30 cm*[+]	Clearance under verandah, porch, deck, or balcony.
N	12 in (30 cm)*		Clearance horizontally to any surface (such as an exterior wall) for vertical terminations.
O	12 in (30 cm)		Clearance above roof line for vertical terminations.

[1] In accordance with the current CSA B149, Natural Gas and Propane Installation Code.
[2] In accordance with the current ANSI Z223.1 NFPA 54, National Fuel Gas Code.
* These numbers are only estimates.
[t] A vent shall not terminate directly above a side walk or paved driveway that is located between two single family dwellings and it serves both dwellings.
[+] Permitted only if verandah, porch, deck, or balcony is fully open on a minimum of two sides beneath the floor.

Clearances are in accordance with local installation codes and the requirements of the gas supplier.

NOTE: Venting terminals shall not be recessed into walls or siding.

Initial Installation

QUALIFIED INSTALLERS ONLY

Venting Clearances:

A 1" (25 mm) clearance to combustibles must be maintained around any vertical vent pipe. Around a horizontal vent pipe, the clearance to combustibles should be 2" (51 mm) above and 1½" (38 mm) on the sides and bottom. When combustible materials are directly above a 90° elbow, 3" (76 mm) of clearance are necessary.

Table 6. Vent Pipe Minimum Clearances.

	Vertical Pipe to the Side Walls	Horizontal Pipe to the Sides & Bottom	Above an Elbow Above the Unit	Above an Elbow Not Above the Unit	Above Horizontal Vent Pipe	Wall Frame 8" (203mm) or less
Hard Pipe	1" (25.4 mm)	1½" (38.1 mm)	3" (76.2 mm)	3" (76.2 mm)	2" (51 mm)	10"x10" (25x25cm)

A 10" (254 mm) x 10" (254 mm) frame (see Figure 31) will assure the proper support and spacing for the vent pipe as it passes through the wall. Installations in Canada require that a wall thimble be used for passing through walls and ceilings. All sealing and vapour barriers must comply with local building codes.

The configuration of the venting pipes depends on the locations of walls, ceilings, and studs. However, the pipes cannot be of arbitrary length and arrangement. Because the length of the vertical and horizontal sections dramatically affects the burning efficiency of the fireplace, certain guidelines have been set in Initial Installation - Allowable Co-Axial Vent Configurations. Venting terminals can not be recessed into a wall or siding.

WARNING: This gas appliance must not be connected to a chimney flue serving a separate solid-burning appliances.

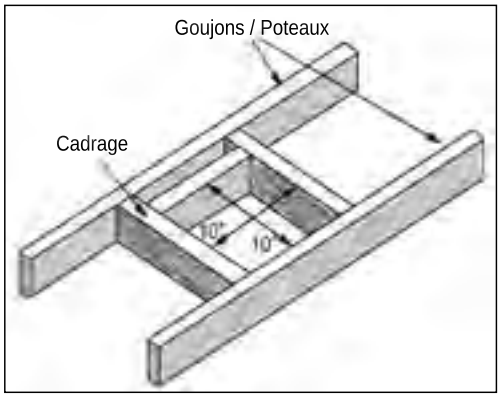

Figure 31. Vent Framing For Wall or Ceiling.

Approved Venting Parts:

Table 7: Approved Vent Manufacturers

Manufacturer	Trade Name	Nominal Sizes
American Metal Products	AmeriVent Direct	4" - 6 5/8"
ICC	EXCELDirect	4" - 6 5/8"
Security Chimneys International LTD	Secure Vent	4" - 6 5/8"
Selkirk Metalbestos	Direct-Temp	4" - 6 5/8"
M&G DuraVent	DirectVent Pro	4" - 6 5/8"

The Q1L fireplace has been tested and certified for use with AMERICAN METAL PRODUCTS "AMERIVENT DIRECT", M&G DURAVENT DIRECTVENT PRO, SECURITY CHIMNEY'S "SECURE VENT DIRECT VENT SYSTEM" and SELKIRK "DIRECT-TEMP VENT SYSTEM" kits are available for horizontal and vertical venting. When planning an installation, it will be necessary to select the proper length of vent pipe for the particular requirements.

WARNING: Do not mix parts from different vent manufacturers' systems.

QUALIFIED INSTALLERS ONLY

EXCEPTION TO WARNING: This product has been evaluated by Intertek for using a DirectVent Pro starting collar in conjunction with Secure Vent, Direct-Temp, AmeriVent Direct, and EXCELDirect venting systems. Use of these systems with the DirectVent Pro starting collar is deemed acceptable and does not affect the Intertek WH listing of the appliance.

Table 8: Vent part numbers (Must state if galvanized or black wanted, PART NUMBERS).

DirectVent Pro	Direct-Temp	Secure Vent	Ameri Vent Direct	Description
908	4DT-6	SV4L6		6" pipe length
			4D7	7" pipe length
907	4DT-9			9" pipe length
906	4DT-12	SV4L12	4D12	12" pipe length
904	4DT-24	SV4L24	4D2	24" pipe length
903	4DT-36	SV4L36	4D3	36" pipe length
902	4DT-48	SV4L48	4D4	48" pipe length
945	4DT-EL45	SV4EBR45	4D45B	45° elbow, black
990	4DT-EL90	SV4EBR90	4D90B	90° elbow, black
950	4DT-VS	SV4VS		Vinyl siding standoff/sheild
942	4DT-WT	SV4RSN	4DWT	Wall thimble
953	4DT-SC	SV4FC	4DSC	Storm collar
963	4DT-FS	SV4BF	4DFSP	Fire stop
988	4DT-WS/B	SV4BM	4DWS	Wall strap/support/band
970	4DT-HKA	SV0SHK	4DHTK1	Horizontal termination kit (SD: Basic Kit, SEL: Kit A, SC: Standard Kit)
911				11" to 14 ⅝" pipe, adjustable
	4DT-AJ		4D12A	4" to 10" pipe , adjustable
		SV4LA12		1½" to 12" pipe , adjustable
943	4DT-AF6		4DF	Flashing, 0/12 to 6/12 roof pitch
943S	4DT-AF12		4DF12	Flashing, 7/12 to 12/12 roof pitch
		SV4FA		Flashing, 1/12 to 7/12 roof pitch
		SV4FB		Flashing, 8/12 to 12/12 roof pitch
943F		SV4F		Flat flashing
991	4DT-HVC			High wind vertical termination
985	4DT-HHC			High wind horizontal termination
978	4DT-VKC	SV0FAK	4DVTK	Vertical termination kit
971	4DT-HKB	SV0SHK2	4DHTK2	Horizontal termination kit (SD: Kit A, SEL: Kit B, SC: Kit)

QUALIFIED INSTALLERS ONLY

Horizontal Termination - Rear Vent with no Vertical Rise

The Q1L can be installed in rear vent applications with no vertical rise* within the parameters as shown in Figures 32 and 33.

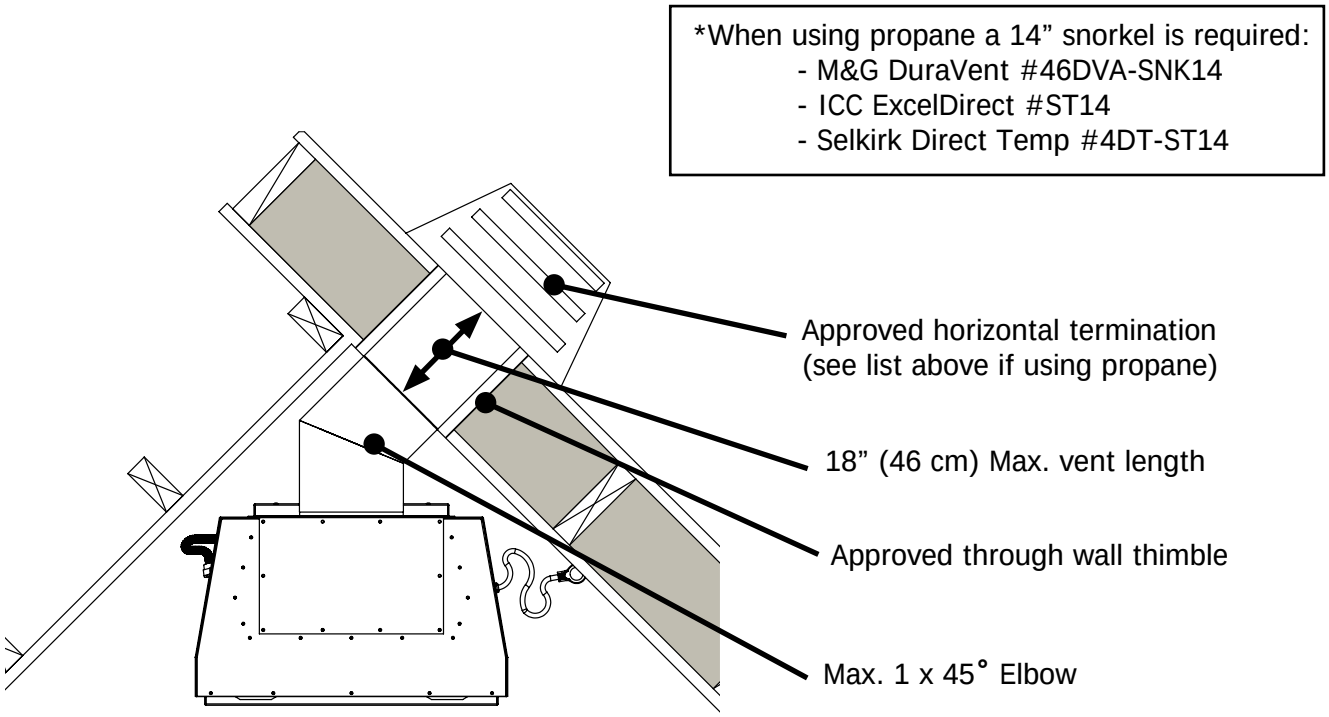

Figure 32. Corner Rear Vent - No Vertical Rise

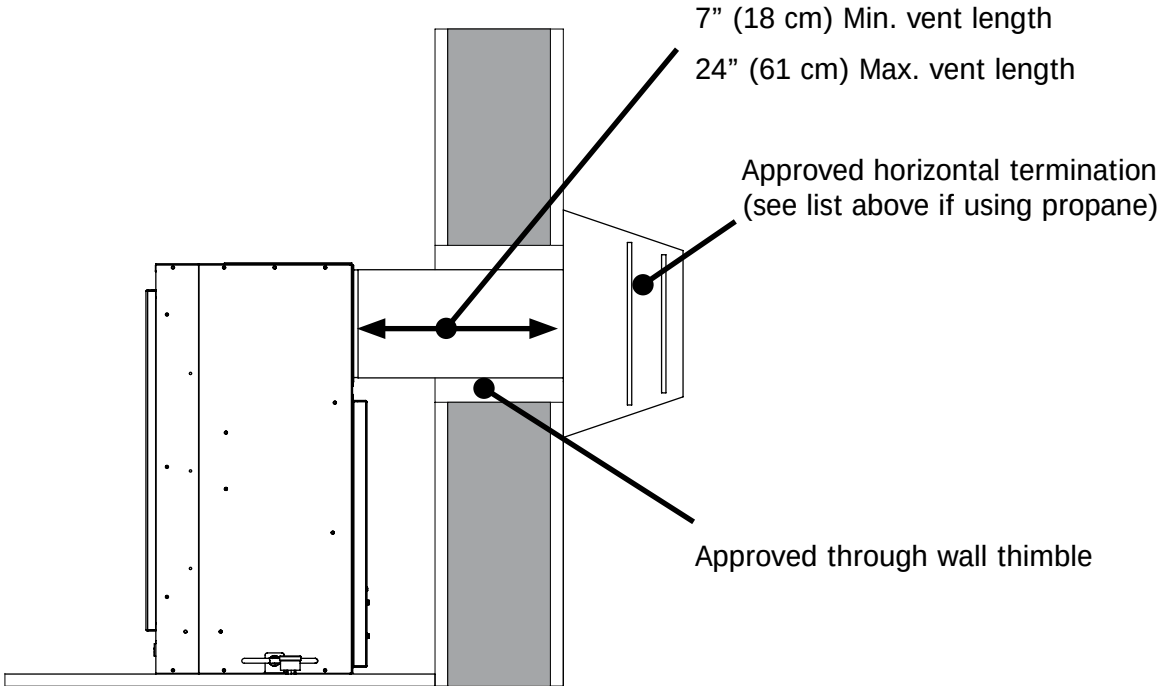

Figure 33. Flat to Wall Rear Vent - No Vertical Rise

QUALIFIED INSTALLERS ONLY

Allowable Co-Axial Vent Configurations:

Figures 34 & 35 show the range of possible vent configurations if the unit is top or rear vented, for vertical and horizontal terminations. Any layout that remains within the shaded areas is acceptable. Having the fewest number of elbows is ideal, as they tend to disrupt air movement. Using 45˚ elbows is preferable to using 90˚ elbows. Also, a shorter vent system will perform better than a longer one. When top vented, the total length of horizontal vent pipe can not exceed 14 feet (4.27m) and the total vent length can not exceed 44ft (13.4m). Any combination of rise and run can be used as long as it lays within the shaded area (a total of two (2) 90˚ elbows or four (4) 45˚ elbows can be used. In addition to what is shown, if a 90˚ elbow is used in the horizontal plane, 3 feet (91.4cm) must be subtracted from the allowable horizontal run (for each 45˚ elbow, 1½ feet must be subtracted).

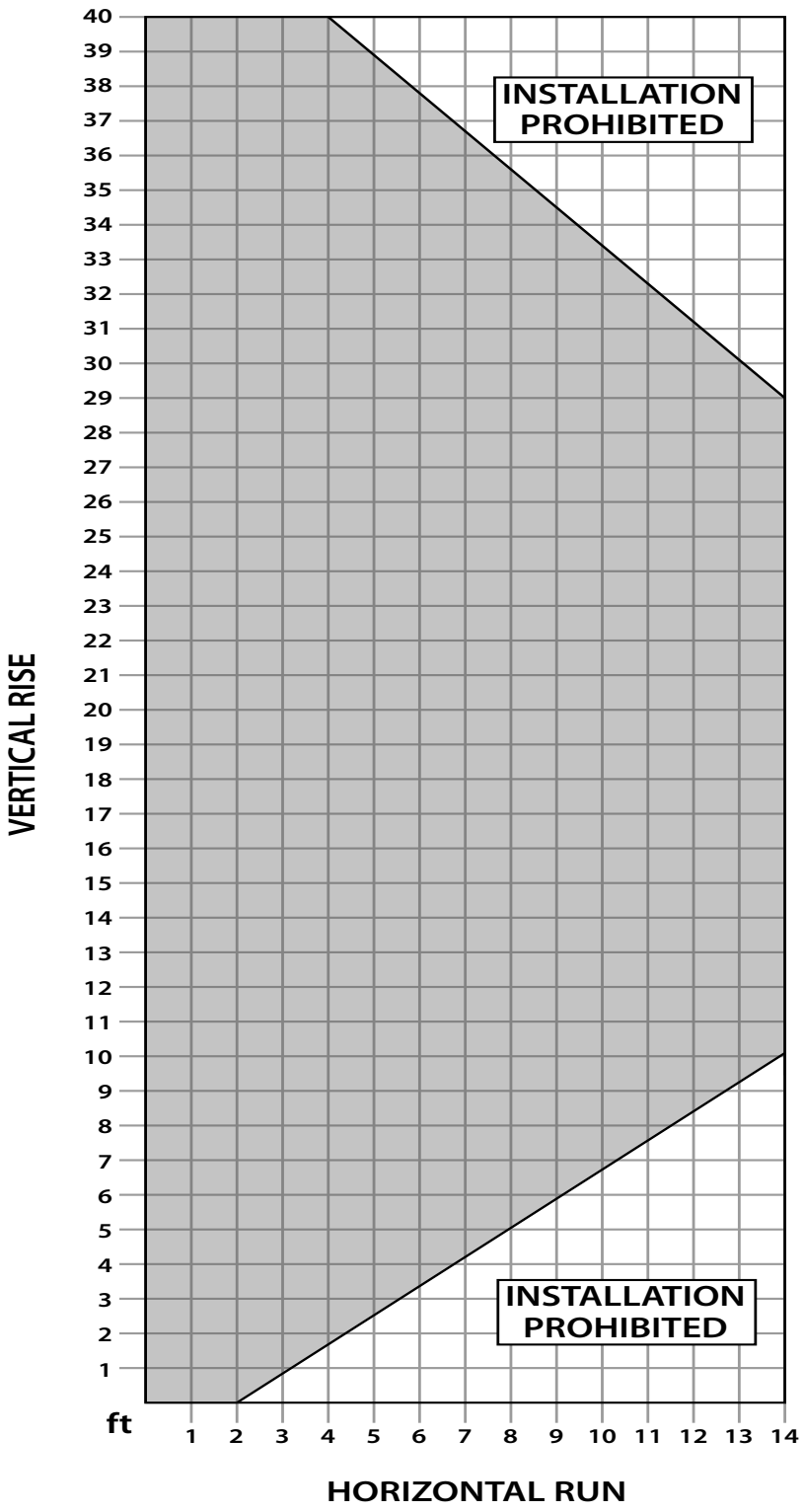

Figure 34. Possible Vent Configurations for Top Vented Vertical and Horizontal Terminations.

Note: Air restrictors (supplied with the unit) are required for vertical venting runs of 8ft (2.44m) or taller. See Air Restrictor Settings for more information

Note: Minimum length of co-linear venting is 8ft (2.44m) and maximum length is 40ft (12.19m)

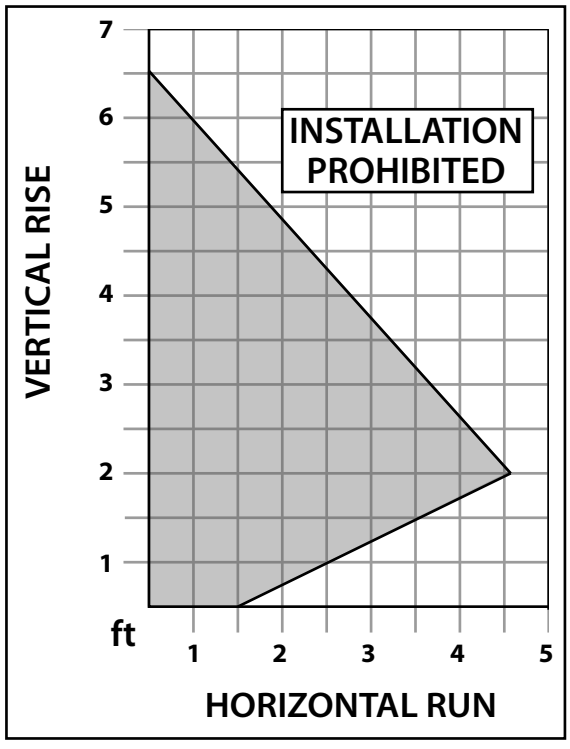

Figure 35. Possible Vent Configurations for Rear Vented Vertical and Horizontal Terminations.

QUALIFIED INSTALLERS ONLY

CO-LINEAR VENTING ADAPTER KIT (50-2982):

The Q1L can be converted from solid co-axial venting to 3" (76mm) flexible co-linear venting to allow for installation into exisiting masonary fireplaces (see Figures 37-39). Co-linear venting **can not** be used in combustible chimney installations. This adapter kit is for **vertical terminations only** and can't be connected to a chimney flue serving a seperate solid-fuel burning stove or appliance. To adjust the depth of the unit please refer the the INITIAL INSTALLATION - INSTALLING THE TIING FLANGE section of the manual.

Note: The co-linear adapter kit can only be used in the top vent configuration

WARNING: Failure to position the parts in accordance with these diagrams or failure to use only parts specifically approved with this appliance may result in property damage or personal injury.

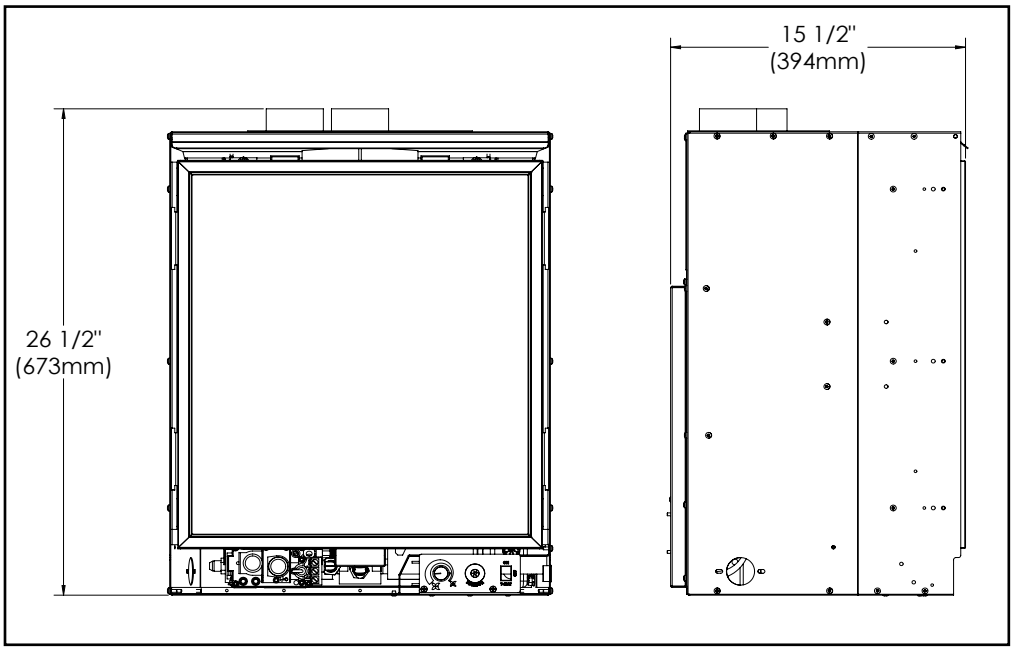

Figure 36: Q1 Insert Dimensions

Adapter Kit Contents:

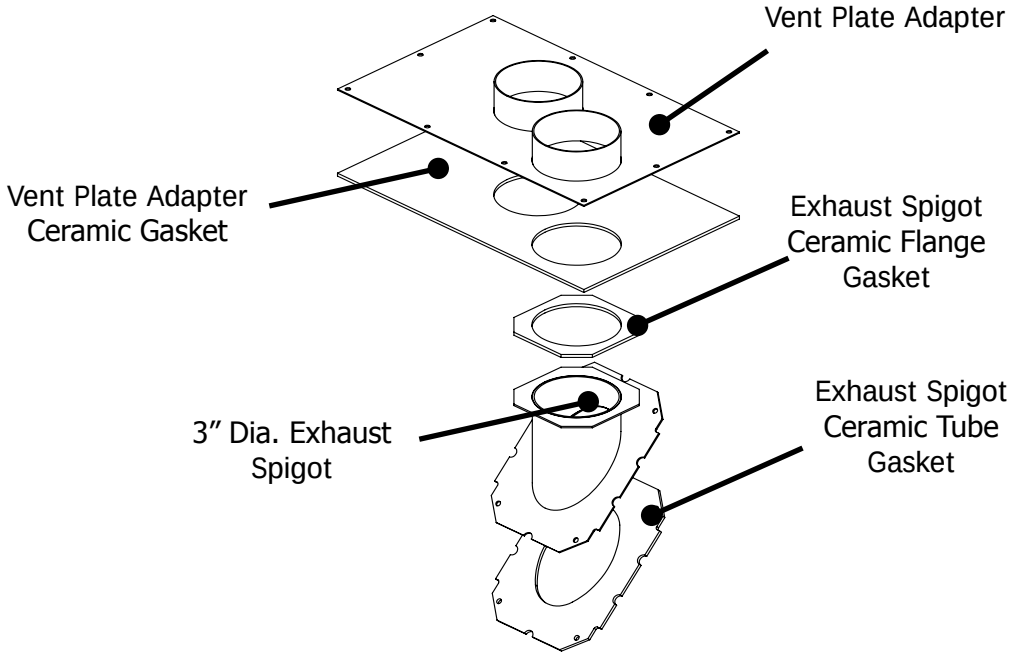

Figure 37: Co-Linear Venting Kit Contents

Adapter Kit Installation:

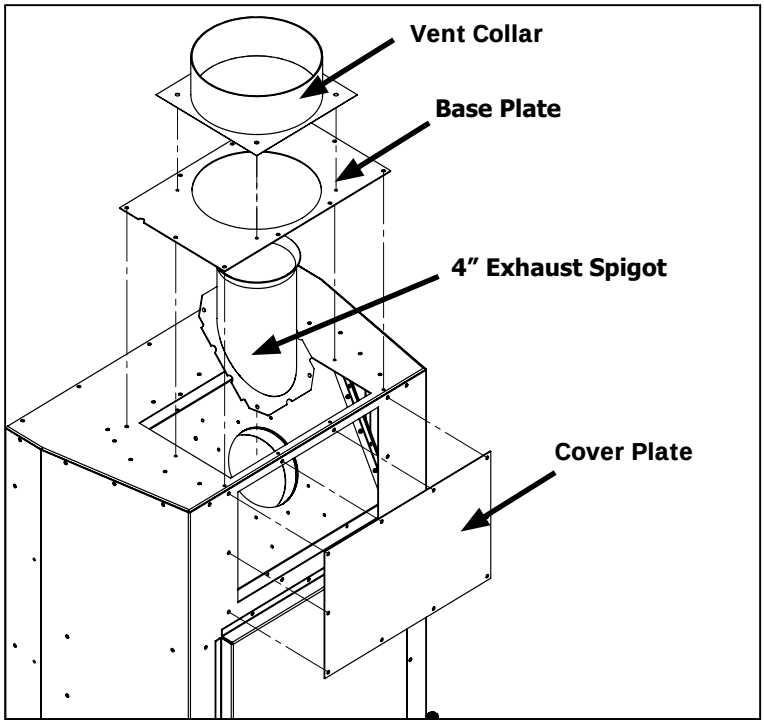

Figure 38: Removal of Co-Axial Venting

Step 1: Using a T20 screwdriver remove the vent collar, base plate, cover plate and 4" exhaust spigot (28 screws total) as shown in Figure 38. The vent collar, base plate, and 4" exhaust spigot will no longer be used.

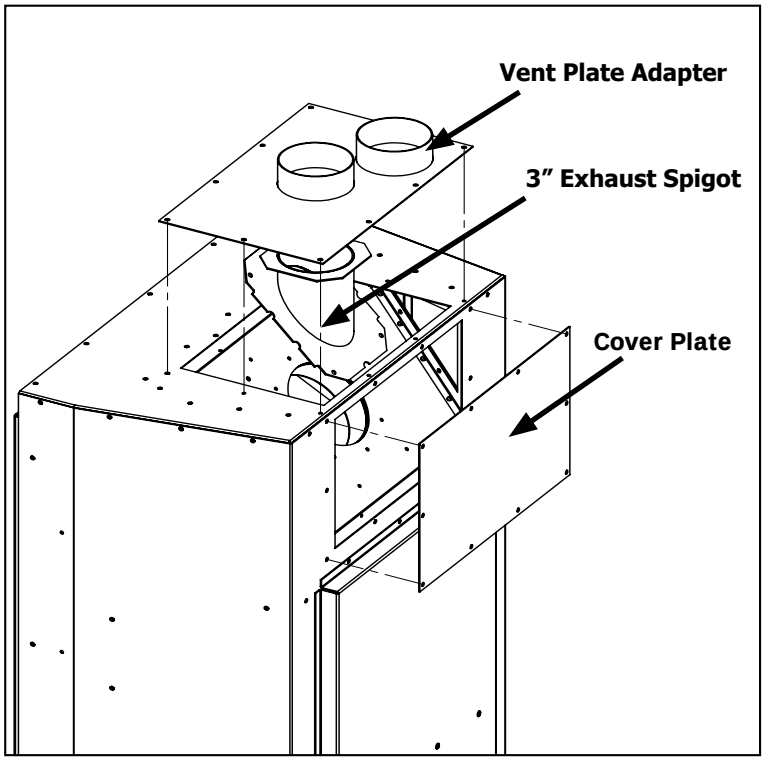

Figure 39: Installation of Co-Linear Vent Kit

Step 2: Install the components supplied in the adapter kit as shown using the screws that had been removed from the unit in Step 1. The gasket on the bottom side the vent plate adapter and exhaust spigot flange gasket will be sandwiched together when properly installed.

QUALIFIED INSTALLERS ONLY

Air Restrictor Settings:

When installing the Q1L with 8ft (2.44M) or more of vertical venting, either co-axial or co-linear, it may be necessary to restrict the fresh air supply in the firebox to control the combustion and flame appearance. Using the pair of air restrictors supplied with the unit, install them on each side of the firebox and adjust to the correct setting as outlined in the figure and table below. To install the air restrictors first you must remove the log set, air diffuser, and creamic brick panels (see Secondary Installation - Optional Porcelain Panels Installation and Removal) then remove the set screws as shown on each side of the firebox. Next, install the restrictors at the correct setting and tighten the set screws to hold them in place.

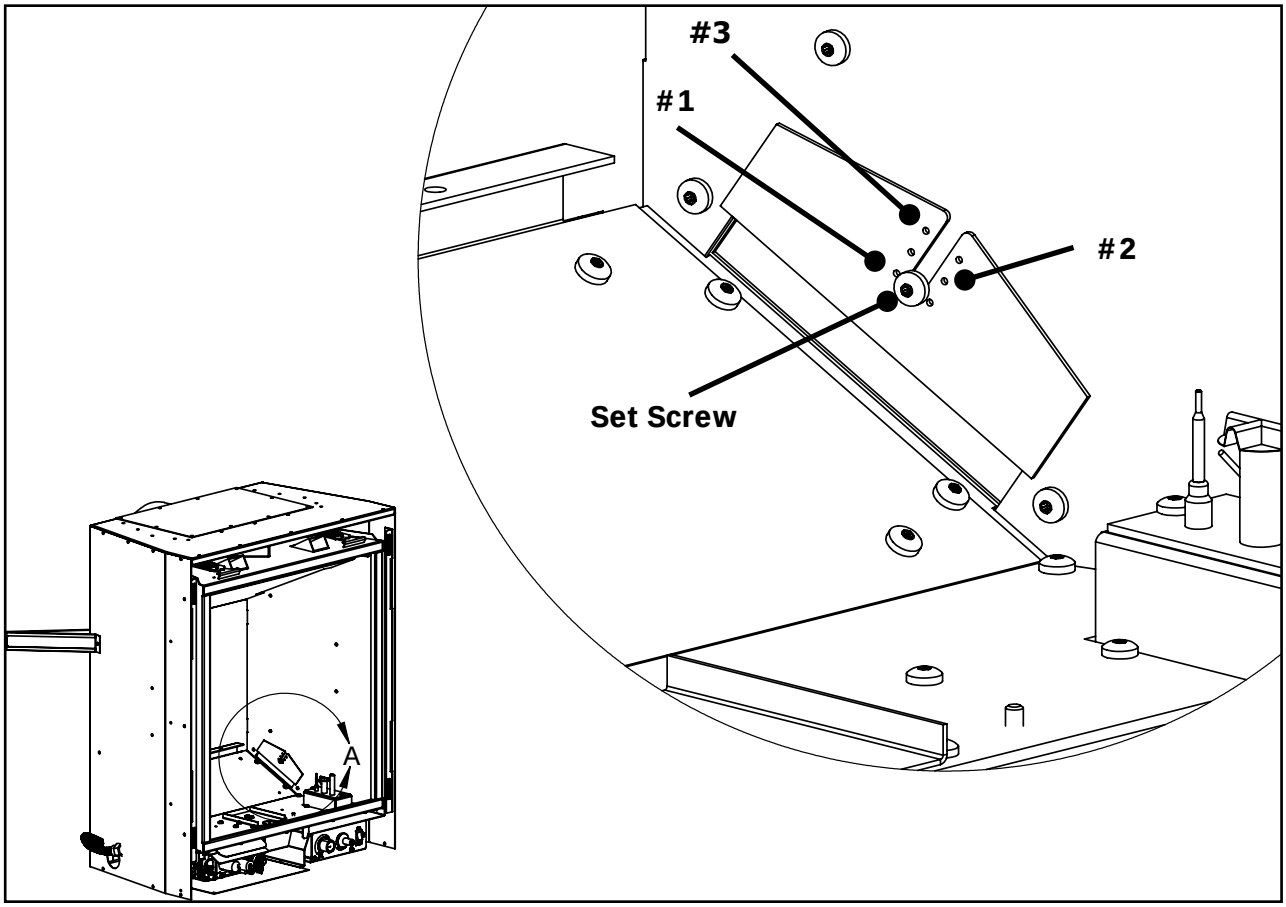

Figure 40: Installation of Air Restrictors

Table 9: Air Restrictor Settings

Air Restrictor Settings		
Length of Vertical Vent	**Propane**	**Natural Gas**
Less than 8ft (2.44m) co-linear or co-axial	No Restriction Required	No Restriction Required
8ft (2.44m) - 20ft (6.1m) co-linear or co-axial	No Restriction Required	No Restricition Required
Through Roof Termination, more than 20ft (6.1m) to 40ft (12.19m) co-linear	Setting #2	Setting #3
Through Roof Termination, more than 20ft (6.1m) to 40ft (12.19m) co-axial	Setting #1	Setting #1

QUALIFIED INSTALLERS ONLY

HORIZONTAL TERMINATION:

NOTES:

1. **Horizontal pipes must not be level. For every 12 inches (305 mm) of horizontal travel (away from the stove), there should be at least ¼ inch (6.4 mm) of vertical travel. Never allow the vent to run downward, as this could cause high temperatures or even present the possibility of a fire.**
2. The exterior of the horizontal vent termination must not be blocked or obstructed.
3. If the vent termination is not being attached to wood, the four wood screws provided should be replaced with material appropriate fasteners.
4. For buildings with vinyl siding, a vinyl standoff should be installed between the vent cap and the exterior wall. Attach the vinyl siding standoff to the horizontal termination. Note that the termination bolts onto the flat portion of the standoff, providing an air space between the wall and the vent termination. The air gap prevents excessive heat from possibly melting the vinyl siding.
5. Horizontal pipes must be supported every 3 feet (914 mm). Plumber's all round strap will suffice.

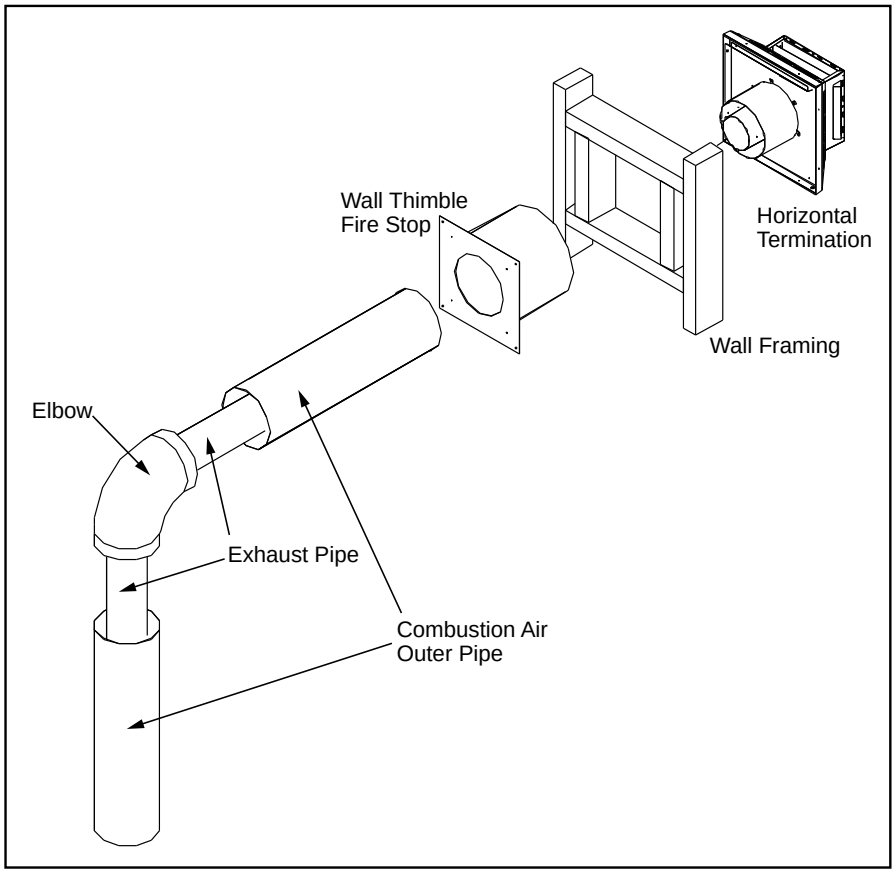

Figure 41. Horizontal Vent Termination

6. When running horizontal pipe, clearances to combustibles must be maintained 1½ inches (38 mm) sides, 1½ inches (38 mm) bottom, and 2 inches (51 mm) top.

Step 1. Set the fireplace in the desired location. Check to determine if wall studs will be in the way when the venting system is attached. If this is the case, the location of the fireplace may have to be adjusted or the venting may have to be offset.

Step 2. Direct vent pipe sections are designed with special twist-lock connections. Dry fit the desired combination of pipe and elbows to the appliance adaptor.

Step 3. With the pipe in the correct position and attached to the fireplace, mark the wall for a 10 inches (25.4 cm) x 10 inches (25.4 cm) square hole (see Figure 31). The center of the hole should match the center line of the horizontal pipe. Cut and frame the hole in the exterior wall where the vent will be terminated. If the wall being penetrated is made of a non-combustible material (i.e. masonry or concrete) a 7 inches (17.8 cm) hole is acceptable.

NOTE: For M&G DuraVent push the pipe sections together, then twist about ¼ turn, making sure the two sections are fully locked. Wrap all seams with foil ducting tape.

Step 4. With the hole now framed, the wall thimble installed, and the pipe extending into the wall, proceed to the outside. Attach the termination to the pipe using RTV and Mil-Pac or Rutland No 78 Stove and Gasket Cement to seal joints. The vent pipe must extend into the vent cap at least 1¼ inches (3.2 cm). Secure the connection between the vent cap and the pipe by attaching the two (2) sheet metal straps, which extend from the vent cap assembly to the outer wall of the vent pipe. Bend any remaining portion of the strap back towards the vent cap. Security Secure Vent uses a twist lock cap.

Step 5. Position the horizontal vent termination in the center of the 10 inches (25.4 cm) square hole and attach to the exterior wall with the four screws provided. The arrow on the vent termination should be pointing up. Run a bead of non-hardening mastic around the edges of the vent cap, to make a seal with the wall. Ensure the proper clearances to combustibles have been maintained.

VERTICAL TERMINATION:

Step 1. Check the instructions for required clearances (air spaces) to combustibles when passing through ceilings, walls, roofs, enclosures, attic rafters, or other nearby combustible surfaces. Do not pack air spaces with insulation.

Step 2. Set the gas appliance in the desired location. Drop a plumb bob down from the ceiling to the position of the appliance flue exit, and mark the location where the vent will penetrate the ceiling. Drill a small hole at this point. Next, drop a plumb bob from the roof to the hole previously drilled in the ceiling, mark the spot where the vent will penetrate the roof. Determine if ceiling joists, roof rafters, or other framing will obstruct the venting system. You may wish to relocate the appliance, or to offset, to avoid cutting load bearing members.

Step 3. To install the Round Support Box/Wall Thimble in a flat ceiling, cut a 10 inch (25.4 cm) square hole in the ceiling, centered in the hole drilled in Step 2. Frame the hole as shown in Figure 31.

Step 4. Assemble the desired lengths of black pipe and elbows necessary to reach from the appliance adapter up through the Round Support Box. Insure that all pipe and elbow connections are in their fully twist-locked position.

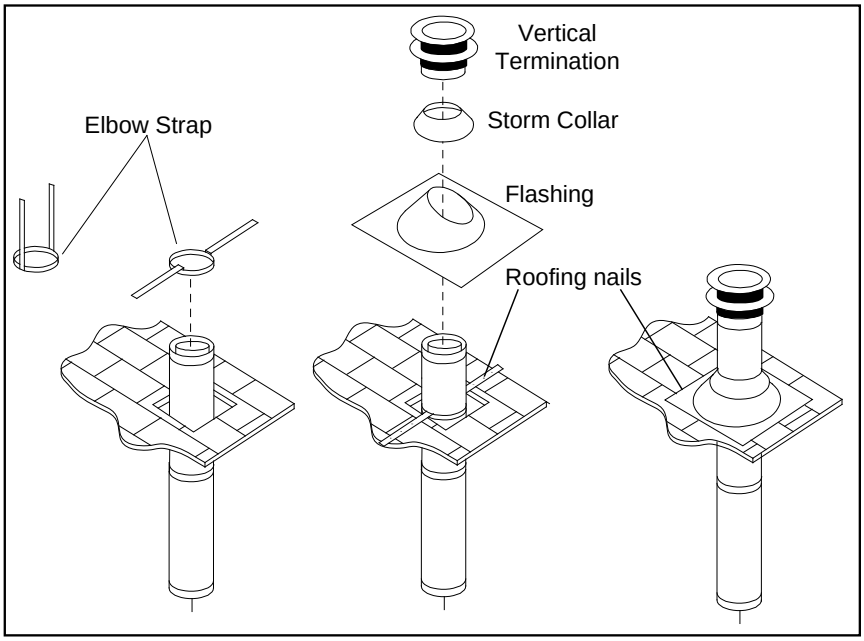

Figure 42. Vertical Vent Termination

QUALIFIED INSTALLERS ONLY

STEP 5. Cut hole in the roof centered on the small hole placed in the roof from Step 2. The hole should be of sufficient size to meet minimum requirements for Clearance to Combustibles, as specified. Continue to assemble lengths of pipe and elbows necessary to reach from the ceiling support box up through the roof line. Galvanized pipe and elbows may be utilized in the attic, as well as above the roof line. The galvanized finish is desirable above the roof line, due to the higher corrosion resistance.

STEP 6. Once the pipe sections have been joined, and run up through the hole in the roof, slip an elbow strap over the exposed sections, bend the support straps outwards, and push the elbow strap down to the roof level, as shown in Figure 42. Tighten the clamp around the pipe section. Use a level to make sure the pipe is truly vertical. With roofing nails, secure the support straps to the roof. Seal the nails holes heads with non-hardening mastic. Trim the excess length of the support straps that extend out beyond the edge of the flashing.

STEP 7. Slip the flashing over the pipe section protruding through the roof. Secure the base of the flashing to the roof with roofing nails. Use a non-hardening sealant between the uphill edge of the flashing and the roof. Insure the roofing material overlaps the top edge of the flashing. Verify that you have at least the minimum clearance to combustibles at the roof line.

STEP 8. Continue to add pipe sections until the height of the vent cap meets the minimum code requirements. Refer to Figure 43 and Table 10. Note that for steep roof pitches, the vent height must be increased. In high wind conditions, nearby trees, adjoining roof lines, steep pitched roofs, and other similar factors can result in poor draft, or down drafting. In these cases, increasing the vent height may solve the problem.

STEP 9. Slip the storm collar over the pipe, and push it down to the top of the roof flashing as shown in Figure 42. Use the non-hardening sealant around the joint between the pipe and the storm collar.

STEP 10. Twist-lock the vent cap.

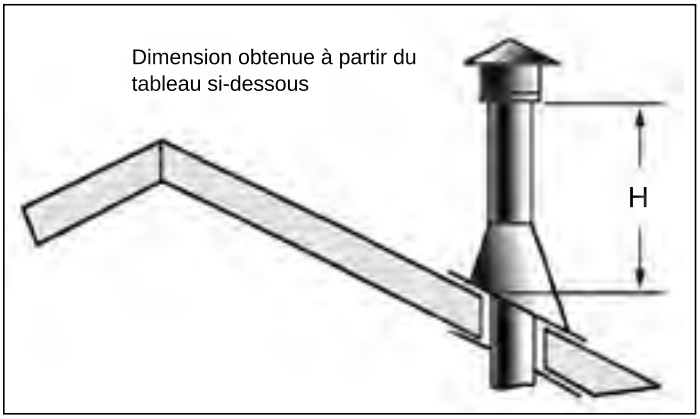

Figure 43: Height of Vertical Termination; Reference Table 10.

Table 10: Minimum 'H' for Figure 43.

Roof Pitch	Minimum Height (H)	
	Feet	Meters
Flat to 7/12	1	0.3
Over 7/12 to 8/12	1.5	0.46
Over 8/12 to 9/12	2	0.61
Over 9/12 to 10/12	2.5	0.76
Over 10/12 to 11/12	3.25	0.99
Over 11/12 to 12/12	4	1.22
Over 12/12 to 14/12	5	1.52
Over 14/12 to 16/12	6	1.83
Over 16/12 to 18/12	7	2.13
Over 18/12 to 20/12	7.5	2.29
Over 20/12 to 21/12	8	2.44

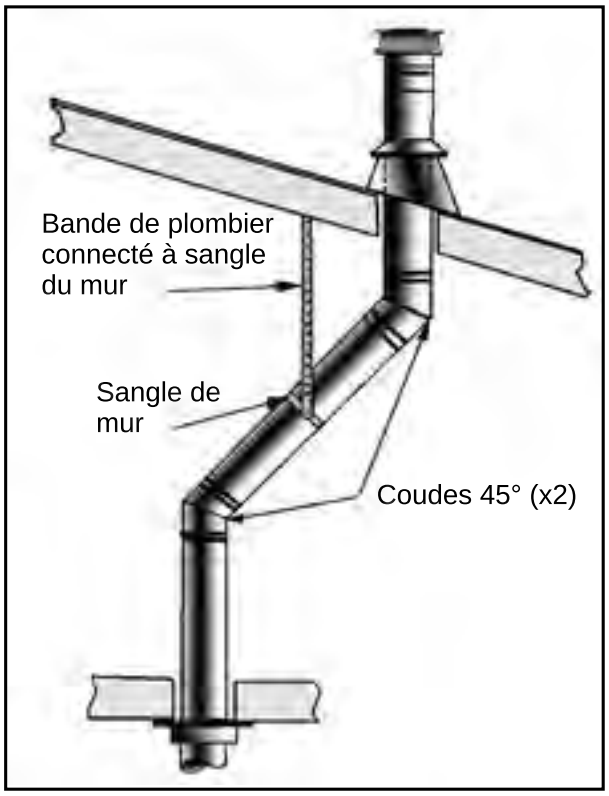

Figure 44: Use of Wall Straps.

closets and storage spaces, which the vertical vent passes through, must be enclosed. The enclosure may be framed and sheet-rocked with standard building materials. However consult the appliance manufactures installation instructions for the minimum allowable clearance between the outside of the vent pipe, and the combustible surfaces of the enclosure. Do not fill any required air spaces with insulation.

NOTES:

(1) If an offset is necessary in the attic to avoid obstructions, it is important to support the vent pipe every 3 feet (914 mm), to avoid excessive stress on the elbows, and possible separation. Wall straps are available for this purpose (see Figure 44).

(2) When ever possible, use 45° degree elbows instead of 90° degree elbows. The 45° degree elbow offers less restriction to the flow of flue gases and intake air.

(3) For multi story installations; a ceiling firestop is required at the second floor, and any subsequent floors (see Figure 45). The opening should be framed to 10″ (254 mm) x 10″ (254 mm) inside dimensions, in the same manner as shown in Figure 31.

(4) Any occupied areas above the first floor, including

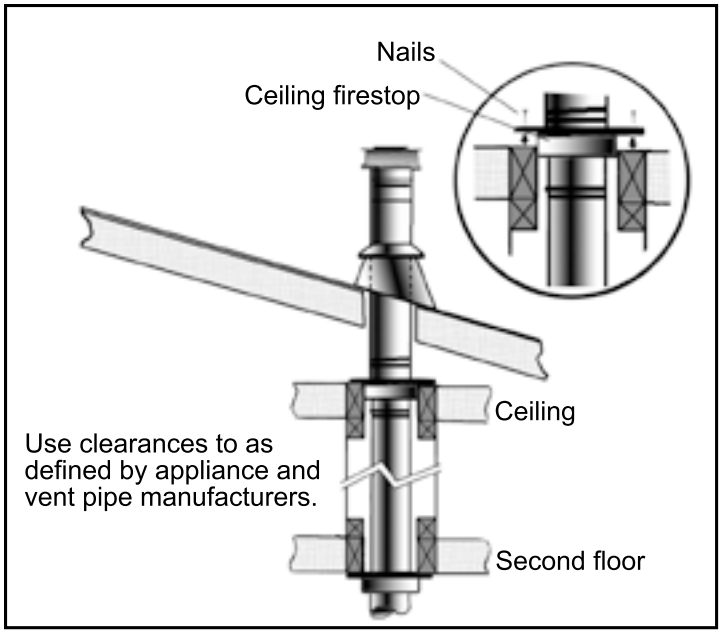

Figure 45: Multi-Story Vent Pipe Installation.

QUALIFIED INSTALLERS ONLY

SOLID FUEL FIREPLACE INSTALLATION:

Table 11: Min. Fireplace Dimensions

	Width	Height	Depth
Insert Dimensions	20¼" (51.4 cm)	27½" (69.8 cm)	14½" (36.8 cm)

Note: Space must be left for gas line on left side of unit for servicing purposes

The base, sidewalls and top structure of the solid fuel firebox cannot be altered with the exception of: removal of dampers, removal of smoke shelf or baffle, removal of ember catches, removal of log grate, removal of viewing screen/curtain, and removal of doors. THE ORIGINAL FIREPLACE MAY NEVER BE RETURNED TO SOLID FUEL USE IN THIS CONDITION.

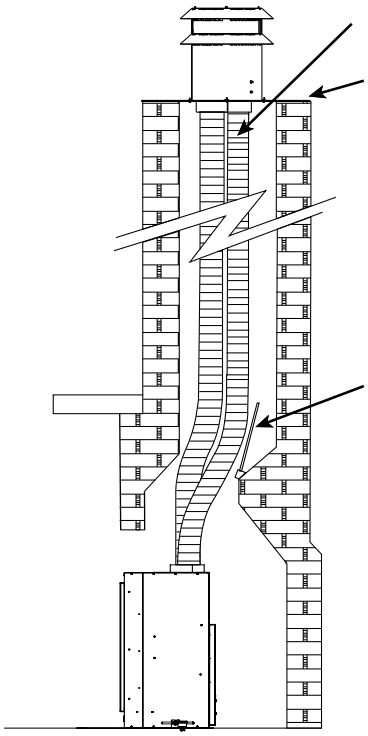

The total vent length must be between 8 ft (2.44 m) and 40 ft (12.19 m).

Install a sealed vent cap to prevent leakage of room air up through chimney.

The intake and the exhaust are 3" (76mm).

Measure the height of the chimney beforehand and purchase the appropriate venting. Never attempt to over-stretch a flexible liner to accommodate the height of the chimney. Every joint in the venting must be secured with three (3) #8 x 3/8" HWH sheet metal screws and an appropriate sealant (either silicone or stove cement).

The flue damper can be fully blocked open or removed for installation of the unit; the smoke shelves, shields and baffles may be removed if attached by mechanical fasteners.

The fireplace and fireplace chimney must be clean, in good working order and constructed of non-combustible materials.

Make sure that all chimney cleanouts are tight fitting and will not permit air to leak into the chimney.

Refractory, glass doors, screen rails, screen mesh and log grates can be removed from the fireplace before installing the unit.

Figure 46: Solid Fuel Fireplace Installation.

IMPORTANT: If the factory-built fireplace has no gas access hole(s) provided, an access hole of 1.5 inch (37.5 mm) or less may be drilled through the lower sides or bottom of the firebox in a proper workmanship like manner. This access hole must be plugged with non-combustible insulation after the gas supply line has been installed. Cutting any sheet-metal parts of the fireplace, in which the gas fireplace insert is to be installed is prohibited. The label plate shown on the right, included with co-linear venting adapter kit, must be permanently attached inside the cavity of the fireplace in a visible location.

WARNING: This fireplace has been converted for the use with a gas fireplace insert only and cannot be used for burning wood or solid fuels unless all original parts have been replaced, and the fireplace re-approved by the authority having jurisdiction.

C-11168

Figure 47: Fireplace Altered Plate.

*Q1L is compatible with ICC 3ft-5ft Horizontal Co-linear Vent Kit. Part# **TM-ALH**

Initial Installation

QUALIFIED INSTALLERS ONLY

Gas Line Connection and Testing:

WARNING: Only persons licensed to work with gas piping may make the necessary gas connections to this appliance.

GAS LINE CONNECTION

- This stove is equipped with a certified pipe located on the left side of the unit terminating in a 3/8" male NPT fitting. Consult your local authorities codes or the CAN/CGA B 149 (1 or 2) installation code in Canada, or in the USA gas installations follow either local codes or the current edition of the National Fuel Gas Code ANSI Z223.1.
- The efficiency rating of this appliance is a product thermal efficiency rating determined under continuous operating conditions and was determined independently of any installed system.

The appliance and its shutoff valves must be disconnected from the gas supply piping system during any pressure testing where the pressure exceeds ½ PSIG (3.45 KPa) or damage will occur to the valve.

The appliance must be isolated from the gas supply piping system by closing its individual manual shutoff valve during any pressure testing of the gas supply piping system at test pressures equal to or less than ½ psig (3.45 KPa).

Always check for gas leaks with a soap and water solution after completing the required pressure test.

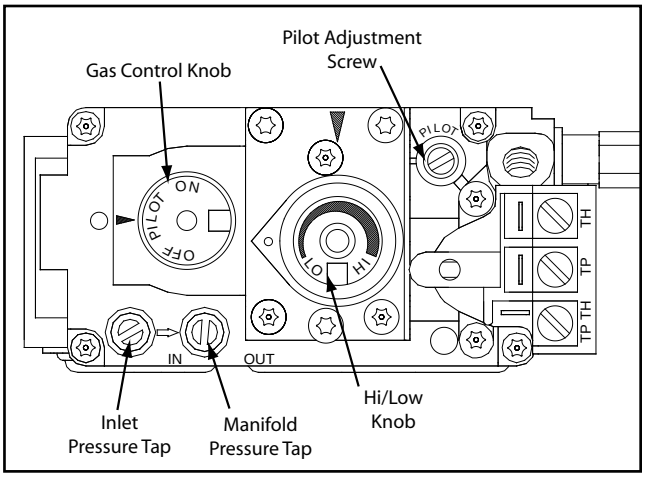

Figure 48: Fully Labeled Gas Valve.

TO TEST VALVE PRESSURES

The pressure taps are located on the top right of the valve shown in Figure 48.

- Turn set screw 1 turn counter clockwise to loosen,
- Place 5/16" (8 mm) I.D. hose over pressure tap system.
- Check pressures using a manometer.
- When finished, release pressure, remove hose & tighten set screw.

Table 12: Pressure and BTU Information.

	Natural Gas	Propane
Main Orifice	#46 DMS	1.2 mm
Manifold Pressure	3.5" W.C. (0.87 KPa)	10.0" W.C. (2.49 KPa)
Min. Manifold Pressure	1.6" W.C. (0.40 KPa)	6.4" W.C. (1.59 KPa)
Max Supply Pressure	7.0" W.C. (1.74 KPa)	11.0" W.C. (2.74 KPa)
Min. Supply Pressure	4.5" W.C. (1.12 KPa)	10.4" W.C. (2.59 KPa)
Max BTU/hr Input	20,000 BTU/hr (5.86 KW)	18,500 BTU/hr (8.42 KW)
Min. BTU/hr Input	13,600 BTU/hr (3.98 KW)	14,500 BTU/hr (4.25 KW)

NEVER USE AN OPEN FLAME FOR LEAK TESTING.

QUALIFIED INSTALLERS ONLY

Electrical Requirements:

The fan will not operate if the appliance is cold. Once the unit is lit and the fan is set to the desired level, the fan will automatically turn on upon reaching operating temperature. The fan will automatically turn off after the appliance has cooled down.

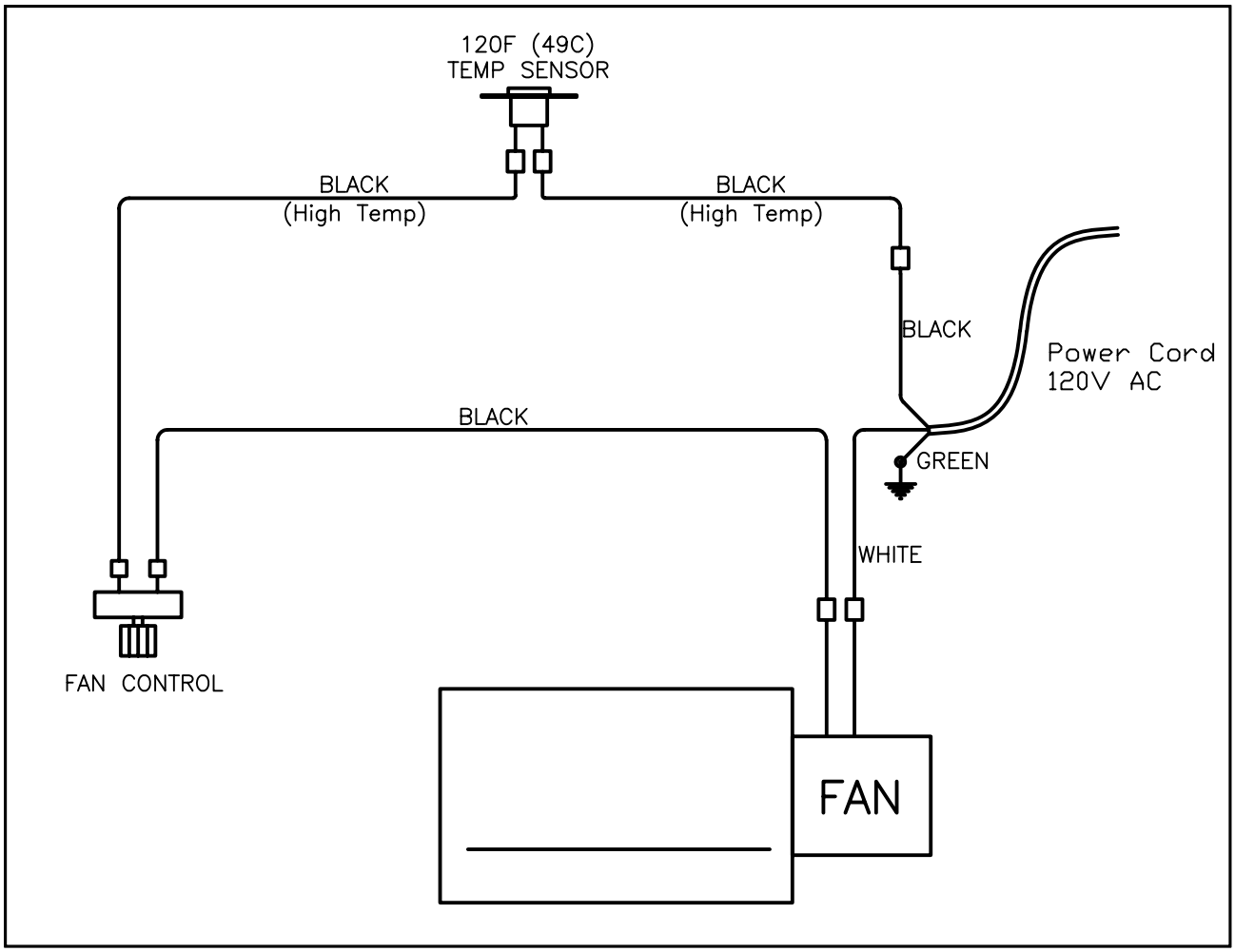

Figure 49: Fan wiring diagram.

The fireplace must be electrically connected and grounded in accordance with local codes or, in the absence of local codes, with the current CSA C22.1 Canadian Electrical Code Part 1, Safety Standards For Electrical Installations, or The National Electrical Code ANSI / NFPA 70 in the US.

WARNING: The electrical grounding instructions must be followed. The fan kit is equipped with a three-prong (grounding) plug for your protection against shock hazard, and should be plugged directly into a properly grounded three-prong outlet. DO NOT cut or remove the grounding prong from this plug.

CAUTION: When servicing controls, label all wires prior to disconnection. Wiring errors can cause improper and dangerous operation. Verify proper operation after servicing.
If any of the original wire as supplied with the appliance must be replaced, it must be replaced with 18 AWG wire with a temperature rating of 105°C

Secondary Installation

Fire Grate and Log Set Installation:

The placement of the logs is not arbitrary. If they are positioned incorrectly, the flames can be "pinched" and will not burn correctly. All of the logs come with either a notch or ledge, which make alignment easier. Using the pictures provided, carefully set the logs in place (see Figures 50 through 56).

NOTE: The logs are fragile and should be handled gently.

Figure 50: This is how the firebox looks with only the burner, air diffuser, log grate and brick panels in place. The log grate can be easily removed by simply lifting up off the locating screws.



Figure 50. Empty firebox with grate and locator pins.

Step 1: Place the back log on the top legde of the air duffuser with back up against the rear brick panel. Install the ember bed assembly into the firebox as shown, making sure the ember bed is up against the front lip of the firebox air diffuser (Figure 51)



Figure 51. Back Log and Ember Bed Installation.



Step 2: Fill in the bottom of the firebox using the coal nuggets supplied with the unit as shown in Figure 52.

Figure 52. Coal Nuggets Installation.

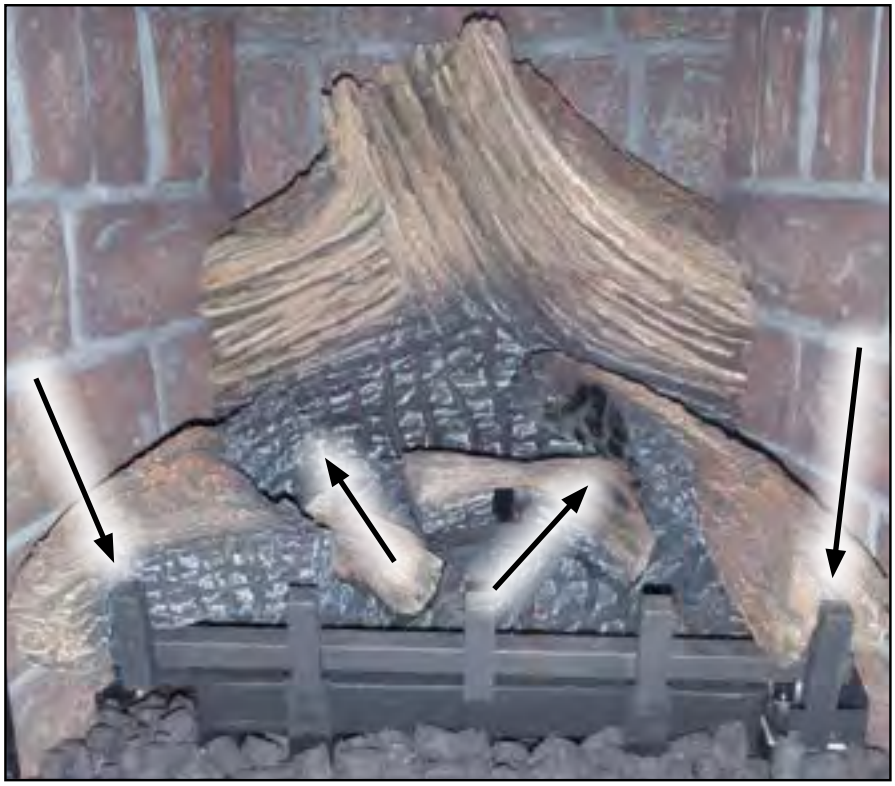

Figure 53. Third Stage Log Set Installation.

Step 3: Install the big y shaped twig on the far left side by locating the bottom of it on the far left log grate upright. The twig should run parallel with the side of the firebox and the top will rest on the top of the ember bed. Then install the big, slightly curved twig on the far right side by locating the bottom of it on the far right log grate upright. The top will rest on the smooth section of the middle ember bed twig.

Step 4: Next, install the second small twig between the two right side log grate uprights by locating the notch on the bottom side with with cross bar of the log grate. Then install the medium sized straight twig between the center and right side log grate upright by locating the notch on the bottom side with the log grate cross bar. The top of the twig will rest on the middle ember bed twig



Figure 54. Fourth Stage Log Set Installation.



Figure 55. Complete log set-up with embers.

Step 5: Finally, install the large straight twig between the center and left side log grate upright by locating the notch on the bottom side with the log grate cross bar. The top of the twig will rest on top of the far right curved twig. The last remaining straight twig gets intalled by locating the front in the crook of the far left y shaped twig and the back notch rests on the top edge of the ember bed.

Figure 56: The Q1L burning with a good flame.

NOTE: While the glass is still removed, it is recommended that the gas line be purged by lighting the pilot.

When lighting the fireplace for the first time since the log set and embers have been installed/replaced, watch for ignition at ALL the burner ports. If a long delay is noticed, turn the appliance off and wait for it to cool down. Then remove the glass and make sure none of the burner ports are blocked.



Figure 56. Q1L complete log set-up with coal nuggets burning.

Maintenance: Once a year, the logs should be removed and checked for deterioration or large amounts of soot. A small amount on the bottom side of the logs is normal. Remove and replace the logs in the same manner described above.

If new coal nuggets or logs are required, contact your nearest ENVIRO dealer.

Never operate the fireplace with the glass door removed.

Secondary Installation

Optional Porcelain Panels (50-2939) Installation and Removal:

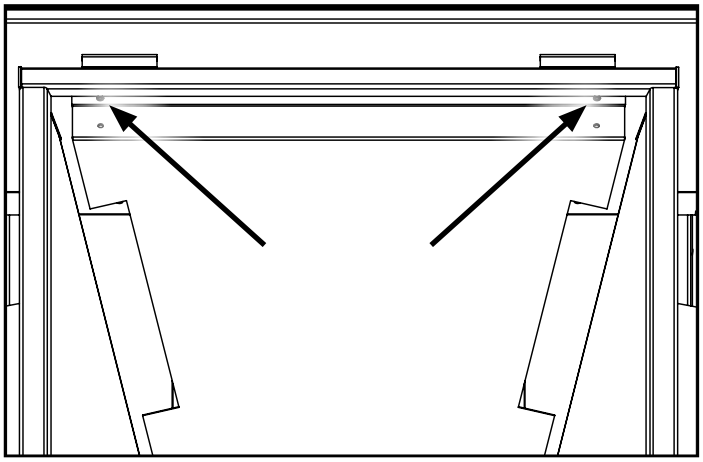

Figure 57. Baffle Screws.

Turn off the gas control knob and allow the unit to cool.

Please ensure that your porcelain panels have not been damaged.

To Install Panels:

1. Remove the glass door by following the instruction in the "Maintenance and Service - Glass Door Removal" section and remove the log set, log grate and air diffuser as outlined in the previous section.
2. Remove the firebox baffle by unscrewing the two screws indicated in Figure 57 using a T20 screwdriver. Lower the front of the baffle down and then lift it out of the two locating screws at the rear of the firebox.
3. Next, remove the top brick panel retainers on each side as shown in Figure 58 using a T20 screwdriver.
4. Carefully remove the left, rear, and right brick panels from the firebox.
5. Install the rear porcelain panel first by sitting it on the ledge at the rear of the firebox (see figure 59), then follow with the left and right panels.
6. Re-install the brick panel retainer screws and brackets.
7. Re-install the firebox baffle.
8. Install the top porcelain panel by screwing it to the firebox baffle as show in Figure 60 using the supplied screws.
9. Re-install the air diffuser, log grate and log set as outlined in the previous section.
10. Re-Install the glass door

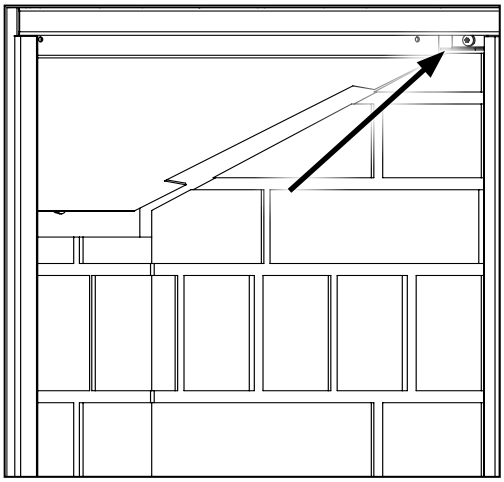

Figure 58. Top Panel Retainers.

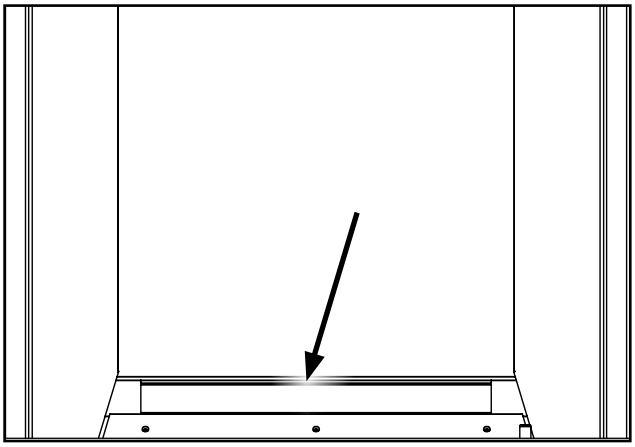

Figure 59. Rear Panel Ledge.

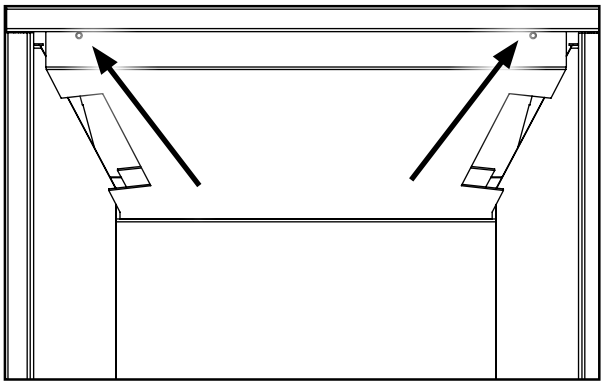

Figure 60. Top Panel Screws.

Safety Screen Installation:

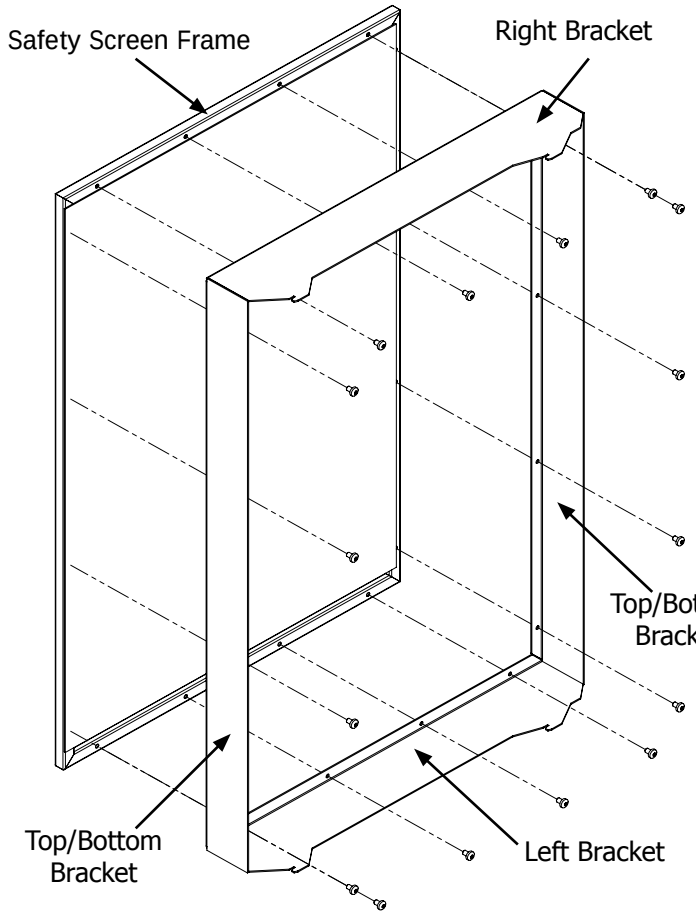

Figure 61: Installing Safety Screen Mounts.

The safety screen supplied with the unit comes assembled. When installed, the screen should not extrude out any farther than the surround panel. If it proturudes past the surround panel then the Surround Mounts will need to be moved. See your surround panel's instruction sheet for more information.

Safety Screen Assembly

If your screen has been damaged, a new screen can be ordered and replaced as shown below.

1. Attach the left, right, top/bottom brackets onto the safety screen using a T20 screwdriver and the supplied sixteen (16) #8 T20 screws (see Figure 61). Do not over-tighten the screws, doing so could cause them to strip out of the screen frame.
2. Lift the face upright in front of the fireplace with the four (4) hooks pointing towards the fireplace. Slide the hooks into the corresponding brackets on each side of the cabinet (see Figure 63). Ensure the hooks are secure before releasing the safety screen.

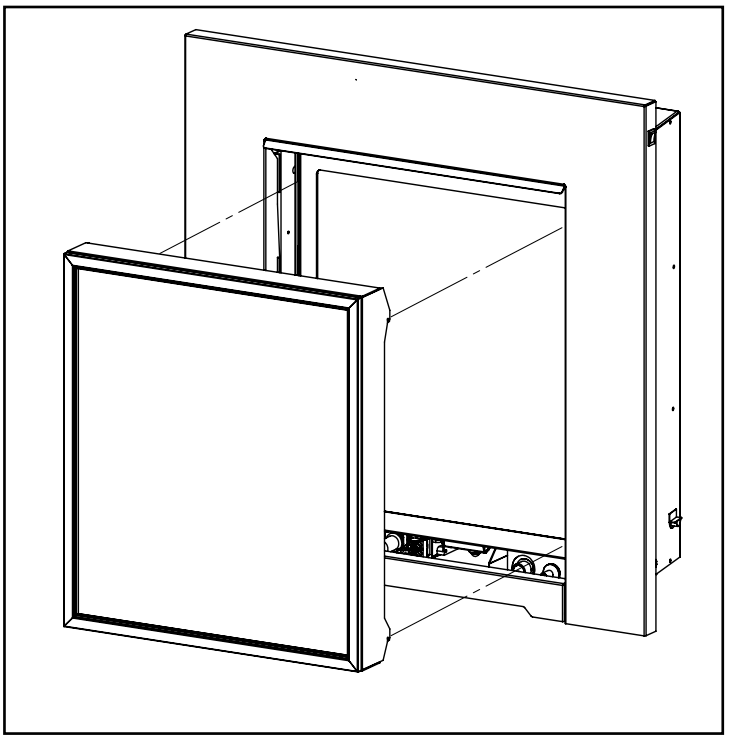

Figure 62: Installing Safety Screen onto Brackets.

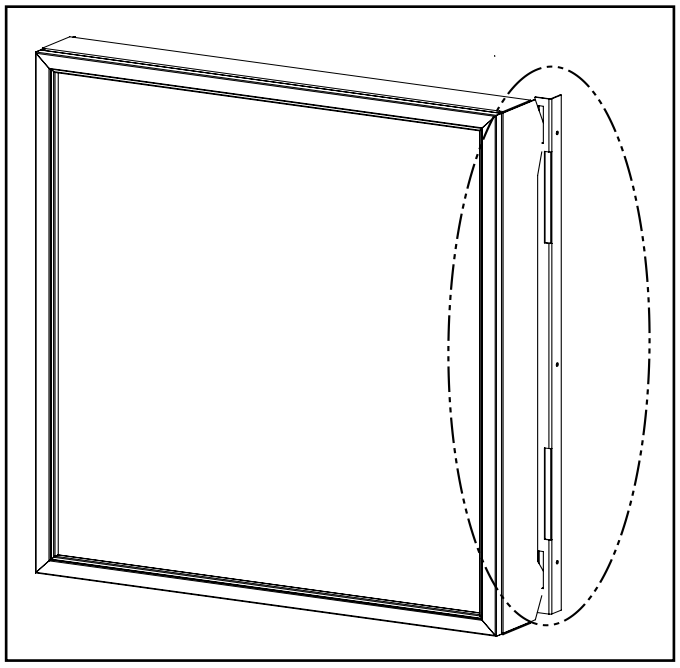

Figure 63: Installing Safety Screen onto Cabinet Bracket (Parts removed for clarity)

Trouble Shooting

Problem	Possible Cause	Solution
The main burner does not ignite when called for.	The gas valve may not be on.	• Check that the gas control knob is in the "ON" position.
	Thermostat is not calling for heat.	• Adjust the thermostat several degrees above ambient temperature.
	Problem with gas valve.	• Use a DC voltmeter to measure the voltage across the TPTH and TP terminals. Main operator voltage: Open circuit ≥ 325mV Closed circuit ≥ 100mV • If voltage is not present, check the control circuit for proper operation. • If proper control system voltage is present, replace the gas control.
Spark will not light the pilot after repeatedly pressing the spark ignitor.	Defective piezo ignitor.	• Check connections to ignitor. • If ignitor connections are good but no spark, replace ignitor.
	Broken spark electrode.	• Check for broken ceramic insulation, replace electrode if broken.
	Misaligned spark electrode.	• If spark is not arcing from electrode to pilot, loosen the screws on the pilot base adjust and tighten.
Pilot will not remain lit.	Problem with thermocouple circuit.	• Check for proper connection of the thermocouple to the rear of the valve. If loose, fully tighten. • Check pilot for full flame impingement around thermocouple. If flame is too small, check gas pressure, adjust pilot rate screw, check pilot head for damage. • Check thermocouple voltage at valve. It must be greater than 5 mV. If low, replace thermocouple.
	Air in gas line (pilot dies while knob is depressed).	• Bleed line. • Check gas line pressure. • Contact dealer.
Burners will not remain lit.	Problem with thermopile circuit.	• Check gas line pressure . • Check for flame impingement on thermopile. If low, see "Pilot will not remain lit". • Check thermopile for minimum of 300 mV when burner is switched on. • Check wiring to thermostat for breaks.
Flame lifting	Leak in vent pipe	• Check for leaks in vent connections.
	Improper vent configuration	• Check vent configuration with manual.
	Terminal may be recirculating flue gases	• Check to see if terminal is on correctly. • May need to install high wind termination cap. • Contact dealer.
Glass fogs up	Normal Condition: after the appliance warms up the glass will clear. **Due to additives in gas, glass may get hazy during operation** Clean as needed.	
Blue Flames	Normal during start up: flames will yellow as the fireplace heats up.	
Flames are burning "dirty" or sooting	Flame impingement	• Check log positioning. • Increase primary air by opening the venturi shutter and/ or by opening the vent restrictor. See also "Burners will not remain lit."
Remote control doesn't work	Problem with the remote	• One or more of the batteries are dead. See remote control instructions.
	Problem with fireplace	• The on/off switch is turned to OFF. • The gas control valve is turned to PILOT or OFF. • The pilot has gone out.

Parts List

Reference Number	Part Description	Part Number
1	Door Release Tool	50-2510
2	Door Latch Mechanism w/ Spring (set of 2)	50-1285
3	Firebox Air Restrictors (set of 2)	50-2988
4	Log Burner Pilot Shield	50-2991
5	120 Ceramic Fan Temperature Sensor	EC-001
6	Convection Fan only	50-2493
7	FPI Fan Controller (69.5V) 115V W/FS Knob	EC-039A
8	Fan Controller Knob W/Decal	EC-040
9	S.I.T. Piezo Ignitor	EC-023
10	FPI Burner Switch	EC-026
11	Control Panel w/ Decal	50-2989
12	S.I.T. Pilot Assembly - Standing Pilot	EC-015
-	Pilot Assembly Gasket	EC-021
13	S.I.T. Nova Valve - Convertible	50-1421
14	Heyco Strain Relief	EC-044
15	Domestic Power Cord (115v)	EC-042
16	Log Set	50-2935
17	Tube Burner	50-2992
18	Log Grate	50-2997
19	Door Glass w/ Gasket (19.75 x 17.5in)	50-2998
20	Door Complete	50-2990
21	Porcelain Liners Set (4 pieces)	50-2939
22	Ceramic Brick Liner Set (3 pieces)	50-2938
-	Ceramic Ledgstone Liner Set (3 pieces)	50-2972
-	Fireplace Floor Pad 12” x 20”	50-3016
23	Co-Linear Vent Kit	50-2982
24	Q1L Owners Manual	50-2999
25	Q1 Replacement Safety Screen	50-3052
-	Q1 Conversion Kit - LP to NG (Nova)	50-2993
-	Q1 Conversion Kit - NG to LP (Nova)	50-2983
-	3ft-5ft Horizontal Co-linear Vent Kit	50-3664
-	12 oz. Can of Matallic Black Touch Up Paint	PAINT-12-MB

Parts Diagram

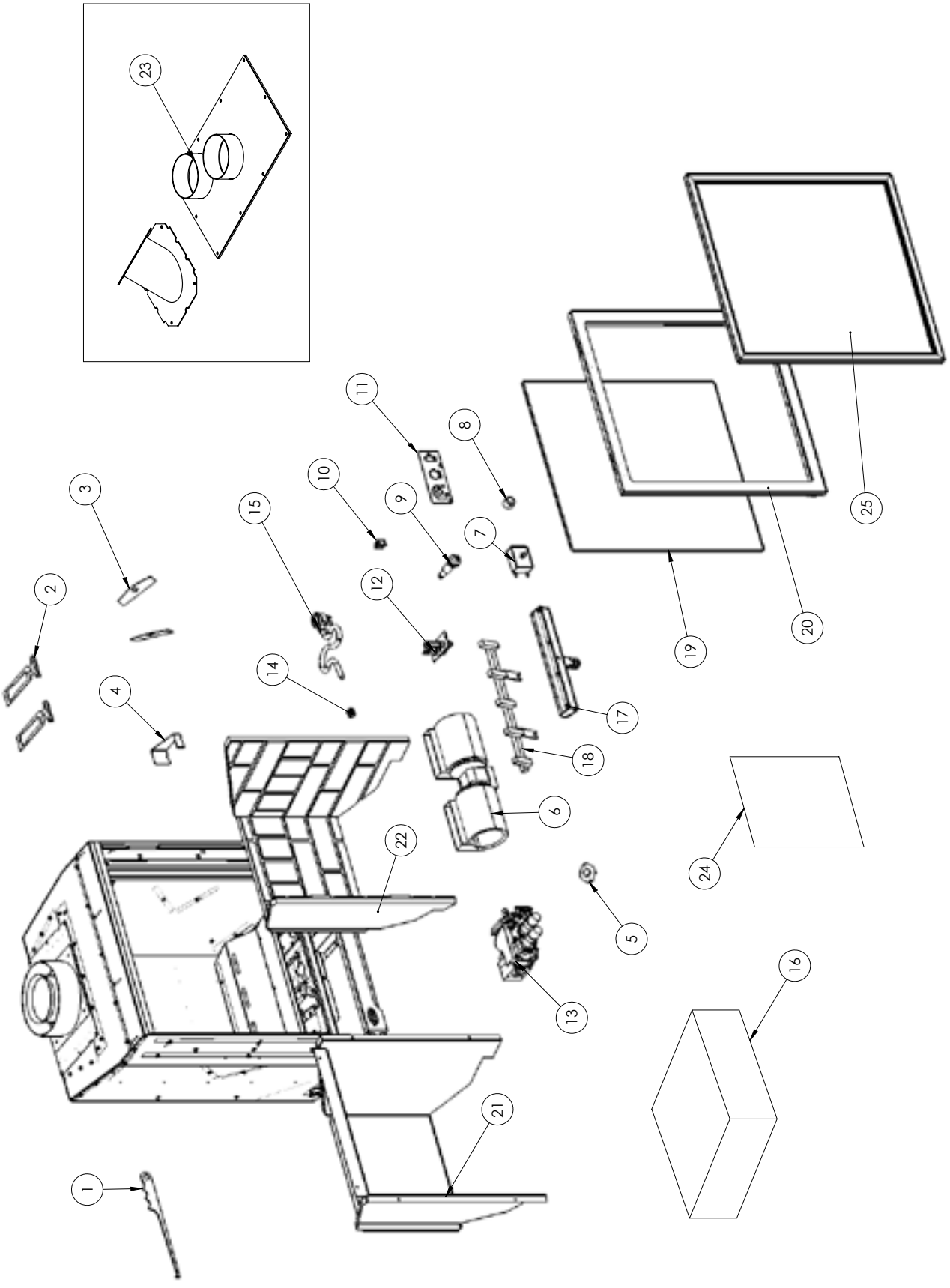

Warranty for Enviro **Gas** Products

Sherwood Industries Ltd. (“Sherwood”) hereby warrants, subject to the terms and conditions herein set forth, this product against defects in material and workmanship during the specified warranty period starting from the date of original purchase at retail. In the event of a defect of material or workmanship during the specified warranty period, Sherwood reserves the right to make repairs or to assess the replacement of a defective product at Sherwood’s factory. The shipping costs are to be paid by the consumer. All warranties by Sherwood are set forth herein and no claim shall be made against Sherwood on any oral warranty or representation.

Conditions

- A completed warranty registration must be submitted to Sherwood within 90 days of original purchase via the online warranty registration page or via the mail-in warranty registration card provided. Have the installer fill in the installation data sheet in the back of the manual for warranty and future reference.
- This warranty applies only to the original owner in the original location from date of install.
- The unit must have been properly installed by a qualified technician or installer, and must meet all local and national building code requirements.
- The warranty does not cover removal and re-installation costs.
- Sherwood Industries Ltd. reserves the right to make changes without notice.
- Sherwood Industries Ltd. and its employees or representatives will not assume any damages, either directly or indirectly caused by improper usage, operation, installation, servicing or maintenance of this appliance.
- A proof of original purchase must be provided by you or the dealer including serial number.
- This warranty does not cover any discoloration of the safety screen mesh.

Exclusions

An expanded list of exclusions is available at www.enviro.com/help/warranty.html

This warranty does not cover:

- Damage as a result of improper usage or abuse.
- Damage caused from over-firing due to incorrect setup or tampering.
- Damage caused by incorrect installation.

To the Dealer

- Provide name, address and telephone number of purchaser and date of purchase.
- Provide date of purchase. Name of installer and dealer. Serial number of the appliance. Nature of complaint, defects or malfunction, description and part # of any parts replaced.
- Pictures or return of damaged or defective product may be required.

To the Distributor

- Sign and verify that work and information are correct.

Sherwood Industries Ltd.
6782 Oldfield Road, Victoria, BC . Canada V8M 2A3
Online warranty registration: www.enviro.com/warranty/

Category	One Year	Two Year	Limited Lifetime (7yr)
Parts [1,2] (unit serial number required)		✔	
Firebox Liner Panels [3]		✔	
Firebox			✔
Heat Exchanger			✔
Burner			✔
Ceramic Logs [4]			✔
Ceramic Glass [5]	✔		
Pedestal / Legs (excluding finish)			✔
Door Assembly			✔
Surround Panels (excluding finish)			✔
Exterior Panels (excluding finish)			Up to 5 years
Electrical Components		✔	
Exterior Surface Finishing	✔		
Labour	✔		

[1] Whereas warranty has expired, replacement parts will be warrantied for 90 days from part purchase date. Labour not included. Unit serial number required.

[2] 50-173 Westport Fan Kit covered for up to 5 years from purchase date. Labour not included. Unit serial required.

[3] Excluding damage to the finish caused by improper setup of the appliance, or color changes.

[4] Log set and panels excludes wear and tear or breakage caused by cleaning or service.

[4] Glass is covered for thermal breakage. Photos of box, inside of door, and unit serial # must be supplied for breakage due to shipping.

[6] Exterior Surface finishing covers plating, enamel or paint and excludes colour changes, chipping, and fingerprints.

Travel costs not included.

Jan 2018

Installation Data Sheet

The following information must be recorded by the installer for warranty purposes and future reference.

NAME OF OWNER:

_____

ADDRESS:

_____

_____

_____

PHONE:_____

NAME OF DEALER:

_____

ADDRESS:

_____

_____

_____

PHONE:_____

MODEL:_____

SERIAL NUMBER:_____

DATE OF PURCHASE: _____ (dd/mm/yyyy)

DATE OF INSTALLATION:_____(dd/mm/yyyy)

☐ NATURAL GAS (NAT) ☐ PROPANE(LPG)

INLET GAS PRESSURE:_____in wc

MAIN BURNER ORIFICE:_____# DMS

PILOT ORIFICE #_____OR_____in diam.

INSTALLER'S SIGNATURE:

_____

NAME OF INSTALLER:

_____

ADDRESS:

_____

_____

_____

PHONE:_____

MANUFACTURED BY:
SHERWOOD INDUSTRIES LTD.
6782 OLDFIELD RD. SAANICHTON, BC, CANADA V8M 2A3
www.enviro.com
July 2019
C-15344