WARRANTY REGISTRATION
enviro.com/warranty

G39G

DIRECT VENT FIREPLACE - NOVA

OWNER'S MANUAL



WARNING: If the information in this manual is not followed exactly, a fire or explosion may result causing property damage, personal injury or loss of life. Installation and service must be performed by a qualified installer, service agency or the gas supplier.

C ETL LISTED US
Intertek
C#4001609

CERTIFIED TO/CERTIFIÉ AUX : ANSI Z21.88
: CSA 2.33
: CSA 2.17

Fr Version Française: www.enviro.com/fr.html

50-3624

Safety Precautions

WARNING:

FIRE OR EXPLOSION HAZARD

Failure to follow safety warnings exactly could result in serious injury, death, or property damage.

- Do not store or use gasoline or other flammable vapours and liquids in the vicinity of this or any other appliance.

- WHAT TO DO IF YOU SMELL GAS

- **Do not try to light any appliance.**
- **Do not touch any electrical switch; do not use any phone in your building.**
- **Leave the building immediately.**
- **Immediately call your gas supplier from a neighbor's phone. Follow the gas supplier's instructions.**
- **If you cannot reach your gas supplier, call the fire department.**

- Installation and service must be performed by a qualified installer, service agency or the gas supplier.

INSTALLER:
Leave this manual with the appliance.

CONSUMER:
Retain this manual for future reference.

This appliance may be installed in an after-market permanently located, manufactured (mobile) home, where not prohibited by local codes.

This appliance is only for use with the type of gas indicated on the rating plate. This appliance is not convertible for use with other gases, unless a certified kit is used.

Only doors certified with the appliance shall be used

Massachusetts installations (Warning): This product must be installed by a licensed plumber or gas fitter when installed within the Commonwealth of Massachusetts. Other Massachusetts code requirements: Flexible connector must not be longer than 36in., a shut off valve must be installed; only direct vent sealed combustion products are approved for bedrooms/bathrooms. A carbon monoxide detector is required in all rooms containing gas fired direct vent appliances. The fireplace damper must be removed or welded in the open position prior to installation of a fireplace insert.

Safety Precautions

FOR SAFE INSTALLATION AND OPERATION OF YOUR "ENVIRO" HEATER, PLEASE CAREFULLY READ THE FOLLOWING INFORMATION:

• All ENVIRO gas-fired appliances must be installed in accordance with their instructions. Carefully read all the instructions in this manual first. Consult the building authority having jurisdiction to determine the need for a permit prior to commencing the installation.

• **NOTE:** Failure to follow these instructions could cause a malfunction of the fireplace, which could result in death, serious bodily injury, and/or property damage.

• Failure to follow these instructions may also void your fire insurance and/or warranty.

GENERAL

• Installation and repair should be done by a qualified service person. The appliance should be inspected before the first use and, at least, annually by a qualified service person. More frequent cleaning may be required due to excessive lint from carpeting, bedding material, etc. It is imperative the control compartments, burners and circulating air passageways of the appliance be kept clean.

• Due to high temperatures, the appliance should be located out of high traffic areas and away from furniture and draperies.

Children and adults should be alerted to the hazards of high surface temperatures and should stay away to avoid burn or clothing ignition.

• Young children should be carefully supervised when in the same room as the appliance. Toddlers, young children and others may be susceptible to accidental contact burns. A physical barrier is required if there is a risk for individuals in the house. To restrict access to a fireplace or stove install an adjustable safety gate to keep toddlers, young children and other at risk individuals out of the room and away from hot surfaces. Any safety screen, guard, or barrier removed for servicing an appliance must be replaced prior to operating the appliance.

• Clothing or other flammable materials should not be placed on or near the appliance.

DANGER



HOT GLASS WILL CAUSE BURNS

DO NOT TOUCH GLASS UNTIL COOLED.

NEVER ALLOW CHILDREN TO TOUCH GLASS.

A barrier designed to reduce the risk of burns from the hot viewing glass is provided with this appliance and shall be installed for the protection of children and other at-risk individuals.

• A barrier designed to reduce the risk of burns from the hot viewing glass is provided with this appliance and shall be installed for the protection of children and other at-risk individuals. If the barrier becomes damaged, the barrier shall be replaced with the manufacturer's barrier for this appliance.

FOR YOUR SAFETY

• Installation and service must be performed by a qualified installer, service agency or gas supplier.

• This installation must conform to local codes or, in the absence of local codes, with the National Fuel Gas Code, ANSI Z223.1/NFPA 54, or the Natural Gas and Propane Installation Code, CSA B149.1.

• To prevent injury, do not allow anyone who is unfamiliar with the stove to operate it.

• To prevent injury, if the pilot or pilot and burners have gone out on their own, open the glass door and wait 5 minutes to air out before attempting to re-light the stove.

• Always keep the area around these appliances clear of combustible material, gasoline and other flammable liquids and vapours.

• These appliances should not be used as a drying rack for clothing or for hanging Christmas stockings/decorations.

• Due to the paint curing on the stove, a faint odor and slight smoking will likely be noticed when the stove is first used. Open a window until the smoking stops.

Always connect this gas stove to a vent system and vent to the outside of the building envelope. Never vent to another room or inside the building. Make sure the specified vent pipe is used, properly sized and of adequate height to provide sufficient draft. Inspect the venting system annually for blockage and signs of deterioration.

WARNING: Failure to position the parts in accordance with the diagrams in this booklet, or failure to use only parts specifically approved with this appliance, may result in property damage or personal injury.

WARNING: Do not operate with the glass front removed, cracked or broken. Replacement of the glass should be done by a licensed or qualified service person.

• Never use solid fuels such as wood, paper, cardboard, coal, or any flammable liquids, etc., in this appliance.

• Do not use this appliance if any part has been under water. Immediately call a qualified service technician to inspect the appliance and to replace any part of the control system or any gas control which has been under water.

• Do not abuse the glass by striking it or slamming the door shut.

• If the G39 unit is pulled out of its installation, and the vent-air intake system is disconnected for any reason, ensure that the vent-air intake pipes are reconnected and re-sealed in accordance to the instructions noted in Initial Installation - Direct Vent

Table of Contents

Safety Precautions 2
Table of Contents 4
Codes And Approvals 5
Specifications 6
Dimensions: 6
Rating Label & Lighting Instructions Location: 6
Operating Instructions 7
Lighting and Instructions: 7
Pilot Light: 8
Burner Lighting: 8
Blower Speed: 9
Normal Sounds During Operation: 9
Air Shutter (Venturi): 9
Maintenance And Service 10
Routine Maintenance: 10
Cleaning The Glass: 10
Cleaning The Firebox: 10
Replacing The Glass: 10
Cleaning Decorative Surfaces: 11
Surround Panel Removal: 11
Door Cover Removal: 12
Glass Door Removal: 12
Media Tray Removal: 13
Burner Removal: 13
Fuel Conversion: 14
Initial Installation 16
Introduction: 16
Unit Install Preparation: 16
Placement and Framing: 18
Finishing a Fireplace: 19
Cool Surface Activation: 20
Cool Surface Install Options: 22
Flat Wall Installation: 25
Recess Installation: 26
Corner Installation: 27
Floor Protection: 28
Mantel Requirements: 28
Minimum Venting Requirements: 29
Flex Venting: 30
Clearances & Non-Combustible : 31
TV Installation Considerations: 32
Direct Vent: 33
Vent Termination Restrictions: 34
Venting Clearances: 34
Approved Venting Parts: 35
Allowable Co-Axial Vent Configurations: 36
Exhaust Restrictor Setting: 38
Horizontal Termination: 39
Vertical Termination: 40
Gas Line Connection and Testing: 42
Electrical Requirements: 43
Wall Switch or Thermostat: 43
Convection Fan Wiring: 44
Glass Media Installation: 44
Trouble Shooting 45
Parts List 46
Parts Diagram 47
Warranty 49

Codes And Approvals

DIRECT VENT ONLY: This type is identified by the suffix DV. This appliance draws all of its air for combustion from outside the dwelling, through a specially designed vent pipe system.

This appliance has been tested and approved for installations from 0 feet to 4500 feet (1372 m) above sea level.

In the USA: The appliance may be installed at higher altitudes. Please refer to your American Gas Association guidelines which state: the sea level rated input of Gas Designed Appliances installed at elevations above 2000 (610 m) feet is to be reduced 4% for each 1000 feet (305 m) above sea level. Refer also to local authorities or codes which have jurisdiction in your area regarding the de-rate guidelines.

In Canada: When the appliance is installed at elevations above 4500 feet (1372 m), the certified high altitude rating shall be reduced at the rate of 4% for each additional 1000 feet (305 m).

- This appliance has been tested by INTERTEK and found to comply with the established VENTED GAS FIREPLACE HEATER standards in CANADA and the USA as follows:

VENTED GAS FIREPLACE HEATER (G39; NATURAL GAS, PROPANE GAS)

TESTED TO: ANSI Z21.88 / CSA 2.33 VENTED GAS FIREPLACE HEATERS

CAN/CGA 2.17 GAS FIRED APPLIANCES FOR HIGH ALTITUDES

This ENVIRO G39 Fireplace:

- Has been certified for use with either natural gas or propane (see rating label).
- Is not for use with solid fuels.
- Is approved for a bedroom or bed sitting room. (**IN CANADA**: must be installed with a listed wall thermostat. **IN USA**: see current ANSI Z223.1 for installation instructions.)
- Must be installed in accordance with local codes. If none exist, use current installation code CAN/CGA B149.1 in Canada or ANSI Z223.1/NFPA 54 in the USA.
- Must be properly connected to an approved venting system and not connected to a chimney flue serving a separate solid-fuel burning appliance.

IMPORTANT NOTICE (Regarding first fire up): When the unit is turned on for the first time, it should be turned onto high without the fan on (if equipped) for the first 4 hours. This will cure the paint, glass, gasket material and other products used in the manufacturing process. It is advisable to open a window or door, as the unit will start to smoke and can irritate some people. After the unit has gone through the first burn, turn the unit off including the pilot, let the unit get cold then remove the glass door and clean it with a good gas fireplace glass cleaner, available at your local ENVIRO dealer.

NATIONAL FIREPLACE INSTITUTE®

NFI

CERTIFIED

www.nficertified.org

We recommend that our gas hearth products be installed and serviced by professionals who are certified in the U.S. by the National Fireplace Institute® (NFI) as NFI Gas Specialists.

G39 DIMENSIONS:

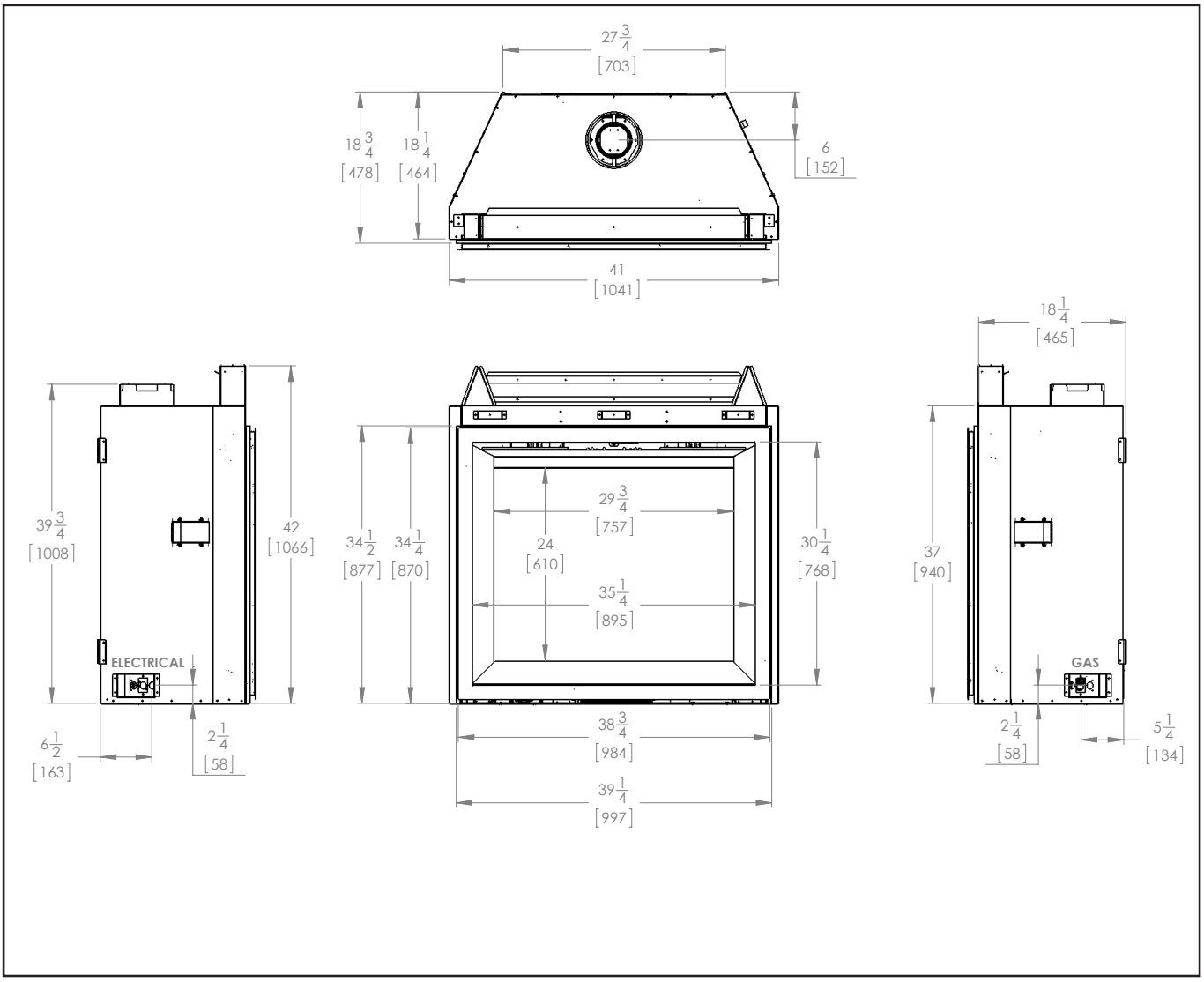

Figure 1. G39 Dimensions

RATING LABEL & LIGHTING INSTRUCTIONS LOCATION:

Remove the surround completely to access the rating label and lighting instructions. The sheet is attached to a length of chain and are never to be tampered with or removed. All important information for your fireplace is on this label as well as the model specific serial number which you will need for warranty information. The sheet is located inside the cabinet under the gas valve.

Operating Instructions

For Your Safety, Read Safety Precautions And Lighting Instructions Before Operating

WARNING: IF YOU DO NOT FOLLOW THESE INSTRUCTIONS EXACTLY A FIRE OR EXPLOSION MAY RESULT, CAUSING PROPERTY DAMAGE, PERSONAL INJURY OF LOSS OF LIFE.

Lighting and Instructions:

FOR YOUR SAFETY READ BEFORE LIGHTING

WARNING:If you do not follow these instructions exactly, a fire or explosion may result causing property damage, personal injury or loss of life

A. This appliance has a pilot which must be lighted by hand. When lighting the pilot, follow these instructions exactly.

B. BEFORE LIGHTING smell all around the appliance area for gas. Be sure to smell next to the floor because some gas is heavier than air and will settle on the floor.

WHAT TO DO IF YOU SMELL GAS:

Do not try to light any appliance. Do not touch any electrical switch; do not use any phone in your building. Immediately call your gas supplier from a neighbor's phone. Follow the gas supplier's instructions. If you cannot reach your gas supplier, call the fire department.

C. Use only your hand to push in or turn the gas control knob. Never use tools. If the knob will not push in or turn by hand, don't try to repair it. Call a qualified service technician. Force or attempted repair may result in a fire or explosion.

D. Do not use this appliance if any part has been under water. Immediately call a qualified service technician to inspect the appliance and to replace any part of the control system and any gas control which has been under water.

LIGHTING INSTRUCTIONS

1. STOP! Read the safety information above on this label.
2. Set the thermostat to the lowest setting.
3. This appliance is equipped with an on-demand pilot that shuts off after 7 consecutive days of main burner inactivity.
4. Turn off all electric power to this appliance.
5. Open the front control panel for valve knob access.
6. Turn off the gas control knob clockwise ↷ to the "OFF" position.

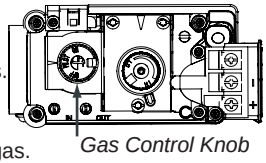

7. Open door. Wait flve (5) minutes to clear out any gas. Close door. Then smell for gas, including near the floor. If you smell gas, STOP! Follow "B" in the safety information above on this label. If you don't smell gas, go to the next step.

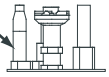

8. Find pilot - located close to the burner(s). Turn the gas control knob counter-clockwise ↶ to "PILOT". Push the gas control in fully and hold, keep knob depressed for about 60 seconds after the pilot is lit or until an audible *"BEEP"* is heard. Release knob. If pilot goes out, repeat steps 4 through 5. **WARNING**: This gas valve has a lockout device, which will not allow the pilot burner to be relit until the thermocouple has cooled.
-If the knob does not pop up when released, stop and immediately call your service technician or gas supplier.
-If the pilot will not stay lit after several tries, turn the gas control knob clockwise ↷ to "OFF" and call your service technician or gas supplier.
9. Turn the gas control knob counter clockwise ↶ to the "ON" position. Flip the burner switch to "ON" then turn the "HI/LOW" knob to the desired setting.
10. Close the front control panel.
11. Turn on all electric power to the appliance.
12. Set thermostat to desired setting.

TO TURN OFF GAS TO APPLIANCE

1. Set the thermostat to the lowest setting.
2. Turn off all electric power to the appliance if service is to be performed.
3. Open the front control panel and flip burner switch to "OFF"
4. Turn the gas control knob clockwise ↷ to the "OFF" position.
5. Close the front control panel.

C-16294

Figure 2. Lighting Instruction Label

Operating Instructions

For Your Safety, Read Safety Precautions And Lighting Instructions Before Operating

Pilot Light:

1. Turn off the gas to the fireplace. I**f not recently done, remove the glass and let the unit air out for at least five (5) minutes to clear out any gas.** Turn on gas to the fireplace.

2. Turn the gas control knob to pilot, push in and hold (see Figure 4); Simultaneously, press the piezo ignitor several times until the pilot ignites. Hold the gas control knob in for at least 30 seconds once lit. Check that the pilot has fully engulfed the thermocouple assembly (see Figure 3). The pilot should now stay lit on its own, release gas control knob.

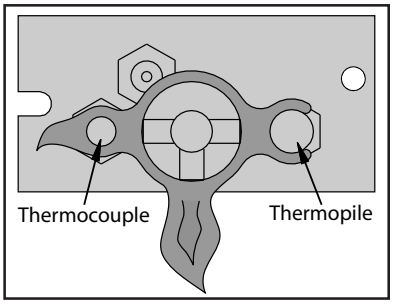

Figure 3. Pilot Flame

Note: This stove must be wired with an external burner switch or thermostat for safety and convenience.

Note: This appliance is equipped with an on-demand pilot that, if left dormant, will shut down after 7 consecutive days.

Burner Lighting:

1. Make sure pilot is lit, if not light it (see above).
2. Turn gas control knob counter-clockwise to ON; if already ON, see next.
3. Flip burner switch to ON.
4. Turn HI/LO control knob to the desired flame height.
5. Check that all burner holes are lit.

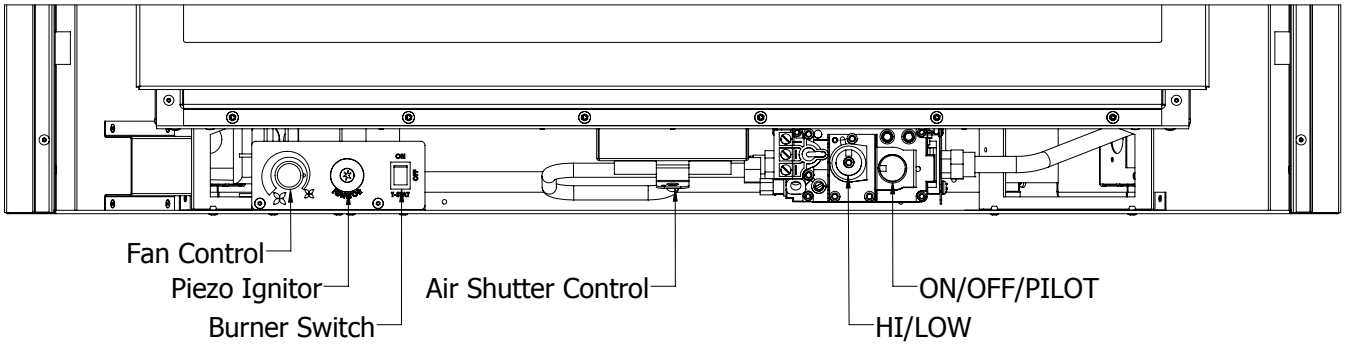

Figure 4. Burner Controls

TO TURN GAS FIREPLACE OFF:

Flip switch to OFF to turn off burners, turn the gas control knob to OFF to extinguish the pilot flame. Keep the pilot flame **OFF** when not in use for long periods. If the fireplace is to be serviced, turn the gas shut off valve OFF (DO NOT FORCE IT) and disconnect all electrical power sources. See Figure 4 for control panel layout.

NOTE: When the unit is turned on for the first time, it should be turned onto high, with the fan OFF for the first two to four hours. This will cure the paint, glass, gasket material, and other products used in the manufacturing process. It is advised that a door or window be opened as the unit will start to smoke, which can irritate some people. After the unit has gone through the first burn, turn the unit OFF, including the pilot, and let the unit get completely cold. Then remove the glass and clean it with a good gas fireplace glass cleaner, available at your local Enviro dealer (See Maintenance And Service - Glass Door Removal and Maintenance And Service - Cleaning The Glass).

Operating Instructions

For Your Safety, Read Safety Precautions And Lighting Instructions Before Operating

Blower speed:

Convection fan operation is optional, it will come on only when the fireplace is up to temperature (approximately 15 minutes). The speed of the fan can be changed by turning the fan control knob. The blower will continue to operate automatically after the unit has been shut off (approximately 25 minutes).To turn the blower off, turn the knob counter-clockwise until it "clicks" off (Figure 5).
It is advisable not to operate the blower below 1/3 speed as it puts a strain on the windings of the blower which could also cause premature fan failure.

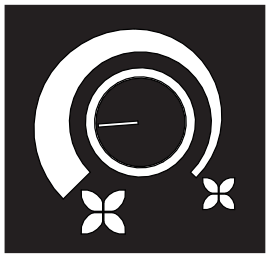

Figure 5. Fan Control

Normal Sounds During Operation:

Table 1: Normal Sounds

Component	Normal Sound Description
Main Unit	Creaking when heating up or cooling down
Burner	Light pop or poof when turned on or off
Temperature Sensor	Clinking when it senses to turn the blower on or off
Pilot Flame	Quiet whisper while the pilot flame is on
Blower / Fan	Air movement that increase and decreases with the speed of the blower
Gas Control Valve	Dull click when turning on or off, this is the valve opening and closing

Air Shutter (Venturi):

The air shutter plays a very important role in flame appearence and combustion quality. The shutter adjusts how much air gets mixed with the gas before it ignites; adjustments can be made to accomodate various climates and vent configurations.

Remove surround to access the air shutter. Find the lever underneath the firebox (see Figure 6). Moving the lever inward (closed) will make the flame appear more yellow and tall; moving the lever outward (open) will make the flames appear more blue and short.

Typically natural gas flames will require the shutter to be more closed.

Typically LP flames will require the shutter to be more open.

If you cannot attain a healthy flame by making air shutter adjustments, you may have the incorrect restrictor setting or venting problem.

If the flame is very flickery, fast moving, and low then increase the restriction.

If the flame is very tall, lazy, and dirty then decrease the restriction.

More details can be found in the venting section of this manual.

Caution: Wear heat resistent gloves when making adjustments to the air shutter. Perform adjustments after 15 minutes.

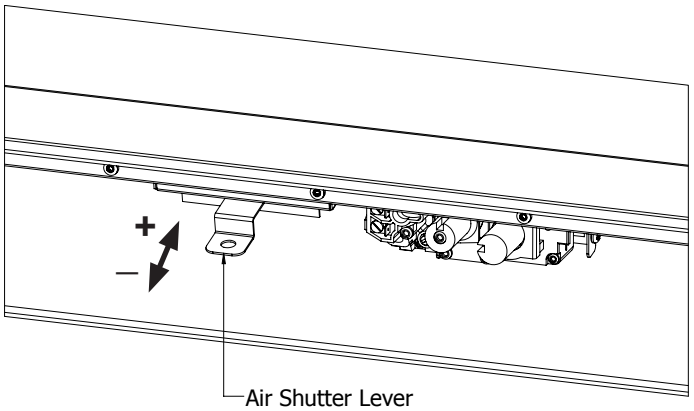

Figure 6. Air Shutter Location

Maintenance And Service

Routine Maintenance:

Run through the following procedures to ensure the system is clean and working properly at least once a year. Check the burner to see if all the ports are clear and clean. Check the pilot to make sure it is not blocked by anything. The pilot flame should be blue with little or no yellow tips.

WARNING: Failure to position parts in accordance with this manual, or failure to use only parts specifically approved with this appliance may result in property damage or personal injury.

The venting system must be periodically examined; it is recommended the examination is done by a qualified agency.

Cleaning The Glass:

With the fireplace cooled, remove the surround panel and glass door (See Maintenance And Service - Surround Panel Removal and Maintenance And Service - Glass Door Removal). Check the gasket material on the back of the glass, making sure that it is attached and intact.

During a cold start up, condensation will sometimes form on the glass. This is a normal condition with all gas fireplaces. This condensation can allow dust and lint to cling to the glass surface which requires periodic cleaning.

Initial paint curing of the appliance can leave a slight film behind the glass, a temporary problem. The glass will need cleaning about two weeks after installation.

Use a mild glass cleaner and a soft cloth. **Abrasive cleaners will damage the glass and painted surfaces.** Depending on the amount of use, the glass should require cleaning no more than two or three times a season.

WARNING: Do not clean the glass when it is hot.

Cleaning The Firebox:

Carefully remove the glass, they are fragile. Gently remove all the media and place on a paper towel. Vacuum the bottom of the firebox thoroughly. Carefully clean any dust off the glass and remove any lint from the burner and pilot. At this time, inspect the burner tube for cracking or severe warping. If a problem is suspected, contact the dealer. Check the glass for deterioration or large amounts of soot; a small amount on the bottom side of the glass is normal. Replace the glass as shown in the Secondary Installation - Log Set Installation section. If new/more media is required, contact your nearest ENVIRO dealer.

Replacing the Glass:

The glass in the fireplace is a high temperature ceramic. If the glass is damaged in any way, a factory replacement is required (see Parts List). Wear gloves when handling damaged glass door assembly to prevent personal injury. Do not operate with the glass front removed, cracked or broken. Removal and replacement of the glass from the door **must** be done by a licensed or qualified service person. **The glass must be purchased from an ENVIRO dealer. No substitute materials are allowed.** To remove the door (see Maintenance And Service - Glass Door Removal). The replacement glass will come with a new gasket installed. Remove any silicone remnants from the door. Apply high temperature around the perimeter of the door and install the new piece of glass with gasket. Apply even pressure to the glass to allow the silicone to adhere to the gasket material.

Cleaning Decorative Surfaces:

Painted and porcelain faces should be wiped with a damp cloth periodically. If a plated face has been purchased, it should be unpackaged carefully to avoid getting anything on the surface of the finish, including cleaners, polish and finger prints. It is important to note that fingerprints and other marks can leave a permanent stain on plated finishes. **To avoid this, give the face a quick wipe with denatured alcohol on a soft cloth BEFORE lighting the fireplace.** Never clean the face when it is hot. Do not use other cleaners as they may leave a residue, which can become permanently etched into the surface.

Surround Panel Removal:

WARNING: Do not attempt to remove the surround panel until the unit has completely cooled.

There are four mounting hooks that hold the surround into position (see Figure 7). To remove the surround, it is easiest to grab with both hands on either side and lift up and bring outward. Upon installation, some adjustment from left to right may be needed to center the surround.

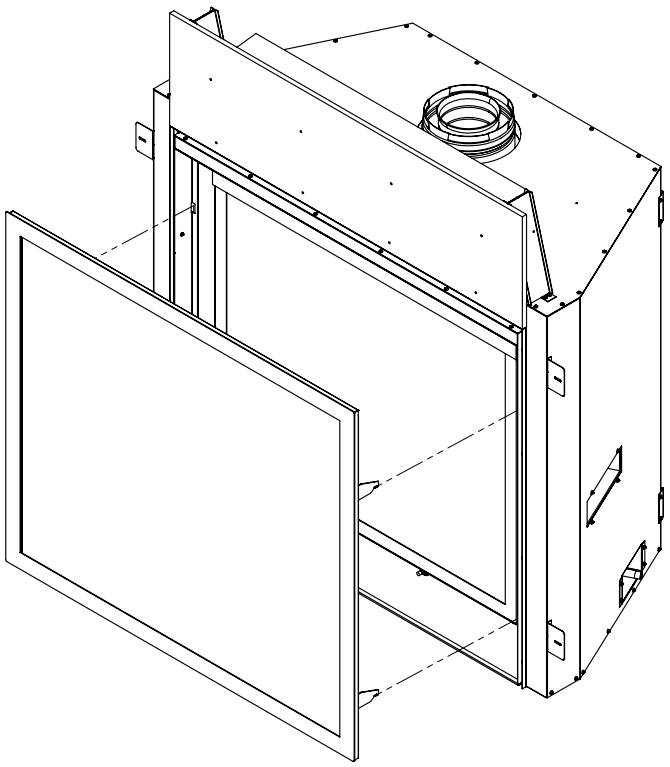

Figure 7. Surround Removal

Door Cover Removal:

To remove the door cover, remove the two (2) wing nuts using your fingers then lift up and outward.

WARNING: Do not touch or attempt to remove the glass door if the fireplace is not completely cold.

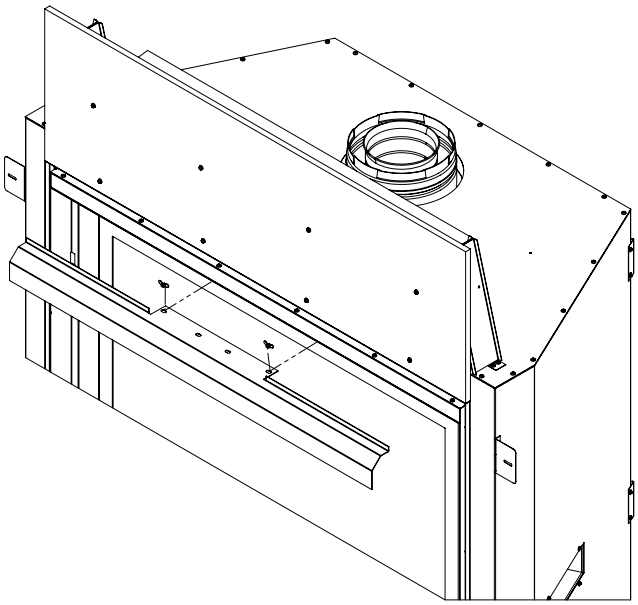

Figure 8. Door Cover Removal

Glass Door Removal:

To remove the glass door use a 3/8 socket to remove the 3 upper bolts ,rotate outward, and lift. To replace the door simply reverse the order; do not over tighten the bolts or they may strip.

WARNING: Do not touch or attempt to remove the glass door if the fireplace is not completely cold.

WARNING: Never operate the fireplace with the glass door removed.

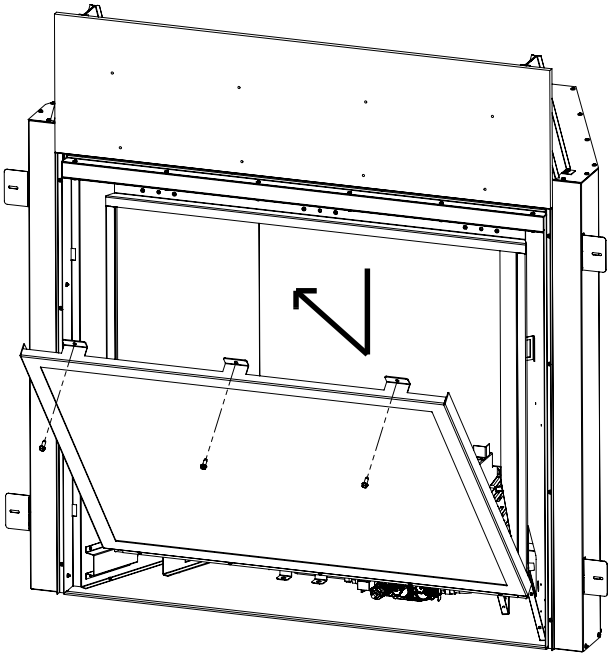

Figure 9. Glass Door Removal

Maintenance And Service

The burners will need to be removed for maintenance and fuel conversion. Follow the procedure carefully.

Proceed only when the unit has completely cooled down.

Media Tray Removal:

1. Remove the surround panel (see Maintenance and Service - Surround Panel Removal).
2. Remove the door cover (see Maintenance and Service - Door Cover Removal).
3. Remove the glass door (see Maintenance and Service - Glass Door Removal)
4. Remove glass media (if installed).
5. Remove the upper tray hat by removing the two (2) upper T-20 screws.
6. Remove the seven (7) remaining T-20 screws securing the glass media tray (see Figure 10). Lift up and out.

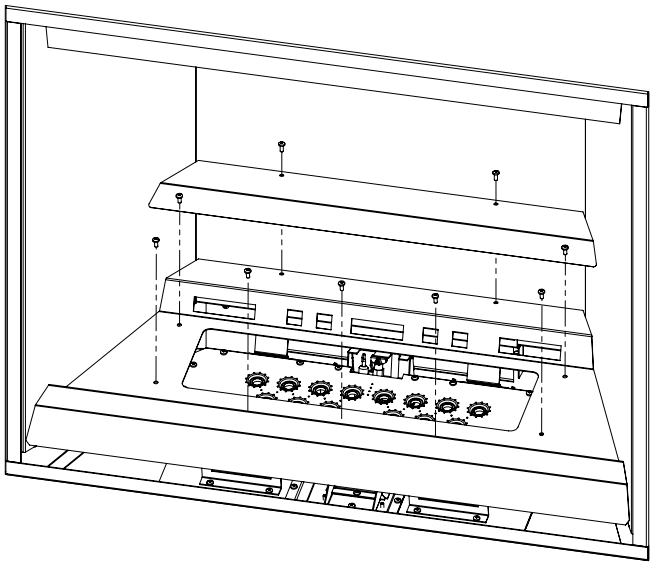

Figure 10. Media Tray Removal

Burner Removal:

1. Remove the glass media tray (see Maintenance and Service - Media Tray Removal).
2. Remove the six (6) appropriate T-20 screws securing the burner. Lift burner up and out. The remaining T-20 screws in the burner do not need to be removed.

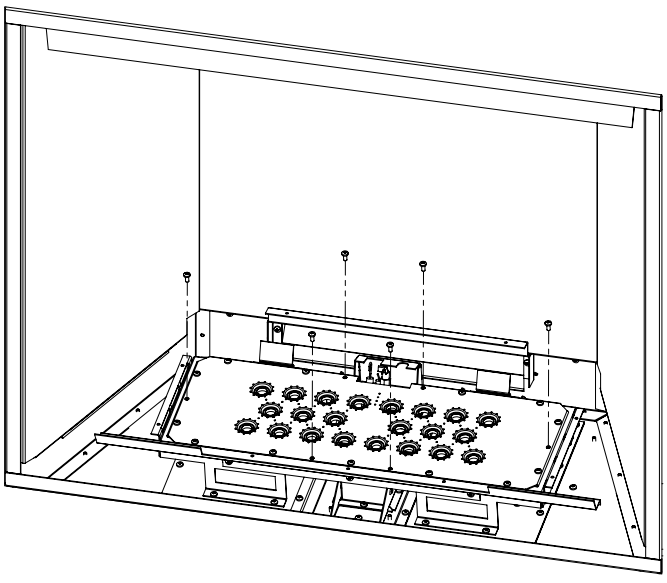

Figure 11. Front Burner Removal

FUEL CONVERSION:

TO BE INSTALLED BY A QUALIFIED SERVICE AGENCY ONLY

Please read and understand these instructions before installing.

Warning: This conversion kit shall be installed by a qualified service agency in accordance with the manufacturer's instructions and all applicable codes and requirements of the authority having jurisdiction. If the information in these instructions is not followed exactly, a fire, explosion or production of carbon monoxide may result causing property damage, personal injury or loss of life. The qualified service agency is responsible for the proper installation of this kit. The installation is not proper or complete until the operation of the converted appliance is checked as specified in the manufacturer's instructions supplied with the kit.

Kit Parts List for G39G Model:

1 - Burner Orifice (LP - DMS #52) as marked
1 - Pilot Orifice (LP)
1 - Installation Instruction Sheet
2 - Conversion Labels

Carefully inspect all parts supplied with this conversion kit. If any parts have been damaged or are missing, contact your dealer, distributor or courier company to have them replaced before starting this installation.

CONVERSION KIT INSTALLATION:

1. **Disconnect the gas supply completely as well as any electrical power source before proceeding.**
2. Remove surround panel, door cover, glass door, media tray, and burner (see MAINTENANCE AND SERVICE section of Owner's Manual).
3. Convert the existing burner orifices with the ones provided in this kit using a 3/8 inch deep socket. **WARNING: BE SURE TO INSTALL THE CORRECT ORIFICE INTO THE CORRECT PORT**



Figure 12: Pilot Orifice

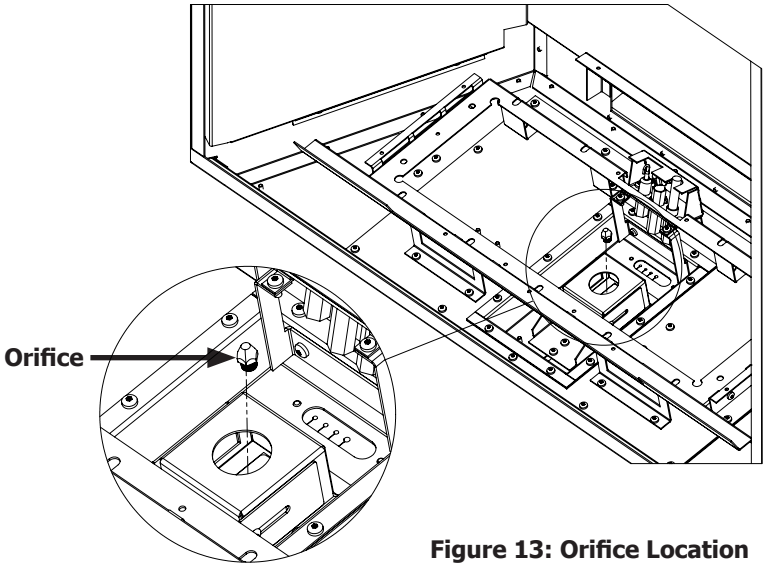

Figure 13: Orifice Location

4. Convert the existing pilot orifice with the one provided in this kit (see Figure 12) using a 7/16 inch wrench. Fully unthread and remove the pilot head and replace the orifice insert.
5. Reassemble pilot head in proper orientation. Be sure not to overtighten pilot, if head does not reach the proper orientation in the snug position then contact your Enviro dealer.

6. Convert the gas valve:

   a) Remove the black protection cap from the HI/LO knob (see Figure 14).
   b) Remove the conversion screw using a 5/32 inch or 4mm Allen key (see Figure 15).
   c) Flip the screw around and reinsert with the red o-ring seal facing outward (see Figure 16).
   d) If converting to NG ensure the red o-ring is not visible (see Figure 17).

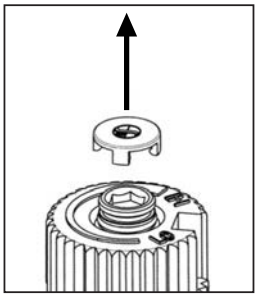

Figure 14: Removing Valve Cap

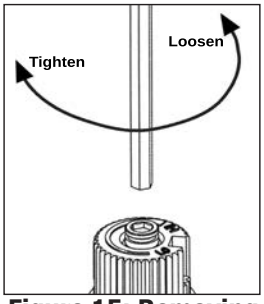

Figure 15: Removing Valve Screw

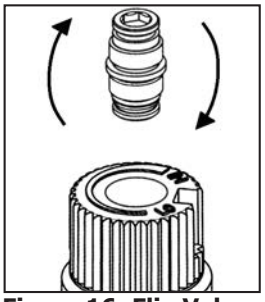

Figure 16: Flip Valve Screw

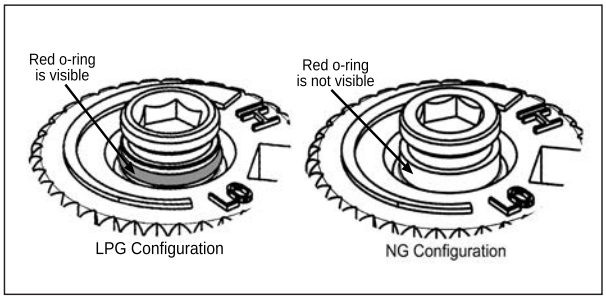

Figure 17: O-ring on Valve Screw

7. Reinstall burner, media tray, glass media, and glass door (see MAINTENANCE AND SERVICE section of Owner's Manual).
8. Purge any air from gas line and reconnect to unit.
9. Use a small brush and apply a warm soapy water solution to all gas connections. If a gas leak is present, bubbling will occur. Gas leaks can be repaired by using a gas approved pipe thread sealant. **WARNING: NEVER USE AN OPEN FLAME WHEN TESTING FOR GAS LEAKS.**
10. Reconnect electrical power to the unit.
11. Light the pilot and recheck for leaks in the aluminum pilot line. If a leak is evident, contact your ENVIRO dealer for a pilot line replacement. **WARNING: DO NOT ATTEMPT TO FIX THIS LINE, IT MUST BE REPLACED IF DAMAGED.** The pilot should properly cover both the thermocouple and thermopile. If adjustment is necessary, turn the adjustment screw in the valve (see Figure 50) clockwise to decrease and counter-clockwise to increase until the correct flame is achieved (see Figure 3).
12. Start the main burner and verify full range of adjustment using the HI/LO knob. Confirm the inlet and manifold gas pressures are within the acceptable range using a manometer (see INITIAL INSTALLATION - GAS LINE CONNECTION AND TESTING). If this unit has been installed at an altitude higher than 2000ft (610m) it is required to de-rate the unit accordingly.

In the USA: The appliance may be installed at higher altitudes. Please refer to your American Gas Association guidelines which state: the sea level rated input of Gas Designed Appliances installed at elevations above 2000 (610 m) feet is to be reduced 4% for each 1000 feet (305 m) above sea level. Refer also to local authorities or codes which have jurisdiction in your area regarding the de-rate guidelines.

In Canada: When the appliance is installed at elevations above 4500 feet (1372 m), the certified high altitude rating shall be reduced at the rate of 4% for each additional 1000 feet (305 m).

13. **MAKE SURE** that the conversion labels provided are installed on or close to the rating label to signify that the unit has been converted to a different fuel type.

Initial Installation

QUALIFIED INSTALLERS ONLY

Introduction:

This section of the owner's manual is for the use of qualified technicians only. There are several installation safety guidelines that must be adhered to; carefully read the safety precautions at the front of this manual.

Unit Install Preparation:

Review the diagram below to familiarize yourself with the parts included with the unit. Please review the following instructions carefully to ensure the unit is prepared properly before installation.

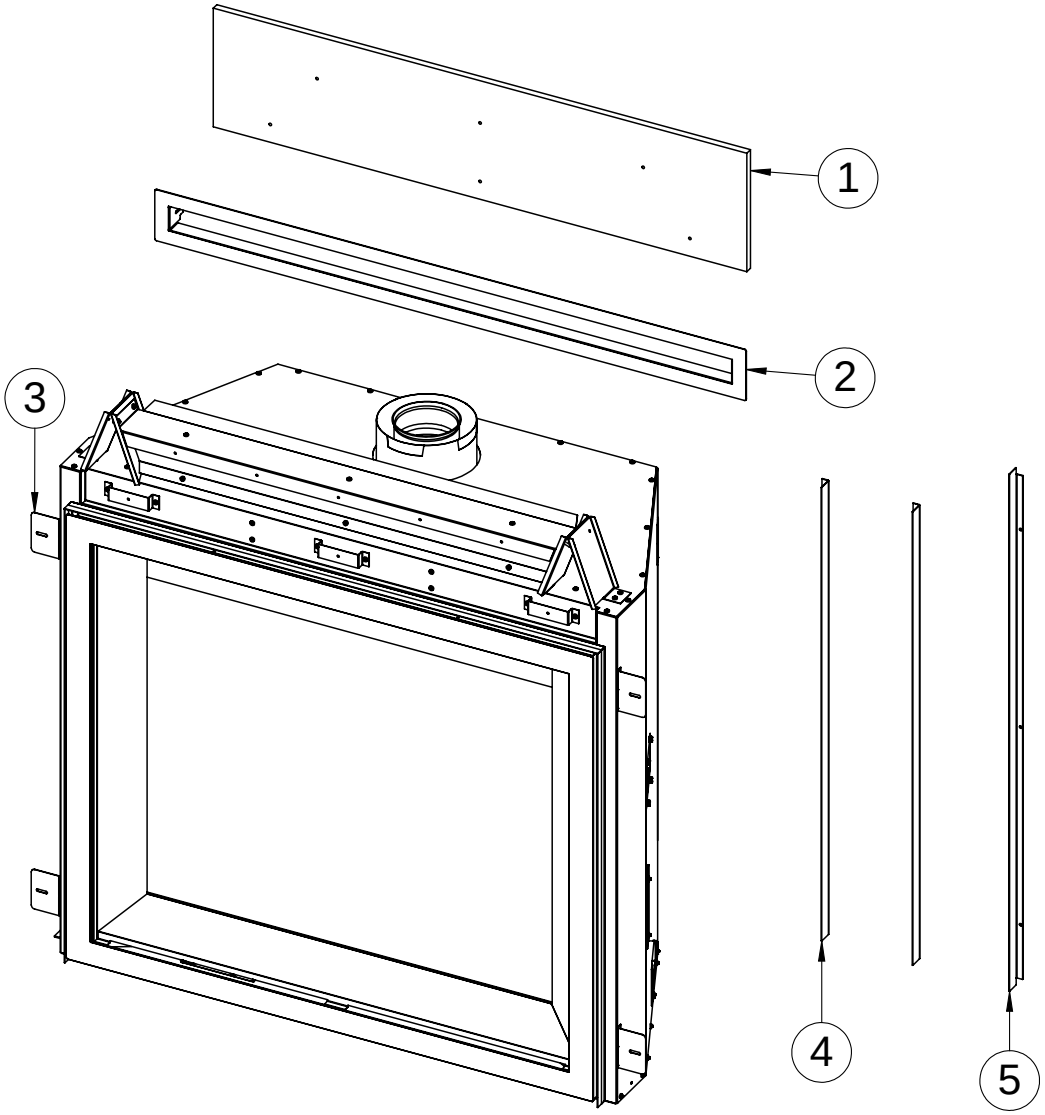

Diagram 1: Additional Parts

Table 2: Additional Parts

Item Number	Item Description	Quantity
1	Non-Combustible Board	1
2	Cool Surface System Bezel	1
3	Stud Anchors	4
4	Extended Finishing Edge Side	2
5	Extended Finishing Edge Top	1

QUALIFIED INSTALLERS ONLY

Nailing Flange:

There are four (4) nailing flanges to secure the unit to the framing, they are assembled flat from the manufacturer. Remove the upper T-20 screw and rotate each nailing flange upward until the bare nailing flange hole lines up and reinstall the T-20 screw. Bend the flange 90 degrees making it flush with the cabinet face.

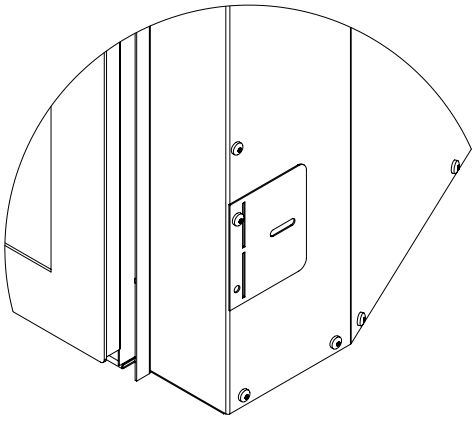

Figure 18: Nailing Flange Flat

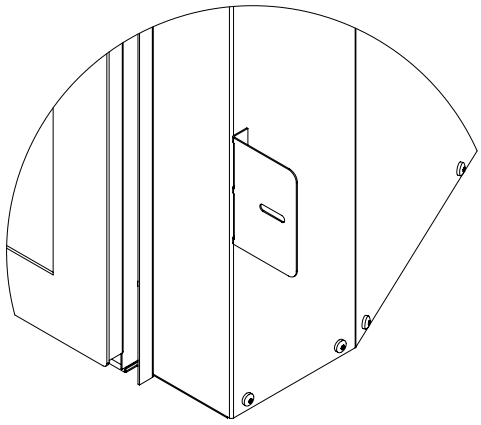

Figure 19: Nailing Flange Assembled

Non-combustible board:

Install the supplied non-combustible facing board with eight (8) supplied 8-32 x.75 fasteners using a 1/4 inch socket. These screws can be found in the manual bag, remove them and install the board. Line up the holes and drill fasteners into the board until the screw head is flush with facing board. **CAUTION: DO NOT DRILL INTO THE BOARD ANY FURTHER OR IT MAY CRACK.** This board is mandatory unless the COOL SURFACE SYSTEM is activated, if it is damaged contact you ENVIRO dealer.

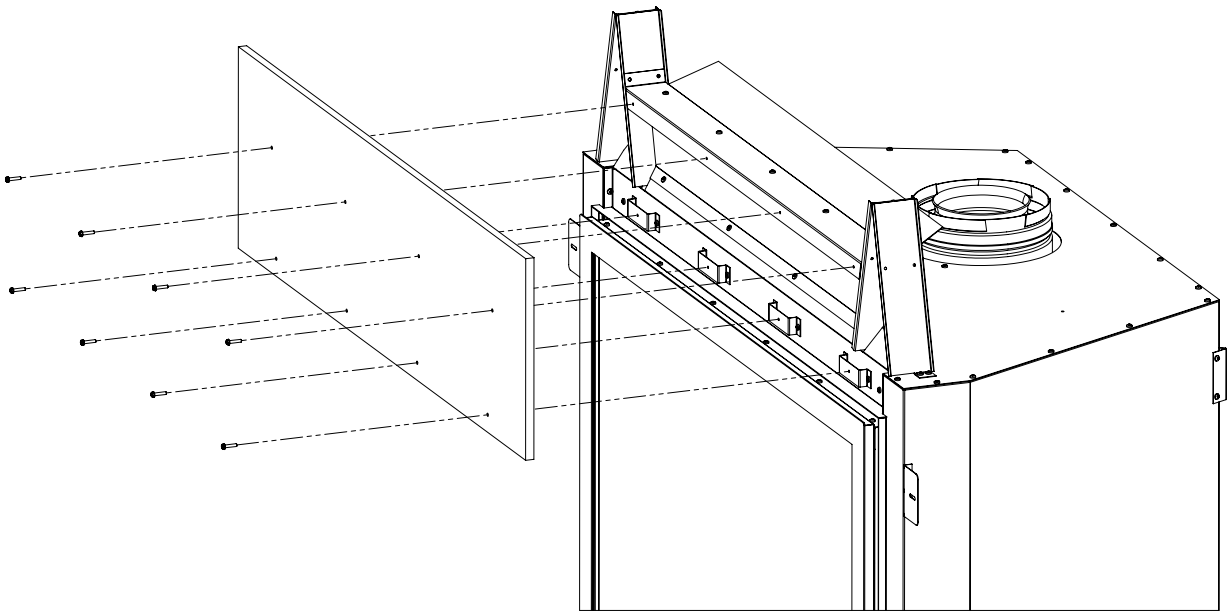

Figure 20: Non-combustible board

QUALIFIED INSTALLERS ONLY

PLACEMENT AND FRAMING:

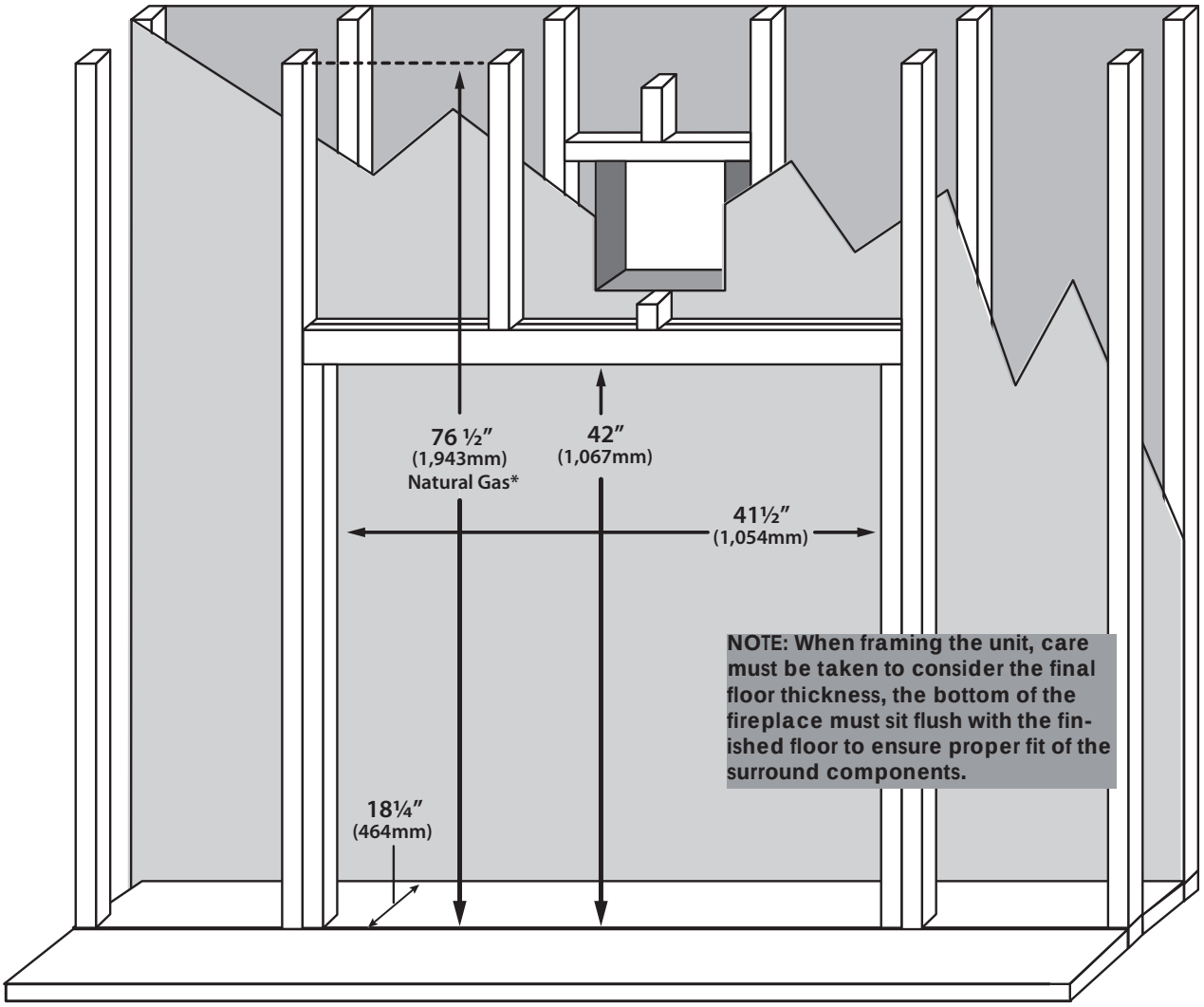

Figure 21: G39 Minimum Framing

Table 3: G39 Minimum Framing

Minimum Framing Dimensions		
Depth	18 1/4"	464mm
Width	41 1/2"	1054mm
Header Height	42"	1067mm
Enclosure Ceiling (Natural Gas)	76 1/2"	1943mm
Enclosure Ceiling (Propane)	82 1/2"	2096mm

***NOTE: Minimum enclosure ceiling height is increased when Fireplace has been converted to propane.**

The location for the fireplace can be raised, at floor level, or installed in a corner. There are minimum framing measurements for each situation. The basic rough opening should have the following dimensions (see Figure 23). The fireplace must be placed on a strong and level surface.

The gas line must be run to the right side of the fireplace, there is a 3/8 NPTM fitting to connect the gas line to. The electrical wiring must be brought to the left side. The location of the fireplace should be chosen so there will be at least a **36 inches (914 mm)** clearance from drapes, doors and other combustible materials.

QUALIFIED INSTALLERS ONLY

FINISHING A FIREPLACE:

There are multiple ways to finish a G39 fireplace. Here is what you need to know to properly install the desired finishing material.

There are three finishing edge options.

1. Outer Finishing Edge (Short) - This finishing edge comes mounted to the unit with screws. This finishing edge is 0.5" deep and will accommodate finishing materials up to 0.875" in thickness. The surround panel will sit on the inside of this finishing edge. This means the finishing edge is offset 0.25" from the surround panel creating a border. This option will not cover the cut edge of the finishing material so it needs to be finished in an aesthetically pleasing way.

2. Outer Finishing Edge (Long) - This finishing edge comes wrapped in foam on top of the unit. This finishing edge is 1" deep and will accommodate finishing materials of 1" or more in thickness. The 0.5" Finishing edge installed on the unit will need to be removed and replaced with this trim. The surround panel will sit on the inside of this finishing edge. This means the finishing edge is offset 0.25" from the surround panel creating a border. This option will not cover the cut edge of the finishing material so it needs to be finished in an aesthetically pleasing way. This is ideal for thicker finishes like stone.

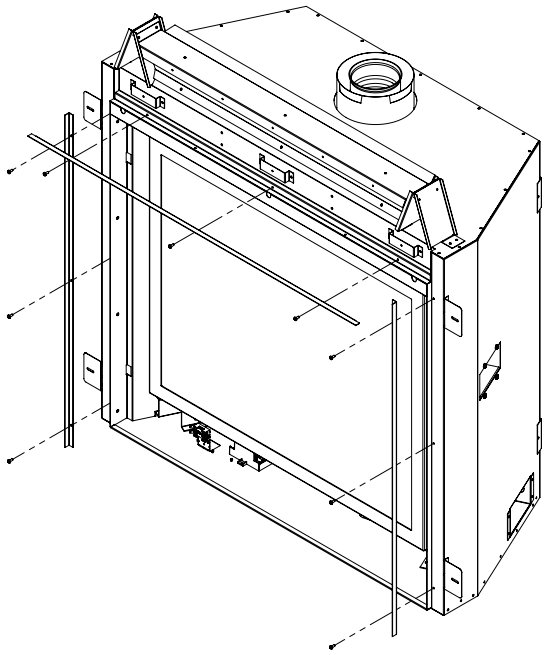

Figure 22: Outer finishing edge removal / replacement

3. Inner Finishing Edge - This finishing edge is integrated into cabinet of the fireplace. The Outer Finishing (Short) will need to be removed. The surround panel once installed will overlap the inner finishing edge. This means the surround panel will hide the edge of the finishing material. This ideal for finishing materials 0.75" or less and the it is desired to hide.

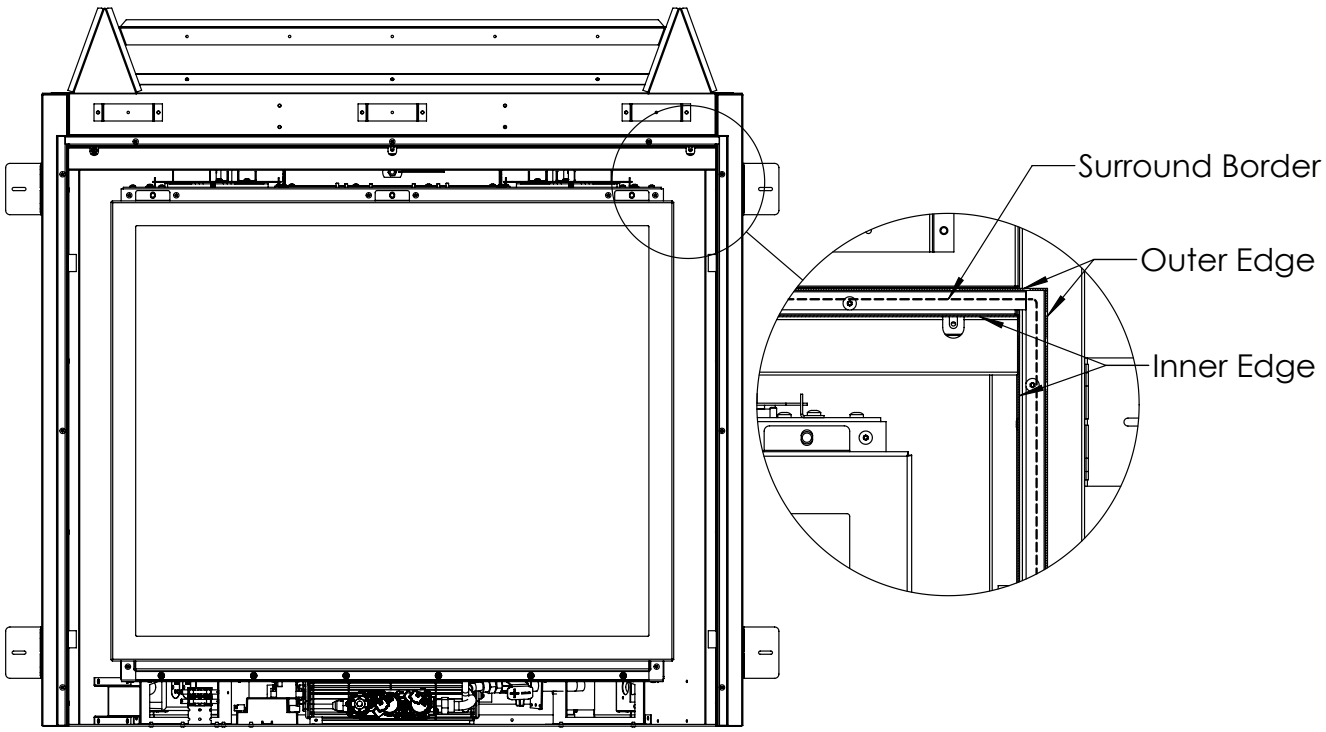

Figure 23: Finishing edges

Initial Installation

QUALIFIED INSTALLERS ONLY

Combustible material may be brought up to any finishing edge ONLY if the Cool Surface System (CSS) has been correctly activated allowing heat in the chase to be vented. This system keeps the front wall cool enough for any combustible materials. The supplied non-combustible board can still be used but is not mandatory when the CSS is activated, combustible material may overlap in this situation.

If the CSS has NOT been activated (Traditional Install) you MUST use a non-combustible material directly above the fireplace extending up the front wall 9" from the top finishing edge, it is recommended to use the supplied non-combustible board. Combustible material must **NOT** be brought up to the top finishing edge. Also combustible material **CANNOT** overlap the non-combustible board on a traditional installation.

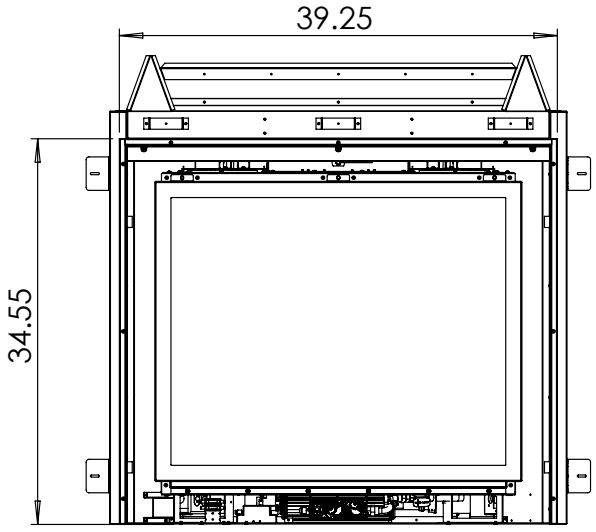

Figure 24: Outer Finishing Edge Dims

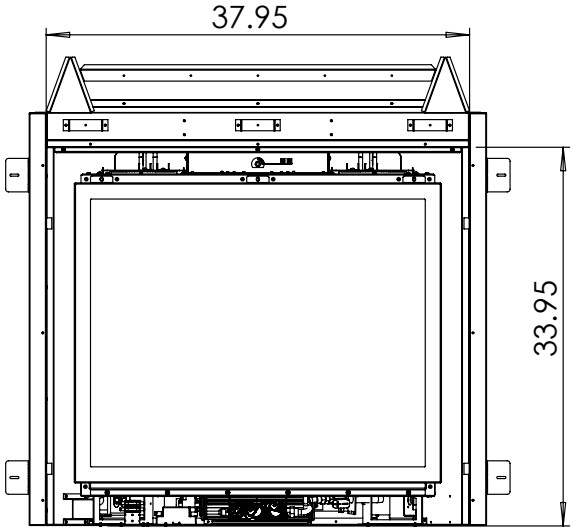

Figure 25: Inner Finishing Edge Dims

NOTE: These are exact dimension add tolerance when cutting finishing material to ensure fit around the finishing edge. This is especially important when using the inner edge. The surround will overlap the inner edge by 0.375" and hide the cut edge.

Cool Surface Activation:

WARNING: IT IS ESSENTIAL THAT THE CHASE IS VENTED IN A MANNER THAT RELIEVES THE ADDITIONAL HEAT ENTERING THE CHASE. ENSURE ONE OF THE AVAILABLE FRAMING OPTIONS HAVE BEEN CONSTRUCTED IN ACCORDANCE WITH THIS MANUAL. FAILURE TO DO SO CAN CREATE AN OVERHEATING SITUATION THAT COULD LEAD TO BUILDING FIRE.

Ensure your chase has been constructed in a manner that vents the chase into the same room. It is not permitted to vent the chase into an adjoining room. The CSS bleeds heat off the fireplace into the chase as opposed to climbing up the front face. This dramatically lowers the front wall temperatures allowing the placement of delicate objects above the fireplace. Review the guidelines in the previous sections to ensure your install is in accordance with the framing specifications. Follow these instructions to active the CSS feature. The non-combustible board included with the fireplace is no longer required when using CSS.

Activation - Remove CSS plug using 1/4" deep socket or flat head screwdriver.

The CSS system is now activated.

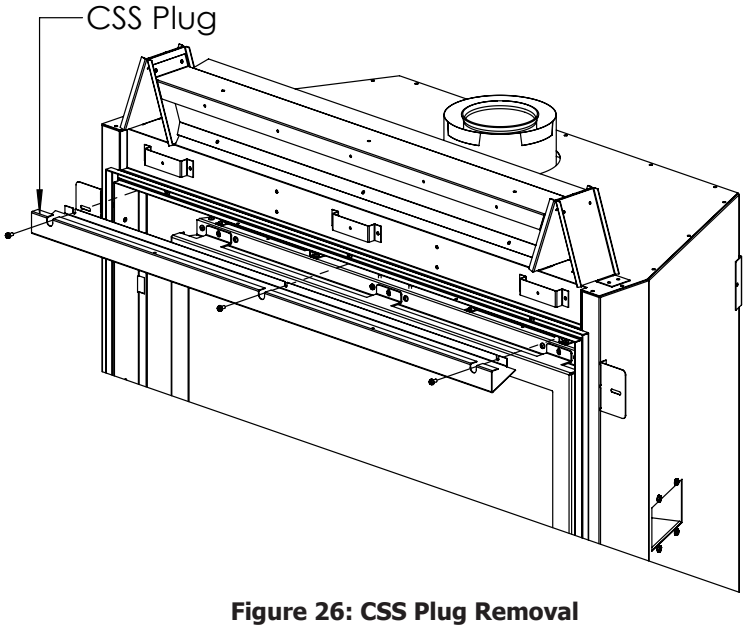

Figure 26: CSS Plug Removal

Initial Installation

QUALIFIED INSTALLERS ONLY

Standard Install: the Non-combustible is mandatory. Image shows single layer finishing material using the short finishing edge.

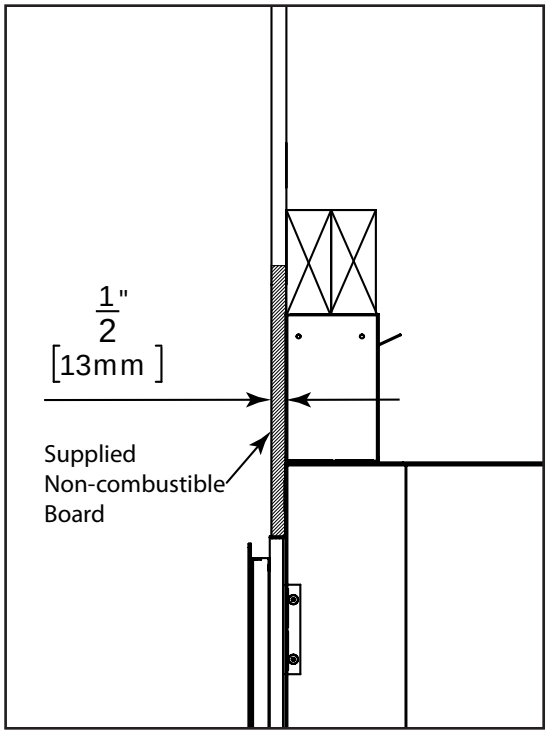

Cool Surface System (CSS) Install: Image shows the short finishing edge, **combustible** can be brought right down to the finishing edge.

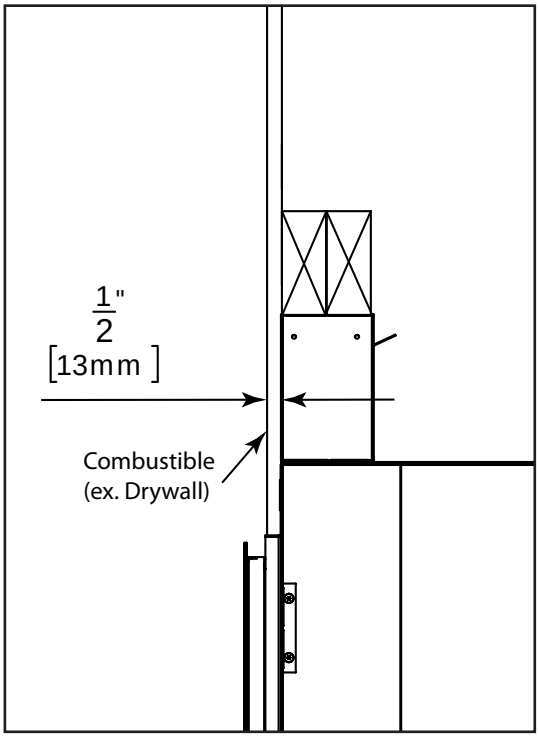

Standard Extended Install: Using the supplied long finishing edge, **non-combustible** material may be layered on top of the supplied Non-combustible board. Supplied board not needed for thick **non-combustible** finishes like rock.

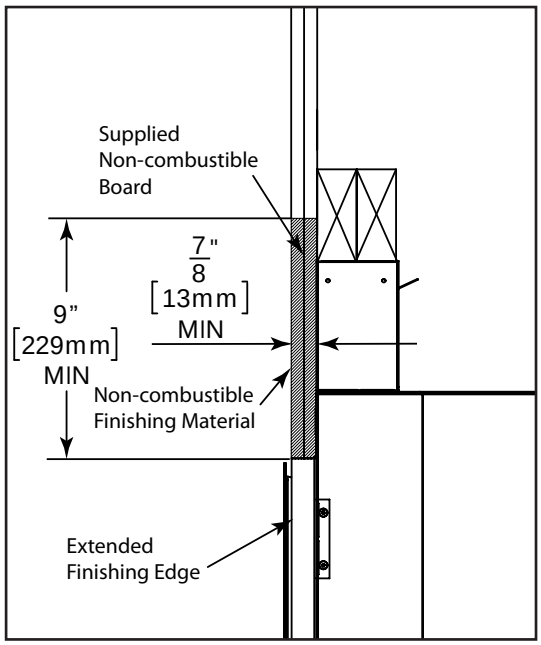

Cool Surface System Extended Install: Using the supplied long finishing edge, **combustible** material may be layered on top of the supplied Non-combustible board. Supplied board is not needed for thicker **combustible** finishes.

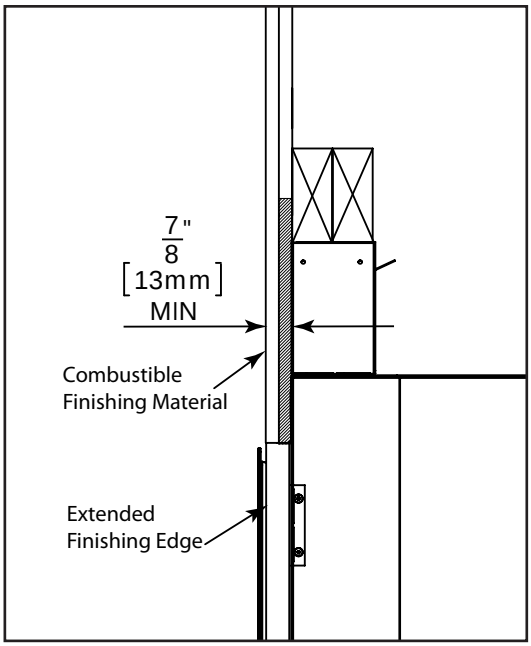

QUALIFIED INSTALLERS ONLY

COOL SURFACE INSTALL OPTIONS:

This fireplace is manufactured with a built-in heat distribution kit, referred to as the Cool Surface System (CSS). The purpose of the CSS is to dramatically reduce the front wall temperatures above your fireplace. This is very useful when delicate objects such as a TV or artwork are mounted above the unit. Using this feature will also allow you to use combustible facing materials right up to the finishing edge. It is extremely important these instructions are followed meticulously. If not installed correctly this could be very dangerous and could lead to building fire. If the CSS is activated it is crucial that the chase is vented in accordance to this manual. There are a few different options available to finish the CSS.

Option 1: Front Discharge (flush wall installations) - Construct the framing in a way that provides a minimum 41 $^{1}/_{2}$ inch (1054mm) by 2 inch (51mm) gap at the top of the facing wall. It is essential that these dimensions are respected and not deviated away from them when using combustible materials inside or outside the chase (see Figure 27A).

Option 2: Front Bezel - The included bezel may be desired to accentuate the front discharge (Option 1). This installation will also cover the edge of the finishing material at the cutout. The top of the cutout must be 1 1/2″ from the top of the chase (see Figures 27A & B). It is essential that these dimensions are followed and not to deviated from them when using combustible materials inside the chase.

Note: If you wish to construct the CSS air discharge part way up a tall wall then it is essential to build a false ceiling inside the chase at the desired height to direct the rising heat out of the gap.

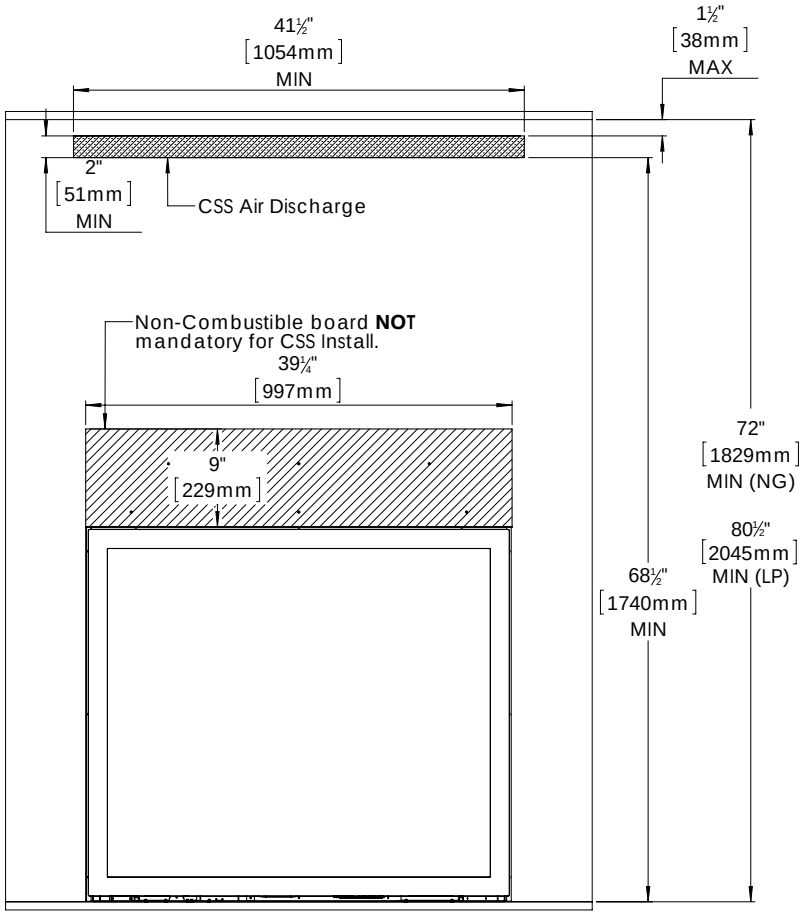

Figure 27A: Options 1 &2 Front Discharge

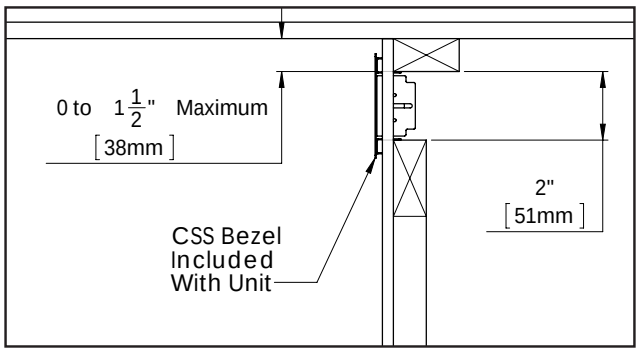

Figure 27B: Option 2 Front Bezel

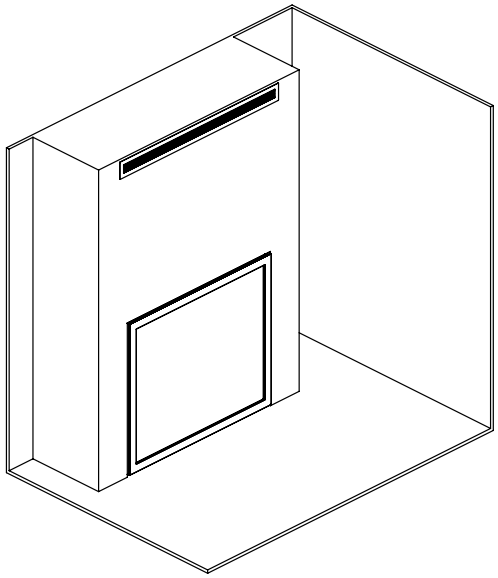

Figure 27C: Front Bezel Iso View

QUALIFIED INSTALLERS ONLY

Option 3: Side Discharge (built-out installations) - Construct the framing in a way that provides a minimum 17 inch (432mm) by $2^{1/2}$ inch (64mm) opening **on each side of the chase**. The top of the opening must be 1 1/2" from the top of the chase (see Figures 28A & 28B)

Note: If you wish to construct the CSS air discharge part way up a tall wall then it is essential to build a false ceiling inside the chase at the desired height to direct the rising heat out of the gap.

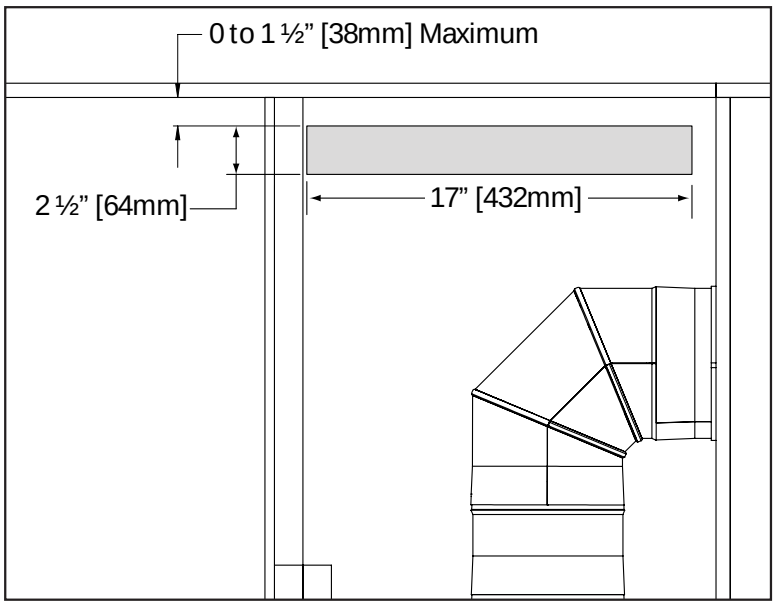

Figure 28A: Option 3 Side Discharge

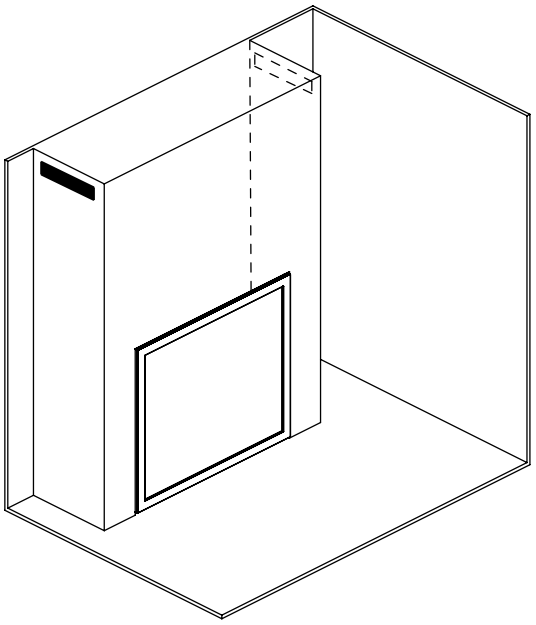

Figure 28B: Side Discharge Iso View

Option 4: Open Chase (built-out installations) - This could be considered the most discreet option when considering the CSS. The chase must be constructed in a way that stops short of the ceiling, leaving it totally vented above. Minimum framing dimensions must be followed when constructing this option and not to deviated from them when using combustible materials. Consider **Option 5: Valance** to work in conjunction with this option.

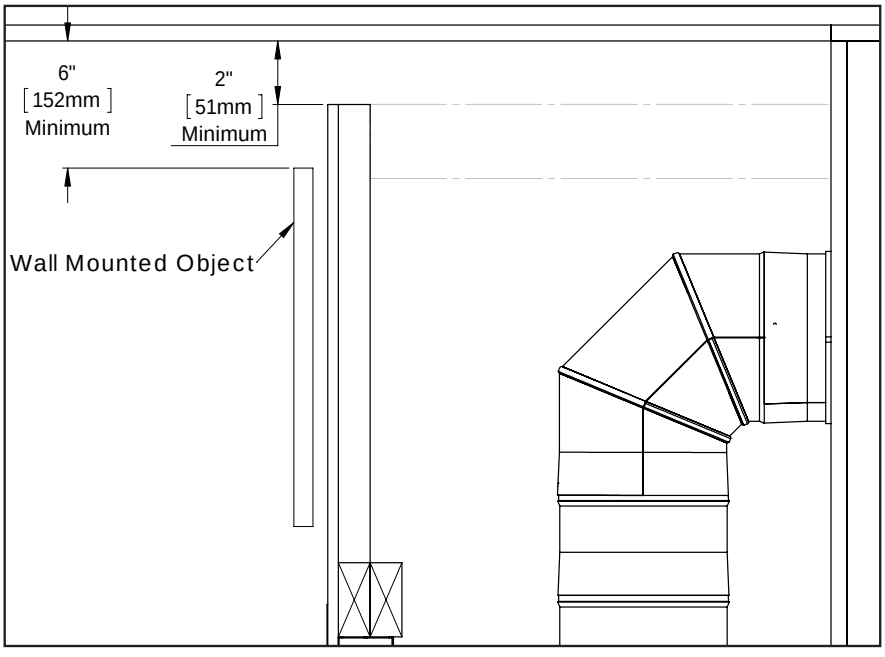

Figure 29A: Option 2

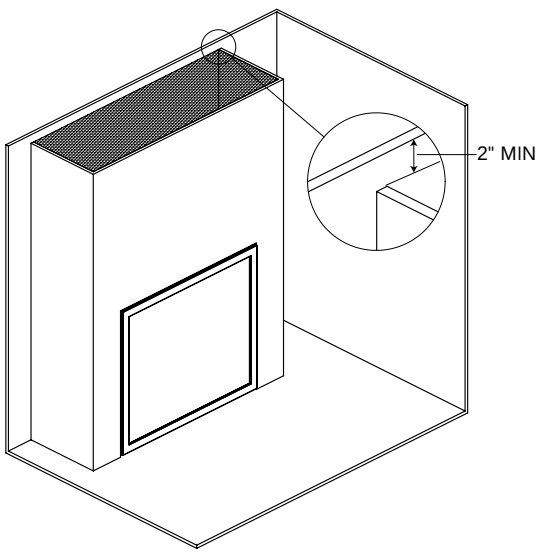

Figure 29B: Open Chase Iso View

QUALIFIED INSTALLERS ONLY

Option 5: Valance - A valance may be desired to accentuate or hide the CSS outlet. Consider framing option 1 or 4 to utilize the valance feature. This is an optional decorative feature that covers up the CSS outlet gap. Minimum opening and valance dimensions must be followed to ensure safe heat dissipation. Combustible materiel is acceptable when constructing the valance. It is acceptable to wrap the valance around the three sides of a built out chase (Option 4).

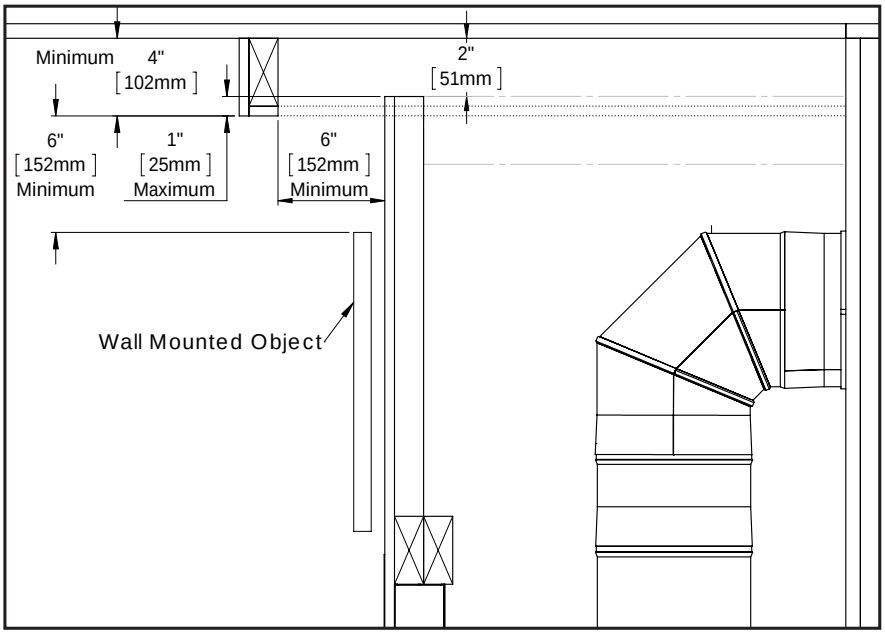

Figure 30A: Valance Install

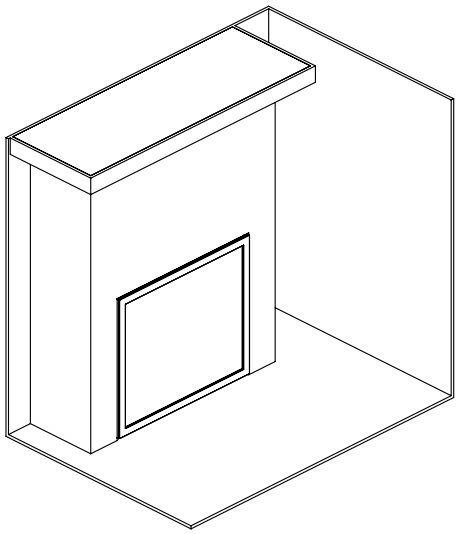

Figure 30B: Valance Iso View

Optional: False Ceiling - If your ceiling dimension is greater than the minimum (See figure 32) You may want the CSS Air discharge lower on the wall. To do this a false ceiling is required to properly evacuate the heat from the chase. (See Figure 31A).

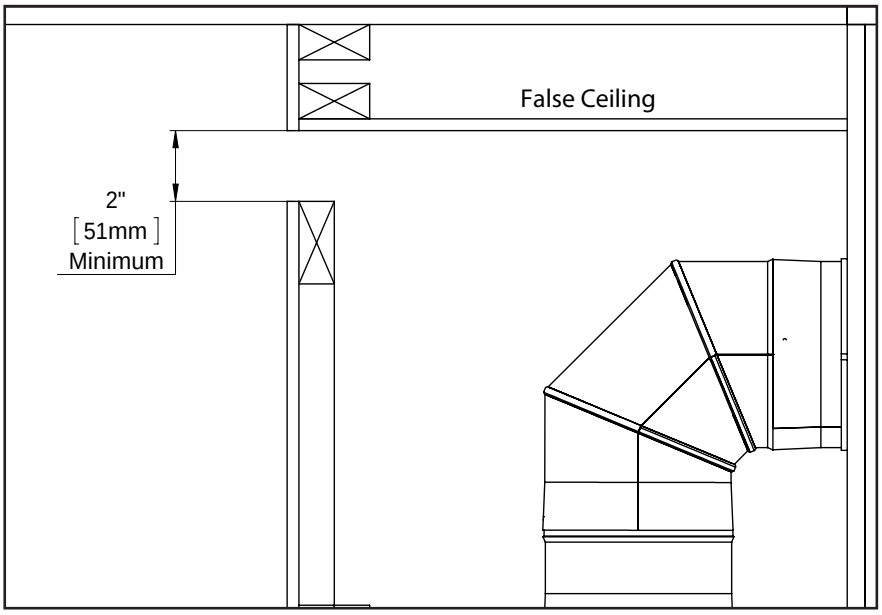

Figure 31A: False Ceiling

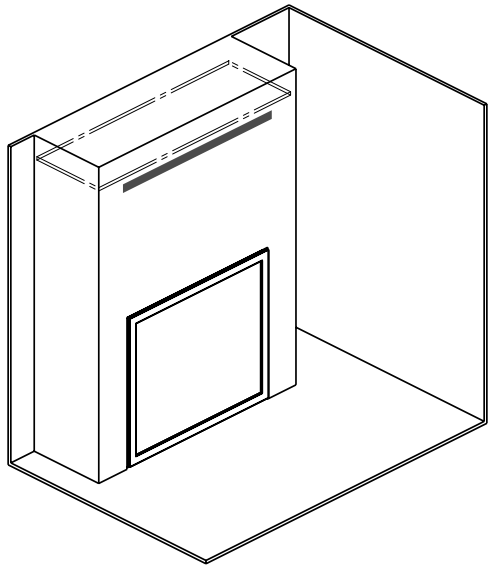

Figure 31B: False Ceiling Iso View

QUALIFIED INSTALLERS ONLY

Flat Wall Installation:

These are the minimum allowable dimensions required to safely operate the fireplace. Plan your entire installation before proceeding. These are minimum dimensions associated with natural gas only; adjust the ceiling dimensions by **adding 6" (152 mm) if using propane**.

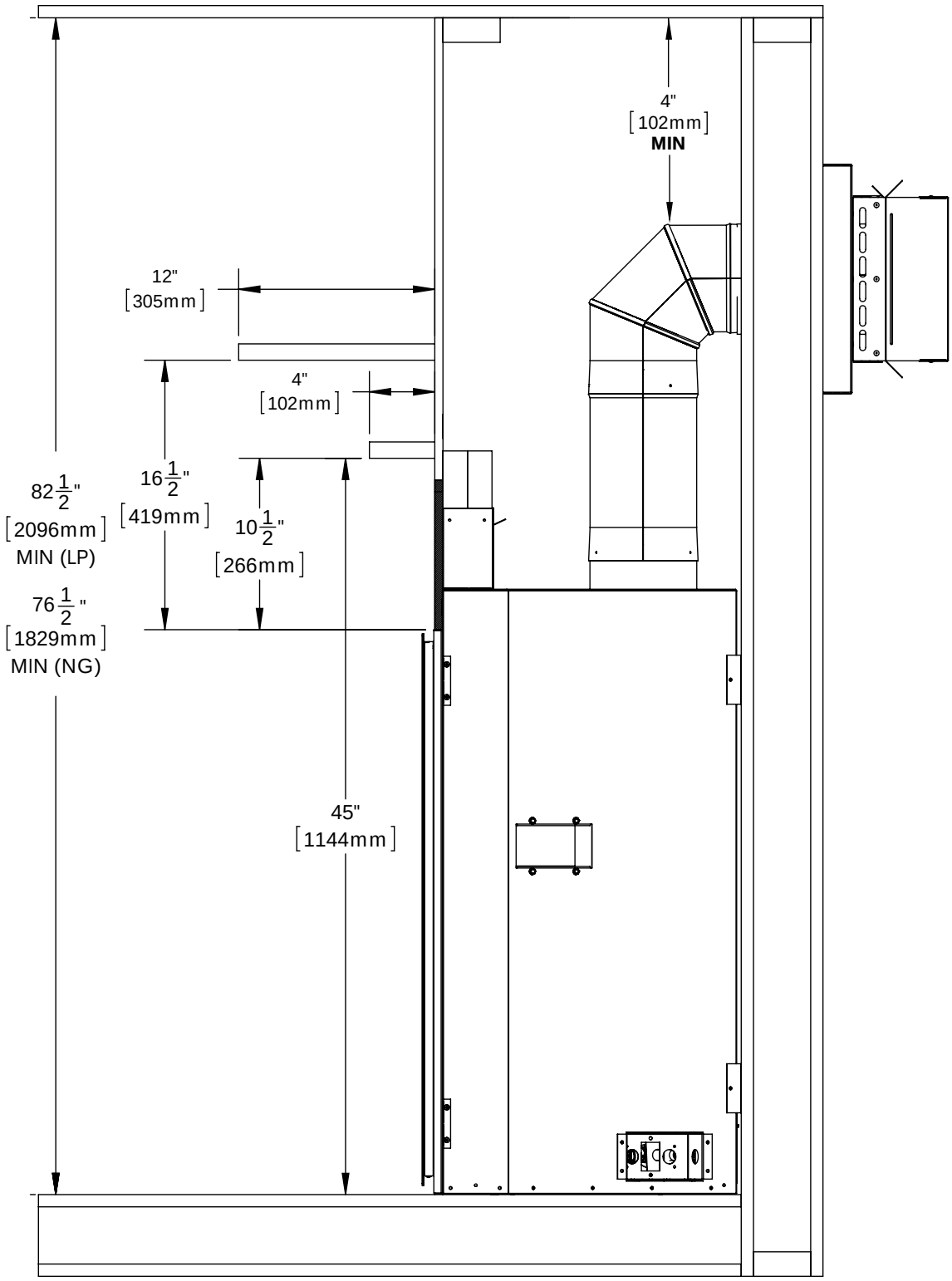

Figure 32: Flat Wall Installation

Recess Installation

These are the minimum allowable dimensions required to safely operate the fireplace. Plan your entire installation before proceeding. The maximum allowable depth for a recess in 3 1/2" (90mm) + Finishing material thickness.

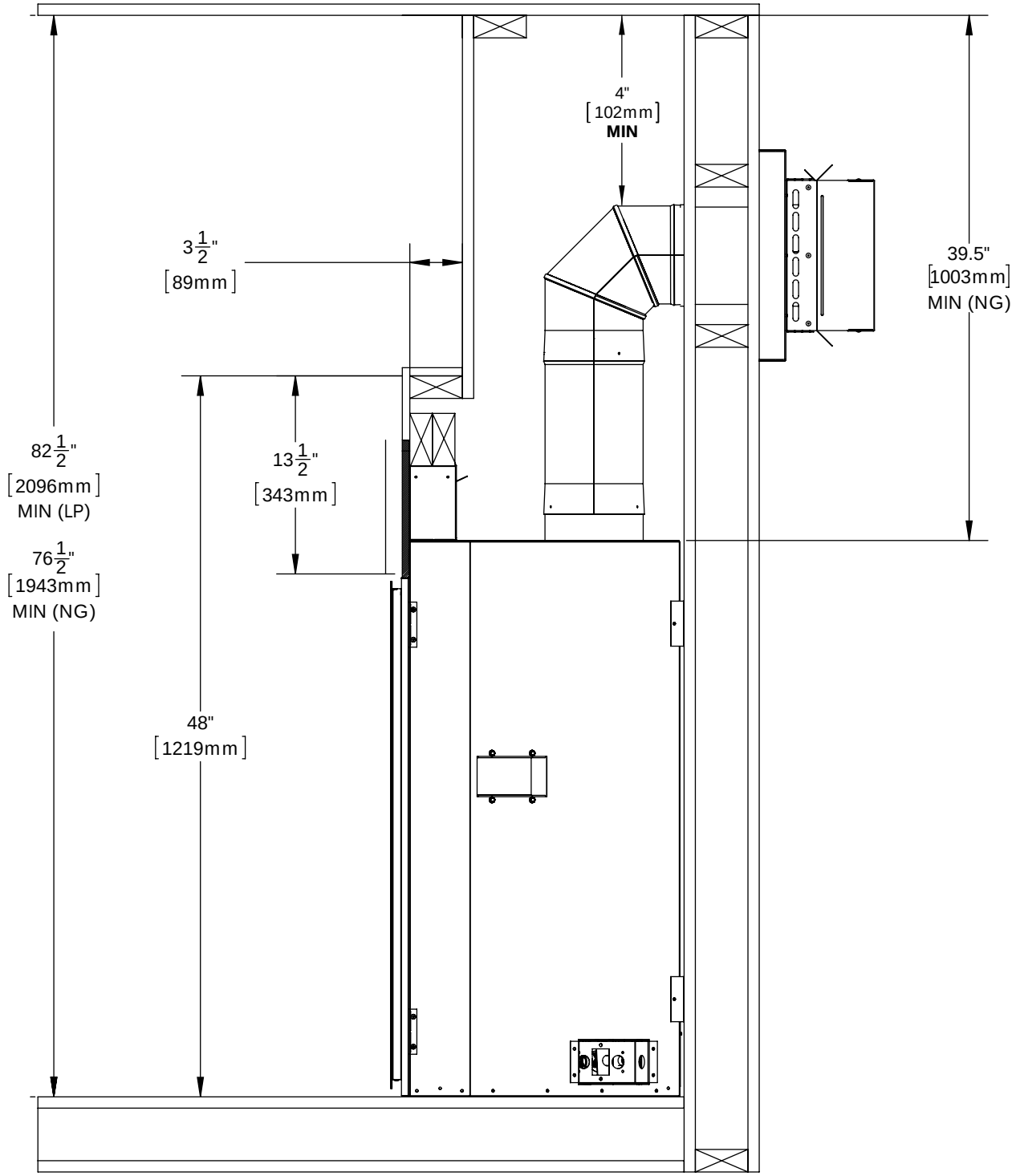

Figure 33: Recess Installation

QUALIFIED INSTALLERS ONLY

Corner Installation:

These are the minimum allowable framing dimensions required to safely operate the fireplace in a corner install. Plan your entire installation before proceeding.

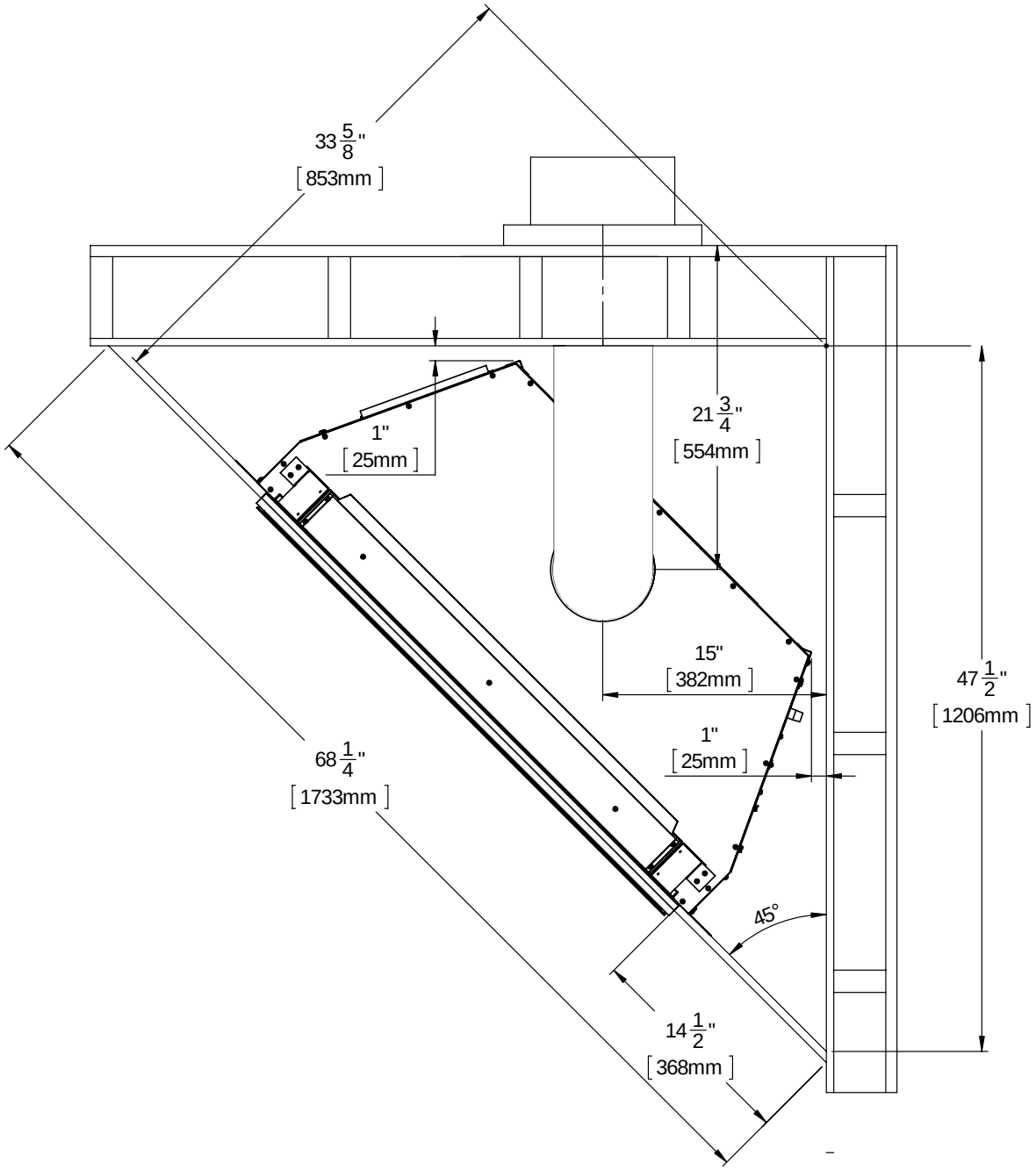

Figure 34. Corner Installation

Initial Installation

QUALIFIED INSTALLERS ONLY

Floor Protection:

The fireplace must be placed on a solid and level floor; plywood is recommended for basic installations. A protective hearth is not required but highly recommended for the longevity of sensitive flooring materials in front of the fireplace.

If masonry is to be used, prepare the necessary foundation for the masonry load. When masonry construction is being used, a lintel must be used over top of the fireplace to support the added weight.

Consider the height of hearth finish material (stone, brick, etc.) when building a fireplace platform. The bottom of the fireplace must be level with finished hearth.

WARNING: DO NOT OBSTRUCT THE BOTTOM AIR GAP WITH FLOORING MATERIAL. RAISE THE FIREPLACE TO MATCH FLOOR THICKNESS.

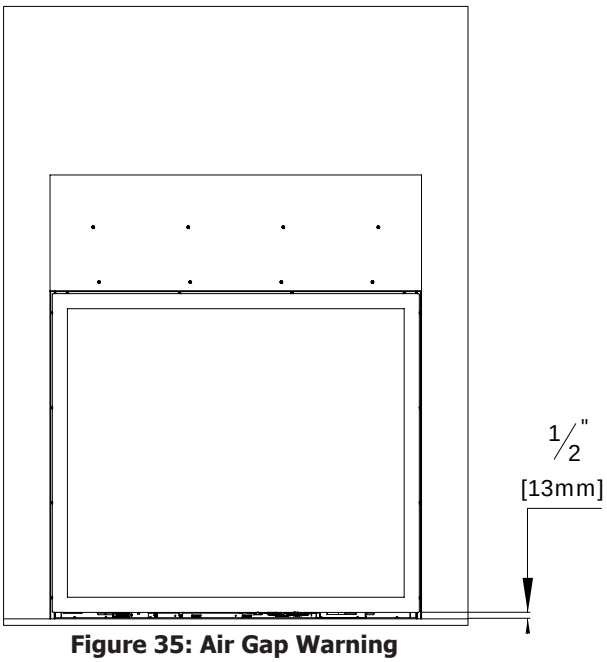

Figure 35: Air Gap Warning

Mantel Requirements:

First determine what mantel height or depth you would like and use the graph to determine the minimum corresponding dimension. Mantel graph dimensions are measured from the bottom of the fireplace, if you wish to reference the mantel height from the tiling edge subtract 34 1/2" (876mm) from the mantel height depicted on the graph. If you plan to install a TV above your fireplace refer to the appropriate section for available options. It is acceptable to install a combustible mantel over top of the non-combustible board. **If you are activating the Cool Surface System you are eligible to subtract 6" (152mm) from the mantel height shown in this diagram.**

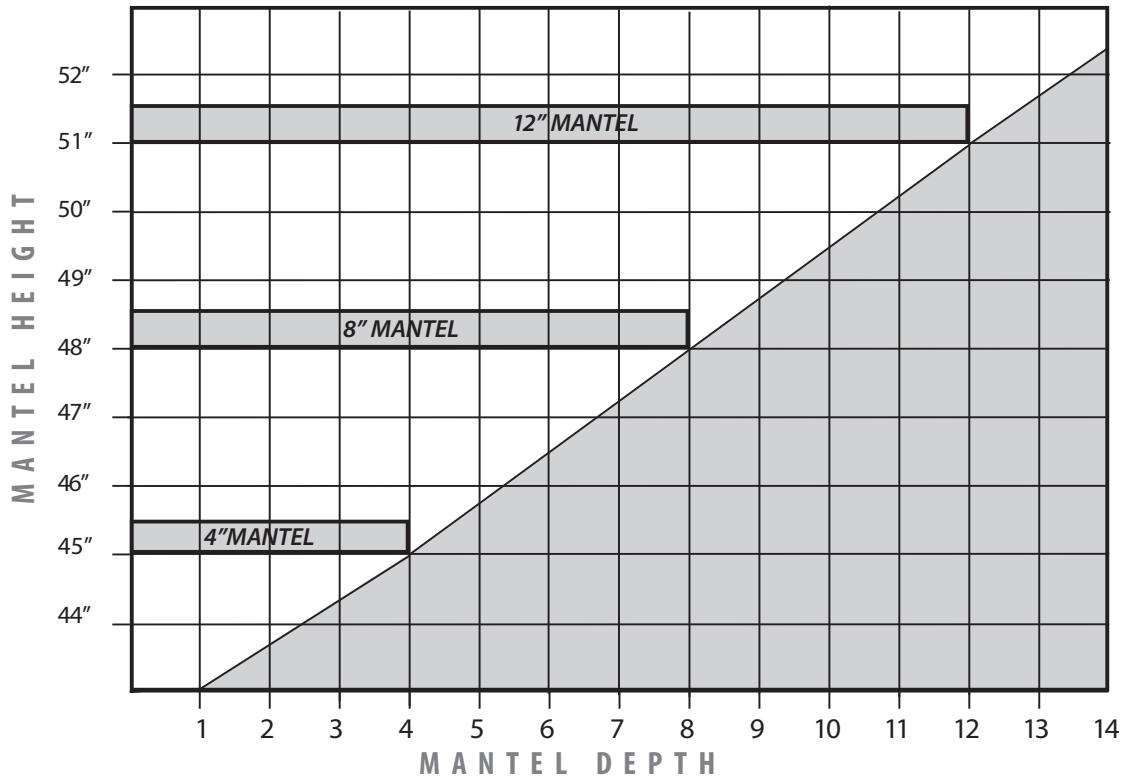

Diagram 2: Mantel Graph

QUALIFIED INSTALLERS ONLY

MINIMUM VENTING REQUIREMENTS:

This appliance uses a 4" (102mm) exhaust / 6 5/8" (168mm) air intake vent pipe system. For safe and proper operation of the appliance follow the venting instructions exactly. Deviation from the minimum vertical length can create difficulty in burner start-up and sooting. Allow several minutes for the flame to stabilize after ignition under extreme vent configurations. It is recommended for vent lengths that pass through unheated spaces (garages, attics, crawl spaces) be insulated to minimize condensation.

NOTE: Measure your total vent height on the unit before a hole is cut into the exterior wall; account for 1/4" (25mm) of rise for every 12" (305mm) of run to determine your thimble height.

NOTE: Center of thimble dimension is based on 12"+6" sections of vertical rise for Natural Gas (NG) installs and 12"+12" sections for units converted to Propane (LP).

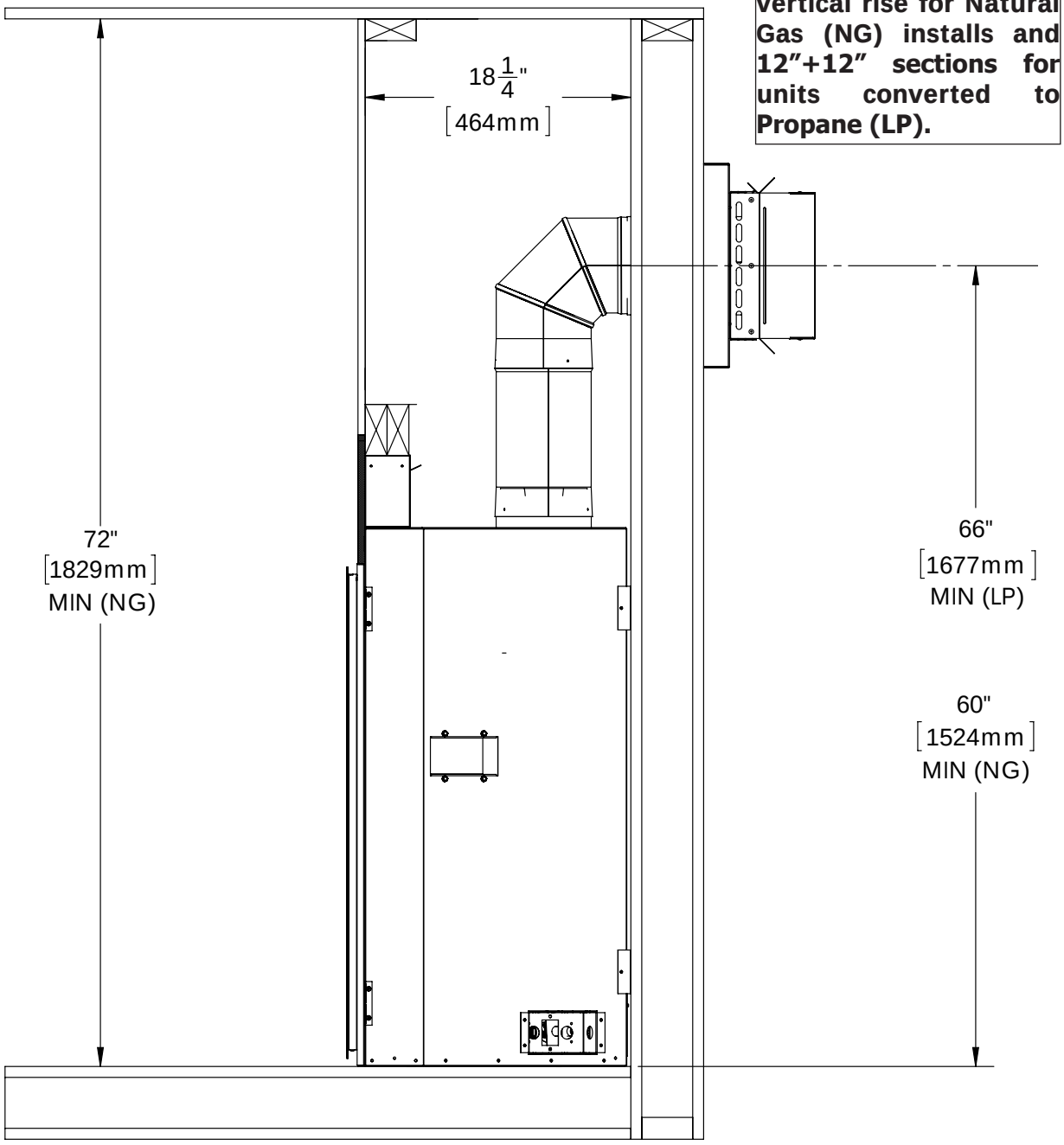

Figure 36: Minimum Vent (NG)

Initial Installation

QUALIFIED INSTALLERS ONLY

Flex Venting:

This fireplace is certified to work with aluminium co-axial flex venting. Flex venting can be used in the same configurations as rigid pipe, see venting diagram for details. Flex venting is only to be used for the run, it must be adapted to rigid piping for exterior wall penetration and termination. **Note: Adhere to all rigid venting safety measures and clearances.**

Use 4X7 Flex Adapter Kit [50-3788]: This kit will allow you to adapt co-axial flex to the fireplace, make your vent run, then adapt back to rigid venting **(flex not included)**.

Any 4X7 CSA or UL flue gas certified aluminum or stainless steel flex is acceptable. Proper spacers must be used to keep pipes from contacting each other. Proper venting spacers must be used, nothing makeshift. Examples of allowable flex pipe brands include, but are not limited to, the following:

- M&G Duravent
- Selkirk Corp
- ICC
- Z-Flex
- Flexmaster
- Chim Flex
- Olympia
- BDM
- Metal-Fab

Only the flex venting and spacers are needed. You must use the flex adapter kit and a certified rigid pipe termination cap.

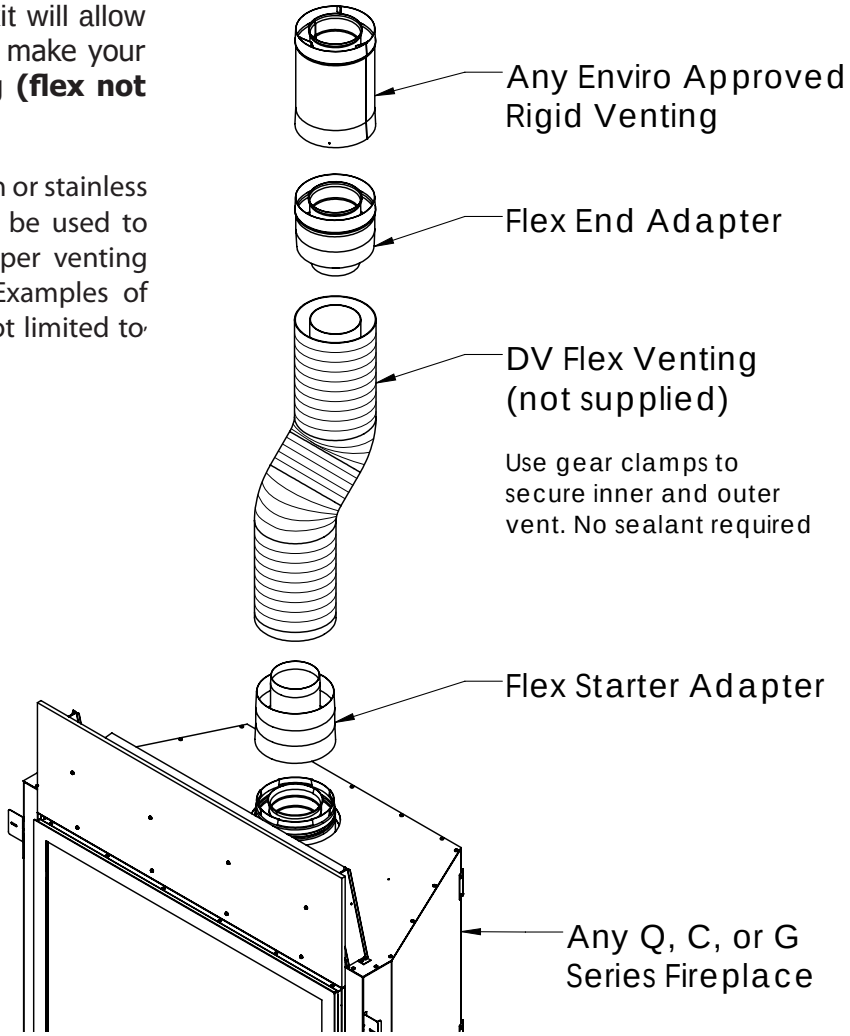

Figure 37. Flex Adapter Kit Install

INSTALLATION NOTES:

- Do not bend flex vent over 90 degrees.
- All horizontal runs should have a minimum 1/4" (6mm) rise per foot for optimal performance.
- Do not allow the inner flex pipe to contact the outer pipe, keep it pulled tight and use spacer springs.
- Spacers are required at the start, middle, and end of each elbow to ensure gap is maintained.
- Do not add any extensions to the preset kits, if more length is required, use rigid pipe.
- No need for liquid sealant; secure flex venting with aluminum vent tape and apply sufficient self-tapping screws.

Initial Installation

QUALIFIED INSTALLERS ONLY

Clearances & Non-Combustible :

When installing the fireplace as a zero clearance fireplace the correct clearances and materials must be used.

Above Unit: The supplied noncombustible board is required above the unit up to the header 9" MIN.

However this not required if the Cool Surface System has been properly installed.

Header: The header can be made up of wood 2x4 construction at or above the top standoffs.

Below Unit: Is is recommended the fireplace sit a solid and level piece of 3/4" plywood.

Adjacent/Sidewall: There must be a minimum distance of **7" (178mm)** from the finishing edge of the fireplace to an adjacent wall composed of combustible material.

Mantel: It is not necessary to install a mantel, but if one is desired the guidelines as shown in "Initial Installation - Mantel Requirements".

Floor: The unit must be raised to accommodate flooring thickness. Always ensure convective air gaps around the unit remain unobstructed. Combustible flooring can be used but make sure to review the maximum allowable temperature for your specific flooring material. Since every home and installation is unique, temperatures should be verified at the time of install. A hearth should be installed if temperatures exceed the manufacturers maximum allowable temperature.

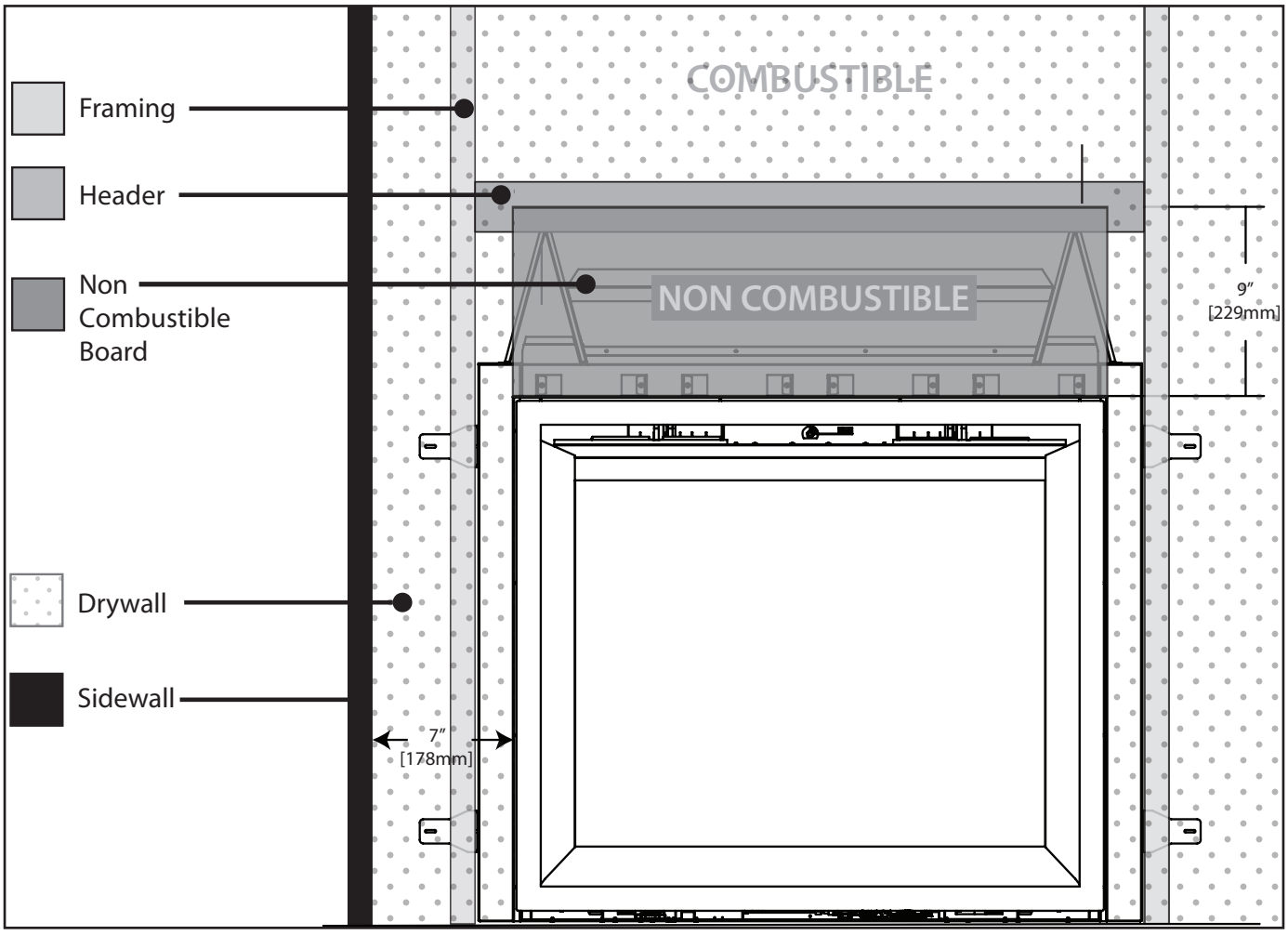

Figure 38. Typical Facing Layout

Initial Installation

QUALIFIED INSTALLERS ONLY

TV Installation Considerations:

Use of the Cool Surface System is highly recommended when mounting a TV or delicate artwork above the fireplace. If the system is not desired, some considerations must be made to ensure above objects are protected from the heat. A recess, mantel, or a combination of both will be needed for heat protection.

During testing temperatures did not exceed 120F over ambient in a 3 1/2" deep recess. There is no guarantee that these temperatures will not harm the longevity of your TV. Make sure to consult your TV manufacture's specifications to find the maximum allowable operating temperature. Since every home and installation is unique, temperatures should be verified at the time of install. A TV should not be installed if temperatures exceed the manufacturers maximum allowable temperature.

Mantel Only Installation: Always maintain minimum clearances (see Figure 39). The total depth of the TV and wall mount will determine the minimum allowable mantel depth. This is required for a standard installations and highly recommended for CSS installations.

Recess Installation: Always maintain minimum clearances (see Figure 40). The total depth of the TV and wall mount as well as the recess depth will determine the minimum whether or not a mantel is recommended. A mantel may not be needed if the TV and Mount are low profile enough.

A mantle is not mandatory but highly recommended for protection of a TV. If choosing to not use a mantel you should place the TV as high up the wall as possible. Please consult the TV manufacture's specifications to find the maximum allowable operating temperature. Temperatures should be confirmed on site after an extended burn.

See "Initial Installation - Mantel Clearances" and "Initial Installation - Recess Installation" for more information.

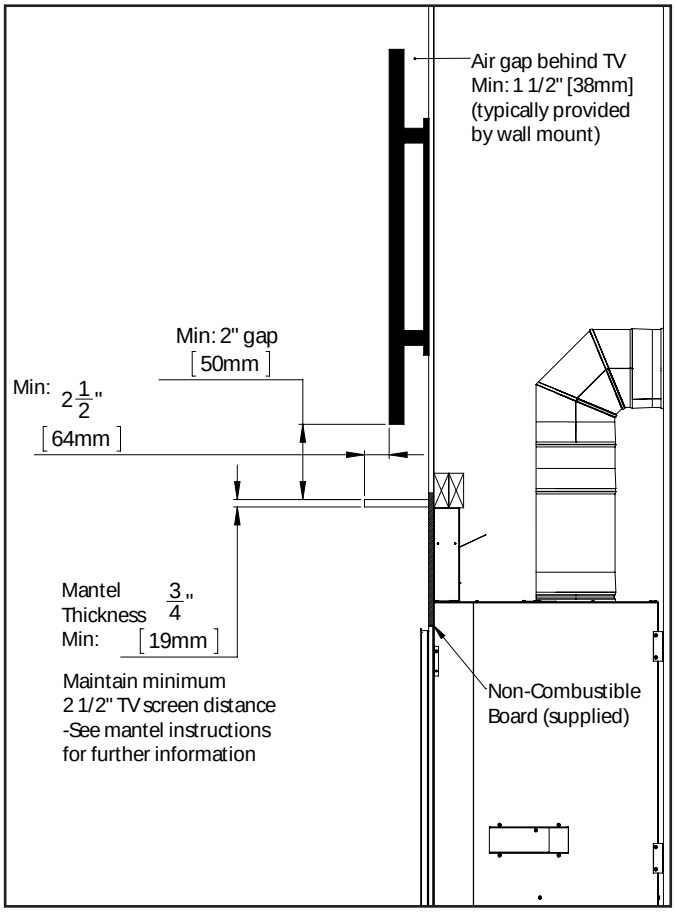

Figure 39. Minimum TV Install

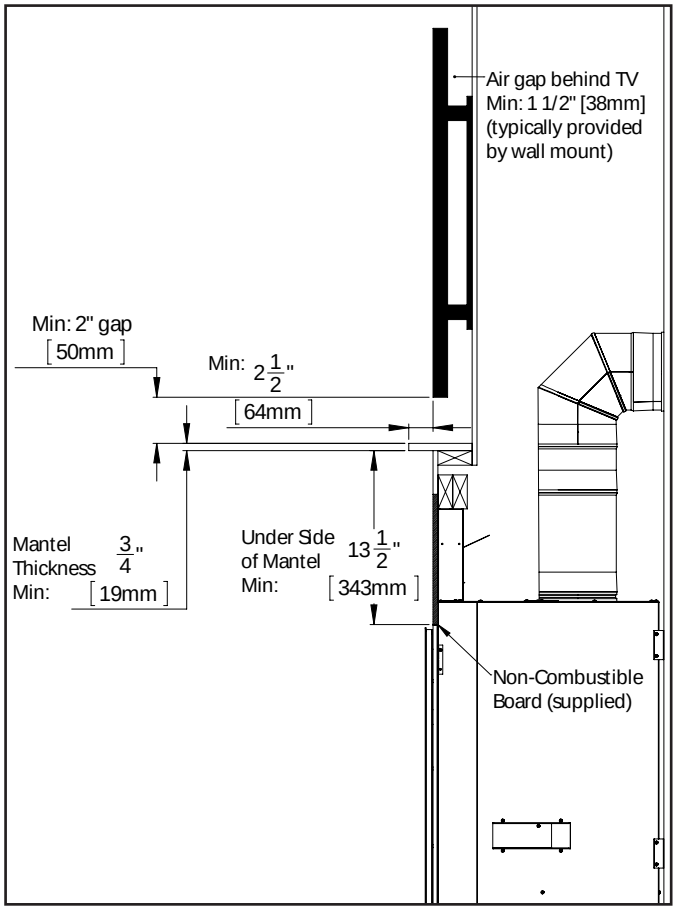

Figure 40. Recess Minimum TV Install

Initial Installation

QUALIFIED INSTALLERS ONLY

Direct Vent:

WARNING:
- Follow the venting instructions exactly for safe and proper appliance operation.
- Use Mill Pac or high temp RTV silicone for all venting aconnections.
- Risk of fire, explosion, or asphyxiation if improper venting setup.
-Risk of fire, do not allow loose materials or insulation to contact vent pipe. Remove insulation to allow installation of thimble and maintain clearances to combustible materials.

This appliance uses a 4" (102mm) exhaust / 6 5/8" (168mm) air intake vent pipe system. For safe and proper operation of the appliance follow the venting instructions exactly. Deviation from the minimum vertical length can create difficulty in burner start-up and sooting. Allow several minutes for the flame to stabalize after ignition under extreame vent configurations. It is recommended for vent lengths that pass through unheated spaces (garages, attics, crawl spaces) be insulated to minimize condensation. Use atleast three (3) screws at each vent connection. Check periodically that the vents are unrestricted, especially the exterior vent cap.

Vent Termination Restrictions:

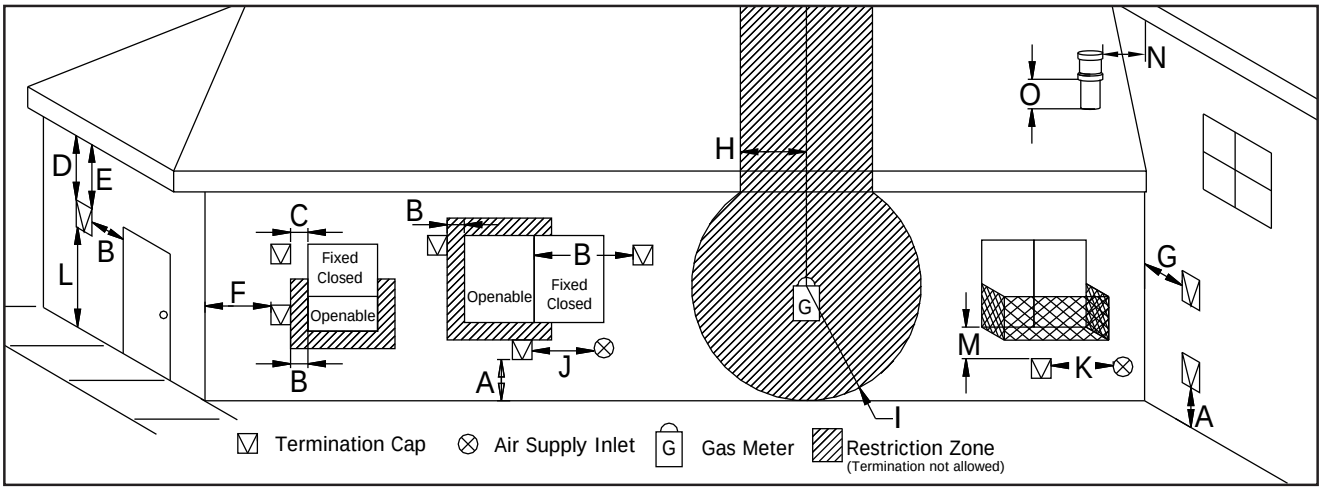

Figure 41. Vent Termination Restrictions, refer to Table 4

Table 4: Vent Termination Clearances

Letter	Canadian Installation [1]	US Installation[2]	Description
A	12 in (30 cm)		Clearance above grade, verandah, porch, deck, or balcony.
B	12 in (30 cm)		Clearance from window or door that may be opened.
C	12 in (30 cm)*		Clearance from permanently closed window (to prevent condensation).
D	14 in (36 cm)*		Vertical clearance to ventilated soffit located above the terminal, within a horizontal distance of 2 ft (60 cm) from center line of terminal.
E	12 in (30 cm)*		Clearance to unventilated soffit.
F	12 in (30 cm)*		Clearance to outside corner.
G	12 in (30 cm)*		Clearance to inside corner.
H	3 ft (91 cm) within a height of 15 ft (4.5 m) above the meter/ regulator assembly	3 ft (91 cm) within a height of 15 ft (4.5 m) above the meter/ regulator assembly*	Clearance to each side of center line extended above meter/regulator assembly.
I	3 ft (91 cm)	3 ft (91 cm)*	Radial clearance around service regulator vent outlet.

QUALIFIED INSTALLERS ONLY

J	12 in (30 cm)		Clearance to non-mechanical air supply inlet to building, or the combustion air inlet to any other appliance.
K	6 ft (1.83 m)	3 ft (91 cm) above if within 10 ft (3 m) horizontally	Clearance to mechanical air supply inlet.
L	7 ft (2.13 m)[t]	7 ft (2.13 m)*[t]	Clearance above paved sidewalk or paved driveway located on public property.
M	12 in / 30 cm[+]	12 in / 30 cm*[+]	Clearance under verandah, porch, deck, or balcony.
N	12 in (30 cm)*		Clearance horizontally to any surface (such as an exterior wall) for vertical terminations.
O	12 in (30 cm)		Clearance above roof line for vertical terminations.

[1] In accordance with the current CSA B149.1, Natural Gas and Propane Installation Code.
[2] In accordance with the current ANSI Z223.1 NFPA 54, National Fuel Gas Code.
* These numbers are only estimates.
[t] A vent shall not terminate directly above a side walk or paved driveway that is located between two single family dwellings and it serves both dwellings.
[+] Permitted only if verandah, porch, deck, or balcony is fully open on a minimum of two sides beneath the floor.

Clearances must be in accordance with local installation codes and requirements of the gas supplier.

NOTE: Venting terminals shall not be recessed into walls or siding.

GENERAL VENTING CLEARANCES:

A **1" (25 mm)** clearance to combustibles must be maintained around any vertical vent pipe. Around a horizontal vent pipe, the clearance to combustibles should be **3" (76 mm)** above and **1" (25 mm)** on the sides and bottom. When combustible materials are directly above the first 90° elbow, **4" (102 mm)** of clearance is necessary.

Table 5. Vent Pipe Minimum Clearances

	Vertical Pipe to the Side Walls	Horizontal Pipe to the Sides & Bottom	Above First Elbow	Above Subsequent Elbows	Above Horizontal Vent Pipe	Wall Frame 8" (203mm) or less
Hard Pipe	1" (25mm)	1" (25 mm)	4" (102mm)	3" (76 mm)	3" (76 mm)	3" top (76mm)

See certified thimbles in venting section and frame accordingly (see Figure 42). A thimble will assure the proper support and spacing requirements for the vent pipe as it passes through the exterior wall. Installations in Canada require that a wall thimble be used for passing through walls and ceilings. All sealing and vapour barriers must comply with local building codes.

The venting configuration depends on the locations of walls, ceilings, and studs. However, the pipes cannot be of arbitrary length and arrangement. Certain guidelines have been set in "INITIAL INSTALLATION - ALLOWABLE CO-AXIAL VENT CONFIGURATIONS" because the length of the vertical and horizontal sections dramatically affects the burning efficiency of the fireplace.

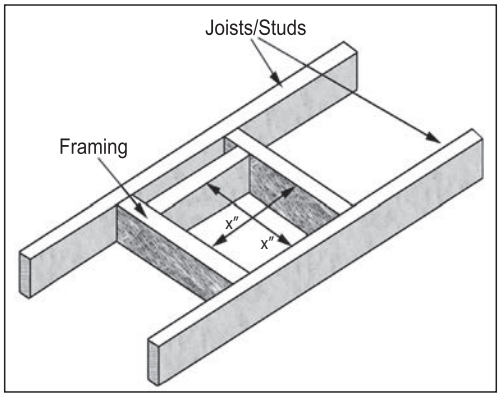

Figure 42. Thimble Framing

WARNING:

-This gas appliance must be direct vented and can't be connected to a chimney flue serving a separate solid-burning appliances.

-Venting terminals cannot be recessed into a wall or siding.

QUALIFIED INSTALLERS ONLY

APPROVED VENTING PARTS:

Table 6: Approved Vent Manufacturers

Manufacturer	Trade Name	Nominal Sizes
ICC	EXCELDirect	4" - 6 5/8"
M&G Dura-Vent	Direct Vent Pro	4" - 6 5/8"
Selkirk	DIRECT-TEMP	4" - 6 5/8"
Sekirk	AMP DV	4" - 6 5/8"
BDM	Pro Form	4" - 6 5/8"

This fireplace has been tested and certified for use with M&G DuraVent DirectVent Pro, ICC EXCEL Direct, Selkirk DIRECT-TEMP, and Selkirk AMP DV venting systems. Refer to the table below for part numbers of commonly used parts for both venting systems. For more venting parts please visit the respective manufacturers' website.

WARNING: Do not mix parts from different vent manufacturers' systems.

EXCEPTION TO WARNING: This product has been evaluated by Intertek for using a DirectVent Pro starting collar in conjunction with EXCELDirect venting systems. Use of this system with the DirectVent Pro starting collar is deemed acceptable and does not affect the Intertek listing of the appliance.

Table 7: Vent Part Numbers (must state if galvanized or black wanted)

Direct Vent Pro	EXCELDirect	DIRECT-TEMP	AMP DV	Description
46DVA-06	4DL6	4DT-06		6" pipe length
			4D7	7" pipe length
46DVA-09	4DL9	4DT-09		9" pipe length
46DVA-12	4DL1	4DT-12	4D12	12" pipe length
46DVA-16		4DT-16		18" pipe length
46DVA-24	4DL2	4DT-24		24" pipe length
46DVA-36	4DL3	4DT-36	4D3	36" pipe length
46DVA-48	4DL4	4DT-48	4D4	48" pipe length
46DVA-60				60" pipe length
46DVA-E30				30° elbow, black
46DVA-E45	4DE45	4DT-EL45	4D45L	45° elbow, black
46DVA-E90	4DE90	4DT-EL90	4D90L	90° elbow, black
46DVA-VSS, DVA-BVS	VSS	4DT-VS, VSK	4DHVS, DVSK	Vinyl siding standoff/sheild
46DVA-WT, 46DVA-WTU	4WT	4DT-WT	4DWT	Wall thimble
46DVA-SC	SQSC, SC	4DT-SC	4DSC	Storm collar
46DVA-WFS		4DT-FS		Wall Fire stop
46DVA-FS	4CS	4DT-FS	4DFSP	Ceiling Fire stop
46DVA-IS	4AS	4DT-AIS	4DAIS12, AIS36	Attic Insulation Shield
46DVA-WS	4WS	4DT-WS/B	4DWS	Wall strap/support/band
46DVA-HC	HT4	4DT-HC	4DHCS	High wind horizontal termination
46DVA-VCH	4SVT			High wind vertical termination
46DVA-17TA				11" to 17" pipe, adjustable
46DVA-24TA				17" to 24" pipe, adjustable
	4DLA30			16.5" to 29" pipe , adjustable
	4DLS1			1 7/8" to 9" slip length pipe
	4DLS2			1 7/8" to 21" slip length pipe
			4D7A	3" to 5" pipe, adjustable
		4DT-AJ12	4D12A	4" to 10" pipe, adjustable
			4D16A	3" to 14" pipe, adjustable
			4D26A	3" to 24" pipe, adjustable
		4DT-TL14		14" to 22" pipe, telescopic
		4DT-TL36		38" to 70" pipe, telescopic
46DVA-F6	6EFA	4DT-AF6	4DF	Flashing, 0/12 to 6/12 roof pitch
46DVA-F12	6EFB	4DT-AF12	4DF12	Flashing, 7/12 to 12/12 roof pitch
46DVA-FF	6EF			Flat Roof Flashings
46DVA-CFK	4MF			Masonary Flashing
46DVA-KCT	MA	4DT-MCK	4DRCKM	Masonry Conversion Kit

QUALIFIED INSTALLERS ONLY

ALLOWABLE CO-AXIAL VENT CONFIGURATIONS:

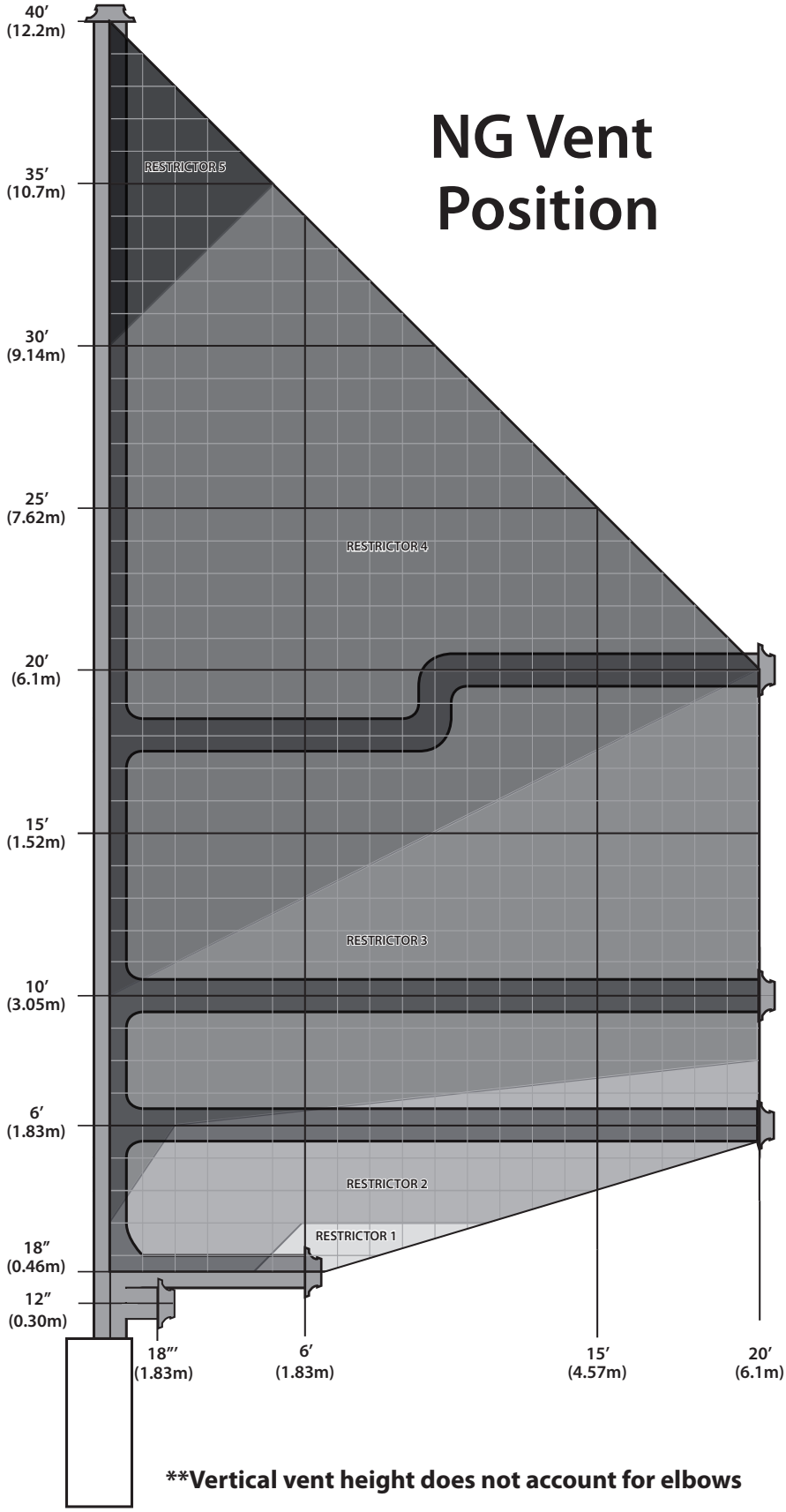

Figure 43. Natural Gas Vent Graph

This shows the range of venting options using either vertical or horizontal terminations; any layout that remains within the shaded area is acceptable. Having the fewest number of elbows is ideal as they restrict air movement. The total length of horizontal vent pipe can not exceed 20 feet (6.1m) and the total vertical vent length can not exceed 40ft (12.2m). Any combination of rise and run can be used as long as it lays within the shaded area (a total of three (3) 90˚ elbows or six (6) 45˚ elbows can be used. In addition to what is shown, if a 90˚ elbow is used in the horizontal plane, 3 feet (91.4cm) must be subtracted from the allowable horizontal run (for each 45˚ elbow, 1½ feet (45.7cm) must be subtracted).

Restrictor Setting: Find the point on the graph where your vent configuration will terminate. Remember to consider elbows in the HORIZONTAL plane account for horizontal distance as stated above. Use the corresponding exhaust restrictor setting indicated on the graph. See the following section in this manual for restrictor details. Your climate and altitude may alter what restrictor is required for your particular application.

High wind guard required for all vertical vent runs with no horizontal run.
ICC EXCELDirect TM-SVTS
M&G Duravent Pro 46DVA-VWG

Does your vent configuration fall outside the limits? Use our power vent kit (50-3884) for a much broader venting range.

QUALIFIED INSTALLERS ONLY

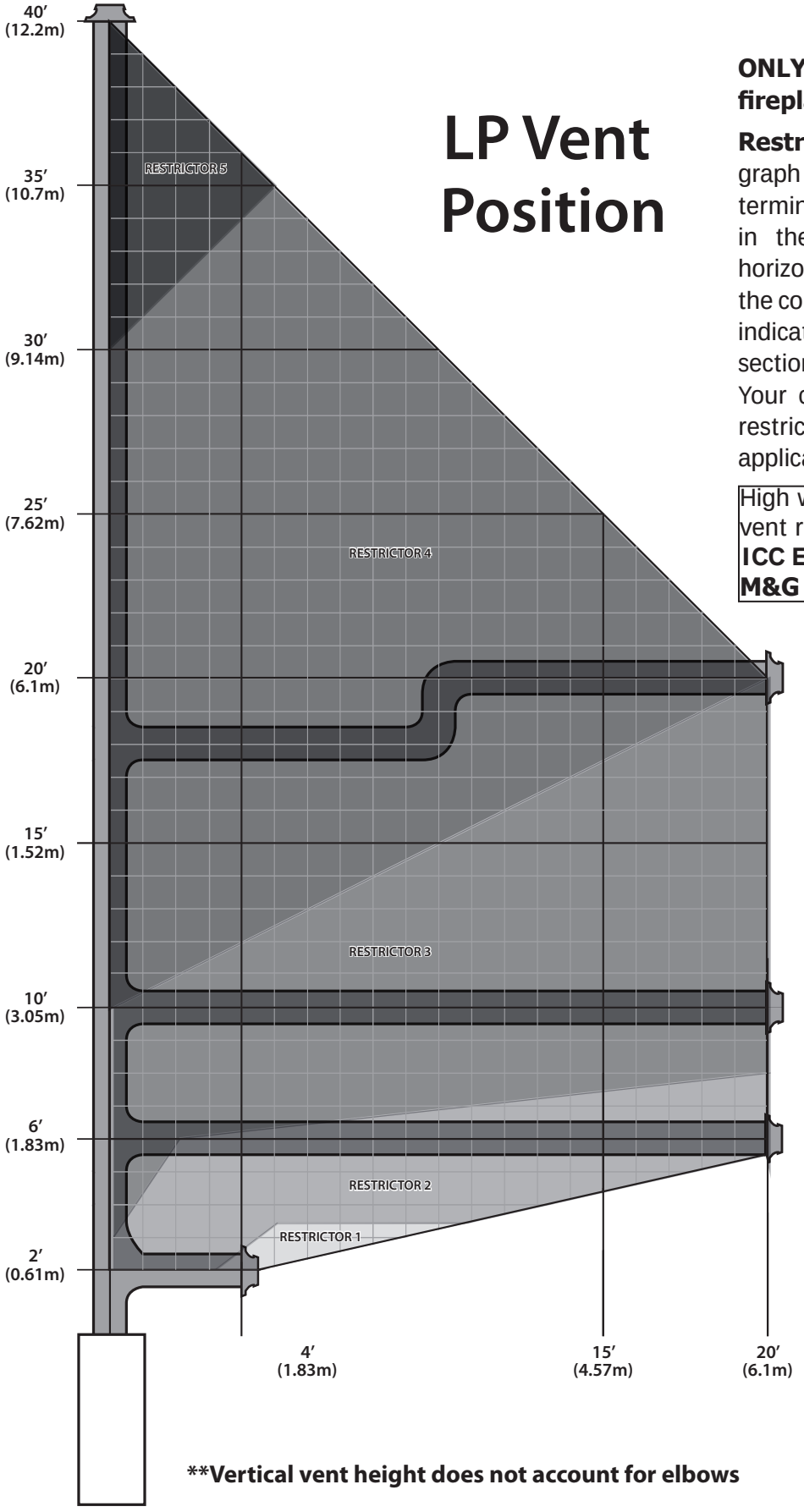

ONLY use this venting diagram if your fireplace has been converted to LP.

Restrictor Setting: Find the point on the graph where your vent configuration will terminate. Remember to consider elbows in the HORIZONTAL plane account for horizontal distance as stated above. Use the corresponding exhaust restrictor setting indicated on the graph. See the following section in this manual for restrictor details. Your climate and altitude may alter what restrictor is required for your particular application.

High wind guard required for all vertical vent runs with no horizontal run.
ICC EXCELDirect TM-SVTS
M&G Duravent Pro 46DVA-VWG

Does your vent configuration fall outside the limits? Use our power vent kit (50-3884) for a much broader venting range.

****Vertical vent height does not account for elbows**

Figure 44. LP Vent Graph

QUALIFIED INSTALLERS ONLY

Exhaust Restrictor Setting:

WARNING: Improperly set restrictor setting can cause overheating issues which can lead to building fire.

It may be necessary to adjust the exhaust restrictor in order to control combustion quality and flame appearance. There are six different restrictor settings.

Determine what restrictor setting you require using the vent graphs in "Initial Installation - Allowable Co-axial Vent Configurations. The restrictor is set to 1 when the flat edge of the dial is vertical (see Figure 46). Rotate the dial counter-clockwise to increase the restriction level successively until the appropriate setting is achieved. When the flat edge is horizontal the restrictor level is at its maximum (see Figure 45). The proper setting is crucial for an efficient burn and best possible flame appearance.

It may be necessary to deviate from the recommended setting as different altitudes and climates can vary the operation of the fireplace. With LP fueled fireplaces, it is always a good idea to offer slightly less restriction for higher altitudes to reduce the risk of sooting over an extended period.

Step 1. Remove surround panel to gain access to restrictor control.

Step 2. Use a 7/16 socket with long extension to adjust the restrictor dial according to the vent graph.

Step 3. Allow unit to warn up sufficently and make adjustment as needed.

Step 4. Allow unit to cool down and reinstall surround panel.

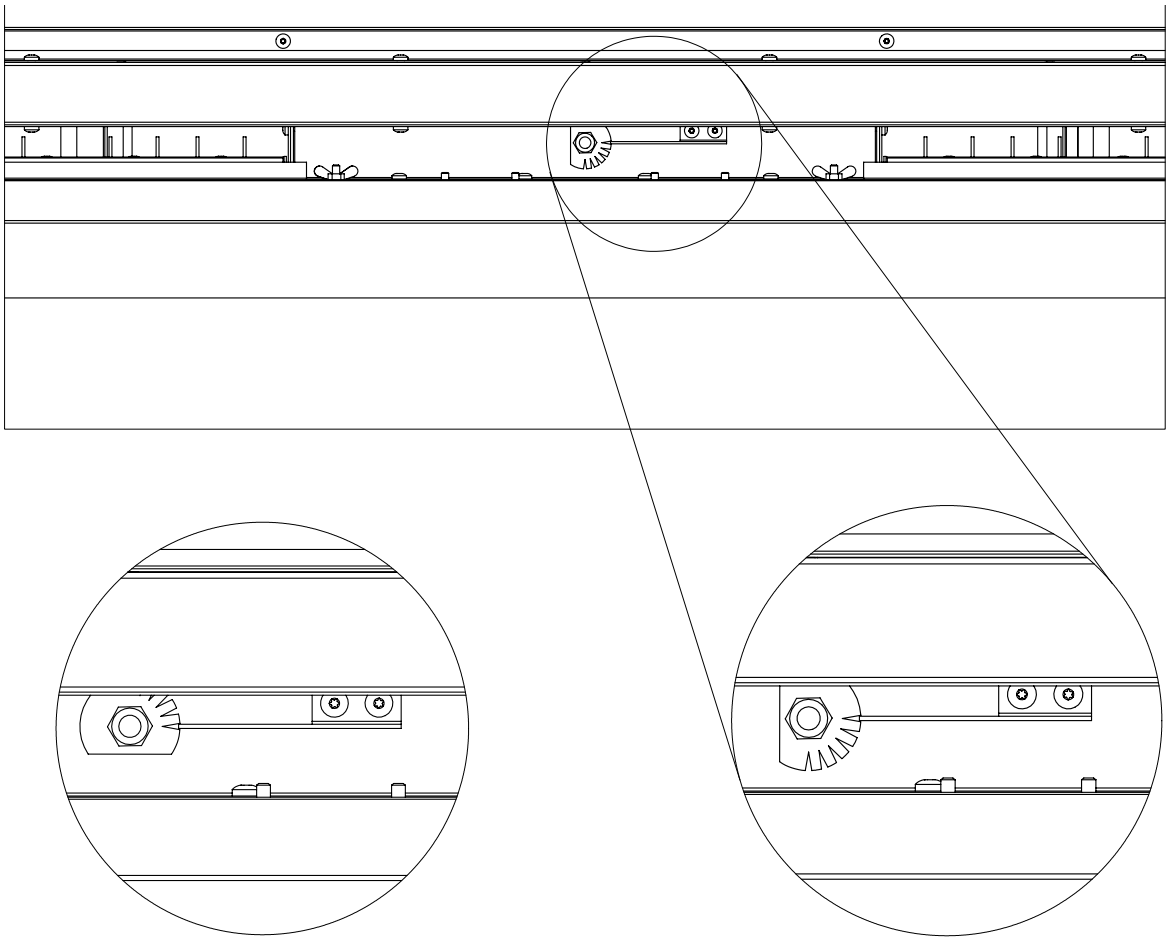

Figure 45. Restrictor Setting 6

Figure 46. Restrictor Setting 1

QUALIFIED INSTALLERS ONLY

HORIZONTAL TERMINATION:

1. **A minimum of 18"(NG) or 24"(LP) vertical rise before an elbow is required when horizontally terminating with an approved venting cap.**
2. **Horizontal pipes must not be level. For every 12" (305 mm) of horizontal travel there should be at least ¼" (6.4 mm) of vertical rise. Never allow the vent to run downward, as this could cause high temperatures or even present the possibility of a fire.**
3. The exterior of the horizontal vent termination must not be blocked or obstructed.
4. If the vent termination is not being attached to wood, the four wood screws provided should be replaced with material appropriate fasteners.
5. For buildings with vinyl siding, a vinyl standoff should be installed between the vent cap and the exterior wall. Attach the vinyl siding standoff to the horizontal termination. Note that the termination screws onto the flat portion of the standoff which provides an air space between the wall and the vent termination. The air gap prevents excessive heat from possibly melting the vinyl siding.
6. Horizontal pipes must be supported every **3' (914 mm)**. Plumber's "all round" strap will suffice.

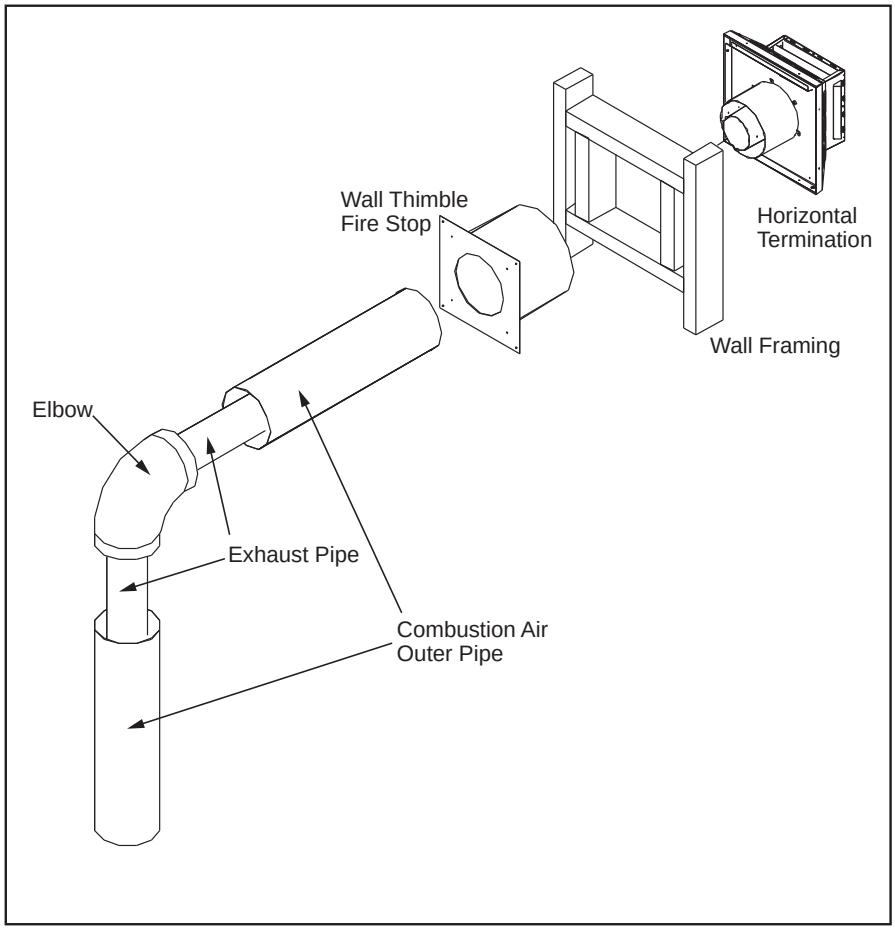

Figure 47. Horizontal Vent Termination

7. Ensure venting clearances are maintained, see Page 34 for details.

Step 1. Set the fireplace in the desired location. Check to determine if wall studs will be in the way when the venting system is attached. If this is the case, the location of the fireplace may have to be adjusted or the venting may have to be offset.

Step 2. Many direct vent pipe sections are designed with special twist-lock connections. Dry fit the desired combination of pipe and elbows to the appliance adaptor.

Step 3. With the pipe in the correct position and attached to the fireplace, mark the wall for a hole as directed by specified wall thimble dimensions. Cut and frame the hole in the exterior wall where the vent will be terminated. If the wall being penetrated is made of a non-combustible material (i.e. masonry or concrete) a minimum **7 1/2" (191mm)** hole is acceptable.

Step 4. The vent pipe must extend into the vent cap at least **1¼" (320 mm)**. Secure the connection between the vent cap and the pipe by attaching the two (2) sheet metal straps, which extend from the vent cap assembly to the outer wall of the vent pipe. Bend any remaining portion of the strap back towards the vent cap.

Step 5. Position the horizontal vent termination in the center of the thimble and attach to the exterior wall with the four screws provided. The arrow on the vent termination must be pointing up. Run a bead of high-temp silicone around the edges of the vent cap to make a seal with the wall. Ensure the proper clearances to combustibles have been maintained.

VERTICAL TERMINATION:

Step 1. Check "INITIAL INSTALLATION - VENTING CLEARANCES" for required clearances to combustibles when passing through ceilings, walls, roofs, enclosures, attic rafters, or other nearby combustible surfaces. Do not pack air spaces with insulation.

Step 2. Set the fireplace in the desired location. Drop a plumb bob down from the ceiling to the fireplace flue exit and mark the location where the vent will penetrate the ceiling. Drill a small hole at this point. Next, drop a plumb bob from the roof to the hole and mark the spot where the vent will penetrate the roof. Determine if ceiling joists, roof rafters, or other framing will obstruct the venting system. Relocate the fireplace or offset the venting to avoid cutting load bearing members.

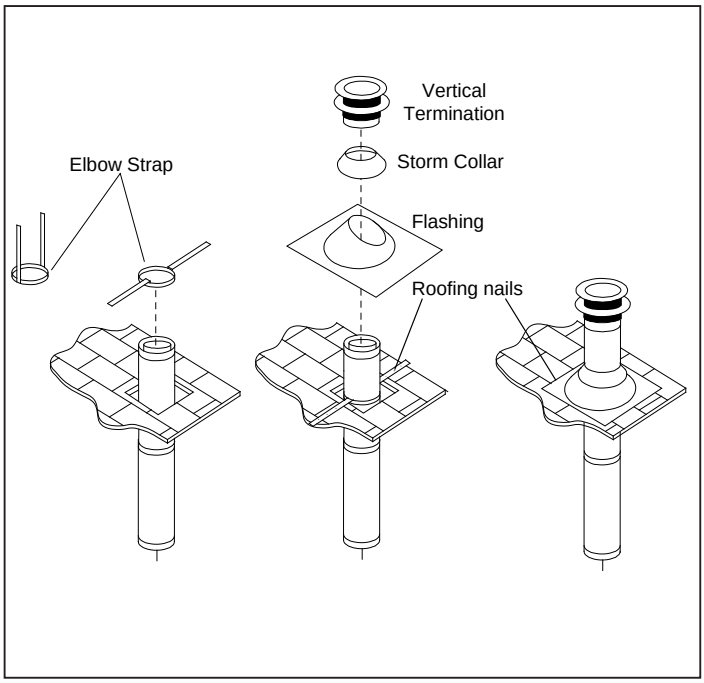

Figure 48. Vertical Vent Termination

Step 3. To determine the length of pipe required, measure room height, ceiling thickness, and vertical rise in an attic or second story. Firestops are required at each floor level beyond the first floor ceiling support/wall thimble cover or cathedral ceiling support box. If an offset is required to avoid obstructions, use a pair of 45 degree elbows. For proper support, use elbow straps with offsets. Use wall straps for long vertical runs. Attic insulation shield is required in attic.

Step 4. Measure roof pitch. Select the proper flashing and storm collar and determine the height above the roof (see Figure 47). A non-corrosive pipe material must be used for all exterior pipe lengths. Seal nail heads with silicone.

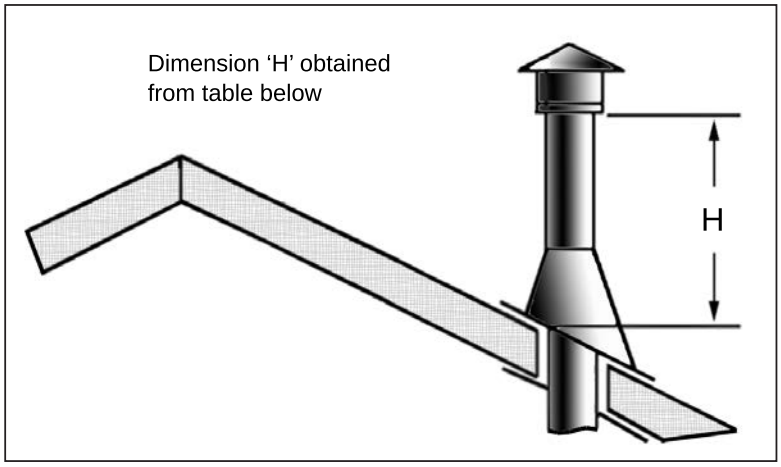

Figure 49: Height of Vertical Termination; Reference Table 7

Table 8: Minimum 'H' for Figure 49.

Roof Pitch	Minimum Height (H)	
	Feet	Meters
Flat to 7/12	1	0.3
Over 7/12 to 8/12	1.5	0.46
Over 8/12 to 9/12	2	0.61
Over 9/12 to 10/12	2.5	0.76
Over 10/12 to 11/12	3.25	0.99
Over 11/12 to 12/12	4	1.22
Over 12/12 to 14/12	5	1.52
Over 14/12 to 16/12	6	1.83
Over 16/12 to 18/12	7	2.13
Over 18/12 to 20/12	7.5	2.29
Over 20/12 to 21/12	8	2.44

NOTES:

1. If an offset is necessary in the attic to avoid obstructions, it is important to support the vent pipe every **3' (914 mm)** using wall straps to avoid excessive stress on the elbows.
2. Use 45° degree elbows instead of 90° degree elbows when ever possible. The 45° degree elbow offers less restriction to the flow of flue gases and intake air.

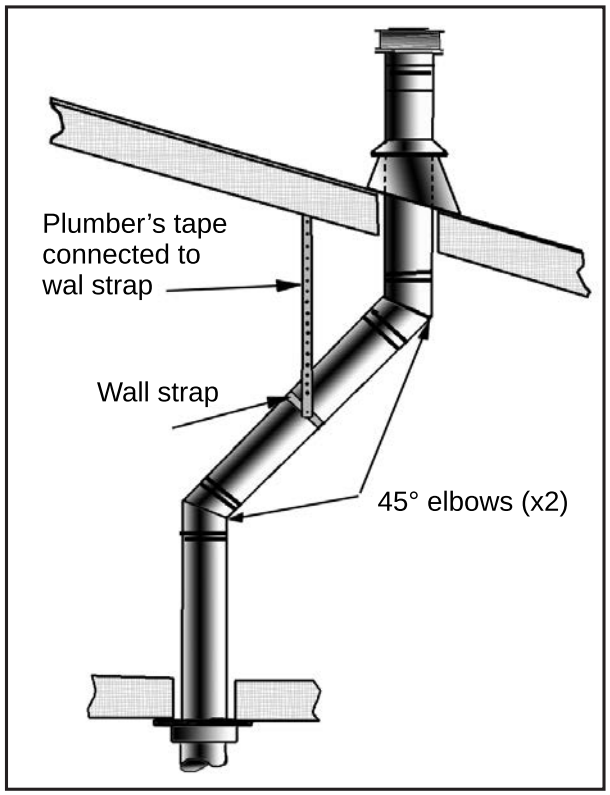

Figure 50: Multi-Story Vent Pipe Installation

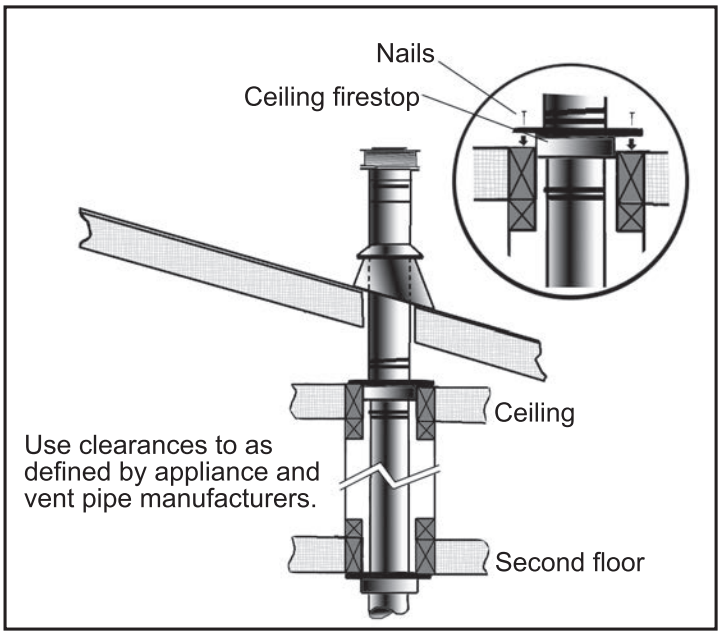

Figure 51: Use of Wall Straps.

Initial Installation

QUALIFIED INSTALLERS ONLY

Gas Line Connection and Testing:

WARNING: ONLY PERSONS LICENSED TO WORK WITH GAS PIPING MAY MAKE NECESSARY GAS CONNECTIONS TO THIS APPLIANCE.

- There is a 3/8 NPTM pipe located on the right side of the unit for the gas line connection. In Canada, consult your local authorities codes or the CAN/CGA B 149 (1 or 2) installation code. In the USA, gas installations follow either local codes or the current edition of the National Fuel Gas Code ANSI Z223.1.
- The efficiency rating of this appliance is a total thermal efficiency rating determined under continuous operating conditions and was determined independently of any installed system.

The appliance and its shutoff valves must be disconnected from the gas supply piping system during any pressure testing where the pressure exceeds ½ PSIG (3.45 KPa) or damage will occur to the valve.

The appliance must be isolated from the gas supply piping system by closing its individual manual shutoff valve during any pressure testing of the gas supply piping system at test pressures equal to or less than ½ psig (3.45 KPa).

Always check for gas leaks with a soap and water solution after completing the required pressure test.

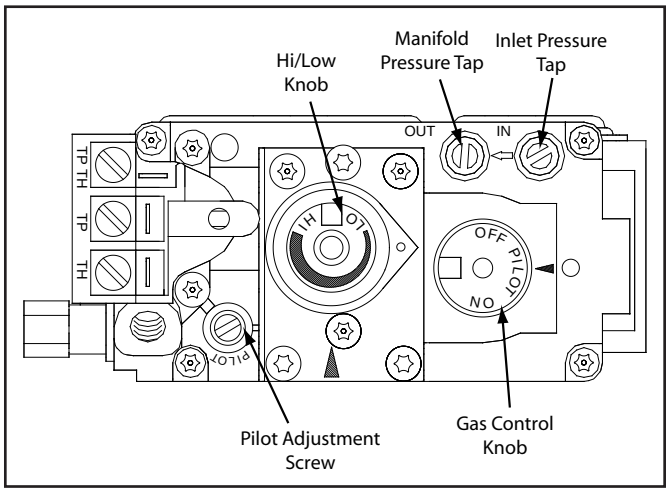

Figure 52: Labeled Gas Valve.

TO TEST VALVE PRESSURES

The pressure taps are located on the top right of the valve shown in Figure 52.

- Turn set screw 1 turn counter clockwise to loosen,
- Place **5/16" (8 mm)** I.D. hose over pressure tap system.
- Check pressures using a manometer.
- When finished, release pressure, remove hose & tighten set screw.

Table 9: G39G Pressure and BTU Information

G39G	Natural Gas	Propane Gas
Main Orifice	DMS: #36	DMS: #52
Manifold Pressure	3.6" W.C. (0.89 KPa)	10.0" W.C. (2.49 KPa)
Min. Manifold Pressure	1.6" W.C. (0.39 KPa)	6.4" W.C. (1.59 KPa)
Max Supply Pressure	7.0" W.C. (1.74 KPa)	11.0" W.C. (2.74KPa)
Min. Supply Pressure	4.5" W.C. (1.12 KPa)	10.4" W.C. (2.59 KPa)
Max BTU/hr Input	30,000 BTU/hr (8.94 kWh)	30,000 BTU/hr (8.94 kWh)
Min. BTU/hr Input	19,000 BTU/hr (5.57 kWh)	23,000 BTU/hr (6.74 kWh)

NEVER USE AN OPEN FLAME FOR LEAK TESTING.

QUALIFIED INSTALLERS ONLY

ELECTRICAL REQUIREMENTS:

WARNING: The fireplace must be electrically connected and grounded in accordance with local codes or, in the absence of local codes, with the current CSA C22.1 Canadian Electrical Code Part 1, Safety Standards For Electrical Installations, or The National Electrical Code ANSI / NFPA 70 in the US.

WARNING: Disconnect electrical power supply before working on receptacle wiring.

CAUTION: When servicing controls, label all wires prior to disconnection. Wiring errors can cause improper and dangerous operation. Verify proper operation after servicing. If any of the original wire supplied with the appliance must be replaced, it must be replaced with 18 AWG wire with a temperature rating of 105°C.

No external electricity is required to operate the fireplace. This model has a millivolt gas control system which uses the pilot flame to generate enough electricity to opeate the main burner. External electricity is only required to operate the convection fan. The electrical receptacle is located in the cabinet on the left side of the fireplace. Use a T-20 screwdriver to remove the mounting box from the outside of the cabinet. Remove the cover and receptacle to make appropriate connections. Use the steel strain relief to route the building power wires and use the plastic strain relief to route the wall switch/thermostat wires. Reinstall the wired receptacle box back into the cabinet and plug the fan back in.

WALL SWITCH OR THERMOSTAT:

WARNING: This stove must be wired to a wall switch or thermostat for safe and convenient operation.

This fireplace comes from the manufacture with an on/off switch mounted to the control panel (see Figure 4). Access is limited to the switch once unit is hot. Disconnect the connection behind the switch in the control panel and tap into the two (2) terminals (see Figure 53).

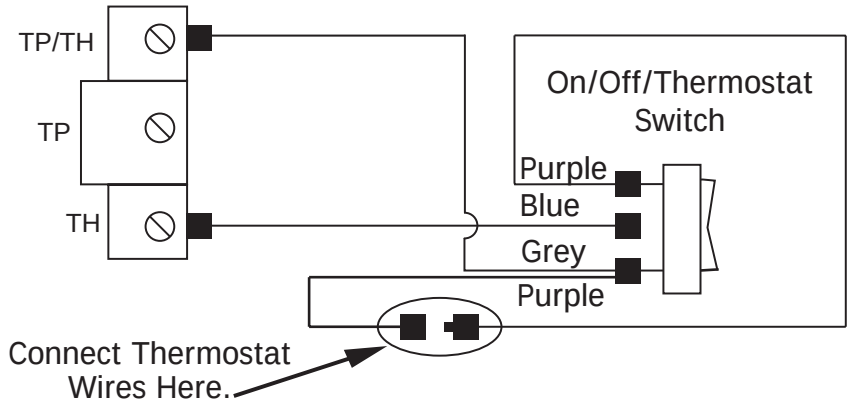

Figure 53: Burner Switch Wiring Diagram

Table 10: Recommended Thermostat Wire Size

Wire Size	Max. Length
14 gauge	100 ft (30.48 m)
16 gauge	60 ft (18.29 m)
18 gauge	40 ft (12.00 m)
20 gauge	25 ft (7.62 m)
22 gauge	18 ft (5.49 m)

QUALIFIED INSTALLERS ONLY

CONVECTION FAN WIRING

Use this wiring diagram to diagnose any problems relating to the convection fan circuit components.

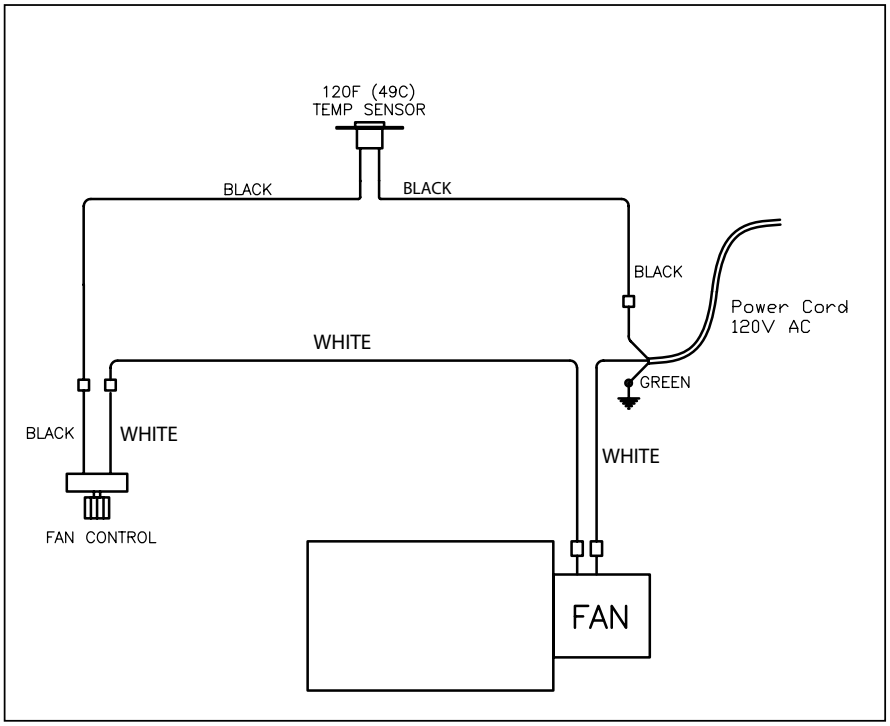

Figure 54: Convection Fan Wiring Diagram

GLASS MEDIA INSTALLATION:

Step 1. Remove surround panel and glass door (see "MAINTENANCE AND SERVICE" section).

Step 2. Spread the glass media provided out on the media tray. Create a thin and uniform layer over the tray bed. **Caution: Avoid excessive amount of media in front of the pilot.**

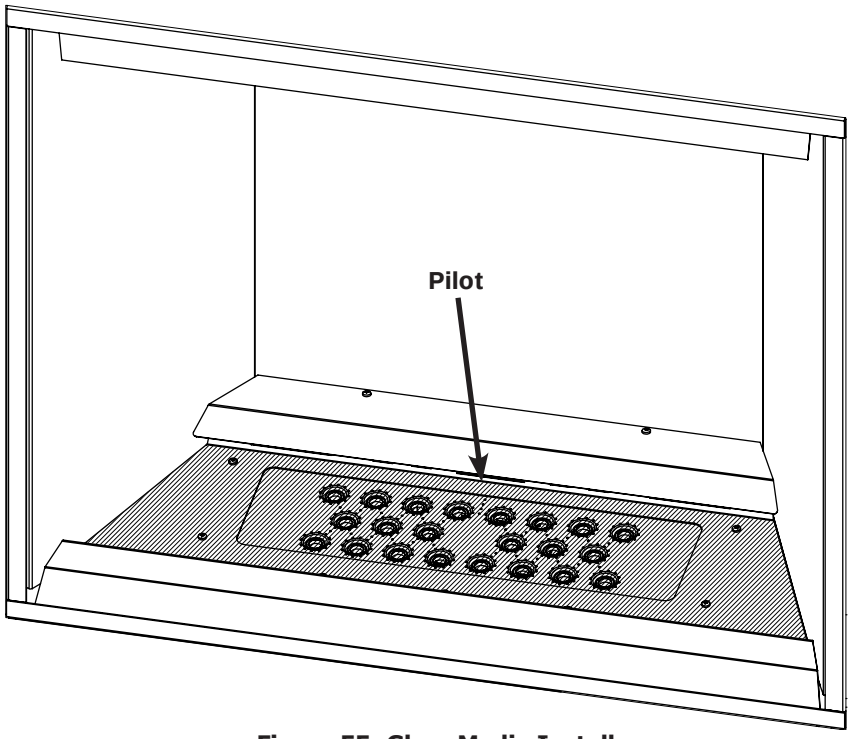

Figure 55: Glass Media Install

Table 11: Troubleshooting

Problem	Possible Cause	Solution
The main burner does not ignite when called for.	The gas valve may not be on.	• Check that the gas control knob is in the "ON" position.
	Thermostat is not calling for heat.	• Adjust the thermostat several degrees above ambient temperature.
	Problem with gas valve.	• Use a DC voltmeter to measure the voltage across the TPTH and TP terminals. Main operator voltage: Open circuit ≥ 325mV Closed circuit ≥ 100mV • If voltage is not present, check the control circuit for proper operation. • If proper control system voltage is present, replace the gas control.
Spark will not light the pilot after repeatedly pressing the spark ignitor.	Defective piezo ignitor.	• Check connections to ignitor. • If ignitor connections are good but no spark, replace ignitor.
	Broken spark electrode.	• Check for broken ceramic insulation, replace electrode if broken.
	Misaligned spark electrode.	• If spark is not arcing from electrode to pilot, loosen the screws on the pilot base adjust and tighten.
Pilot will not remain lit.	7-Day Shutdown	• The pilot has been in operation for 7 continuous days without main burner operation. Turn fireplace ON to reset pilot timer.
	Problem with thermocouple circuit.	• Check for proper connection of the thermocouple to the rear of the valve. If loose, fully tighten. • Check pilot for full flame impingement around thermocouple. If flame is too small, check gas pressure, adjust pilot rate screw, check pilot head for damage. • Check thermocouple voltage at valve. It must be greater than 5 mV. If low, replace thermocouple.
	Air in gas line (pilot dies while knob is depressed).	• Bleed line. • Check gas line pressure. • Contact dealer.
Burners will not remain lit.	Problem with thermopile circuit.	• Check gas line pressure . • Check for flame impingement on thermopile. If low, see "Pilot will not remain lit". • Check thermopile for minimum of 300 mV when burner is switched on. • Check wiring to thermostat for breaks.
Flame lifting	Leak in vent pipe	• Check for leaks in vent connections.
	Improper vent configuration	• Check vent configuration with manual.
	Terminal may be recirculating flue gases	• Check to see if terminal is on correctly. • May need to install high wind termination cap. • Contact dealer.
Glass fogs up	Normal Condition: after the appliance warms up the glass will clear. **Due to additives in gas, glass may get hazy during operation** Clean as needed.	
Blue Flames	Normal during start up: flames will yellow as the fireplace heats up.	
Flames are burning "dirty" or sooting	Flame impingement	• Check log positioning. • Increase primary air by opening the venturi shutter and/ or by opening the vent restrictor. See also "Burners will not remain lit."
Remote control doesn't work	Problem with the remote	• One or more of the batteries are dead. See remote control instructions.
	Problem with fireplace	• The on/off switch is turned to OFF. • The gas control valve is turned to PILOT or OFF. • The pilot has gone out.

Table 12: Parts List

Reference #	Part Description	Part #
1	Convection Fan Only	50-3577
2	Glass Burner Pan	50-3586
3	S.I.T 821 [7-Day] Nova Valve - Convertible	50-3660
4	G39 Safety Screen	50-3578
5	Pilot Assembly (PSE-NA479)	50-4083
6	G39 Door Complete (tempered)	50-3583
-	G39 Door Glass w/ Gasket ONLY (tempered)	50-3584
-	G39 Door Complete (ceramic)	50-3564
7	G39 Non-Combustible Board	50-3635
8	Piezo Ignitor	EC-023
9	Burner Switch	EC-026
10	Rheostat Fan Controller W/FS Knob	EC-045
11	120 Degree (F) Fan Temperature Sensor	EC-001
-	PVC Wire Clip	50-3614
12	Porcelain Liners	50-3498
14	Enamelled Glass Burner Tray	50-3637

Table 13: Options List

13	G39 Slim Face - Black Painted	50-3430
-	G39 Slim Face - Grey Powdercoat	50-3431
-	G39 Slim Face - Bronze Powdercoat	50-3537
-	G39 Slim Face - Silver Powdercoat	50-3432
-	G39 Slim Face - Nickel Plated	50-3570
-	G39 Slim Face - Copper Plated	50-3569
-	G39 Forgeworks Face - Midnite Bronze	50-3501
-	G39 Driftwood Log Set	50-3575
-	12 oz. Can of Metallic Black Touch Up Paint	PAINT-12-MB

Parts Diagram

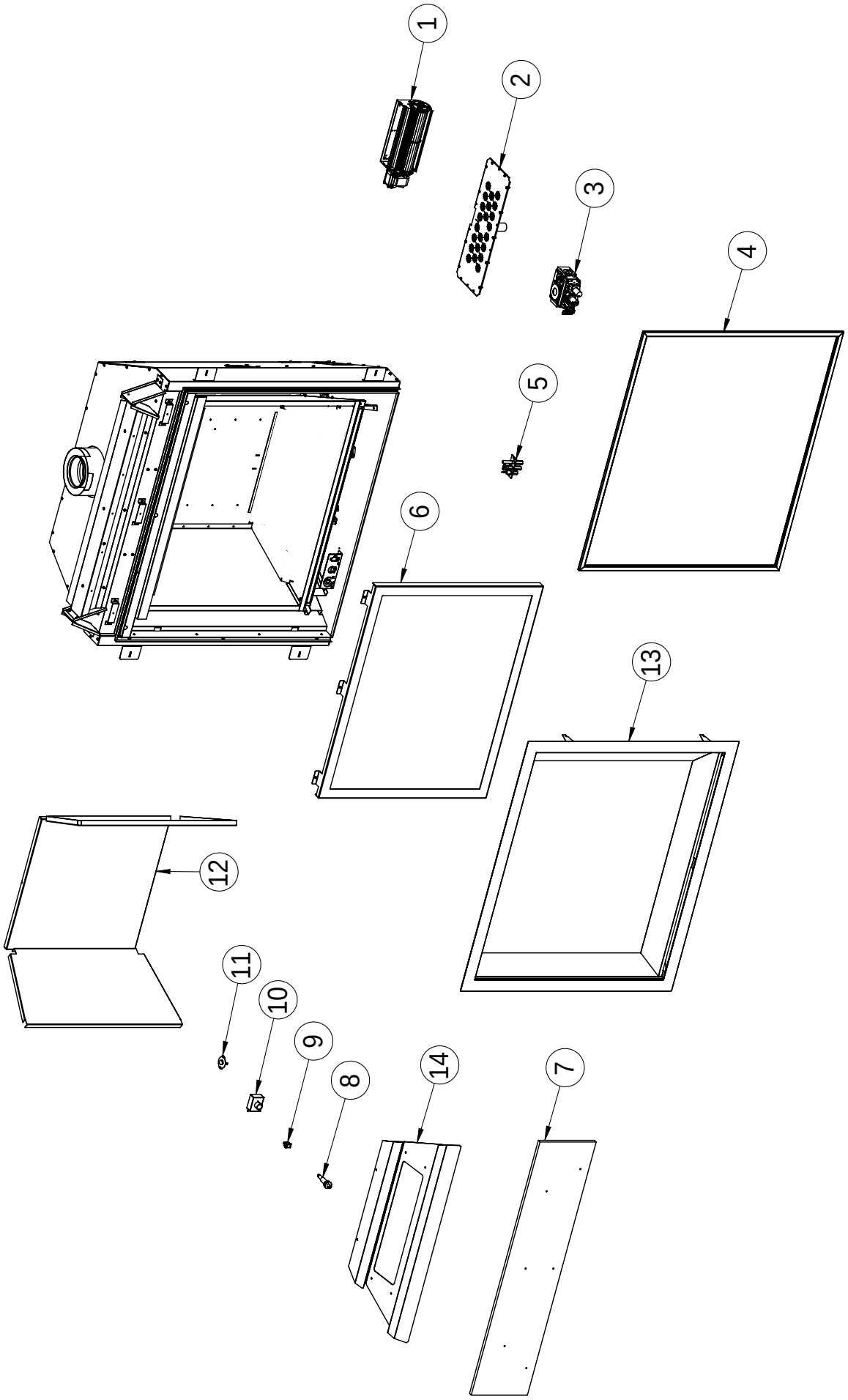

Notes

Warranty for Enviro **Gas** Products

Sherwood Industries Ltd. ("Sherwood") hereby warrants, subject to the terms and conditions herein set forth, this product against defects in material and workmanship during the specified warranty period starting from the date of original purchase at retail. In the event of a defect of material or workmanship during the specified warranty period, Sherwood reserves the right to make repairs or to assess the replacement of a defective product at Sherwood's factory. The shipping costs are to be paid by the consumer. All warranties by Sherwood are set forth herein and no claim shall be made against Sherwood on any oral warranty or representation.

Conditions

- A completed warranty registration must be submitted to Sherwood within 90 days of original purchase via the online warranty registration page or via the mail-in warranty registration card provided. Have the installer fill in the installation data sheet in the back of the manual for warranty and future reference.
- This warranty applies only to the original owner in the original location from date of install.
- The unit must have been properly installed by a qualified technician or installer, and must meet all local and national building code requirements.
- The warranty does not cover removal and re-installation costs.
- Sherwood Industries Ltd. reserves the right to make changes without notice.
- Sherwood Industries Ltd. and its employees or representatives will not assume any damages, either directly or indirectly caused by improper usage, operation, installation, servicing or maintenance of this appliance.
- A proof of original purchase must be provided by you or the dealer including serial number.
- This warranty does not cover any discoloration of the safety screen mesh.

Exclusions

An expanded list of exclusions is available at www.enviro.com/help/warranty.html

This warranty does not cover:

- Damage as a result of improper usage or abuse.
- Damage caused from over-firing due to incorrect setup or tampering.
- Damage caused by incorrect installation.

To the Dealer

- Provide name, address and telephone number of purchaser and date of purchase.
- Provide date of purchase. Name of installer and dealer. Serial number of the appliance. Nature of complaint, defects or malfunction, description and part # of any parts replaced.
- Pictures or return of damaged or defective product may be required.

To the Distributor

- Sign and verify that work and information are correct.

Sherwood Industries Ltd.
6782 Oldfield Road, Victoria, BC . Canada V8M 2A3
Online warranty registration: www.enviro.com/warranty/

Category	One Year	Two Year	Limited Lifetime (7yr)
Parts [1,2] (unit serial number required)		✔	
Firebox Liner Panels [3]		✔	
Firebox			✔
Heat Exchanger			✔
Burner			✔
Ceramic Logs [4]			✔
Ceramic Glass [5]	✔		
Pedestal / Legs (excluding finish)			✔
Door Assembly			✔
Surround Panels (excluding finish)			✔
Exterior Panels (excluding finish)			Up to 5 years
Electrical Components		✔	
Exterior Surface Finishing	✔		
Labour	✔		

[1] Whereas warranty has expired, replacement parts will be warrantied for 90 days from part purchase date. Labour not included. Unit serial number required.

[2] Westport Fan Kit covered for up to 5 years from purchase date. Labour not included. Unit serial required.

[3] Excluding damage to the finish caused by improper setup of the appliance, or color changes.

[4] Log set and panels excludes wear and tear or breakage caused by cleaning or service.

[4] Glass is covered for thermal breakage. Photos of box, inside of door, and unit serial # must be supplied for breakage due to shipping.

[6] Exterior Surface finishing covers plating, enamel or paint and excludes colour changes, chipping, and fingerprints.

Travel costs not included.

Installation Data Sheet

The following information must be recorded by the installer for warranty purposes and future reference.

NAME OF OWNER:

_____

ADDRESS:

_____

_____

_____

PHONE:_____

NAME OF DEALER:

_____

ADDRESS:

_____

_____

_____

PHONE:_____

MODEL:_____

SERIAL NUMBER:_____

DATE OF PURCHASE: _____ (dd/mm/yyyy)

DATE OF INSTALLATION:_____(dd/mm/yyyy)

☐ NATURAL GAS (NAT) ☐ PROPANE(LPG)

INLET GAS PRESSURE:_____in wc

MAIN BURNER ORIFICE:_____# DMS

PILOT ORIFICE #_____OR_____in diam.

INSTALLER'S SIGNATURE:

_____

NAME OF INSTALLER:

_____

ADDRESS:

_____

_____

_____

PHONE:_____

MANUFACTURED BY:
SHERWOOD INDUSTRIES LTD.
6782 OLDFIELD RD. SAANICHTON, BC, CANADA V8M 2A3
www.enviro.com
Summer 2021
C-15562