WARRANTY REGISTRATION
enviro.com/warranty

Enviro®

Q2L

DIRECT VENT FIREPLACE - NOVA

OWNER'S MANUAL



C ETL US LISTED
Intertek
C#4001609

WARNING: If the information in this manual is not followed exactly, a fire or explosion may result causing property damage, personal injury or loss of life. Installation and service must be performed by a qualified installer, service agency or the gas supplier.

Fr Version Française: www.enviro.com/fr.html

CERTIFIED TO: ANSI Z21.88-2017/CSA 2.33-2017 VENTED GAS FIREPLACE HEATERS
CSA 2.17-2017 GAS FIRED APPLIANCES FOR HIGH ALTITUDES

50-3054

Safety Precautions

WARNING:

FIRE OR EXPLOSION HAZARD

Failure to follow safety warnings exactly could result in serious injury, death, or property damage.

- Do not store or use gasoline or other flammable vapors and liquids in the vicinity of this or any other appliance.

- WHAT TO DO IF YOU SMELL GAS

- **Do not try to light any appliance.**
- **Do not touch any electrical switch; do not use any phone in your building.**
- **Leave the building immediately.**
- **Immediately call your gas supplier from a neighbor's phone. Follow the gas supplier's instructions.**
- **If you cannot reach your gas supplier, call the fire department.**

- Installation and service must be performed by a qualified installer, service agency or the gas supplier.

INSTALLER:
Leave this manual with the appliance.

CONSUMER:
Retain this manual for future reference.

This appliance may be installed in an after-market permanently located, manufactured (mobile) home, where not prohibited by local codes.

This appliance is only for use with the type of gas indicated on the rating plate. This appliance is not convertible for use with other gases, unless a certified kit is used.

Massachusetts installations (Warning): This product must be installed by a licensed plumber or gas fitter when installed within the Commonwealth of Massachusetts. Other Massachusetts code requirements: Flexible connector must not be longer than 36in., a shut off valve must be installed; only direct vent sealed combustion products are approved for bedrooms/bathrooms. A carbon monoxide detector is required in all rooms containing gas fired direct vent appliances. The fireplace damper must be removed or welded in the open position prior to installation of a fireplace insert.

Safety Precautions

FOR SAFE INSTALLATION AND OPERATION OF YOUR "ENVIRO" HEATER, PLEASE CAREFULLY READ THE FOLLOWING INFORMATION:

• All ENVIRO gas-fired appliances must be installed in accordance with their instructions. Carefully read all the instructions in this manual first. Consult the building authority having jurisdiction to determine the need for a permit prior to commencing the installation.

• **NOTE:** Failure to follow these instructions could cause a malfunction of the fireplace, which could result in death, serious bodily injury, and/or property damage.

• Failure to follow these instructions may also void your fire insurance and/or warranty.

GENERAL

• Installation and repair should be done by a qualified service person. The appliance should be inspected before the first use and, at least, annually by a qualified service person. More frequent cleaning may be required due to excessive lint from carpeting, bedding material, etc. It is imperative the control compartments, burners and circulating air passageways of the appliance be kept clean.

• Due to high temperatures, the appliance should be located out of high traffic areas and away from furniture and draperies.

Children and adults should be alerted to the hazards of high surface temperatures and should stay away to avoid burn or clothing ignition.

• Young children should be carefully supervised when in the same room as the appliance. Toddlers, young children and others may be susceptible to accidental contact burns. A physical barrier is required if there is a risk for individuals in the house. To restrict access to a fireplace or stove install an adjustable safety gate to keep toddlers, young children and other at risk individuals out of the room and away from hot surfaces. Any safety screen, guard, or barrier removed for servicing an appliance must be replaced prior to operating the appliance.

• Clothing or other flammable materials should not be placed on or near the appliance.

DANGER



HOT GLASS WILL CAUSE BURNS

DO NOT TOUCH GLASS UNTIL COOLED.

NEVER ALLOW CHILDREN TO TOUCH GLASS.

A barrier designed to reduce the risk of burns from the hot viewing glass is provided with this appliance and shall be installed for the protection of children and other at-risk individuals.

• A barrier designed to reduce the risk of burns from the hot viewing glass is provided with this appliance and shall be installed for the protection of children and other at-risk individuals. If the barrier becomes damaged, the barrier shall be replaced with the manufacturer's barrier for this appliance.

FOR YOUR SAFETY

• Installation and service must be performed by a qualified installer, service agency or gas supplier.

• This installation must conform to local codes or, in the absence of local codes, with the National Fuel Gas Code, ANSI Z223.1/NFPA 54, or the Natural Gas and Propane Installation Code, CSA B149.1.

• To prevent injury, do not allow anyone who is unfamiliar with the stove to operate it.

• To prevent injury, if the pilot or pilot and burners have gone out on their own, open the glass door and wait 5 minutes to air out before attempting to re-light the stove.

• Always keep the area around these appliances clear of combustible material, gasoline and other flammable liquids and vapours.

• These appliances should not be used as a drying rack for clothing or for hanging Christmas stockings/decorations.

• Due to the paint curing on the stove, a faint odor and slight smoking will likely be noticed when the stove is first used. Open a window until the smoking stops.

Always connect this gas stove to a vent system and vent to the outside of the building envelope. Never vent to another room or inside the building. Make sure the specified vent pipe is used, properly sized and of adequate height to provide sufficient draft. Inspect the venting system annually for blockage and signs of deterioration.

WARNING: Failure to position the parts in accordance with the diagrams in this booklet, or failure to use only parts specifically approved with this appliance, may result in property damage or personal injury.

WARNING: Do not operate with the glass front removed, cracked or broken. Replacement of the glass should be done by a licensed or qualified service person.

• Never use solid fuels such as wood, paper, cardboard, coal, or any flammable liquids, etc., in this appliance.

• Do not use this appliance if any part has been under water. Immediately call a qualified service technician to inspect the appliance and to replace any part of the control system or any gas control which has been under water.

• Do not abuse the glass by striking it or slamming the door shut.

• If the Q2L unit is pulled out of its installation, and the vent-air intake system is disconnected for any reason, ensure that the vent-air intake pipes are reconnected and re-sealed in accordance to the instructions noted in Initial Installation - Direct Vent

Table of Contents

Safety Precautions 2
Codes An 743mm29.1/4" 641mm25.1/4" 874mm34.3/8" d Approvals 5
Specifications 6
Dimensions 6
Rating Label & Lighting Instructions Location 6
Operating Instructions 7
Lighting and Turning Off Instructions 7
Pilot Light 8
Air Shutter (Venturi) 8
Remote controls (Optional) 8
Burner Lighting 9
Blower speed (Optional) 9
Normal Sounds During Operation 9
Maintenance And Service 10
Routine Maintenance 10
Cleaning The Glass 10
Cleaning The Firebox 10
Replacing the Glass 10
Cleaning Decorative Surfaces 11
Glass Door Removal 11
Burner Removal 12
Access Door 12
Fuel Conversion 13
Initial Installation 16
Introduction 16
Placement and Framing 16
Rear Vent Conversion 17
Corner Installation 18
Framing Plate Installation 19
Mantle & Non-Combustible Clearances 20
Direct Vent 21
Vent Termination Restrictions 22
Venting Clearances 23
Approved Venting Parts 24
Horizontal Termination - Rear Vent 25
Allowable Co-Axial Vent Configurations 26
Horizontal Termination 27
Exhaust Restrictor 28
Vertical Termination 29
Gas Line Connection and Testing 33
Electrical Requirements 34
Electrical Fan Requirements 35
Secondary Installation 36
Fan Kit Installation (Optional 50-2981) 36
Panel Installation (Optional) 37
Fire Grate and Log Set Installation 38
Troubleshooting 40
Parts List 41
Parts Diagram 42
Notes 43
Installation Data Sheet 46

Codes And Approvals

DIRECT VENT ONLY: This type is identified by the suffix DV. This appliance draws all of its air for combustion from outside the dwelling, through a specially designed vent pipe system.

This appliance has been tested and approved for installations from 0 feet to 4500 feet (1372 m) above sea level.

In the USA: The appliance may be installed at higher altitudes. Please refer to your American Gas Association guidelines which state: the sea level rated input of Gas Designed Appliances installed at elevations above 2000 (610 m) feet is to be reduced 4% for each 1000 feet (305 m) above sea level. Refer also to local authorities or codes which have jurisdiction in your area regarding the de-rate guidelines.

In Canada: When the appliance is installed at elevations above 4500 feet (1372 m), the certified high altitude rating shall be reduced at the rate of 4% for each additional 1000 feet (305 m).

- This appliance has been tested by INTERTEK and found to comply with the established VENTED GAS FIREPLACE HEATER standards in CANADA and the USA as follows:

VENTED GAS FIREPLACE HEATER (Q2L; NATURAL GAS, PROPANE GAS)

TESTED TO: ANSI Z21.88 CSA 2.33 VENTED GAS FIREPLACE HEATERS

CAN/CGA 2.17 GAS FIRED APPLIANCES FOR HIGH ALTITUDES

This ENVIRO Q2L Fireplace:

- Has been certified for use with either natural gas or propane (see rating label).
- Is not for use with solid fuels.
- Is approved for bedroom or bed sitting room. (**IN CANADA**: must be installed with a listed wall thermostat. **IN USA**: see current ANSI Z223.1 for installation instructions.)

- Must be installed in accordance with local codes. If none exist, use current installation code CAN/CGA B149 in Canada or ANSI Z223.1/NFPA 54 in the USA.
- Must be properly connected to an approved venting system and not connected to a chimney flue serving a separate solid-fuel burning appliance.

IMPORTANT NOTICE (Regarding first fire up): When the unit is turned on for the first time, it should be turned onto high without the fan on (if equipped) for the first 4 hours. This will cure the paint, logs, gasket material and other products used in the manufacturing process. It is advisable to open a window or door, as the unit will start to smoke and can irritate some people. After the unit has gone through the first burn, turn the unit off including the pilot, let the unit get cold then remove the glass door and clean it with a good gas fireplace glass cleaner, available at your local ENVIRO dealer.

NATIONAL FIREPLACE INSTITUTE

NFI

CERTIFIED

www.nficertified.org

We recommend that our gas hearth products be installed and serviced by professionals who are certified in the U.S. by the National Fireplace Institute® (NFI) as NFI Gas Specialists.

Specifications

Dimensions:

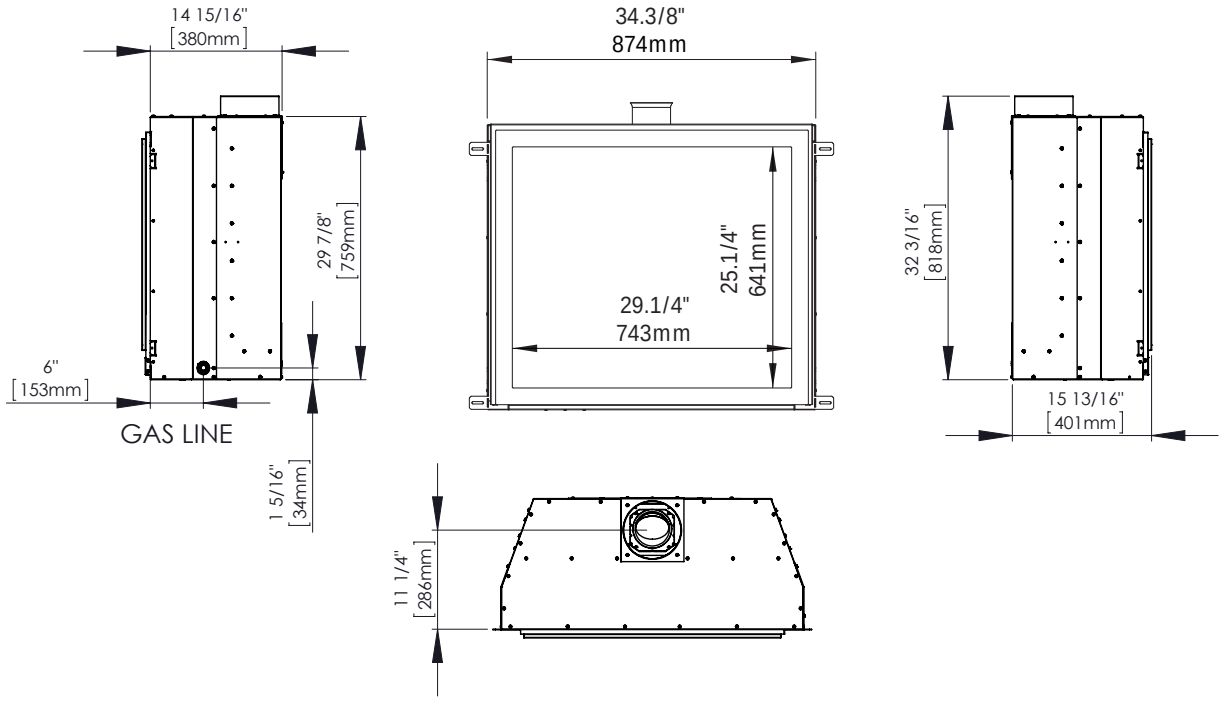

Figure 1. Q2L Dimensions - Top Vent

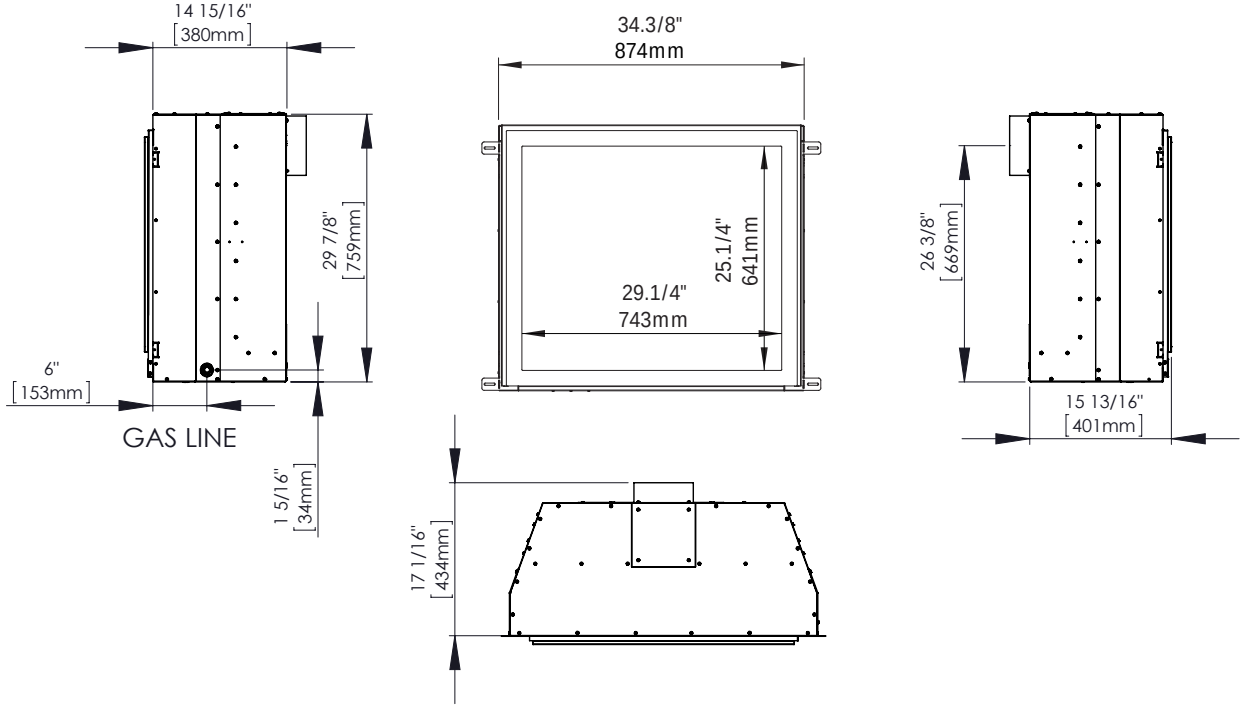

Figure 2. Q2L Dimensions - Rear Vent

Rating Label & Lighting Instructions Location:

To access the rating label and lighting instructions Remove face. The plates are attached to a length of chain and are never to be tampered with or removed. All important information for your fireplace is on this label as well of the model specific serial number which you will need for warranty information.

For Your Safety, Read Safety Precautions And Lighting Instructions Before Operating

WARNING: IF YOU DO NOT FOLLOW THESE INSTRUCTIONS EXACTLY A FIRE OR EXPLOSION MAY RESULT, CAUSING PROPERTY DAMAGE, PERSONAL INJURY OF LOSS OF LIFE.

LIGHTING AND TURNING OFF INSTRUCTIONS:

FOR YOUR SAFETY READ BEFORE LIGHTING

WARNING:If you do not follow these instructions exactly, a fire or explosion may result causing property damage, personal injury or loss of life

A. This appliance has a pilot which must be lighted by hand. When lighting the pilot, follow these instructions exactly.

B. BEFORE LIGHTING smell all around the appliance area for gas. Be sure to smell next to the floor because some gas is heavier than air and will settle on the floor.

WHAT TO DO IF YOU SMELL GAS:
Do not try to light any appliance. Do not touch any electrical switch; do not use any phone in your building. Immediately call your gas supplier from a neighbor's phone. Follow the gas supplier's instructions. If you cannot reach your gas supplier, call the fire department.

C. Use only your hand to push in or turn the gas control knob. Never use tools. If the knob will not push in or turn by hand, don't try to repair it. Call a qualified service technician. Force or attempted repair may result in a fire or explosion.

D. Do not use this appliance if any part has been under water. Immediately call a qualified service technician to inspect the appliance and to replace any part of the control system and any gas control which has been under water.

LIGHTING INSTRUCTIONS

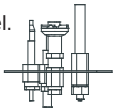

1. STOP! Read the safety information above on this label.
2. Set the thermostat to the lowest setting.
3. Turn off all electric power to this appliance.
4. Open the front control panel.
5. Turn off the gas control knob clockwise ↷ to the "OFF" position.
6. Open door. Wait fIve (5) minutes to clear out any gas. Close door. Then smell for gas, including near the floor. If you smell gas, STOP! Follow "B" in the saftey information above on this label. If you don't smell gas, go to the next step.
7. Find pilot-located near the center rear of the firebox. Turn the gas control knob counter-clockwise ↶ to "PILOT". Push the gas control in fully and hold, keep knob depressed for about 30 seconds after the pilot is lit. Release knob. If pilot goes out, repeat steps 4 through 5.

WARNING: This gas valve has a lockout device, which will not allow the pilot burner to be relit until the thermocouple has cooled.

-If the knob does not pop up when released, stop and immediately call your service technician or gas supplier.

-If the pilot will not stay lit after several tries, turn the gas control knob clockwise ↷ to "OFF" and call your service technician or gas supplier.

8. Turn the gas control knob counter clockwise ↶ to the "ON" position. Flip the burner switch to "ON" then turn the "HI/LOW" knob to the desired setting.
9. Close the front control panel.
10. Turn on all electric power to the appliance.
11. Set thermostat to desired setting.

TO TURN OFF GAS TO APPLIANCE

1. Set the thermostat to the lowest setting.
2. Turn off all electric power to the appliance if service is to be performed.
3. Open the front control panel and flip burner switch to "OFF"
4. Turn the gas control knob clockwise ↷ to the "OFF" position.
5. Close the front control panel.

C-12454

Figure 3. Lighting Instruction Label

Operating Instructions

Pilot Light:

1. Turn off the gas to the fireplace. **If not recently done, remove the glass and let the unit air out for at least five (5) minutes to clear out any gas.** Turn on gas to the heater. Leak test all joints with soapy water. **NEVER USE OPEN FLAME FOR LEAK TESTING.**
2. Start the pilot by pressing the gas control knob and turning it to PILOT. While holding the gas control knob in, press the piezo ignitor several times until the pilot light starts. Hold the gas control knob in for 30 seconds. Check that the pilot has fully engulfed the thermocouple assembly (see Figure 4).
3. Start the main burner by turning the gas control knob to ON and then turn the rocker switch to ON. Check that all burner ports have flame.
4. Leak test all gas joints again.

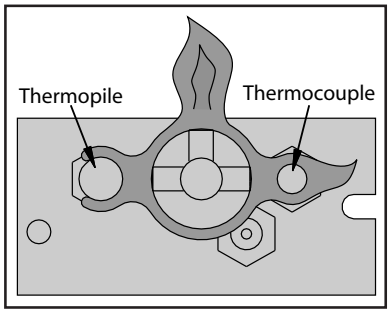

Figure 4. Pilot Flame

Air Shutter (Venturi):

The air shutter adjustment lever is underneath the firebox (see Figure 5).

The air shutter allows the amount of air mixing with the incoming gas to be adjusted in order to accommodate different climates and venting arrangements. Start the pilot and then the burner. Make sure the pilot flame is burning normally and none of the burner ports are plugged. Let the fireplace burn for roughly fifteen minutes and then examine the flames for impingement or soot build up.

The ideal flame will be blue at the base and light orange above. The flames should be of medium height. If the flames look like this, no venturi adjustment is needed. If the flames are fairly short and mostly blue, the fireplace is getting too much air. Therefore, the air shutter should be closed (pushed it) slightly until the correct flames are achieved. Flames that are very orange, with tall, dark, stringy tips, are not getting enough air. Open the venturi until the flames clean up. If the venturi is opened, or closed all the way, and the correct flames cannot be attained, turn off the gas and contact the dealer.

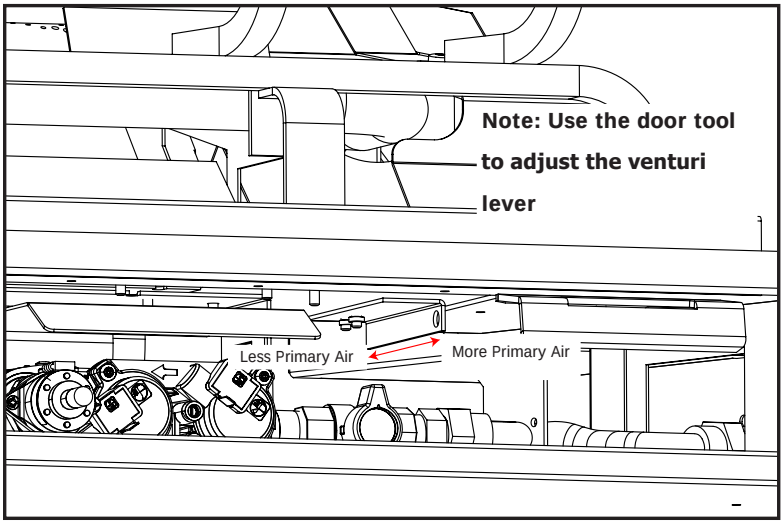

Figure 5. Air shutter adjustment lever

Warning: Incorrect venturi adjustment may lead to improper combustion, which is a safety hazard. Contact the dealer if there is any concern about the venturi adjustment.

Remote controls (Optional):

This fireplace can use an optional remote control or an optional cordless wall thermostat. If either of these are to be used to control the fireplace for the majority of the time, leave the ON/OFF switch (on the control panel) in the remote/thermostat position. Consult the instructions included with the remote/wall thermostat for operation guidelines.

For Your Safety, Read Safety Precautions And Lighting Instructions Before Operating

Burner Lighting:

A) Make sure the pilot is lit.
B) Turn gas control knob COUNTER CLOCKWISE to ON.
C) Flip the burner switch to ON.
D) Turn HI/LO knob to the desired flame height.

NOTE: Check that all burner holes are lit.

TO TURN GAS FIREPLACE OFF:

Flip switch to OFF to turn off burners only and turn the gas control knob to off to extinguish the pilot flame. Keep the pilot flame **OFF** when not in use. If the fireplace is to be serviced, turn the gas shut off valve to OFF (DO NOT FORCE IT) and disconnect all electrical power sources. See Figure 6 for control panel layout.

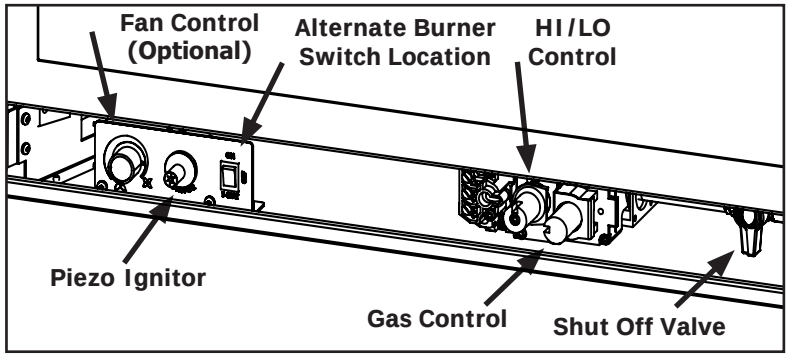

Figure 6. Control Panel

NOTE: When the unit is turned on for the first time, it should be turned onto high, with the fan OFF (if equipped), for the first two to four hours. This will cure the paint, logs, gasket material, and other products used in the manufacturing process. It is advised that a door or window be opened as the unit will start to smoke, which can irritate some people. After the unit has gone through the first burn, turn the unit OFF, including the pilot, and let the unit get completely cold. Then remove the glass and clean it with a good gas fireplace glass cleaner, available at your local Enviro dealer. See "Maintenance And Service; Glass Door Removal" and "Maintenance And Service; Cleaning The Glass."

Blower speed (Optional):

The blower will come on only when the fireplace is up to temperature (approximately 15 minutes). The speed of the fan can be changed by turning the fan control knob. The blower will continue to operate automatically after the unit has been shut off (approximately 25 minutes).To turn the blower off, turn the knob COUNTER CLOCKWISE until it "clicks" off (Figure 7).

It is advisable not to operate the blower below 1/3 speed as it puts a strain on the windings of the blower and running the blower at lower speeds could also cause premature fan failure.

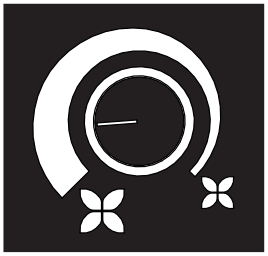

Figure 7. Fan Control

Normal Sounds During Operation:

Table 1: Normal Sounds

Component	Normal Sound Description
Q2 Cabinet	Creaking when heating up or cooling down caused by thermal expansion
Burner	Light pop or poof when turned off
Temperature Sensor	Clinking when it senses to turn the blower on or off
Pilot Flame	Quiet whisper while the pilot flame in on
Blower / Fan	Air movement that increase and decreases with the speed of the blower
Gas Control Valve	Dull click when turning on or off, this is the valve opening and closing

Maintenance And Service

Routine Maintenance:

At least once a year, run through the following procedures to ensure the system is clean and working properly. Check the burner to see if all the ports are clear and clean. Check the pilot to make sure it is not blocked by anything. The pilot flame should be blue with little or no yellow on the tips.

Warning: Clearances must be sufficient to allow access for maintenance and service

Warning: Failure to position the parts in accordance with this manual, or failure to use only parts specifically approved with this appliance may result in property damage or personal injury.

The venting system must be periodically examined; it is recommended the examination is done by a qualified agency.

Cleaning The Glass:

When the fireplace has cooled, remove the face of the fireplace along with the glass. See Maintenance And Service - Glass Door Removal. Check the gasket material on the back of the glass, making sure that it is attached and intact.

During a cold start up, condensation will sometimes form on the glass. This is a normal condition with all fireplaces. However, this condensation can allow dust and lint to cling to the glass surface. Initial paint curing of the appliance can leave a slight film behind the glass, a temporary problem. The glass will need cleaning about two weeks after installation. **Use a mild glass cleaner and a soft cloth**. **Abrasive cleaners will damage the glass and painted surfaces.** Depending on the amount of use, the glass should require cleaning no more than two or three times a season. **Do not clean the glass when it is hot.**

Cleaning The Firebox:

Remove the logs carefully, as they are very fragile. Gently remove all the coals and place on a paper towel. Vacuum the bottom of the firebox thoroughly. Carefully clean any dust off the logs and remove any lint from the burner and pilot. At this time, inspect the burner tube for cracking or severe warping. If a problem is suspected, contact the dealer. Check the logs for deterioration or large amounts of soot; a small amount on the bottom side of the logs is normal. Replace the logs and coals as in the Secondary Installation - Fire Grate and Log Set Installation section. If new/more coals are required, contact your nearest ENVIRO dealer.

Replacing the Glass:

The glass in the fireplace is a high temperature ceramic. If the glass is damaged in any way, a factory replacement is required (see Parts List). Wear gloves when handling damaged glass door assembly to prevent personal injury. Do not operate with the glass front removed, cracked or broken. Removal and replacement of the glass from the door **must** be done by a licensed or qualified service person. **The glass must be purchased from an ENVIRO dealer. No substitute materials are allowed.** Remove the door (see page 11). The replacement glass will come with a new gasket installed. Remove any silicone remnants from the door. Apply high temperature silicone to the two vertical faces of the door and install the new piece of glass with gasket (be sure to maintain edge clearances). Apply even pressure to the glass to allow the silicone to adhere to the gasket material.

Maintenance And Service

Cleaning Decorative Surfaces:

Painted and porcelain faces should be wiped with a damp cloth periodically. If a plated face has been purchased, it should be unpacked/unwrapped carefully to avoid getting anything on the surface of the finish, including cleaners, polish and finger prints. It is important to note that fingerprints and other marks can leave a permanent stain on plated finishes. **To avoid this, give the face a quick wipe with denatured alcohol on a soft cloth BEFORE lighting the fireplace.** Never clean the face when it is hot. Do not use other cleaners as they may leave a residue, which can become permanently etched into the surface.

Glass Door Removal: (Q2G Unit Shown)

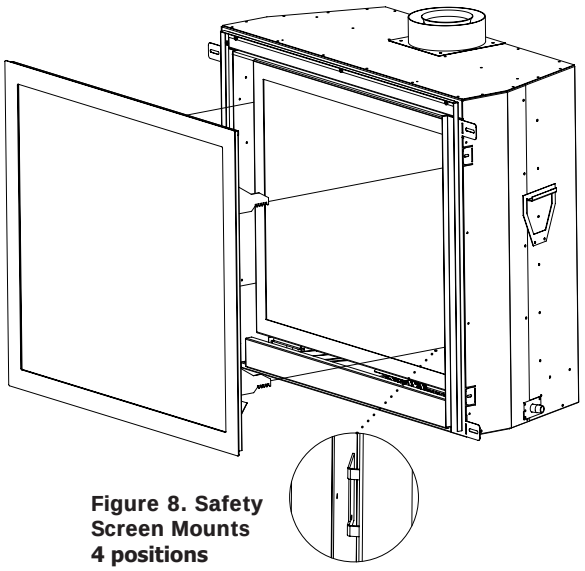

Figure 8. Safety Screen Mounts 4 positions

The door will occasionally need to be removed for installation of media, and cleaning of the Glass.

Step 1. First remove the safety screen by grabbing the top and bottom of the frame and lifting it up and out.

Step 2. To remove the glass door use your two index fingers to pull the spring latches up over the two door tabs. Fig.9A

Step 3. Once released, pivot the door forward and pull it out of the bottom door retainers. The door must be angled in order for it to pull out. Fig.9B

To replace the glass door, simply reverse the above procedure.

WARNING: Do not touch or attempt to remove the glass door if the fireplace is not completely cold.

WARNING: Never operate the fireplace without the glass door

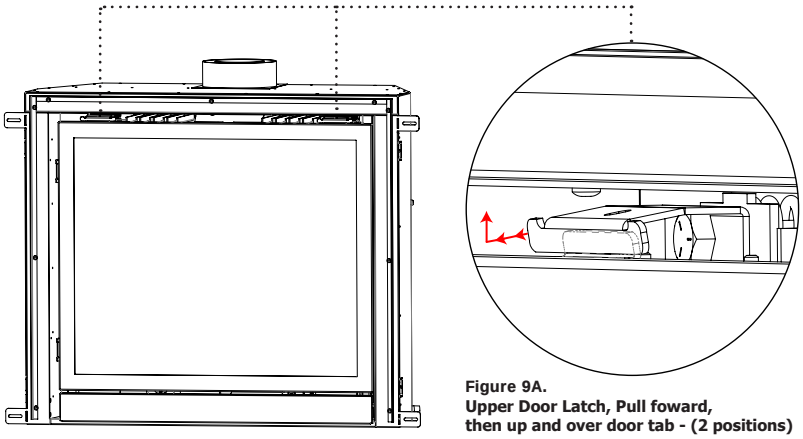

Figure 9A.
Upper Door Latch, Pull foward, then up and over door tab - (2 positions)

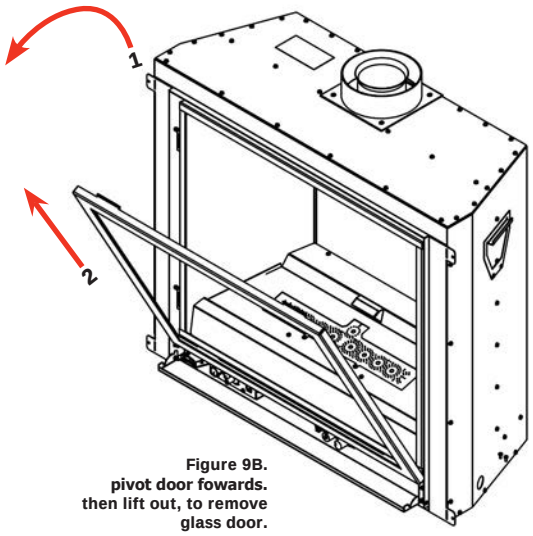

Figure 9B.
pivot door fowards. then lift out, to remove glass door.

BURNER REMOVAL:

The burner may need to be removed for a few reasons, including cleaning under the burner or to be replaced all together. **Proceed only when the unit has completely cooled down.**

Step 1: Remove the glass door as shown in the Maintenance and Service - Glass Door Removal.

Step 2: Remove the log set and fire grate as shown in Secondary Installation - Fire Grate and Log Set Installaion

Step 3: Pull the burner up and then out of the venturi box and out.

To re-install the burner follow steps 1-3 in reverse. When placing the burner back in the unit be sure not to move the air shutter. Insure the front and rear lengths of the burner tube are parallel as it may have distorted with heat over time. The ideal placement for the burner tube is keeping it forward up against the burner stand

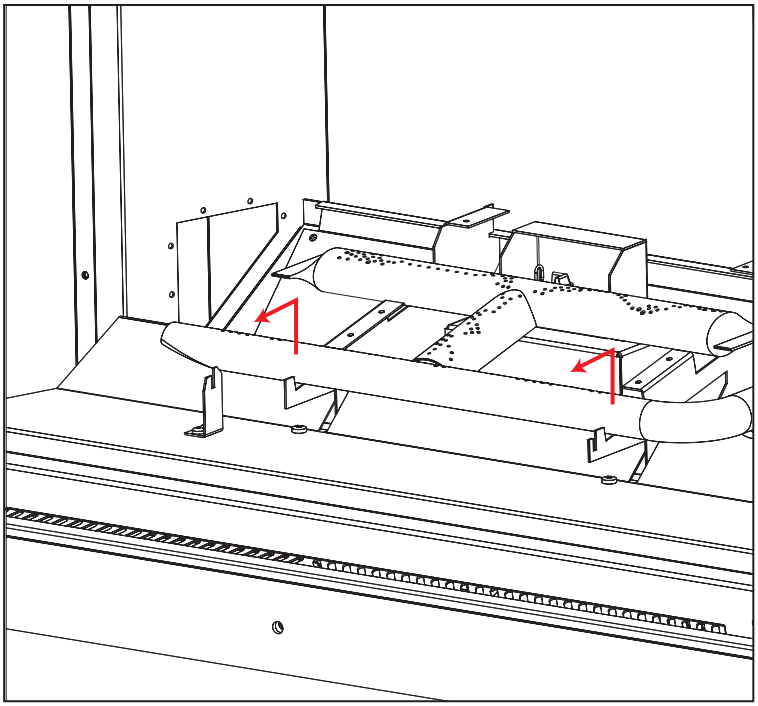

Figure 10. Removing Burner

ACCESS DOOR:

There is an access door in the bottom on the firebox that is used for servicing components after the unit is installed in a construction enclosure. **Proceed only when the unit has completely cooled down.**

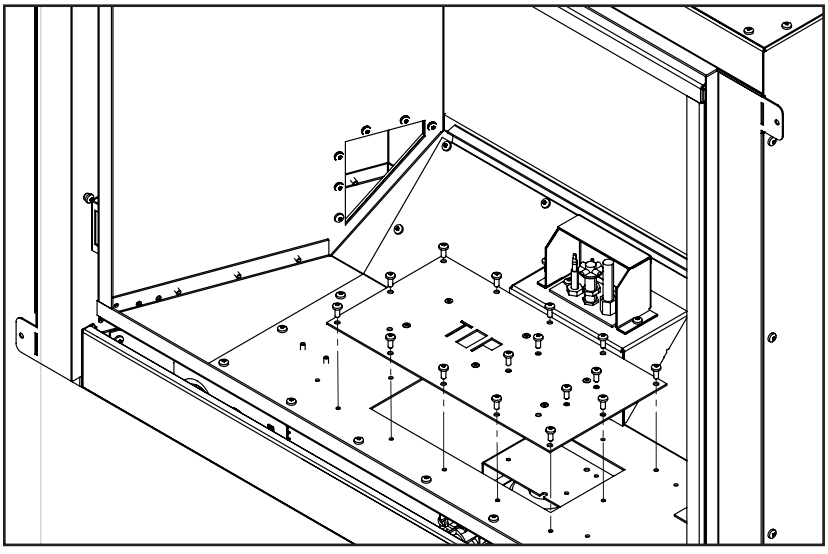

Figure 11. Removing Access Door

Step 1: Remove the burner as shown in the MAINTENANCE AND SERVICE - BURNER REMOVAL.

Step 2: Remove the Upper Air Diverter by removing (2) T-20 bolts. Remove the Lower Air Diverter.

Step 3: Remove the right and left burner stands by removing (4) T-20 bolts.

Step 4: Remove the (16) T-20 bolts retaining the access door as shown in Figure 11.

Step 5: After serviving assemble in the reverse order and be sure the gasket is still intact. Replace if necessary.

FUEL CONVERSION:

TO BE INSTALLED BY A QUALIFIED SERVICE AGENCY ONLY

Please read and understand these instructions before installing.

Warning: This conversion kit shall be installed by a qualified service agency in accordance with the manufacturer's instructions and all applicable codes and requirements of the authority having jurisdiction. If the information in these instructions is not followed exactly, a fire, explosion or production of carbon monoxide may result causing property damage, personal injury or loss of life. The qualified service agency is responsible for the proper installation of this kit. The installation is not proper or complete until the operation of the converted appliance is checked as specified in the manufacturer's instructions supplied with the kit.

Kit Parts List for all Q2 Models:

1 - Orifice (NG - #40 DMS or LP - #55 DMS) as marked
1 - Pilot Injector (NG 0.62 mm; LP 0.35 mm) as marked
1 - Installation instruction sheet
1 - Conversion label

Carefully inspect all parts supplied with this conversion kit. If any parts have been damaged or are missing, contact your dealer, distributor or courier company to have them replaced before starting this installation.

MODEL: Q2G; Q2L

THIS APPLIANCE WAS CONVERTED ON:_____DD/MM/YYYY
TO (LPG) PROPANE WITH KIT NO. 50-3035
BY:_____
(NAME AND ADDRESS OF ORGANIZATION MAKING THIS CONVERSION),
WHICH ACCEPTS REPONSIBILITY THAT THIS CONVERSION HAS BEEN
PROPERLY MADE.

Max Input: 20,000 Btu/hr (5.86KWh) at 10" WC. (2.49 KPa) Manifold press
Min. Input: 16,000 Btu/hr (4.69KWh) at 6.4" WC. (1.60 KPa) Manifold press.
Max supply press: 11.0"WC (2.74 KPa) Min press: 10.4"WC (2.59 KPa)

Conversion Kit Installation:

1. Turn control knob on the gas valve to the "OFF" position and shut the gas supply off at the shut-off valve upstream of the unit. CAUTION: The gas supply must be shut off prior to disconnecting the electrical power and before proceeding with the conversion. Allow the valve and unit to cool down to room temperature.
2. Remove the glass door as shown in the MAINTENANCE AND SERVICE - GLASS DOOR REMOVAL.
3. Carefully remove the ceramic log set.
4. Remove the burner as shown in the MAINTENANCE AND SERVICE - BURNER REMOVAL.
5. Convert the burner orifice(s):
   a) Remove the main burner orifice with a ½ inch deep socket.
   b) Put a bead of pipe-thread sealant or approved Teflon tape on the orifice threads before installing into the brass elbow.
   c) Install the new orifice(s) from the kit into the brass elbow.
6. Convert the pilot injector:
   a) Pull the pilot hood straight up to access the pilot injector.
   b) Using a 5/32" or 4 mm Allen key, remove the pilot injector.
   c) Install the new pilot injector supplied with this conversion kit. Simply screw the new injector inside the pilot hood using the Allen key,
   d) Reinstall the hood by placing the hood on the assembly, line up the key way, and snap into place.
7. Convert the SIT gas valve:

a) Remove the black protection cap from the HI/LO knob by hand shown in Figure A.

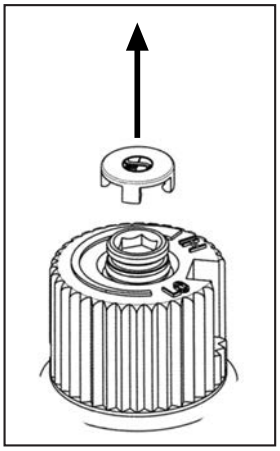

Figure A. Removing valve cap.

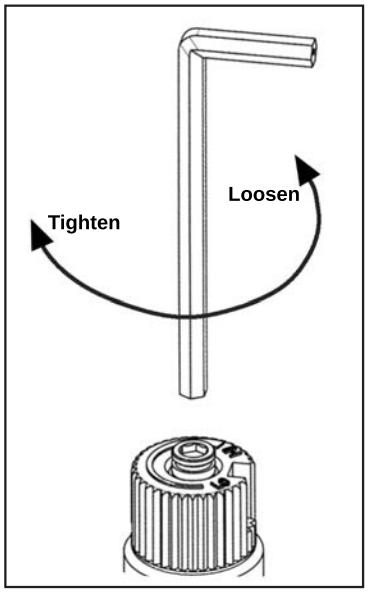

Figure B. Removing valve screw.

b) Insert a 5/32" or 4 mm Allen wrench into the hexagonal key-way of the screw (see Figure B), rotate it counter-clockwise until it is free and extract it.

c) Check that the screw is clean and if necessary remove dirt.

d) Flip the screw (refer to Figure C).

e) Using the Allen wrench as shown in Figure B, rotate the screw clockwise until a torque of 9 inch lbs. **WARNING!** Do not over tighten the screw. It is recommended that you grip the wrench by the short side.

f) Verify that if the conversion is from NG to LPG, the screw must be re-assembled with the red o-ring visible (refer to Figure D). If the conversion is from LPG to NG, the red o-ring of the screw must be not visible.

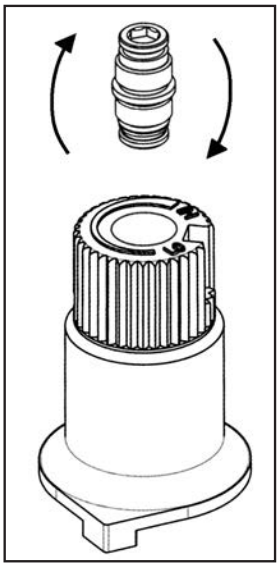

Figure C. Flip valve screw.

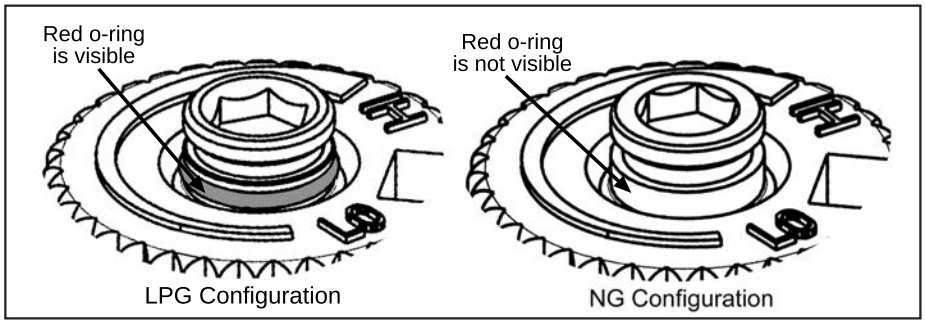

Figure D. O-ring on valve screw.

g) Re-attach the black protection cap that was removed in step a (Figure A).

8. Reinstall the air diverters, burner tube, grate, and the ceramic log set as indicated in this manual.
9. Reconnect the main gas line if it was disconnected and open the shut-off valve at the gas line to the unit.
10. Use a small brush to apply a warm soapy water solution to all gas connections (use a half dish soap and half warm water). If a gas leak is present, bubbling will occur. Gas leaks can be repaired by using an approved pipe thread sealant or approved Teflon tape. NEVER USE AN OPEN FLAME WHEN TESTING FOR LEAKS.
11. Reconnect the electrical power to the unit.
12. Relight the pilot and confirm the flame properly covers both the thermocouple and thermopile (see Figure 4, page 8). Should the pilot require adjustment, turn the adjustment screw (figure 30, page 30) clockwise to decrease or counterclockwise to increase until the correct flame is achieved.
13. Relight the main burner in both the "HI" and "LO" positions to verify proper burner ignition, operation and proper flame appearance. Confirm the inlet and manifold pressures are within the acceptable ranges as directed in section INTIAL INTALLATION - GAS LINE CONNECTION AND TESTING. If the Q2 has been installed at an altitude higher than 2000ft (610m) it is required to de-rate the unit accordingly:

In the USA: The appliance may be installed at higher altitudes. Please refer to your American Gas Association guidelines which state: the sea level rated input of Gas Designed Appliances installed at elevations above 2000 (610 m) feet is to be reduced 4% for each 1000 feet (305 m) above sea level. Refer also to local authorities or codes which have jurisdiction in your area regarding the de-rate guidelines.

In Canada: When the appliance is installed at elevations above 4500 feet (1372 m), the certified high altitude rating shall be reduced at the rate of 4% for each additional 1000 feet (305 m).

14. MAKE SURE that the conversion label is installed on or close to the rating label to signify that the unit has been converted to a different fuel type.

Initial Installation

QUALIFIED INSTALLERS ONLY

Introduction:

This section of the owner's manual is for the use of qualified technicians only. Fireplace placement, hearths, facing, mantels, and venting terminations will be covered, as well as the gas and electric systems. There are several installation safety guidelines that must be adhered to. Please carefully read the safety precautions at the front of this manual.

NOTE: The Q2G models can ONLY be run as a top vent; the rear vent is only available for the Q2L models.

CAUTION: Clearances must be sufficient to allow access for maintenance and service.

Placement and Framing:

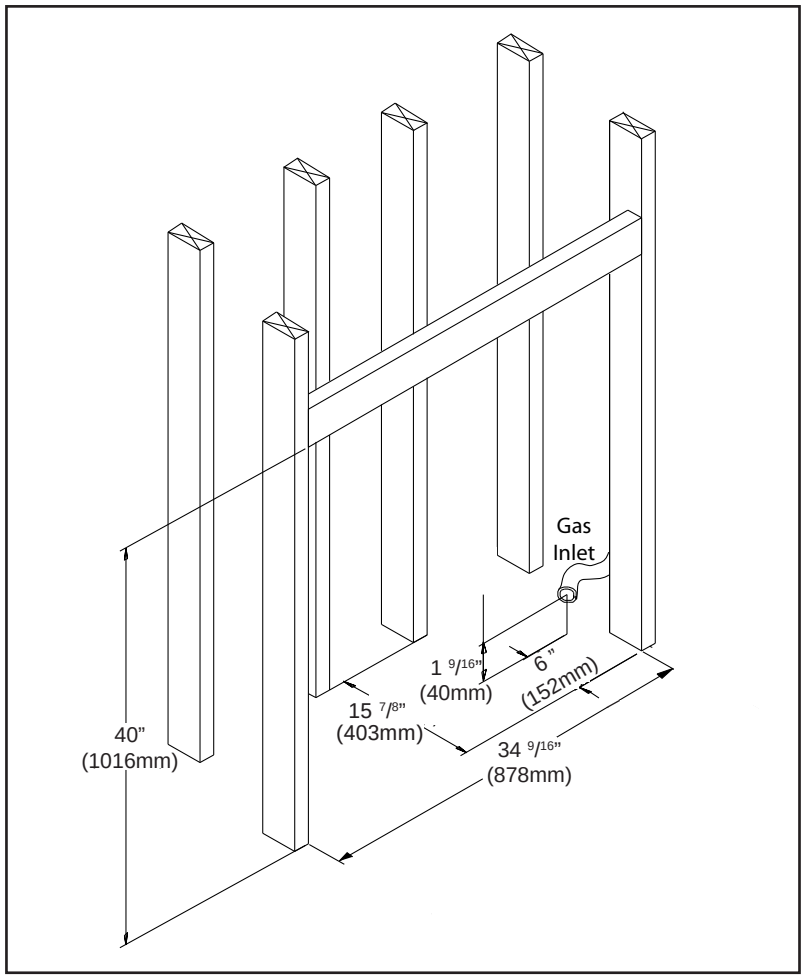

Figure 12. Dimensions for Framing the Firebox

Table 2. Framing Dimensions.

Minimum Framing Dimensions		
Depth	15 7/8"	403mm
Width	34 9/16"	878mm
Header Height	40"	1016mm
Chase Height (Rear Vent)	43 1/2"	1105mm
Chase Height (Top Vent)	*54"	1372mm
Gas Inlet (Front)	6"	152mm

*Minimum dimension with only an elbow off the top. Any vertical rise added increase the chase height respectively.

The location for the fireplace can be along a wall, raised, at floor level, or in a corner. There are specific framing measurements for each situation. The basic opening should have the dimensions shown in Figure 12. The fireplace must have a strong and level surface to be placed on. The surface should be made of wood or a non-combustible material, not carpet.

The gas line, **3/8" JIC fitting**, should be brought to the right side of the fireplace. The location should be chosen so the fireplace will be at least **36 inches (914 mm)** from drapes, doors and other combustibles. The framed opening should also be a minimum of **4 5/8" (117 mm)** from the nearest perpendicular wall (sidewall to the edge of the opening).

QUALIFIED INSTALLERS ONLY

Rear Vent Conversion:

For smaller openings the Q2L can be converted from a top vent to a rear vent unit.

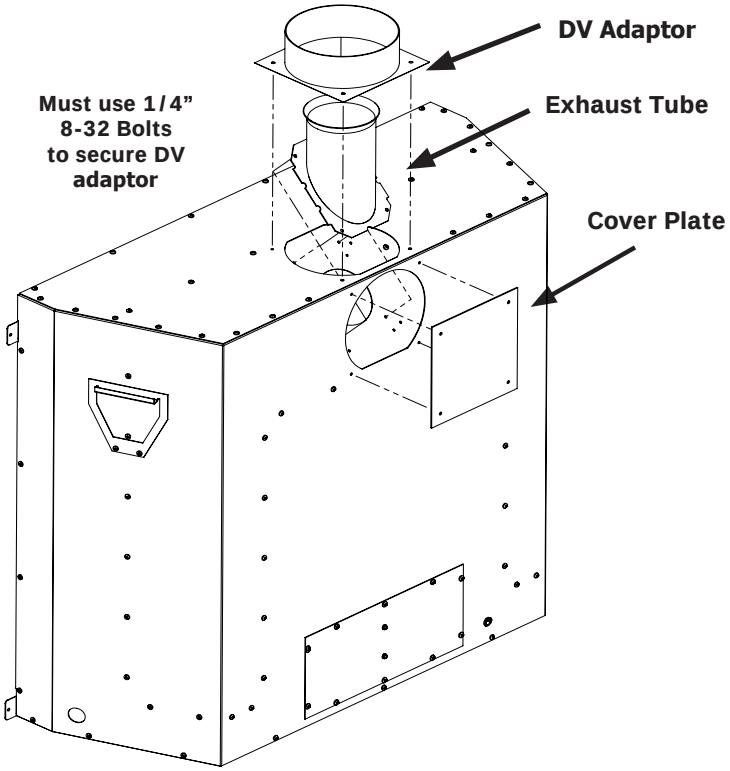

Figure 13. Vent Conversion - Step 1

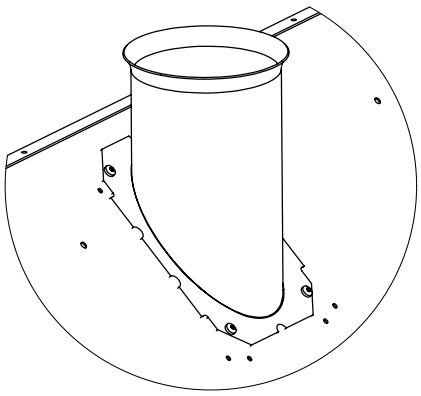

Figure 14. Upper Mounting Holes

Step 1: Using a T-20 screwdriver remove the DV Adaptor, Exhaust Tube, and cover plate (12 screws total) as shown in Figure 13.

Note: The DV adaptor and Cover Plate use the T20 **1/4"** bolts.

Step 2: Switch the removed parts around as shown in Figure 16 and re-install all 12 screws. Be sure not to damage any gaskets - If damage occurs fully remove the gasket and use high temp silicone as a replacement.

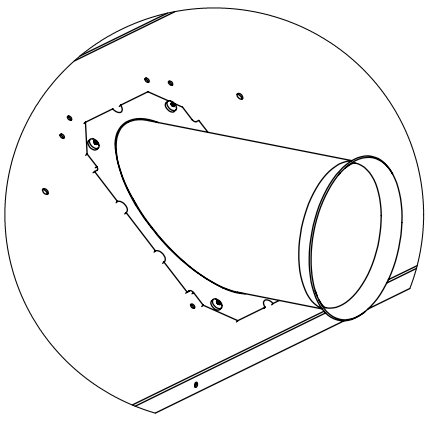

Figure 15. Lower Mounting Holes

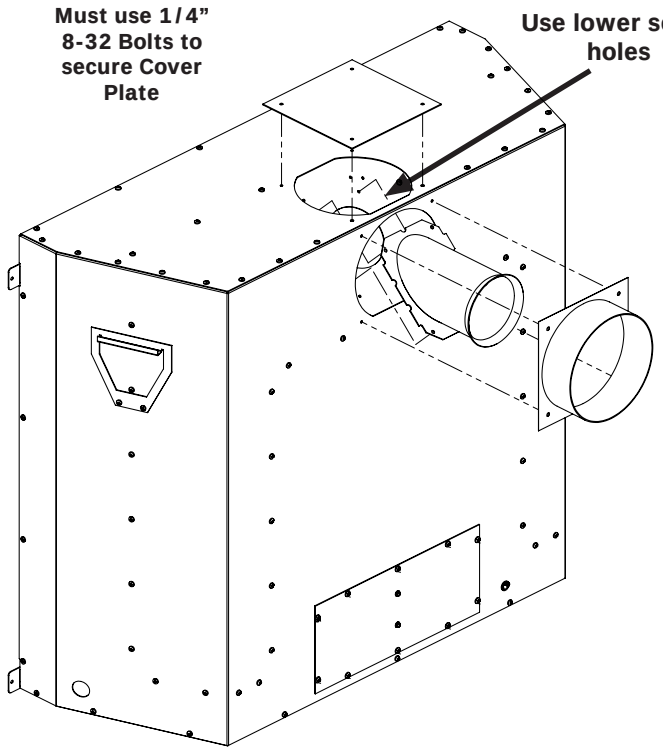

Figure 16. Vent Conversion - Step 2

Corner Installation:

The dimensions for installing a fireplace in the corner of a room are given in Figures 17A and 17B. Refer to "Initial Installation - Allowable Co-axial Vent Configurations" for allowable pipe lengths.

WARNING: Do not interfere with the structural integrity of the walls.

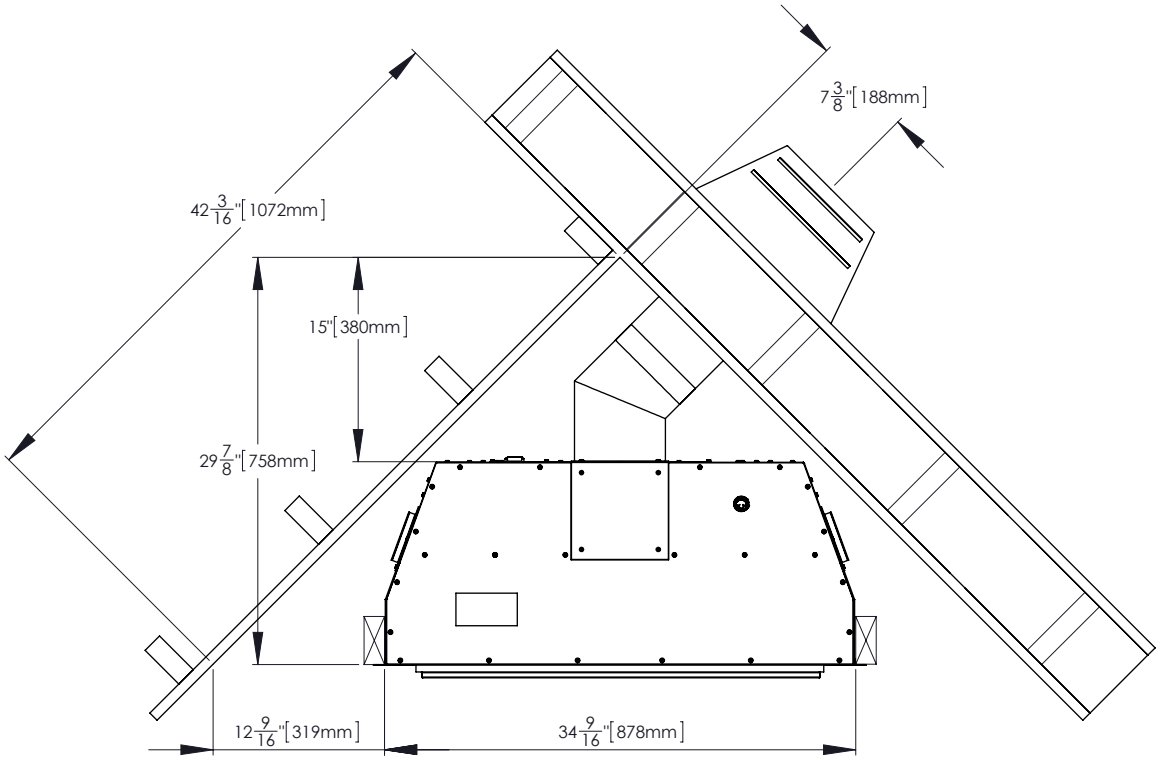

Figure 17A. Dimensions for a corner installation (Rear Vent)

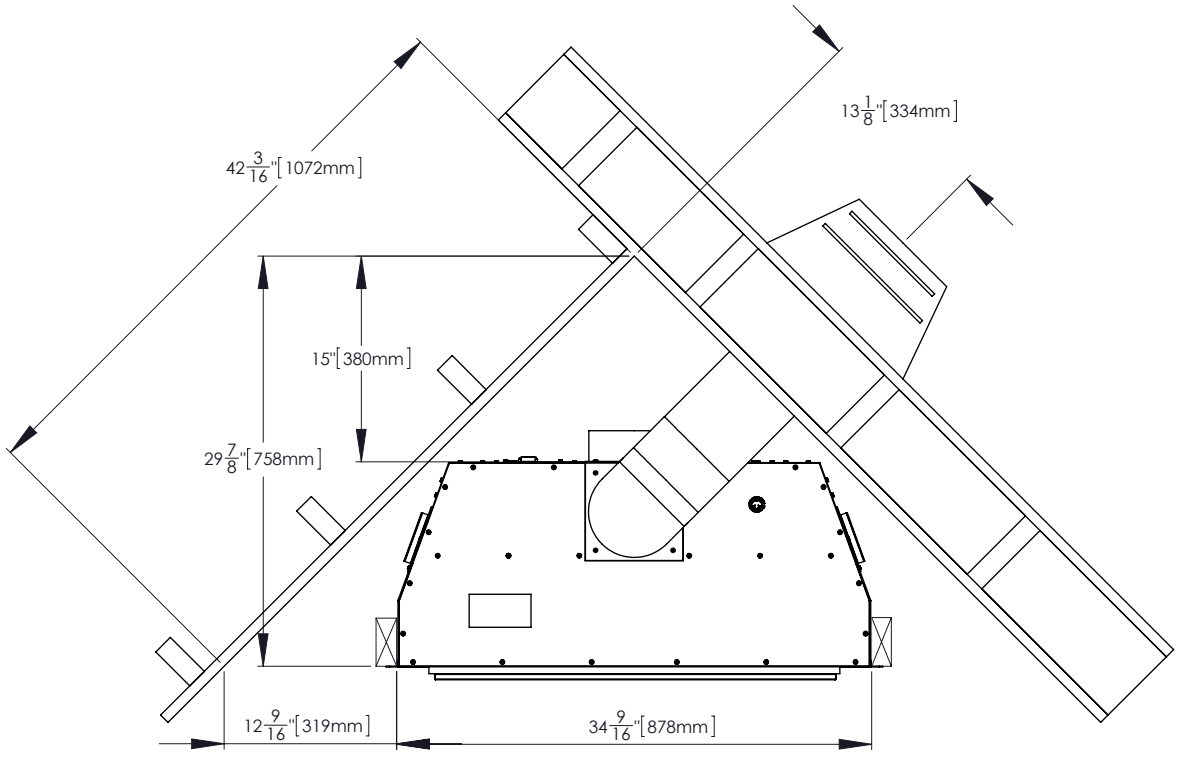

Figure 17B. Dimensions for a corner installation (Top Vent)

QUALIFIED INSTALLERS ONLY

FRAMING PLATE INSTALLATION:

A steel framing plate is included with your Q2L. The plate does not come installed on the unit but it attaches very easily with a 1/4" hex driver as shown below. This plate is used as a supportive surface to fill in the air gap above the unit in the installation construction. Non combustible material can be placed over this plate such a cement board. Non combustible material is only necessary over the fireplace opening and does not need to span the entire width of the framing plate. A wood mantle can we placed over top of the non-combustible as long as it stays within the mantle specicifactions.

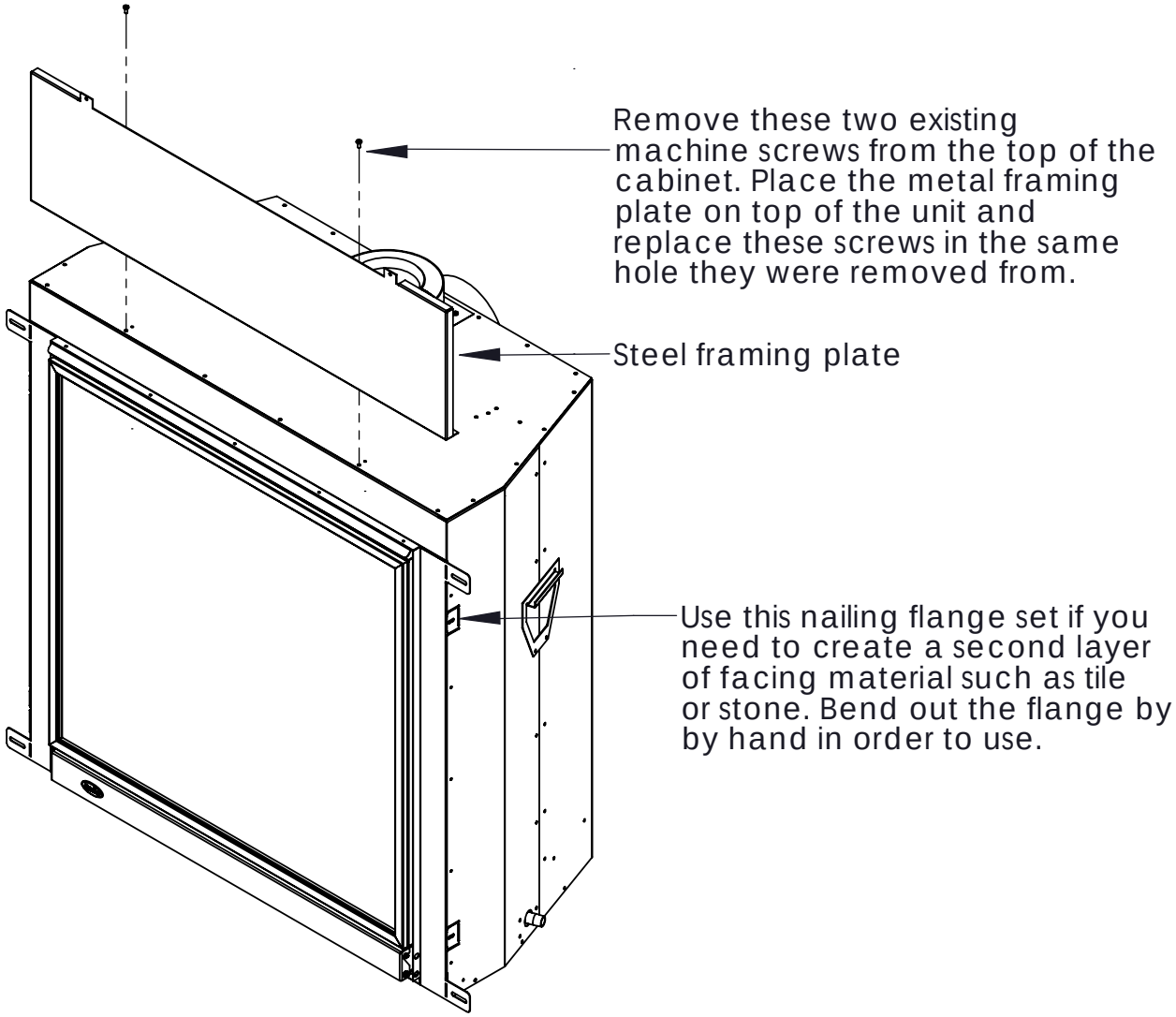

Figure 18A. Framing Plate Installation

Mantle & Non-Combustible Clearances:

When installing the Q2L as a zero clearance fireplace the correct clearances and materials must be used:

Above Unit: A minimum **10" (254mm)** of non-combustible facing material must be used above the firebox opening (in front of the included steel framing plate). The non-combustible is only required directly over the firebox opening and does not need to span the entire width of the framing plate.

In Front of Unit: The Q2L can be placed on the floor if desired although it is recommended that it be raised aleast an inch or higher for more heat sensetive materials such as carpet or linoleum.

Adjacent/Sidewall: There must be a minimum distance of **4 5/8" (117mm)** from the side of the Q2L cabinet to an adjacent wall composed of combustible material.

Mantle: It is not necessary to install a mantle, but if one is desired the guidelines as shown in Figure 19. Side mantle clearence should be no less then the distance from the top of the unit to the bottom on the top portion of the mantle.

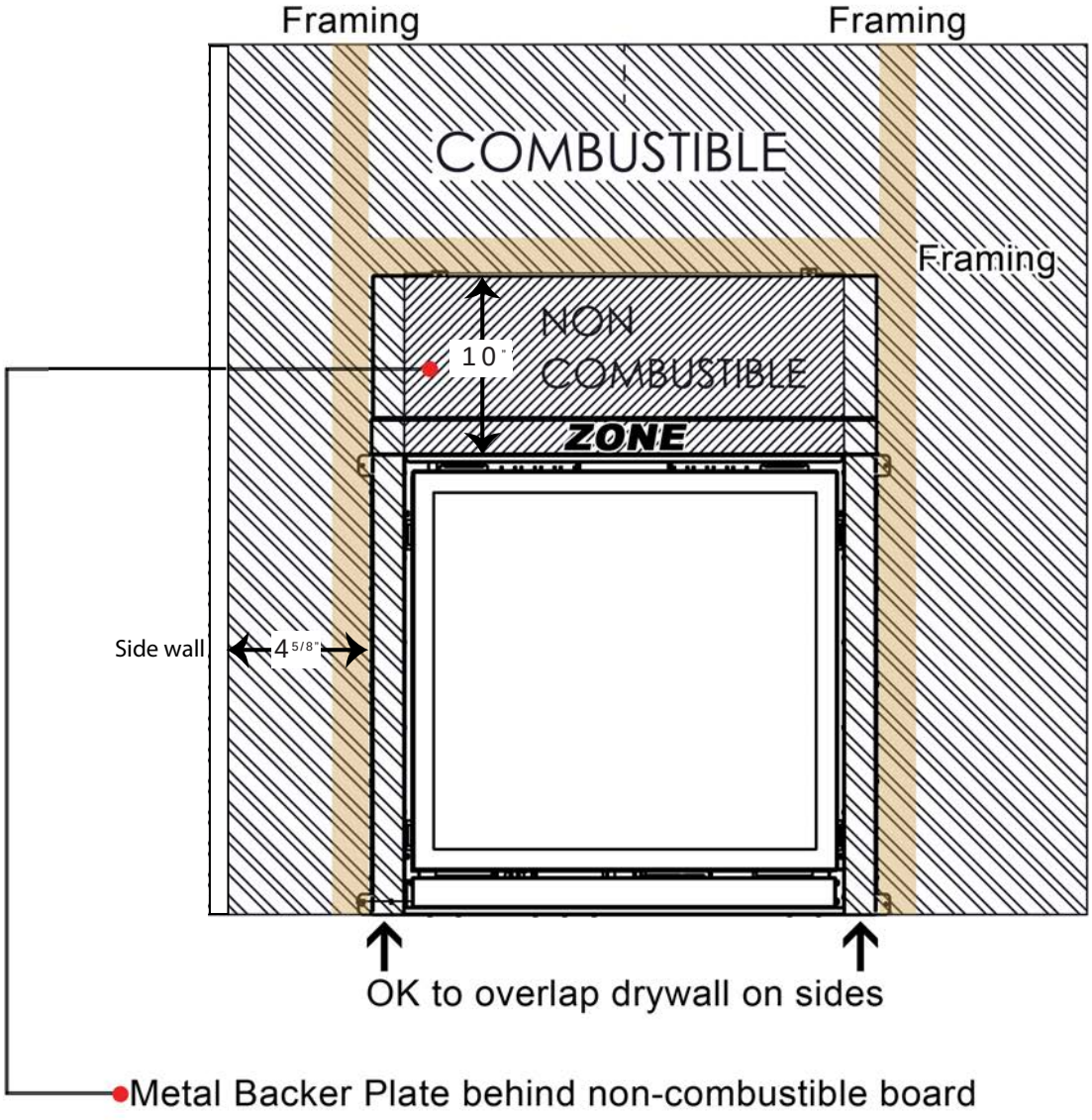

Figure 18B. Non Combustable Material

QUALIFIED INSTALLERS ONLY

Minimum Mantle Clearances

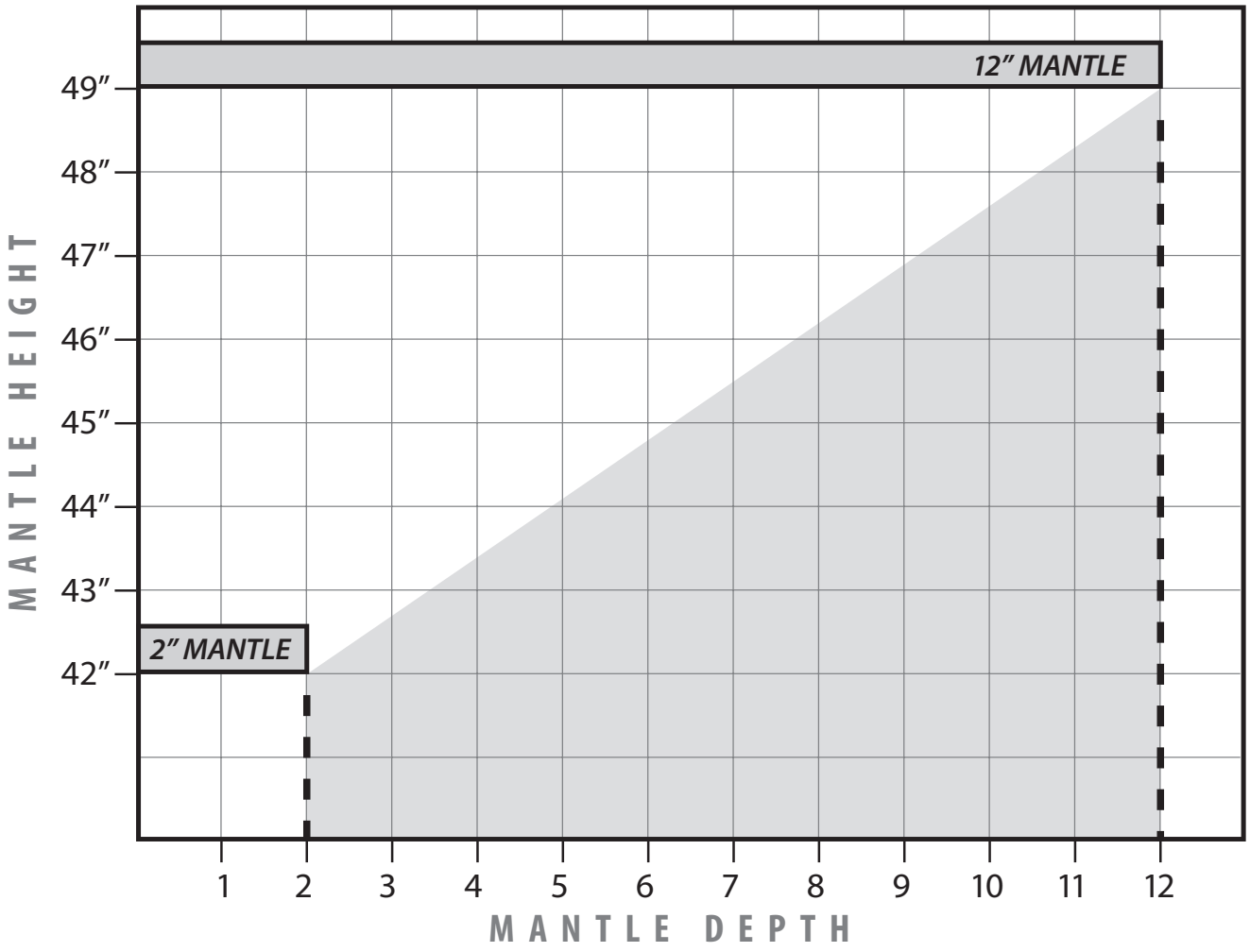

Figure 19. Mantle Clearances

Note: Mantle height dimensions are based from the bottom of the appliance.

DIRECT VENT:

WARNING: This appliance has been designed to draw room air for proper heat circulation from the bottom of the unit, and out the top front. Blocking or modifying these openings in any way can create hazardous situations.

The vent length for the Q2L must be between **6" (150 mm)** and **40' (12.2 m)**. This model is vented with co-axial **4"** intake, **6 5/8"** exhaust aluminum or stainless steel approved rigid vent leading into a vertical or horizontal termination cap. This model can also be used with aluminum or stainless steel flex venting. The flue collar of this model will fit inside of a standard **4"** x **6 5/8"** vent and must be either correctly interlocked or fastened, with three screws directly to the vent collar.

Check periodically that the vents are unrestricted. Also ensure that all direct vent pipes have been properly sealed and installed after routine inspection or cleaning. The air intake and exhaust pipes must be installed in the correct locations on the top of the Q2L.

QUALIFIED INSTALLERS ONLY

VENT TERMINATION RESTRICTIONS:

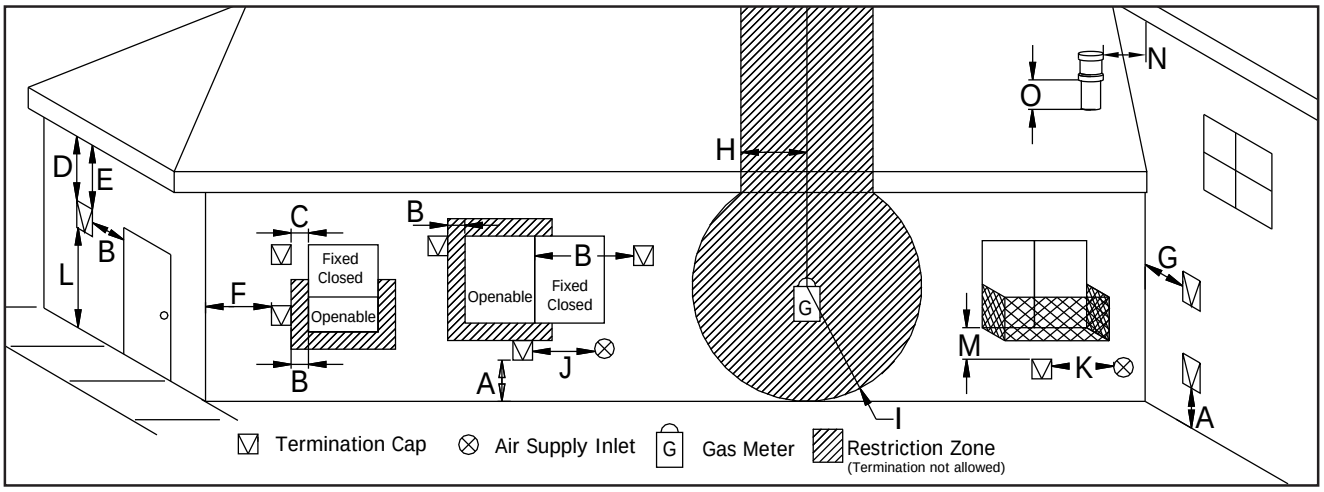

Figure 20. Vent Termination Restrictions, refer to Table 3

Table 3: Vent Termination Clearances

Letter	Canadian Installation [1]	US Installation[2]	Description
A	12 in (30 cm)		Clearance above grade, verandah, porch, deck, or balcony.
B	12 in (30 cm)	9 in (23 cm)	Clearance from window or door that may be opened.
C	12 in (30 cm)*		Clearance from permanently closed window (to prevent condensation).
D	24 in (60 cm)*		Vertical clearance to ventilated soffit located above the terminal, within a horizontal distance of 2 ft (60 cm) from center line of terminal.
E	18 in (45 cm)*		Clearance to unventilated soffit.
F	12 in (30 cm)*		Clearance to outside corner.
G	12 in (30 cm)*		Clearance to inside corner.
H	3 ft (91 cm) within a height of 15 ft (4.5 m) above the meter/ regulator assembly	3 ft (91 cm) within a height of 15 ft (4.5 m) above the meter/ regulator assembly*	Clearance to each side of center line extended above meter/regulator assembly.
I	3 ft (91 cm)	3 ft (91 cm)*	Radial clearance around service regulator vent outlet.
J	12 in (30 cm)	9 in (23 cm)	Clearance to non-mechanical air supply inlet to building, or the combustion air inlet to any other appliance.
K	6 ft (1.83 m)	3 ft (91 cm) above if within 10 ft (3 m) horizontally	Clearance to mechanical air supply inlet.
L	7 ft (2.13 m)t	7 ft (2.13 m)*t	Clearance above paved sidewalk or paved driveway located on public property.
M	12 in / 30 cm+	12 in / 30 cm*+	Clearance under verandah, porch, deck, or balcony.
N	12 in (30 cm)*		Clearance horizontally to any surface (such as an exterior wall) for vertical terminations.
O	12 in (30 cm)		Clearance above roof line for vertical terminations.

1 In accordance with the current CSA B149, Natural Gas and Propane Installation Code.
2 In accordance with the current ANSI Z223.1 NFPA 54, National Fuel Gas Code.
* These numbers are only estimates.
t A vent shall not terminate directly above a side walk or paved driveway that is located between two single family dwellings and it serves both dwellings.
+ Permitted only if verandah, porch, deck, or balcony is fully open on a minimum of two sides beneath the floor.

Clearances are in accordance with local installation codes and the requirements of the gas supplier.

NOTE: Venting terminals shall not be recessed into walls or siding.

Initial Installation

QUALIFIED INSTALLERS ONLY

Venting Clearances:

A **1" (25 mm)** clearance to combustibles must be maintained around any vertical vent pipe. Around a horizontal vent pipe, the clearance to combustibles should be **2" (51 mm)** above and **1½" (38 mm)** on the sides and bottom. When combustible materials are directly above a 90° elbow, **3" (76 mm)** of clearance are necessary.

Table 4. Vent Pipe Minimum Clearances

	Vertical Pipe to the Side Walls	Horizontal Pipe to the Sides & Bottom	Above an Elbow Above the Unit	Above an Elbow Not Above the Unit	Above Horizontal Vent Pipe	Wall Frame 8" (203mm) or less
Hard Pipe	1" (25.4 mm)	1½" (38.1 mm)	3" (76.2 mm)	3" (76.2 mm)	2" (51 mm)	10"x10" (25x25cm)

A **10" (254 mm)** x **10" (254 mm)** frame (see Figure 21) will assure the proper support and spacing for the vent pipe as it passes through the wall. Installations in Canada require that a wall thimble be used for passing through walls and ceilings. All sealing and vapour barriers must comply with local building codes.

The configuration of the venting pipes depends on the locations of walls, ceilings, and studs. However, the pipes cannot be of arbitrary length and arrangement. Because the length of the vertical and horizontal sections dramatically affects the burning efficiency of the fireplace, certain guidelines have been set in Initial Installation - Allowable Co-Axial Vent Configurations. Venting terminals can not be recessed into a wall or siding.

WARNING: This gas appliance must not be connected to a chimney flue serving a separate solid-burning appliances.

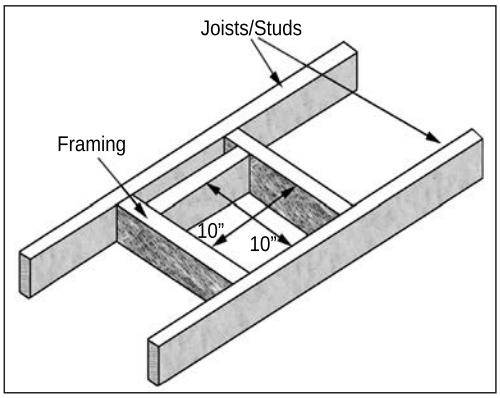

Figure 21. Vent Framing For Wall or Ceiling

Approved Venting Parts:

Table 5: Approved Vent Manufacturers

Manufacturer	Trade Name	Nominal Sizes
ICC	EXCELDirect	4" - 6 5/8"
Security Chimneys International LTD	Secure Vent	4" - 6 5/8"
BDM Pro-Form Flexible Dv	Pro-Form	4" - 6 5/8"
Selkirk	Direct-Temp	4" - 6 5/8"
Selkirk	Amp DV	4" - 6 5/8"
M&G DuraVent	Direct Vent Pro	4" - 6 5/8"

The Q2L fireplace has been tested and certified for use with M&G DuraVent DirectVent Pro, ICC EXCEL Direct, Selkirk DIRECT-TEMP, and Selkirk AMP DV venting systems. Refer to the table below for part numbers of commonly used parts for both venting systems. For more venting parts please visit the respective manufacturers' website.

WARNING: Do not mix parts from different vent manufacturers' systems.

QUALIFIED INSTALLERS ONLY

EXCEPTION TO WARNING: This product has been evaluated by Intertek for using a Direct Vent GS starting collar in conjunction with Secure Vent, Direct-Temp, AmeriVent Direct, and EXCELDirect venting systems. Use of these systems with the Direct Vent GS starting collar is deemed acceptable and does not affect the Intertek WH listing of the appliance.

Table 6: Vent Part Numbers (must state if galvanized or black wanted)

Direct Vent Pro	EXCELDirect	DIRECT-TEMP	AMP DV	Description
46DVA-06	4DL6	4DT-06		6" pipe length
			4D7	7" pipe length
46DVA-09	4DL9	4DT-09		9" pipe length
46DVA-12	4DL1	4DT-12	4D12	12" pipe length
46DVA-16		4DT-16		18" pipe length
46DVA-24	4DL2	4DT-24	4D2	24" pipe length
46DVA-36	4DL3	4DT-36	4D3	36" pipe length
46DVA-48	4DL4	4DT-48	4D4	48" pipe length
46DVA-60				60" pipe length
46DVA-E30				30° elbow, black
46DVA-E45	4DE45	4DT-EL45	4D45L	45° elbow, black
46DVA-E90	4DE90	4DT-EL90	4D90L	90° elbow, black
46DVA-VSS, DVA-BVS	VSS	4DT-VS, VSK	4DHVS, DVSK	Vinyl siding standoff/sheild
46DVA-WT, 46DVA-WTU	4WT	4DT-WT	4DWT	Wall thimble
46DVA-SC	SQSC, SC	4DT-SC	4DSC	Storm collar
46DVA-WFS		4DT-FS		Wall Fire stop
46DVA-FS	4CS	4DT-FS	4DFSP	Ceiling Fire stop
46DVA-IS	4AS	4DT-AIS	4DAIS12, AIS36	Attic Insulation Shield
46DVA-WS	4WS	4DT-WS/B	4DWS	Wall strap/support/band
46DVA-HC	HT4	4DT-HC	4DHCS	High wind horizontal termination
46DVA-VCH	4SVT			High wind vertical termination
46DVA-H2-SNK14 46DVA-SNK14	ST14	4DT-ST14		Snorkel Termination
46DVA-17TA				11" to 17" pipe, adjustable
46DVA-24TA				17" to 24" pipe, adjustable
	4DLA30			16.5" to 29" pipe , adjustable
	4DLS1			1 7/8" to 9" slip length pipe
	4DLS2			1 7/8" to 21" slip length pipe
			4D7A	3" to 5" pipe, adjustable
		4DT-AJ12	4D12A	4" to 10" pipe, adjustable
			4D16A	3" to 14" pipe, adjustable
			4D26A	3" to 24" pipe, adjustable
		4DT-TL14		14" to 22" pipe, telescopic
		4DT-TL36		38" to 70" pipe, telescopic
46DVA-F6	6EFA	4DT-AF6	4DF	Flashing, 0/12 to 6/12 roof pitch
46DVA-F12	6EFB	4DT-AF12	4DF12	Flashing, 7/12 to 12/12 roof pitch
46DVA-FF	6EF			Flat Roof Flashings
46DVA-CFK	4MF			Masonary Flashing
		4DT-MCK	4DRCKM	Masonry Conversion Kit

QUALIFIED INSTALLERS ONLY

HORIZONTAL TERMINATION - REAR VENT:

The Q2L can be installed as a natural gas Appliance in rear vent applications with no vertical rise within the parameters as shown in Figures 22 and 23. A 14" minimum snorkel must be used for propane applications If any vertical rise is required a top vent configuration should be used.

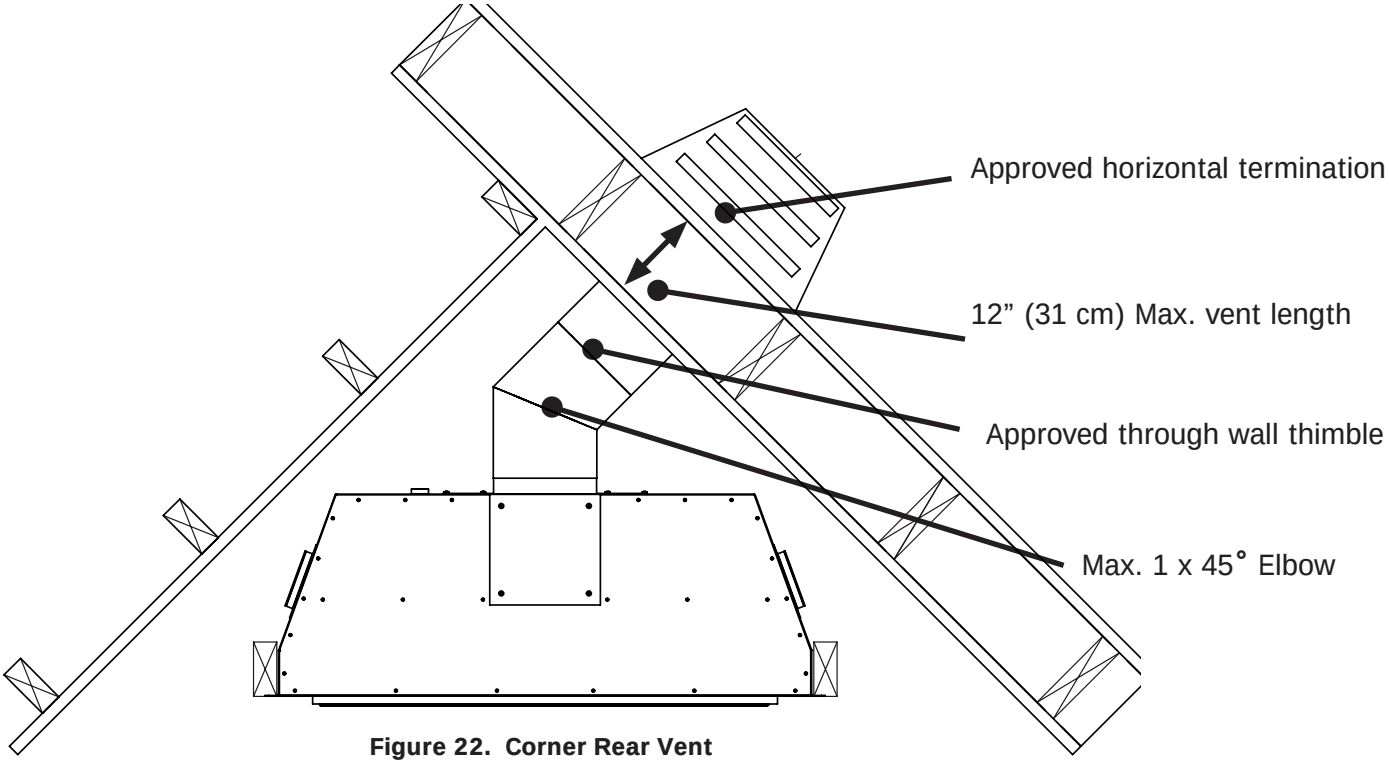

Figure 22. Corner Rear Vent

Note: For every 12" (305mm) of horizontal venting travel there should be at least 1/4: (6.4mm) of vertical travel.

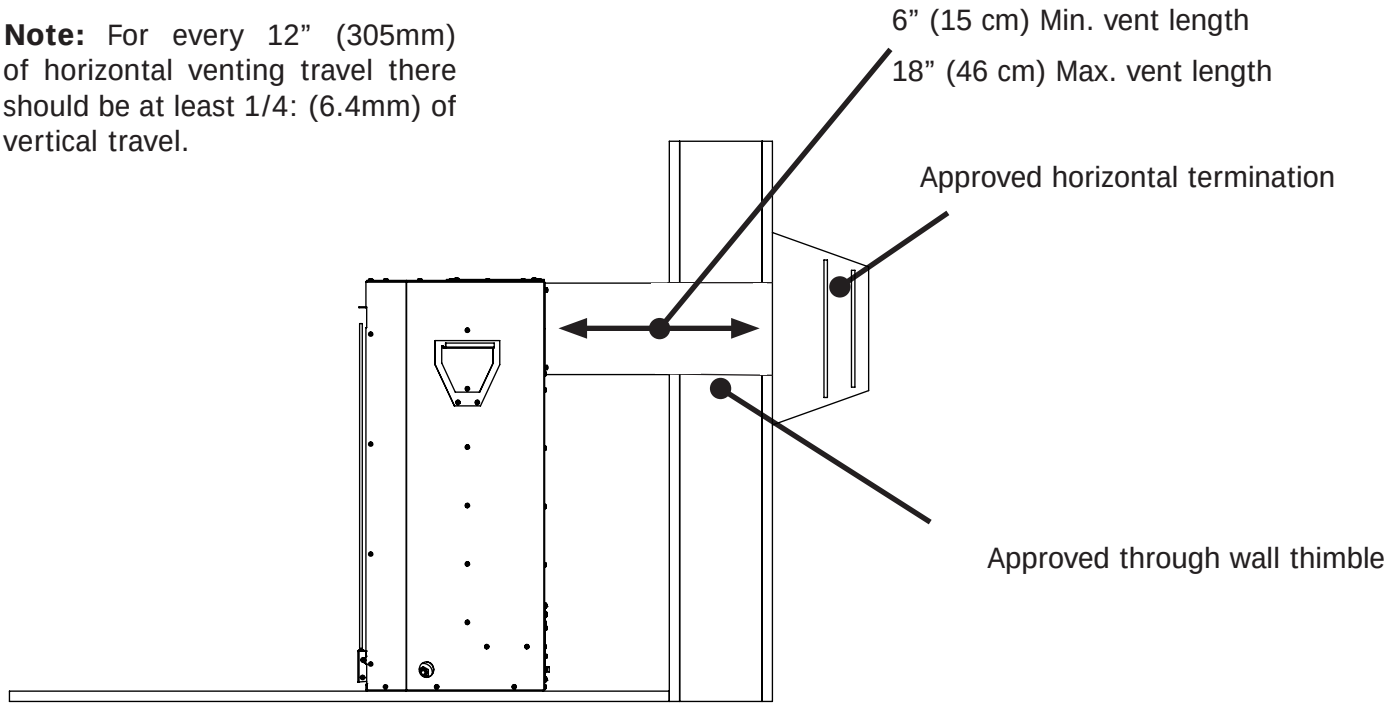

Figure 23. Flat to Wall Rear Vent

QUALIFIED INSTALLERS ONLY

ALLOWABLE CO-AXIAL VENT CONFIGURATIONS:

Figures 24 shows the range of venting options for **top vented configurations only** using either vertical or horizontal terminations; any layout that remains within the shaded area is acceptable. Having the fewest number of elbows is ideal as they tend to disrupt air movement. Using 45˚ elbows is preferable to using 90˚ elbows. Also, a shorter vent system will perform better than a longer one. The total length of horizontal vent pipe can not exceed 20 feet (6.1m) and the total vent length can not exceed 40ft (12.2m).

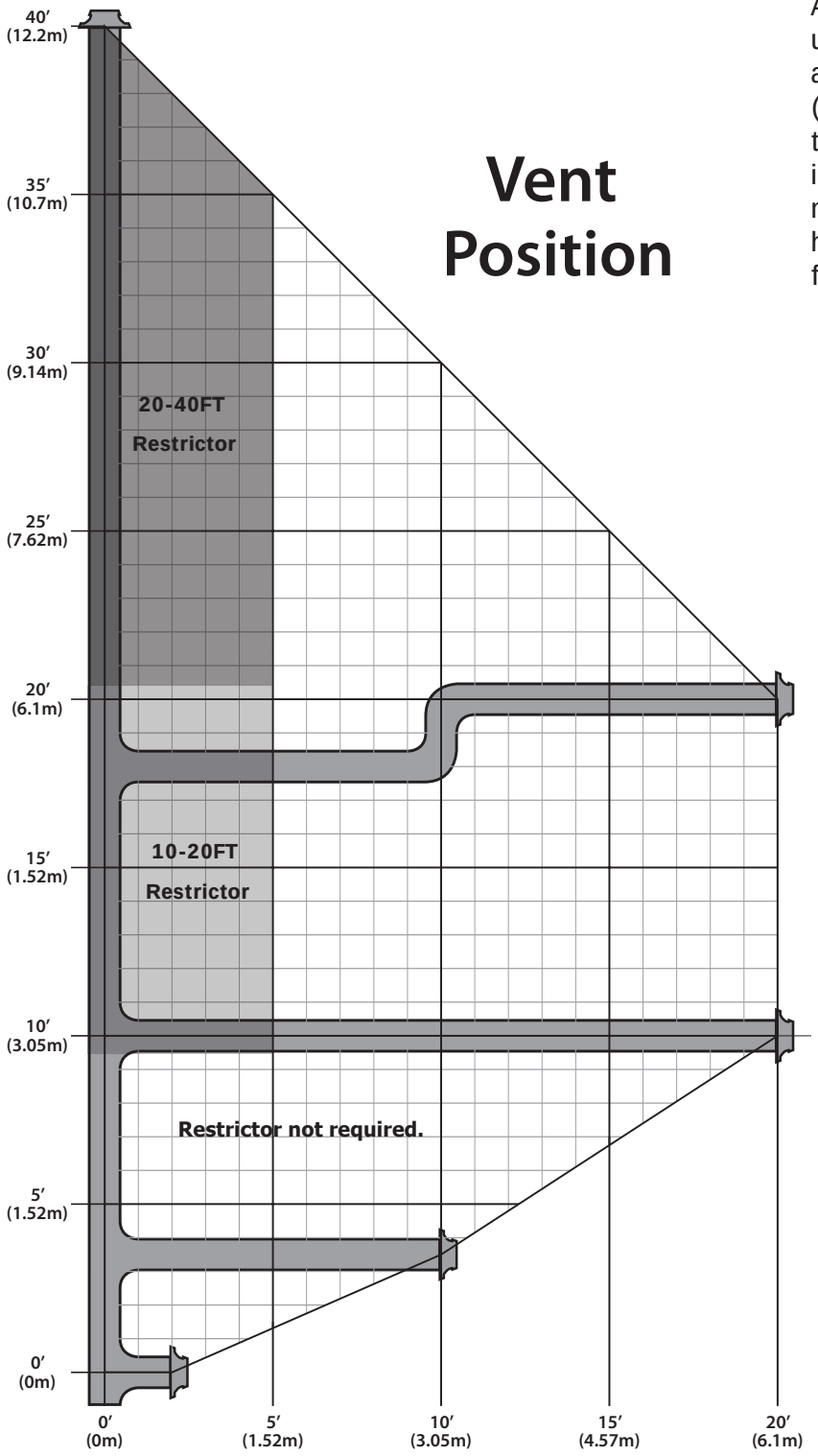

Any combination of rise and run can be used as long as it lays within the shaded area (a total of two (2) 90˚ elbows or four (4) 45˚ elbows can be used. In addition to what is shown, if a 90˚ elbow is used in the horizontal plane, 3 feet (91.4cm) must be subtracted from the allowable horizontal run (for each 45˚ elbow, 1½ feet must be subtracted).

ATTENTION

For all rear vented LP a 14" snorkel must be used, see venting table on page 24 for approved snorkel termination

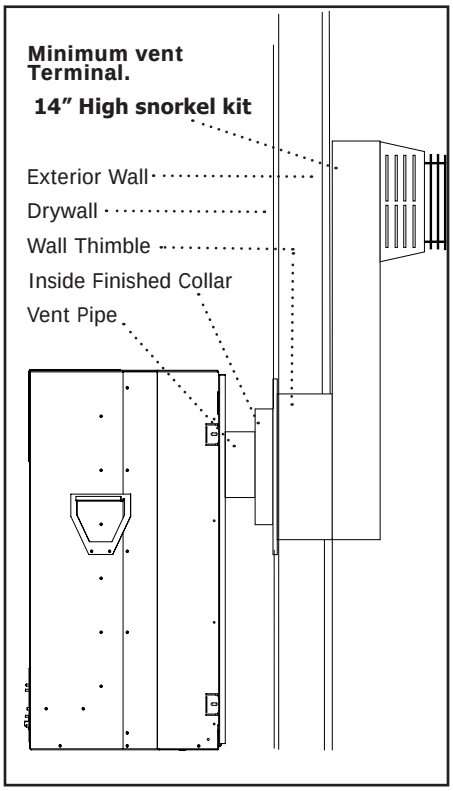

Figure 24. Possible Vent Configurations for Top Vent Only. Vertical and Horizontal Terminations

QUALIFIED INSTALLERS ONLY

HORIZONTAL TERMINATION:

NOTES:

1. **Horizontal pipes must not be level. For every 12" (305 mm) of horizontal travel (away from the stove), there should be at least ¼" (6.4 mm) of vertical travel. Never allow the vent to run downward, as this could cause high temperatures or even present the possibility of a fire.**
2. The exterior of the horizontal vent termination must not be blocked or obstructed.
3. If the vent termination is not being attached to wood, the four wood screws provided should be replaced with material appropriate fasteners.
4. For buildings with vinyl siding, a vinyl standoff should be installed between the vent cap and the exterior wall. Attach the vinyl siding standoff to the horizontal termination. Note that the termination bolts onto the flat portion of the standoff, providing an air space between the wall and the vent termination. The air gap prevents excessive heat from possibly melting the vinyl siding.
5. Horizontal pipes must be supported every **3' (914 mm)**. Plumber's all round strap will suffice.

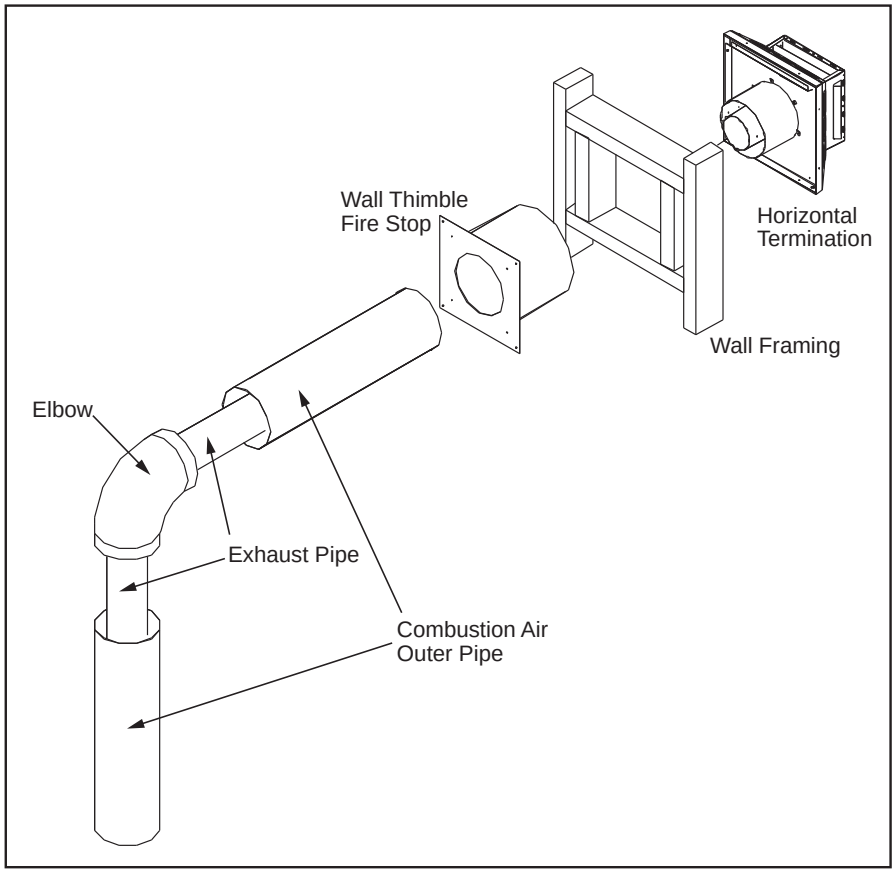

Figure 25. Horizontal Vent Termination

6. When running horizontal pipe, clearances to combustibles must be maintained **1½ inches (38 mm)** sides, **1½ inches (38 mm)** bottom, and **2" (51 mm)** top.

Step 1. Set the fireplace in the desired location. Check to determine if wall studs will be in the way when the venting system is attached. If this is the case, the location of the fireplace may have to be adjusted or the venting may have to be offset.

Step 2. Direct vent pipe sections are designed with special twist-lock connections. Dry fit the desired combination of pipe and elbows to the appliance adaptor.

Step 3. With the pipe in the correct position and attached to the fireplace, mark the wall for a **10" (25.4 cm)** x **10" (25.4 cm)** square hole (see Figure 25). The center of the hole should match the center line of the horizontal pipe. Cut and frame the hole in the exterior wall where the vent will be terminated. If the wall being penetrated is made of a non-combustible material (i.e. masonry or concrete) a **7" (17.8 cm)** hole is acceptable.

Initial Installation

QUALIFIED INSTALLERS ONLY

Exhaust Restrictors: Your Q2 fireplace is supplied with 2 different exhaust restrictors. Your venting configuration will determine which restrictor plate you will need to use. Look at the Fig. 24 on page 26 to determine which restrictor your installation will require.

WARNING: IMPROPERLY SETTING THE RESTRICTOR SIZE CAN ALTER THE LOOK AND EFFICIENCY OF YOUR FIREPLACE AND IN CERTAIN SITUATIONS CAN CAUSE OVERHEATING ISSUES WHICH CAN LEAD TO BUILDING FIRE.

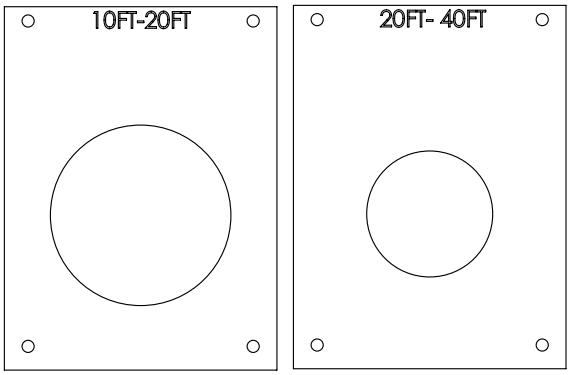

Figure 25a. (Exhaust restrictors supplied with your fireplace)

Only two wingnuts are required to fasten the restrictor to the firebox.

Wingnuts are to be used on the bolts that protrude from the bottom of the plate. seen in figure 25c.

RESTRICTOR INSTALLATION:

Tools Needed: T20-Torx Driver bit drill/screwdriver.

Step 1. Determine which/if any restrictor will be required for your installation Fig.24 Page 26.

Step 2. Remove Saftey screen and glass.

Step 3. Using T20 screwdriver remove the X3 fasteners securing the exhaust baffle in place. Fig.25b

Step 4. Push up the Exhaust baffle UP at the Rear of the firebox The exhaust baffle can now be removed.

Step 5. With the text orientated towards the top locate the plate over the 4 protruding bolts.

Step 6. Fasten wingnuts to the bottom bolts only. Fig.25c

Step 7. Locate baffle plate on the 2 fasteners at rear of firebox.

Step 8. Using X3 T20 screws secure front of Exhaust Baffle to the underside of the firebox. Fig 25b.

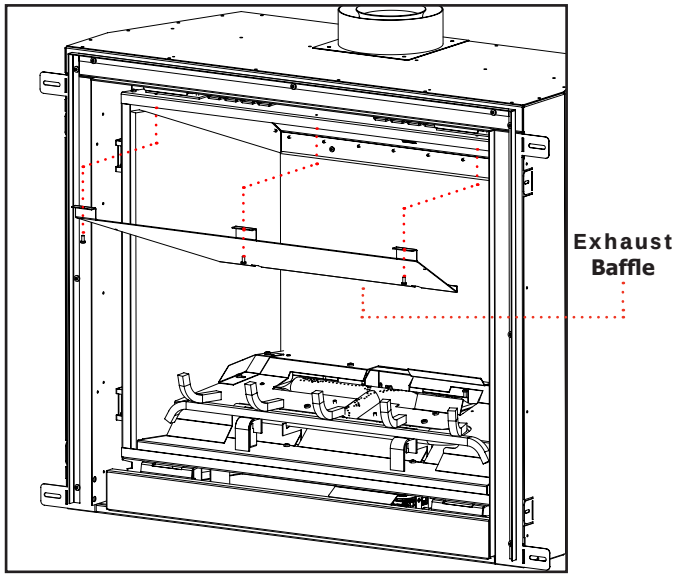

Figure 25b.

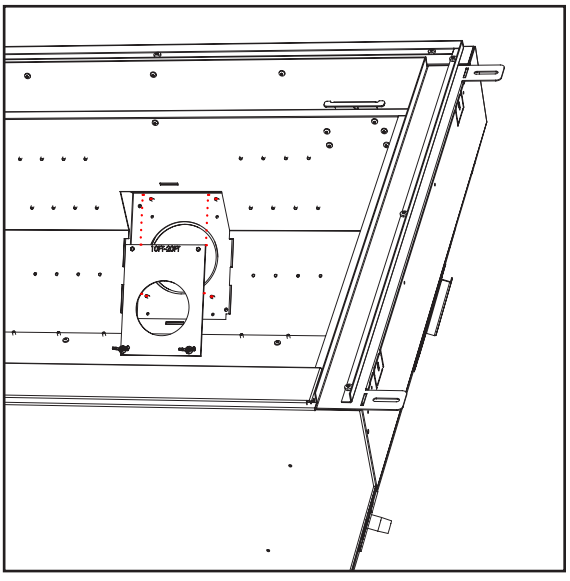

Figure 25c.

NOTE: For Simpson Duravent only, place a bead of Mil-Pac or Rutland No 78 Stove and Gasket Cement on the outer edge of the inner exhaust pipe (non-flared end). Push the pipe sections together, then twist about ¼ turn, making sure the two sections are fully locked. Wrap all seams with foil ducting tape.

Step 4. With the hole now framed, the wall thimble installed, and the pipe extending into the wall, proceed to the outside. Attach the termination to the pipe using RTV and Mil-Pac or Rutland No 78 Stove and Gasket Cement to seal joints. The vent pipe must extend into the vent cap at least **1¼ inches (3.2 cm)**. Secure the connection between the vent cap and the pipe by attaching the two (2) sheet metal straps, which extend from the vent cap assembly to the outer wall of the vent pipe. Bend any remaining portion of the strap back towards the vent cap. Security Secure Vent uses a twist lock cap.

Step 5. Position the horizontal vent termination in the center of the **10" (25.4 cm)** square hole and attach to the exterior wall with the four screws provided. The arrow on the vent termination should be pointing up. Run a bead of non-hardening mastic around the edges of the vent cap, to make a seal with the wall. Ensure the proper clearances to combustibles have been maintained.

VERTICAL TERMINATION:

Step 1. Check the instructions for required clearances (air spaces) to combustibles when passing through ceilings, walls, roofs, enclosures, attic rafters, or other nearby combustible surfaces. Do not pack air spaces with insulation.

Step 2. Set the gas appliance in the desired location. Drop a plumb bob down from the ceiling to the position of the appliance flue exit, and mark the location where the vent will penetrate the ceiling. Drill a small hole at this point. Next, drop a plumb bob from the roof to the hole previously drilled in the ceiling, mark the spot where the vent will penetrate the roof. Determine if ceiling joists, roof rafters, or other framing will obstruct the venting system. You may wish to relocate the appliance, or to offset, to avoid cutting load bearing members.

Step 3. To install the Round Support Box/Wall Thimble in a flat ceiling, cut a **10 " (25.4 cm)** square hole in the ceiling, centered in the hole drilled in Step 2. Frame the hole as shown in Figure 26.

Step 4. Assemble the desired lengths of black pipe and elbows necessary to reach from the appliance adapter up through the Round Support Box. Insure that all pipe and elbow connections are in their fully twist-locked position.

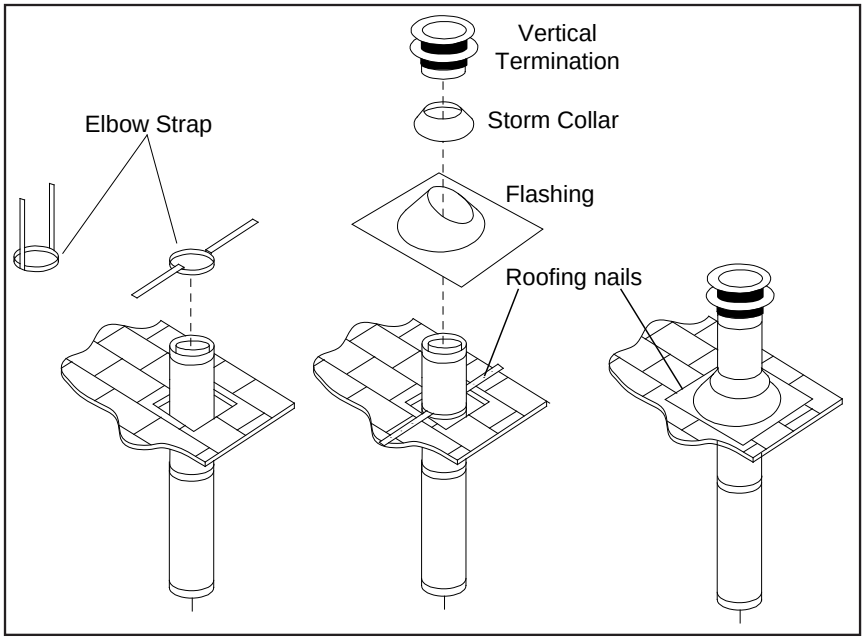

Figure 26A. Vertical Vent Termination

Step 5. Cut hole in the roof centered on the small hole placed in the roof from Step 2. The hole should be of sufficient size to meet minimum requirements for Clearance to Combustibles, as specified. Continue to assemble lengths of pipe and elbows necessary to reach from the ceiling support box up through the roof line. Galvanized pipe and elbows may be utilized in the attic, as well as above the roof line. The galvanized finish is desirable above the roof line, due to the higher corrosion resistance.

Step 6. Once the pipe sections have been joined, and run up through the hole in the roof, slip an elbow strap over the exposed sections, bend the support straps outwards, and push the elbow strap down to the roof level, as shown in Figure 26. Tighten the clamp around the pipe section. Use a level to make sure the pipe is truly vertical. With roofing nails, secure the support straps to the roof. Seal the nails holes heads with non-hardening mastic. Trim the excess length of the support straps that extend out beyond the edge of the flashing.

Step 7. Slip the flashing over the pipe section protruding through the roof. Secure the base of the flashing to the roof with roofing nails. Use a non-hardening sealant between the uphill edge of the flashing and the roof. Insure the roofing material overlaps the top edge of the flashing. Verify that you have at least the minimum clearance to combustibles at the roof line.

Step 8. Continue to add pipe sections until the height of the vent cap meets the minimum code requirements. Refer to Figure 27 and Table 7. Note that for steep roof pitches, the vent height must be increased. In high wind conditions, nearby trees, adjoining roof lines, steep pitched roofs, and other similar factors can result in poor draft, or down drafting. In these cases, increasing the vent height may solve the problem.

Step 9. Slip the storm collar over the pipe, and push it down to the top of the roof flashing as shown in Figure 26. Use the non-hardening sealant around the joint between the pipe and the storm collar.

Step 10. Twist-lock the vent cap.

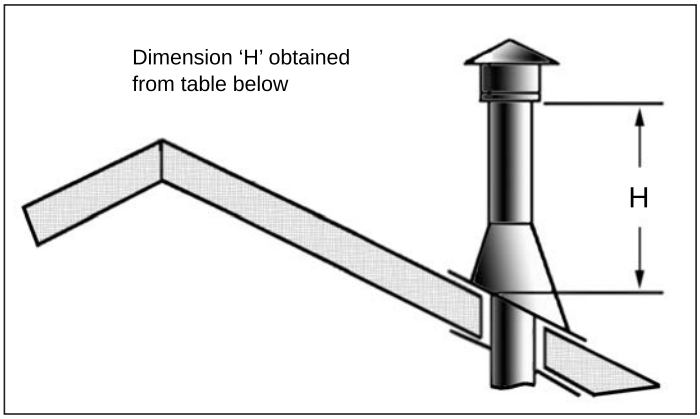

Figure 26B: Height of Vertical Termination; Reference Table 7

Table 7: Minimum 'H' for Figure 27.

Roof Pitch	Minimum Height (H)	
	Feet	Meters
Flat to 7/12	1	0.3
Over 7/12 to 8/12	1.5	0.46
Over 8/12 to 9/12	2	0.61
Over 9/12 to 10/12	2.5	0.76
Over 10/12 to 11/12	3.25	0.99
Over 11/12 to 12/12	4	1.22
Over 12/12 to 14/12	5	1.52
Over 14/12 to 16/12	6	1.83
Over 16/12 to 18/12	7	2.13
Over 18/12 to 20/12	7.5	2.29
Over 20/12 to 21/12	8	2.44

Initial Installation

QUALIFIED INSTALLERS ONLY

Flex Venting:

This fireplace is certified to work with aluminum co-axial flex venting; figure out your venting configuration to determine which option is correct for your particular setup (see Approved Co-Axial Vent Configurations section of Owner's Manual). **WARNING: Adhere to all rigid venting safety measures and clearances.**

Note: Flex venting can be used for any configuration that rigid is approved for.

Approved flex venting options:

4X7 BDM Pro-Form 5ft kit [50-3461]: Complete venting kit for "up & out" applications, vertical rise between 18" (457mm) and 30" (762mm).

4X7 BDM Pro-Form 10ft kit [50-3462]: Complete venting kit for "up & out" applications, vertical rise between 30" (762mm) and 78" (1981mm).

4X7 Flex Adapter Kit [50-3788]: This kit will allow you to adapt co-axial flex to the fireplace, make your vent run, then adapt back to rigid venting **(flex not included)**.

4X6$^{5/8}$ Duravent 4ft length [46DVA-48FF]: Flexible solution to an otherwise rigid vent run (DuraVent Pro systems ONLY, order through dealer).

4X6$^{5/8}$ Duravent 10ft length [46DVA-120FF]: Flexible solution to an otherwise rigid vent run (DuraVent Pro systems ONLY, order through dealer).

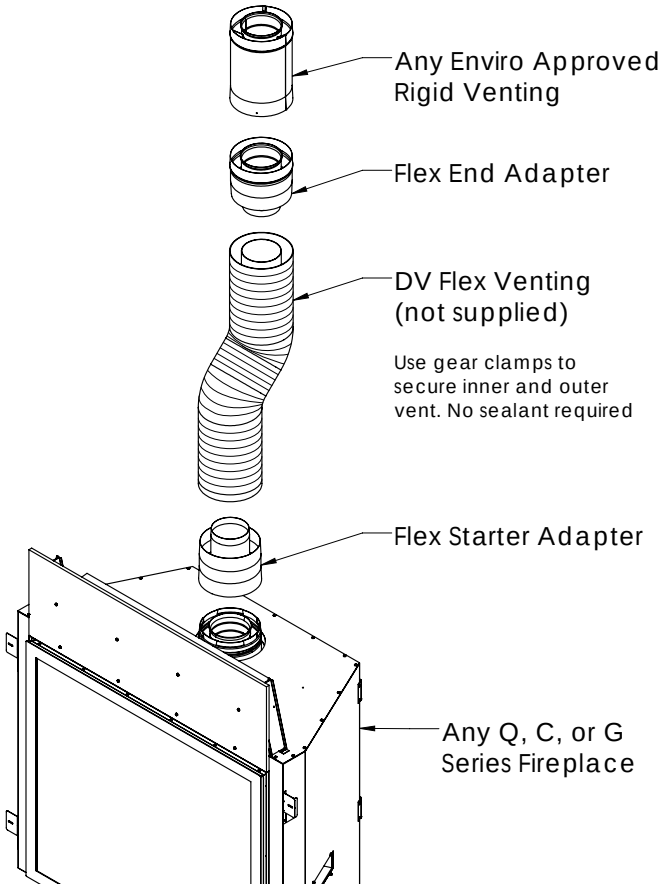

Figure 27A. Flex Adapter Kit Install

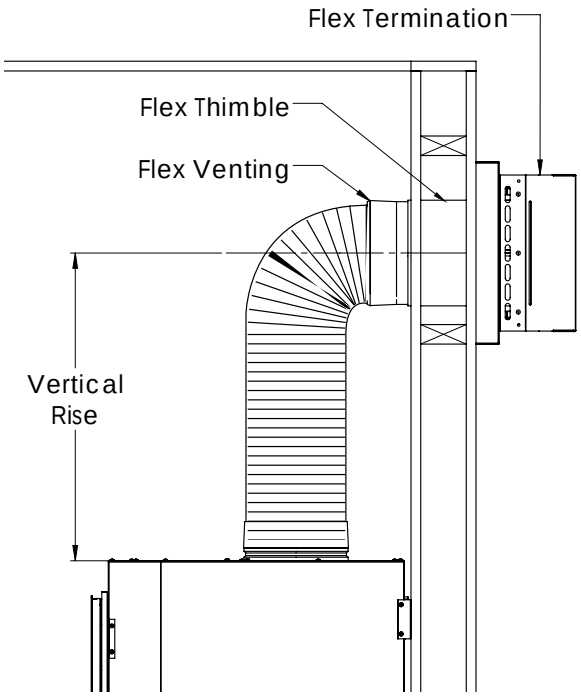

Figure 27B. "Up & Out" Flex Application

Important Information:

-Do not bend horizontal vent over 90 degrees.

-All horizontal runs should have a minimum 1/4" (6mm) rise per foot for optimal performance.

-Do not allow the inner flex pipe to contact the outer pipe, keep it pulled tight and use spacer springs.

-Spacers are required at the start, middle, and end of each elbow to ensure the gap is maintained.

-Do not add any extensions to the preset kits, if more length is required, use rigid pipe.

-No need for liquid sealant; secure flex venting with aluminum vent tape and apply sufficient self-tapping screws.

-Up & out kits have flex already secured to termination cap, do not detach.

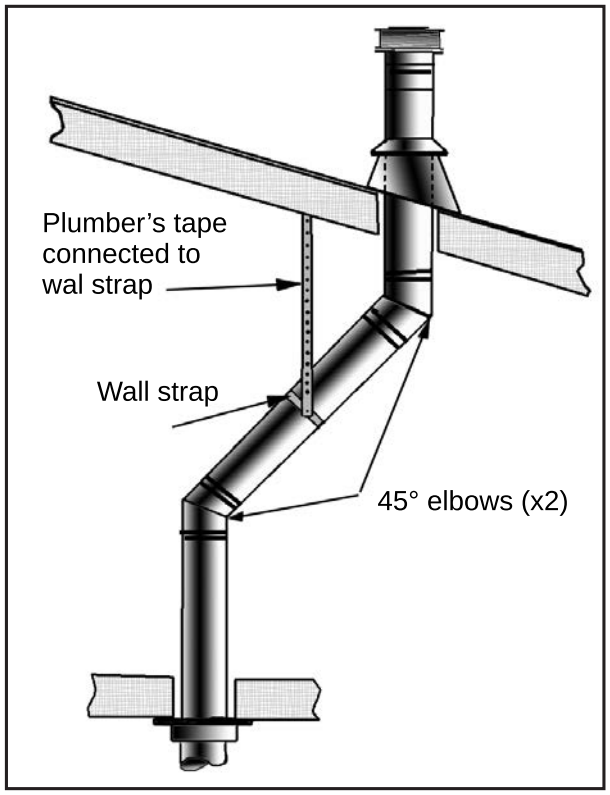

Figure 28: Use of Wall Straps.

(4) Any occupied areas above the first floor, including closets and storage spaces, which the vertical vent passes through, must be enclosed. The enclosure may be framed and sheet-rocked with standard building materials. However consult the appliance manufactures installation instructions for the minimum allowable clearance between the outside of the vent pipe, and the combustible surfaces of the enclosure. Do not fill any required air spaces with insulation.

NOTES:

(1) If an offset is necessary in the attic to avoid obstructions, it is important to support the vent pipe every **3' (914 mm)**, to avoid excessive stress on the elbows, and possible separation. Wall straps are available for this purpose (see Figure 28).

(2) When ever possible, use 45° degree elbows instead of 90° degree elbows. The 45° degree elbow offers less restriction to the flow of flue gases and intake air.

(3) For multi story installations; a ceiling firestop is required at the second floor, and any subsequent floors (see Figure 29). The opening should be framed to **10" (254 mm)** x **10" (254 mm)** inside dimensions, in the same manner as shown in Figure 21.

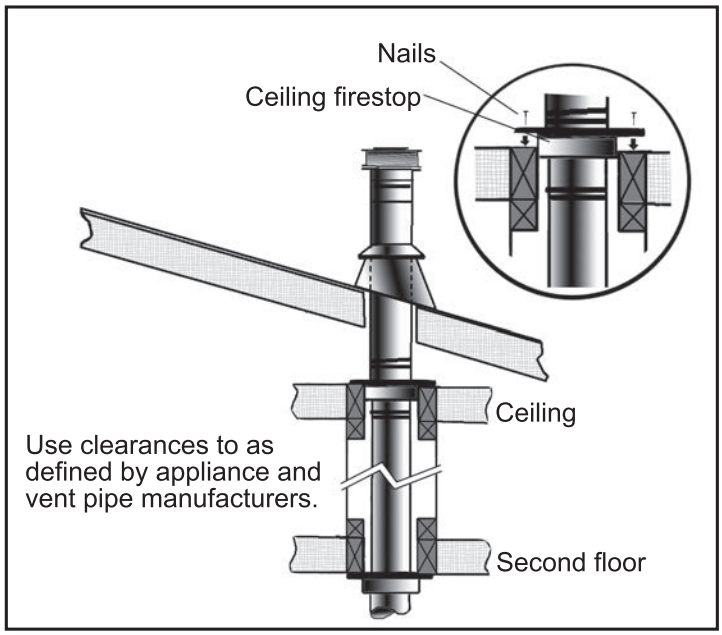

Figure 29: Multi-Story Vent Pipe Installation

Initial Installation

QUALIFIED INSTALLERS ONLY

Gas Line Connection and Testing:

WARNING: Only persons licensed to work with gas piping may make the necessary gas connections to this appliance.

GAS LINE CONNECTION

- This stove is equipped with a certified flexible pipe located on the right side of the unit terminating in a **3/8"** female JIC fitting. Consult your local authorities codes or the CAN/CGA B 149 (1 or 2) installation code in Canada, or in the USA gas installations follow either local codes or the current edition of the National Fuel Gas Code ANSI Z223.1.
- The efficiency rating of this appliance is a product thermal efficiency rating determined under continuous operating conditions and was determined independently of any installed system.

The appliance and its shutoff valves must be disconnected from the gas supply piping system during any pressure testing where the pressure exceeds ½ PSIG (3.45 KPa) or damage will occur to the valve.

The appliance must be isolated from the gas supply piping system by closing its individual manual shutoff valve during any pressure testing of the gas supply piping system at test pressures equal to or less than ½ psig (3.45 KPa).

Always check for gas leaks with a soap and water solution after completing the required pressure test.

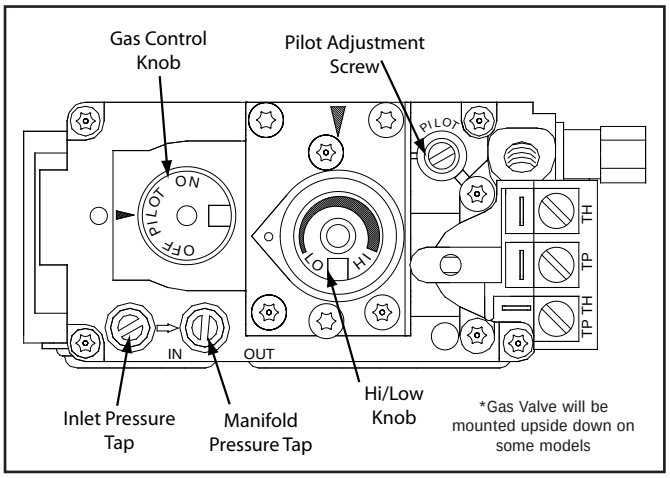

Figure 30: Fully Labeled Gas Valve.

TO TEST VALVE PRESSURES

The pressure taps are located on the top right of the valve shown in Figure 30.

- Turn set screw 1 turn counter clockwise to loosen,
- Place **5/16" (8 mm)** I.D. hose over pressure tap system.
- Check pressures using a manometer.
- When finished, release pressure, remove hose & tighten set screw.

Table 8: Pressure and BTU Information

	Natural Gas	Propane Gas
Main Orifice	#40 DMS	#53 DMS
Manifold Pressure	3.5" W.C. (0.87 KPa)	10.0" W.C. (2.49 KPa)
Min. Manifold Pressure	1.6" W.C. (0.40 KPa)	6.4" W.C. (1.59 KPa)
Max Supply Pressure	7.0" W.C. (1.74 KPa)	11.0" W.C. (2.74KPa)
Min. Supply Pressure	4.5" W.C. (1.12 KPa)	10.4" W.C. (2.59 KPa)
Max BTU/hr Input	24,000 BTU/hr (7.03 KW)	24,000 BTU/hr (7.03 KW)
Min. BTU/hr Input	17,000 BTU/hr (1.12 KW)	17,000 BTU/hr (1.12 KW)

NEVER USE AN OPEN FLAME FOR LEAK TESTING.

QUALIFIED INSTALLERS ONLY

ELECTRICAL REQUIREMENTS:

This **Q2** will operate without external electrical power. This model has a Millivolt gas control which uses the pilot flame to generate enough electricity to operate the main burner. This appliance when equipped with a blower, must be electrically connected and grounded in accordance with local codes or in the absence of local codes, with the current CSA C22.1 CANADIAN ELECTRICAL CODE Part 1, SAFETY STANDARDS FOR ELECTRICAL INSTALLATIONS, OR THE NATIONAL ELECTRICAL CODE ANSI / NFPA 70 in the U.S.

CAUTION: Label all wires prior to disconnection when servicing controls. Wiring errors can cause improper and dangerous operation. Verify proper operation after servicing.

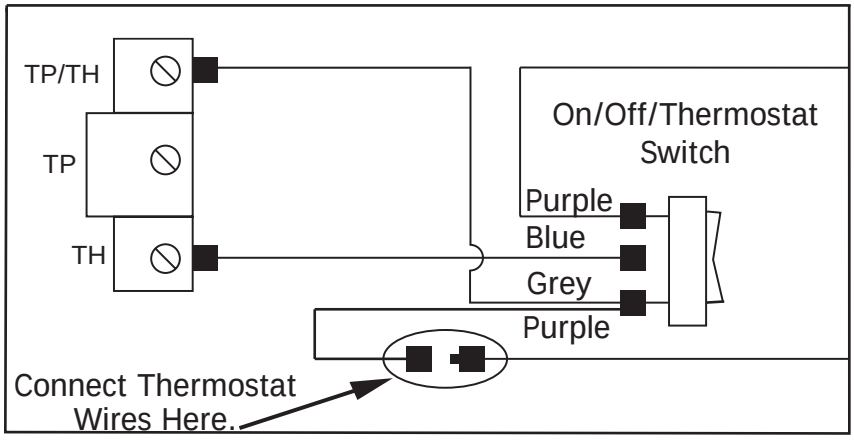

Figure 31: Q2 Wiring Diagram

Table 9: Recommended Thermostat Wire Size

Wire Size	Max. Length
14 gauge	100 ft (30.48 m)
16 gauge	60 ft (18.29 m)
18 gauge	40 ft (12.00 m)
20 gauge	25 ft (7.62 m)
22 gauge	18 ft (5.49 m)

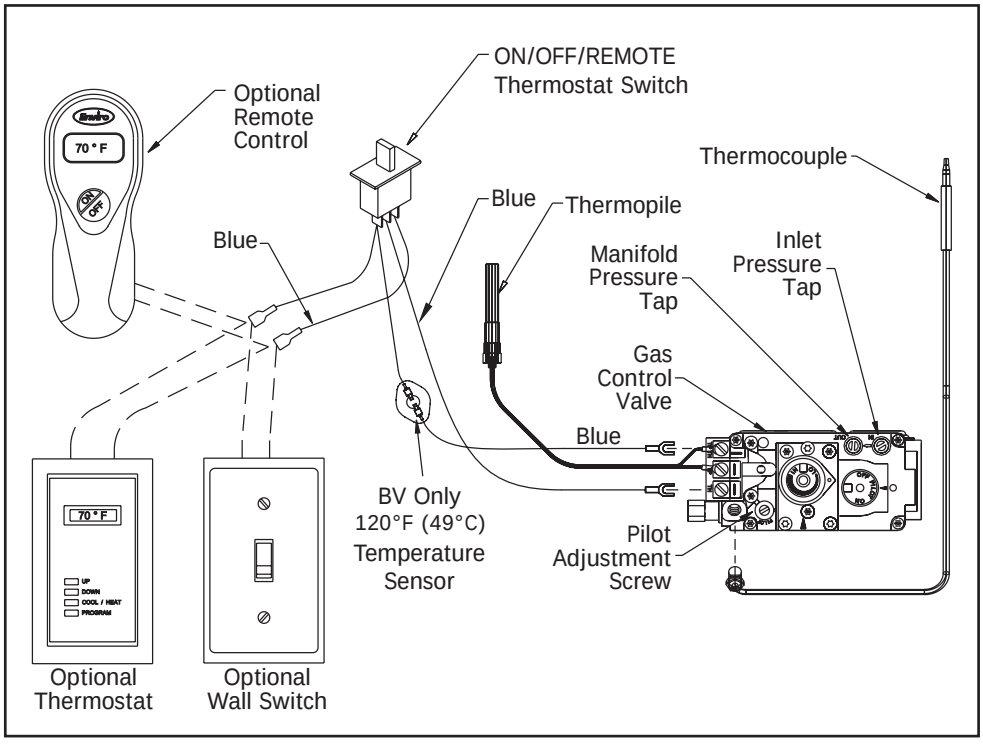

Figure 32: Accessory Wiring

The Q2 comes from the manufacture with an on/off switch mounted to the control panel. If you would like to install a wall mounted switch or thermostat then use the diagram to assist you in wiring the accessory into the unit. Disconnect the connection behind the switch in the control panel as tap into the (2) terminals as shown in figure 32

Optional Thermostat (50-583)

Optional Wall Switch (50-559)

QUALIFIED INSTALLERS ONLY

ELECTRICAL FAN REQUIREMENTS:

Optional Fan Kit (50-2981): The fan will not operate if the appliance is cold. Once the unit is lit and the fan is set to the desired level, the fan will automatically turn on upon reaching operating temperature. The fan will automatically turn off after the appliance has cooled down.

The fireplace must be electrically connected and grounded in accordance with local codes or, in the absence of local codes, with the current CSA C22.1 Canadian Electrical Code Part 1, Safety Standards For Electrical Installations, or The National Electrical Code ANSI / NFPA 70 in the US..

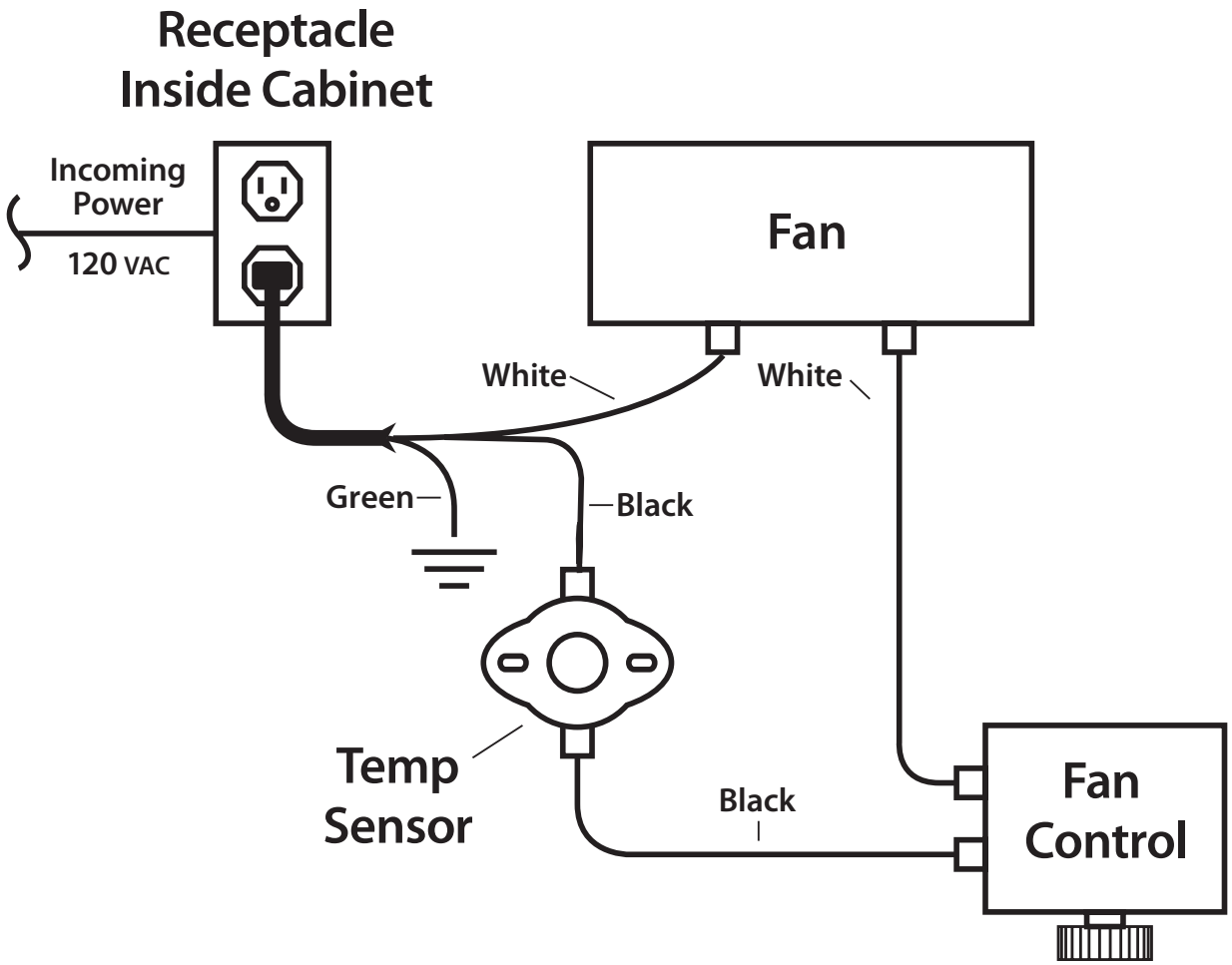

Figure 33: Fan Wiring Diagram

CAUTION: When servicing controls, label all wires prior to disconnection. Wiring errors can cause improper and dangerous operation. Verify proper operation after servicing. If any of the original wire supplied with the appliance must be replaced, it must be replaced with 18 AWG wire with a temperature rating of 105°C.

Secondary Installation

Fan Kit Installation (Optional 50-2981):

This appliance when installed, must be electrically connected and grounded in accordance with local codes or in the absence of local codes, with the current CSA C22.1 CANADIAN ELECTRICAL CODE. Part 1, SAFETY STANDARDS FOR ELECTRICAL INSTALLATIONS, or THE NATIONAL ELECTRICAL CODE ANSI / NFPA 70 in the USA.

CAUTION: Label all wires prior to disconnection when servicing controls. Wiring errors can cause improper and dangerous operation. Verify proper operation after servicing.

Installation of Fan Kit:

1. Remove the contents from the box and inspect for any damage to the fan assembly. If damage is noticed call your nearest ENVIRO dealer. Inspect the wirng harness and ensure it resembles Figure 1.

2. Disconnect the power source that will be coming into the appliance by flipping the circuit breaker to avoid personal injury or damage to the components.

3. Install the fan controller into the control panel as shown in Figure 2. Use the retainer nut to secure the controller. Note: The nut bites into controller shaft without threads.

4a. If the appliance has not yet been installed into a construction enclosure remove the fan cover plate with the (10) screws at the rear of the unit using a 1/4" socket (see Figure 3); slot the fan into the silicone retainers on the opposite side as shown in Figure 4.

4b. If the appliance is already installed into a construction enclosure you will need to consult your Q2 Owner's Manual on how to remove the interior firebox components. Once they are removed see Figure 5 on how to remove the Valve Tray using the (23) T-20 screws. Be careful not to damage the sealing gasket - If gasket gets damaged replace that section with high-temp silicone. Do not completely remove the valve tray just lift it up enough to get the fan inside and mounted onto the silicone gromments as shown in Figure 4.

5. Have a certified electrician bring the power wires in through the electrical box and connect them to the supplied electrical receptacle. Screw the receptacle into the electrical box then install the cover plate. Use the wiring harness to connect all the components together using the diagram shown in Figure 6. It is easiest to wire the temperature sensor together before mounting it in the retainer already installed below the firebox. Ground the green wire to the fan cover using the supplied self tapping screw wherever convenient.

6. Double check to be sure all wiring is correct then replace all components that were disassembled in the previous steps and flip the circuit break to the on position.

7. The fan will not turn on until 120F or 49C has been reached under the fireplace. The fan will continue to run even after the appliance has turned off until the temperature has dropped below the set point (this could be up to 20 minutes after shut down).



Figure 1: Wiring Harness

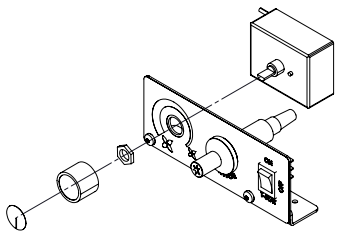

Figure 2: Fan Controller Mounting

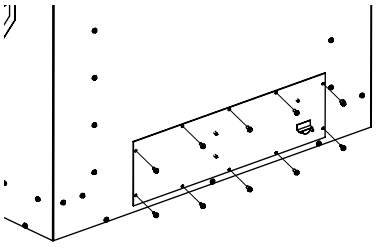

Figure 3: Fan Cover Removal

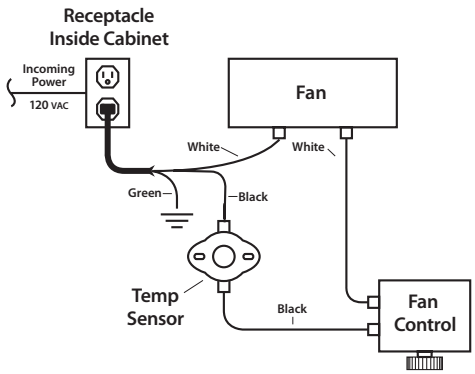

Figure 6: Fan Wiring

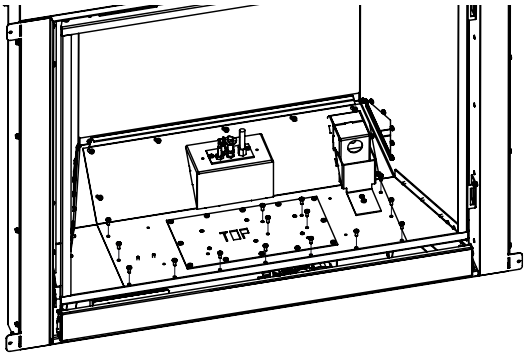

Figure 5: Valve Tray Removal

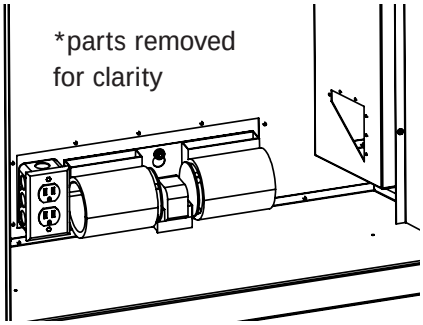

Figure 4: Fan Mounting

Secondary Installation

Panel Installation (Optional):

These instruction are applicable to both the Q2 brick liner set (50-2977) and the Q2 enamel porcelain liner set (50-2978) and the Herringbone Liner Set. (50-3757)

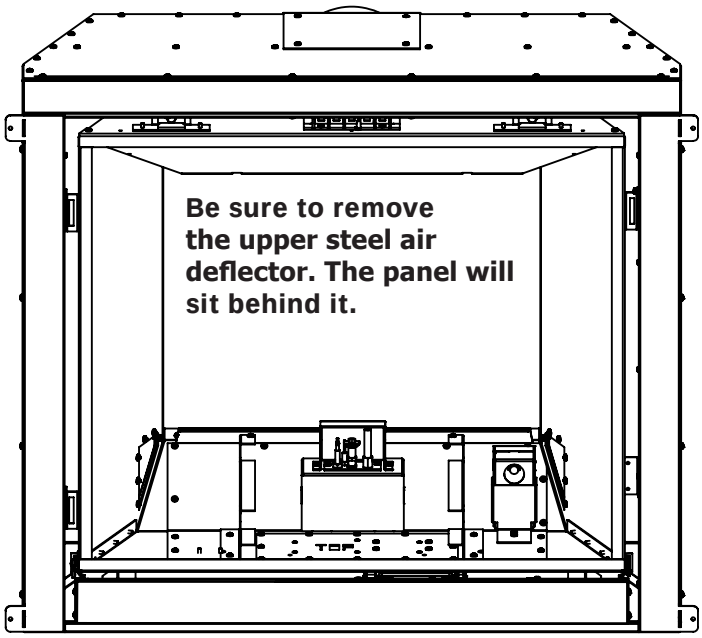

Figure 34. Firebox liner preperation

Step 1: **Be sure the fireplace is cool.** Remove the door, the log set (if installed), log grate, burner tube, and the upper and lower air deflectors. Removal of these parts will be found in the Maintenance and Service section of this manual. Once all required components are removed your appliance should resemble Figure 34.

Step 2: **The panels are delicate so please handle with care.** Remove the panels from their packaging and insert the rear liner first followed by the sides. Hold into position as shown in Figure 35.

Step 3: Screw the (2) retainer brackets into the existing exhaust baffle with the supplied #8 T-20 bolts. Before tightening press the retainer onto the panel firmly. Tighten them once the panels seems to be in the correct position. (See Figure 36)

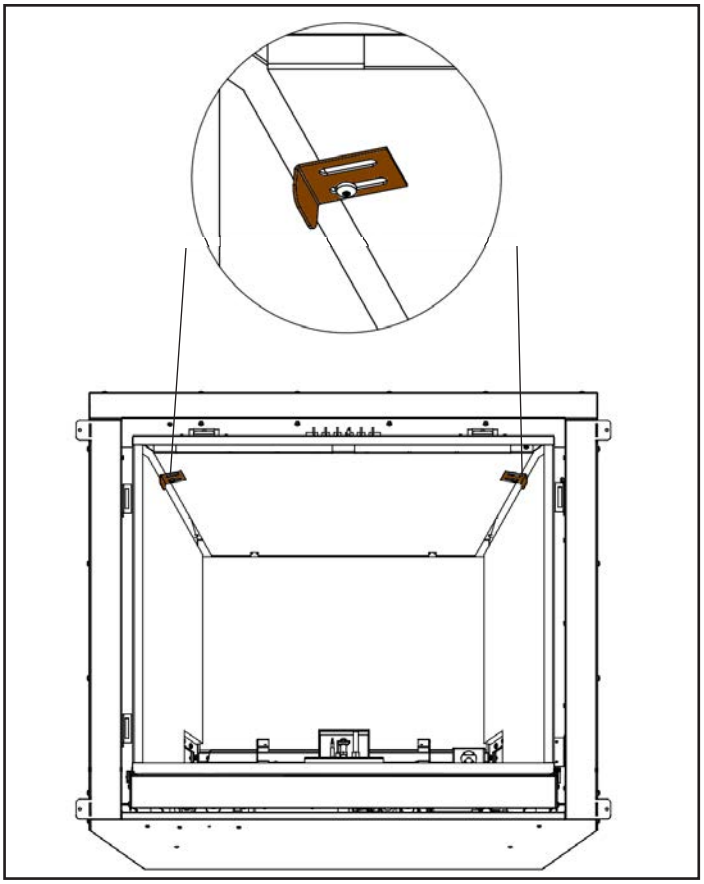

Figure 36. Liner panel retainers

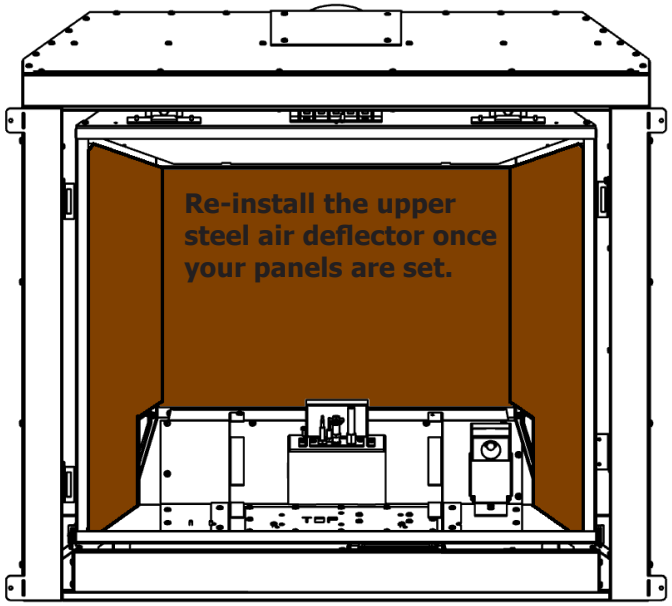

Figure 35. Liner panel position

Secondary Installation

Fire Grate and Log Set Installation:

The placement of the logs is not arbitrary. If they are positioned incorrectly, the flames can be "pinched" and will not burn correctly. All of the logs come with either a notch or ledge to make alignment easier. Using the pictures provided, carefully set the logs in place (see Figures 37 through 41).

NOTE: The logs are fragile and should be handled gently.

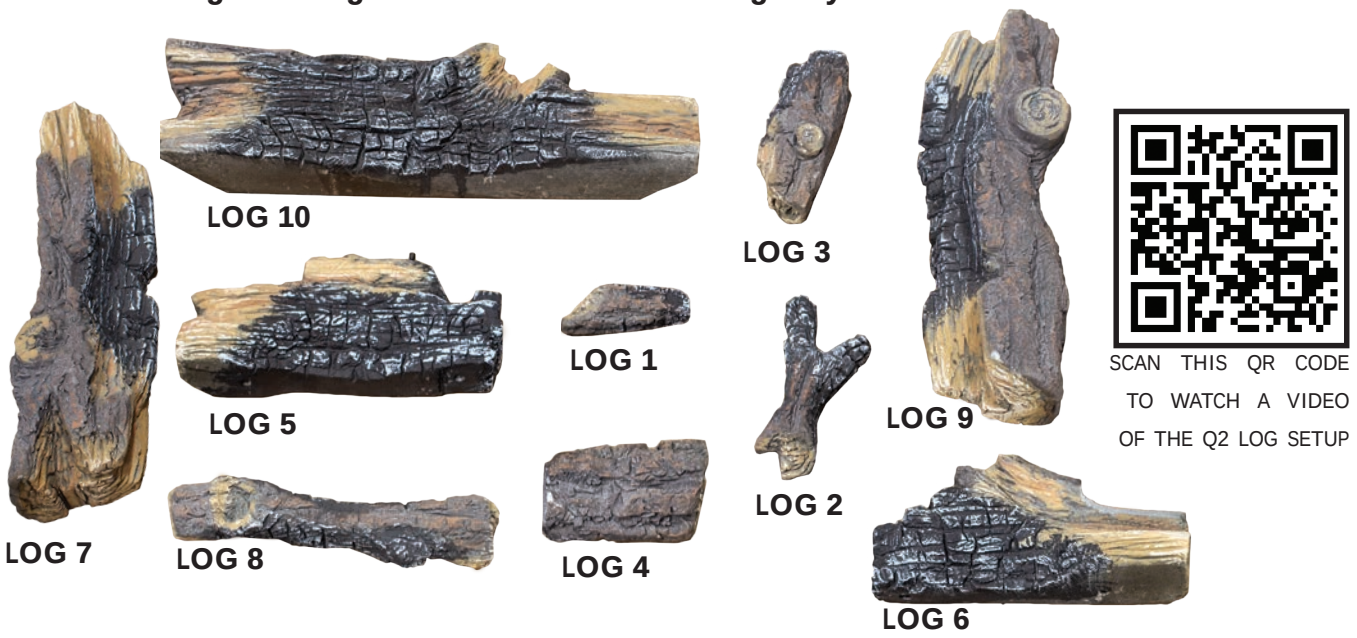

SCAN THIS QR CODE TO WATCH A VIDEO OF THE Q2 LOG SETUP



STEP 1

Place Rear Log #10 on the top ledge of the air deflector.



Step 2

Place both the Left Mid Log #5 and Right Mid Log #6 in the middle of the air deflector. Make sure the bottom holes align with the pins in the air deflector.

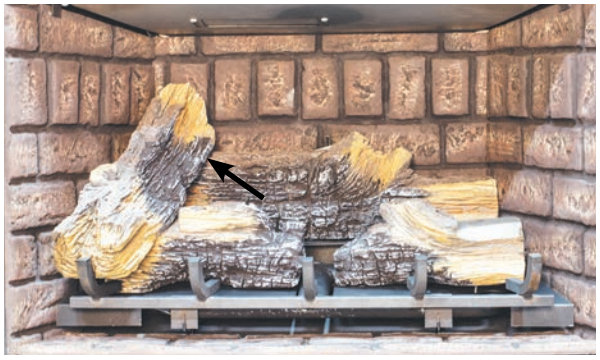

STEP 3

Place Left Top Log #7 to the left, on top of Rear Log #10 and Left Mid Log #5. Locate the bottom notch on far left grate arm.



STEP 4

Place Right Top Log #9 to the right, on top of Rear Log #10 and Right Mid Log #6. Locate the bottom on the far right grate arm.

FIRE GRATE AND LOG SET INSTALLATION-CONTINUED



STEP 5

Break up the ember wool as fine as possible (clump the wool together and separate it using the supplied brush) over the burner tube. It is best to have less ember wool - keep it light and fluffy. Lightly sprinkle strands of Embaglow overtop of the wool. Place coals on the air deflector in front of both mid logs as show. Do Not cover the gaps between the burner and air deflector.

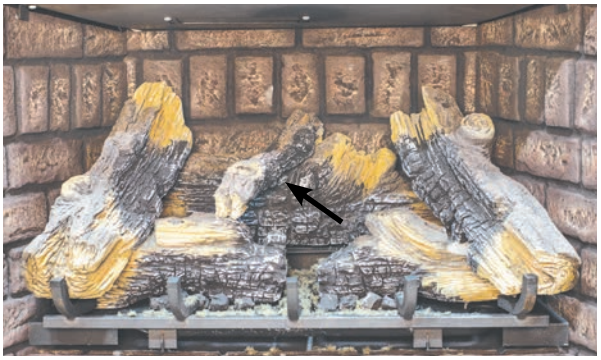

STEP 6

Place Centre Top Crossover Log #8 at an angle on top of the Rear Log #10 and Left Mid Log #5 pins.



STEP 7

Rest Centre Top Log #2 on top of Left Mid Log #5, making sure to align the bottom with the grate arm.



STEP 8

Place Center Front Chunk Log #3 on the log grate, close to the centre, with the front edge resting on Right Mid Log #6.



STEP 9

Place Right Front Chunk Log #4 between the grate arms on the right, with the notch resting on the log grate and the front resting on the burner.

DO NOT COVER ANY BURNER PORTS



STEP 10

Place Left Front Chunk Log #1 between the grate arms under Left Top Log #7, with the front resting on the burner.

Troubleshooting

Problem	Possible Cause	Solution
The main burner does not ignite when called for.	The gas valve may not be on.	• Check that the gas control knob is in the "ON" position.
	Thermostat is not calling for heat.	• Adjust the thermostat several degrees above ambient temperature.
	Problem with gas valve.	• Use a DC voltmeter to measure the voltage across the TPTH and TP terminals. Main operator voltage: Open circuit ≥ 325mV Closed circuit ≥ 100mV • If voltage is not present, check the control circuit for proper operation. • If proper control system voltage is present, replace the gas control.
Spark will not light the pilot after repeatedly pressing the spark ignitor.	Defective piezo ignitor.	• Check connections to ignitor. • If ignitor connections are good but no spark, replace ignitor.
	Broken spark electrode.	• Check for broken ceramic insulation, replace electrode if broken.
	Misaligned spark electrode.	• If spark is not arcing from electrode to pilot, loosen the screws on the pilot base adjust and tighten.
Pilot will not remain lit.	Problem with thermocouple circuit.	• Check for proper connection of the thermocouple to the rear of the valve. If loose, fully tighten. • Check pilot for full flame impingement around thermocouple. If flame is too small, check gas pressure, adjust pilot rate screw, check pilot head for damage. • Check thermocouple voltage at valve. It must be greater than 5 mV. If low, replace thermocouple.
	Air in gas line (pilot dies while knob is depressed).	• Bleed line. • Check gas line pressure. • Contact dealer.
Burners will not remain lit.	Problem with thermopile circuit.	• Check gas line pressure . • Check for flame impingement on thermopile. If low, see "Pilot will not remain lit". • Check thermopile for minimum of 300 mV when burner is switched on. • Check wiring to thermostat for breaks.
Flame lifting	Leak in vent pipe	• Check for leaks in vent connections.
	Improper vent configuration	• Check vent configuration with manual.
	Terminal may be recirculating flue gases	• Check to see if terminal is on correctly. • May need to install high wind termination cap. • Contact dealer.
Glass fogs up	Normal Condition: after the appliance warms up the glass will clear. **Due to additives in gas, glass may get hazy during operation** Clean as needed.	
Blue Flames	Normal during start up: flames will yellow as the fireplace heats up.	
Flames are burning "dirty" or sooting	Flame impingement	• Check log positioning. • Increase primary air by opening the venturi shutter and/ or by opening the vent restrictor. See also "Burners will not remain lit."
Remote control doesn't work	Problem with the remote	• One or more of the batteries are dead. See remote control instructions.
	Problem with fireplace	• The on/off switch is turned to OFF. • The gas control valve is turned to PILOT or OFF. • The pilot has gone out.

Table 10: Q2 Parts List

Reference Number	Part Description	Part Number
1	Door Release Tool	50-2510
2	Convection Fan Only	50-2493
3	FPI Fan Controller (69.5V) 115V W/FS Knob	EC-039A
4	S.I.T. Nova Valve	50-1421
5	Q2L Log Tube Burner	50-3653
6	Door Complete	50-3020
7	Q2 Slim Face W/Screen-	50-3748
8	Q2 Safety Screen	50-3778
9	Q2 Top Framing Plate	
10	120 Degree Fan Temperature Sensor	EC-001
11	S.I.T. Pilot Assembly - Standing Pilot	EC-015
12	High Definition Log Set	50-2979
13	Ceramic Brick Liner Set (3 Pieces)	50-2977
14	Herringbone Liner Set (3 pieces)	50-3757
15	Forgeworks Face - Mignight Bronze	50-3415
16	S.I.T Piezo Igniter	EC-023
-	Black Enameled Steel Liner Set (3 Pieces)	50-2978
-	12 oz. Can of Metallic Black Touch Up Paint	PAINT-12-MB
-	12 oz. Can of Flat Black Touch Up Paint	PAINT-12-FB
-	Door Glass w/ Gasket (28.5 x 23.8in)	50-3021
-	Q2 Conversion Kit NG to LP (For 820 Valve)	50-3035
-	Q2 Conversion Kit LP to NG (For 820 Valve)	50-3034
-	Fan Controller Knob w/Decal	EC-040

Parts Diagram

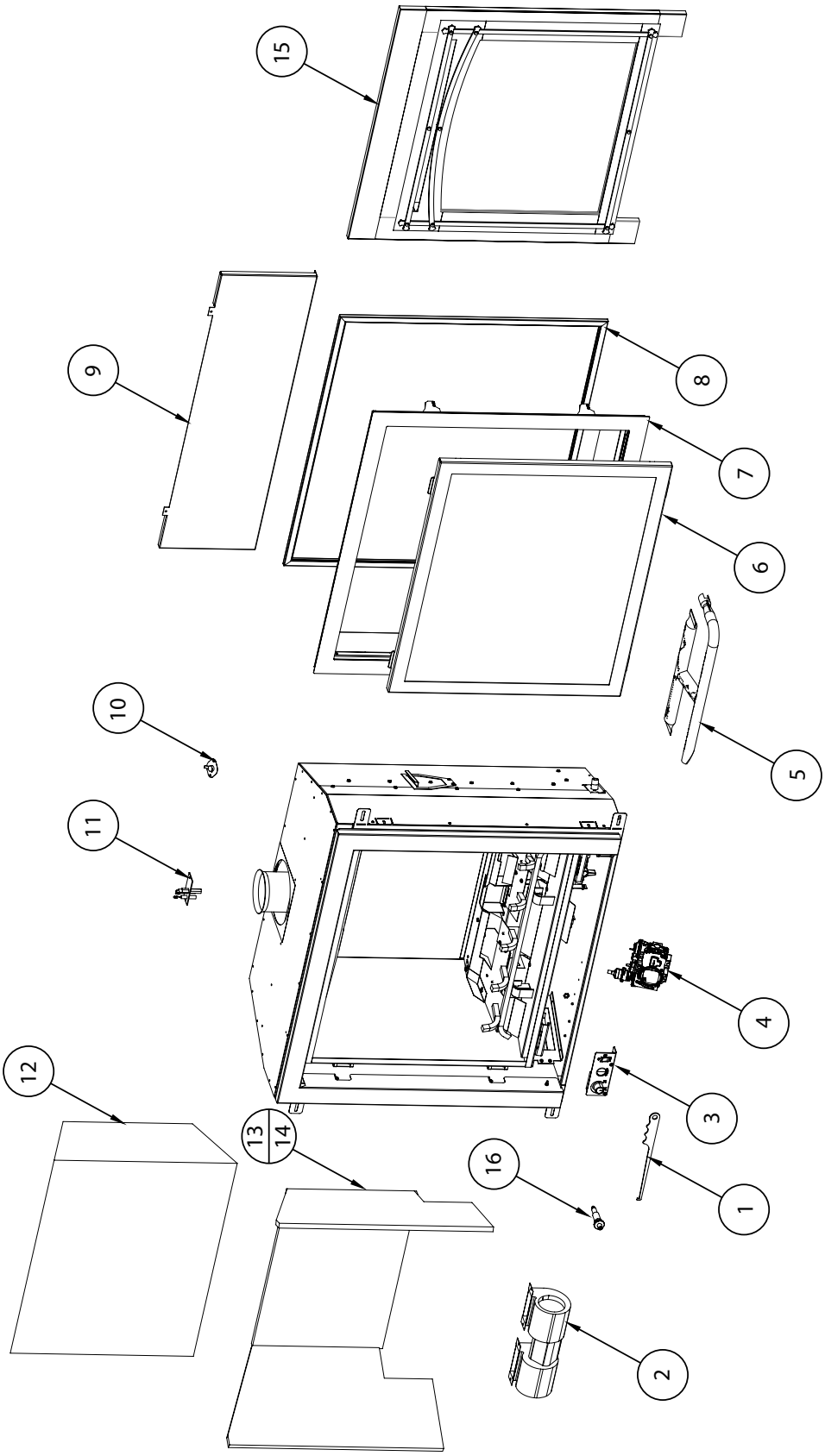

Notes

Notes

Warranty for Enviro **Gas** Products

Sherwood Industries Ltd. ("Sherwood") hereby warrants, subject to the terms and conditions herein set forth, this product against defects in material and workmanship during the specified warranty period starting from the date of original purchase at retail. In the event of a defect of material or workmanship during the specified warranty period, Sherwood reserves the right to make repairs or to assess the replacement of a defective product at Sherwood's factory. The shipping costs are to be paid by the consumer. All warranties by Sherwood are set forth herein and no claim shall be made against Sherwood on any oral warranty or representation.

Conditions

- A completed warranty registration must be submitted to Sherwood within 90 days of original purchase via the online warranty registration page or via the mail-in warranty registration card provided. Have the installer fill in the installation data sheet in the back of the manual for warranty and future reference.
- This warranty applies only to the original owner in the original location from date of install.
- The unit must have been properly installed by a qualified technician or installer, and must meet all local and national building code requirements.
- The warranty does not cover removal and re-installation costs.
- Sherwood Industries Ltd. reserves the right to make changes without notice.
- Sherwood Industries Ltd. and its employees or representatives will not assume any damages, either directly or indirectly caused by improper usage, operation, installation, servicing or maintenance of this appliance.
- A proof of original purchase must be provided by you or the dealer including serial number.
- This warranty does not cover any discoloration of the safety screen mesh.

Exclusions

An expanded list of exclusions is available at www.enviro.com/help/warranty.html

This warranty does not cover:

- Damage as a result of improper usage or abuse.
- Damage caused from over-firing due to incorrect setup or tampering.
- Damage caused by incorrect installation.

To the Dealer

- Provide name, address and telephone number of purchaser and date of purchase.
- Provide date of purchase. Name of installer and dealer. Serial number of the appliance. Nature of complaint, defects or malfunction, description and part # of any parts replaced.
- Pictures or return of damaged or defective product may be required.

To the Distributor

- Sign and verify that work and information are correct.

Sherwood Industries Ltd.
6782 Oldfield Road, Victoria, BC . Canada V8M 2A3
Online warranty registration: www.enviro.com/warranty/

Category	One Year	Two Year	Limited Lifetime (7yr)
Parts [1,2] (unit serial number required)		✔	
Firebox Liner Panels [3]		✔	
Firebox			✔
Heat Exchanger			✔
Burner			✔
Ceramic Logs [4]			✔
Ceramic Glass [5]	✔		
Pedestal / Legs (excluding finish)			✔
Door Assembly			✔
Surround Panels (excluding finish)			✔
Exterior Panels (excluding finish)			Up to 5 years
Electrical Components		✔	
Exterior Surface Finishing	✔		
Labour	✔		

[1] Whereas warranty has expired, replacement parts will be warrantied for 90 days from part purchase date. Labour not included. Unit serial number required.

[2] 50-173 Westport Fan Kit covered for up to 5 years from purchase date. Labour not included. Unit serial required.

[3] Excluding damage to the finish caused by improper setup of the appliance, or color changes.

[4] Log set and panels excludes wear and tear or breakage caused by cleaning or service.

[4] Glass is covered for thermal breakage. Photos of box, inside of door, and unit serial # must be supplied for breakage due to shipping.

[6] Exterior Surface finishing covers plating, enamel or paint and excludes colour changes, chipping, and fingerprints.

Travel costs not included.

Jan 2018

Installation Data Sheet

The following information must be recorded by the installer for warranty purposes and future reference.

NAME OF OWNER:

_____

ADDRESS:

_____

_____

_____

PHONE:_____

NAME OF DEALER:

_____

ADDRESS:

_____

_____

_____

PHONE:_____

MODEL:_____

SERIAL NUMBER:_____

DATE OF PURCHASE: _____ (dd/mm/yyyy)

DATE OF INSTALLATION:_____(dd/mm/yyyy)

☐ NATURAL GAS (NAT) ☐ PROPANE(LPG)

INLET GAS PRESSURE:_____in wc

MAIN BURNER ORIFICE:_____# DMS

PILOT ORIFICE #_____OR_____in diam.

INSTALLER'S SIGNATURE:

_____

NAME OF INSTALLER:

_____

ADDRESS:

_____

_____

_____

PHONE:_____

MANUFACTURED BY:
SHERWOOD INDUSTRIES LTD.
6782 OLDFIELD RD. SAANICHTON, BC, CANADA V8M 2A3
www.enviro.com
February 2019
C-15720