* This manual is to remain with the owner

Warnock Hersey Certified

INSTALLATION AND OPERATING INSTRUCTIONS

ENVIRO GAS

MODEL EFG BAY
FIREPLACE INSERT AND FREESTANDING
VENTED ROOM HEATER

FOR USE WITH NATURAL GAS OR PROPANE

WARNING: If the information in this manual is not followed exactly, a fire or explosion may result causing property damage, personal injury or loss of life.

FOR YOUR SAFETY

- **DO NOT** store or use gasoline or other flammable vapors and liquids in the vicinity of this or any other appliance

- **WHAT TO DO IF YOU SMELL GAS**
  * Open windows.
  * Do not try to light any appliance.
  * Do not touch any electrical switch.
  * Do not use any phone in your building.
  * Extinguish any open flame.
  * Immediately call your gas supplier from a neighbor's phone. Follow the gas supplier's instructions.
  * If you cannot reach your gas supplier, call the fire department.

Installation and service must be performed by a qualified installer, service agency or the gas supplier.

WARNING: Improper installation, adjustment, alteration, service or maintenance can cause property damage, personal injury or loss of life. Refer to this manual. For assistance or additional information, consult a qualified installer, service agency or the gas supplier.

TABLE OF CONTENTS

	Page
Caution	3
Specifications	4
Appliance Certification	4
Dimensions	5
Heater Installation Clearances	6
Description of Heater	7
Control Functions	9
Deciding Where to Locate Your Freestanding Heater	10
Installation Precautions	11
Installation Instructions	12
Gas Connections	14
Venting	15
Removal and Replacement of Glass Door	17
Logs, Twigs and Ember Placement	18
Fireplace Insert Faceplate Installation	20
Operation	21
Thermostat and Remote Control	23
Maintenance	24
Servicing	26
Electrical Connections	27
Trouble Shooting the Heater	28
Appendix A	31
Warranty	32
Installation Data Sheet	33

JUNE 1994

Congratulations and thank you for selecting the Envirogas model EFG BAY gas heater.

Please carefully read these instructions prior to installation and operation of the heater. If properly installed and operated, this heater will provide you with years of safe, trouble-free service and enjoyment.

If you have any questions please contact your dealer.

CAUTION

Due to high temperatures, the heater should be located out of traffic and away from furniture and draperies .

Children and adults should be alerted to the hazards of high surface temperature and should stay away to avoid burns or clothing ignition.

Young children should be carefully supervised when they are in the same room as the heater.

Clothing or other flammable material should not be placed on or near the room heater.

Any grill, panel, log or glass door removed or open for servicing of the heater must be properly replaced prior to operating the heater.

Installation and repair should be done by a qualified service person. The heater should be inspected before use and at least annually by a qualified service person. More frequent cleaning maybe required due to excessive lint from carpeting, bedding material, etc. It is imperative that the control compartments, burners and circulating air passageways of the heater be kept clean.

ENVIROGAS MODEL EFG BAY VENTED ROOM HEATER

SPECIFICATIONS

Input : Nat. and LPG. Maximum - 35,000 Btu/hr (10.3 kW)
Minimum - 15,000 Btu/hr (4.4 kW)

Manifold Gas Pressure : Nat. - 3.5 in.w.c. (0.87 kPa)
LPG. - 10.0 in.w.c. (2.49 kPa)

Output : Nat. - 76% of input with convection blower on and 74% of input blower off.
LPG. - 77% of input with convection blower on and 75% of input blower off.

Minimum Permissible Gas Supply Pressure : Nat. - 4.5 in.w.c. (1.12 kPa)
LPG. - 10. 5 in.w.c. (2.62 kPa)

Orifice Size : Nat. - #32 , LPG. - #51 .

Electrical rating : 120 Vac, 60 Hz, less than 2 A.

HIGH ALTITUDE INSTALLATION

The above ratings are for installation of the heater at 0 - 4,500 ft. (0 - 1370 m) above sea level in the US and Canada.

In the US, the installation of this heater above 4,500 ft (1370 m) shall be in accordance with local codes or, in the absence of local codes, with the current National Fuel Gas Code, ANSI Z223. 1.

In Canada, this heater is tested and listed to CAN/CGA-2.17-M91 for installation at 2,000 - 4,500 ft. (610 - 1370 m) with no changes to the heater's input rating of 35,000 Btu/hr (10.3 kW) maximum. The installation of this heater above 4,500 ft (1370 m) shall be in accordance with local codes or, in the absence of local codes, with the current CAN1-B149 Installation Code.

APPLIANCE CERTIFICATION

This gas appliance was tested and certified by Warnock Hersey, a nationally recognized testing and certification agency, to the following standards:

ANSI Z21.11.1- 1991, Vented Room Heaters
CAN 1-2.1 - M86, Vented Room Heaters
CAN/CGA-2.17 - M91, Gas-Fired Appliance for Use at High Altitudes

This appliance is certified for installation anywhere in the United States and Canada. If you have any questions regarding the certification of this appliance, please contact Warnock Hersey or Sherwood Industries.

DIMENSIONS

FREESTANDING ROOM HEATER

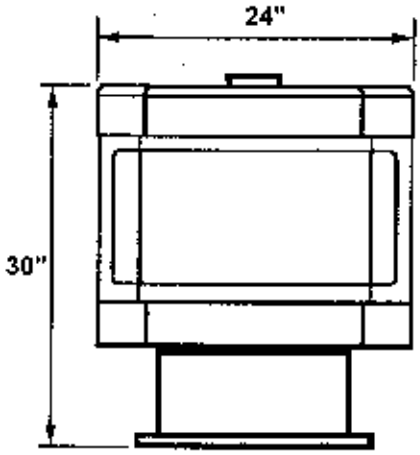

FRONT VIEW

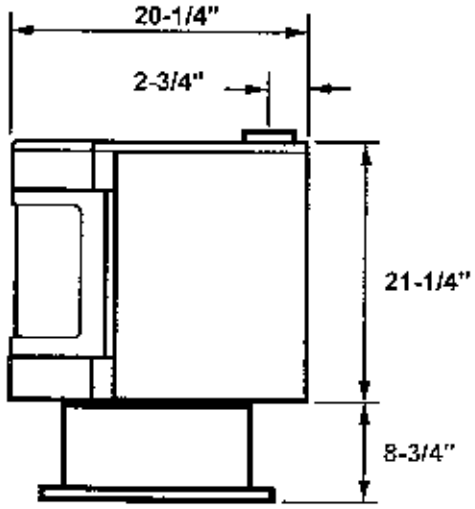

SIDE VIEW

FIREPLACE INSERT ROOM HEATER

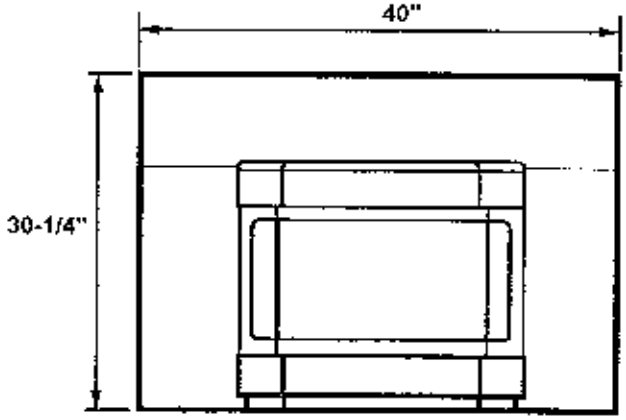

FRONT VIEW

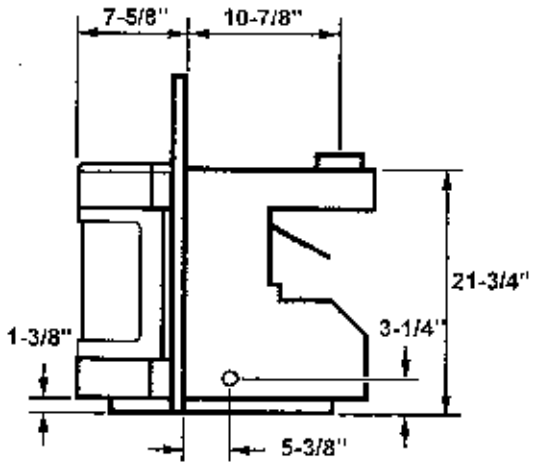

SIDE VIEW

HEATER INSTALLATION CLEARANCES

FREESTANDING HEATER

Side wall to heater	A - 9" (220 mm)	Minimum width	D - 42" (1029 mm)
Back wall to heater	B - 4" (98 mm)	Minimum height	E - 60" (1470 mm)
Adjacent wall to heater	C - 4" (98 mm)	Maximum depth	F - 48" (1176 mm)

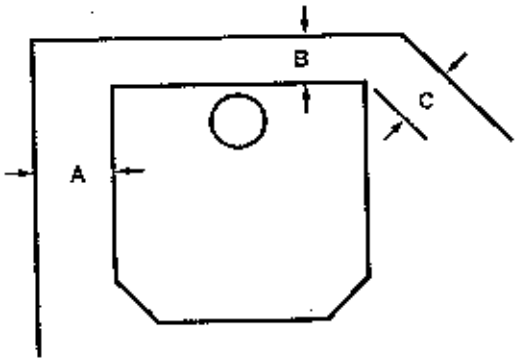

TOP VIEW

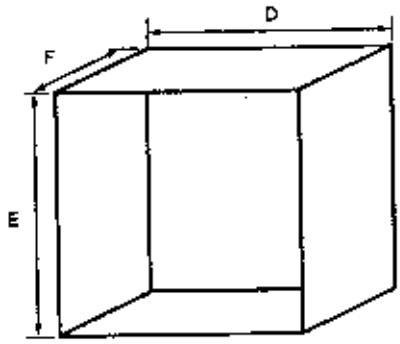

ALCOVE

NOTE: These are minimum clearances. Please make allowances for proper installation and servicing of the heater. When the heater is installed directly on carpeting, tile or other combustible material other then wood flooring, the heater must be installed on a metal or wood panel extending at least the full width and depth of the heater.

FIREPLACE INSERT HEATER

Side wall or combustible pillars to heater	G - 9"	(220 mm)
Combustible mantle to heater	H - 36"	(882 mm)
Maximum Combustible mantle protrusion	I - 6"	(147 mm)

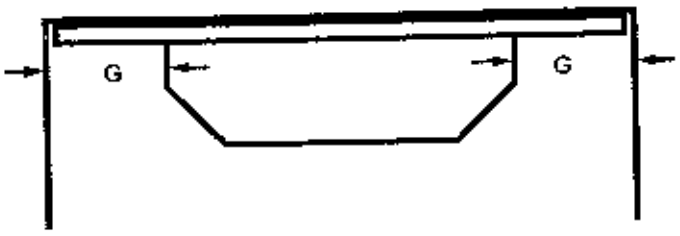

TOP VIEW

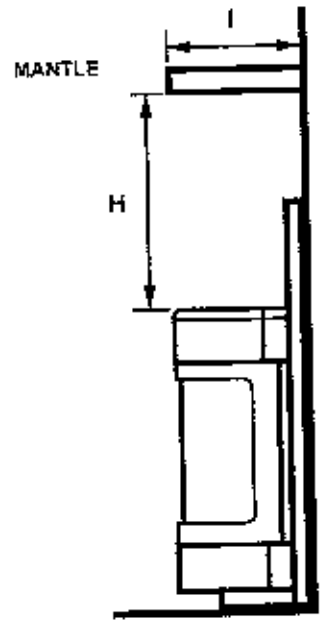

SIDE VIEW

NOTE: The flooring directly beneath the heater must be of non-combustible material.

DESCRIPTION OF HEATER

FREESTANDING HEATER

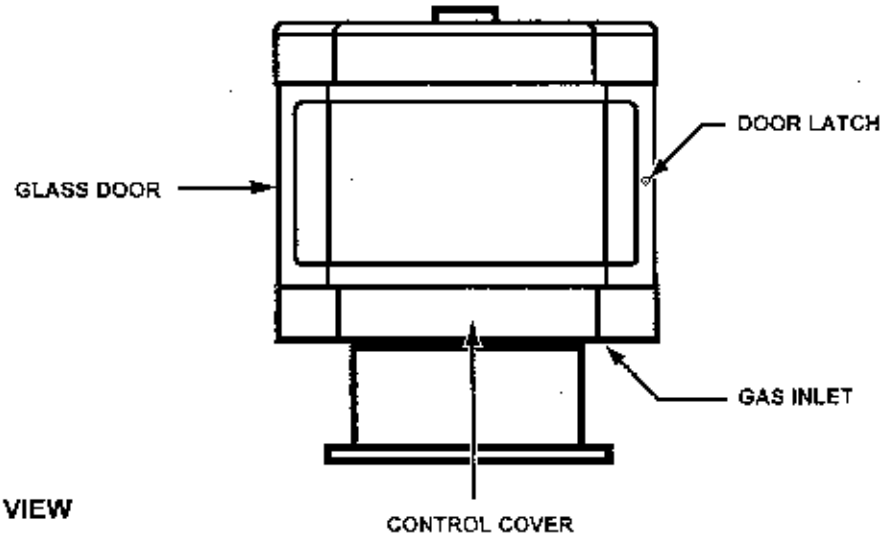

FRONT VIEW

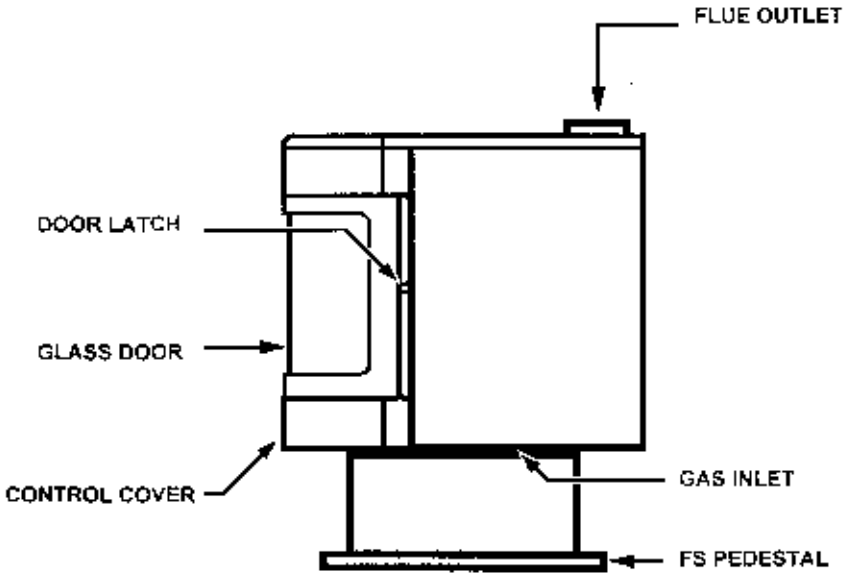

SIDE VIEW

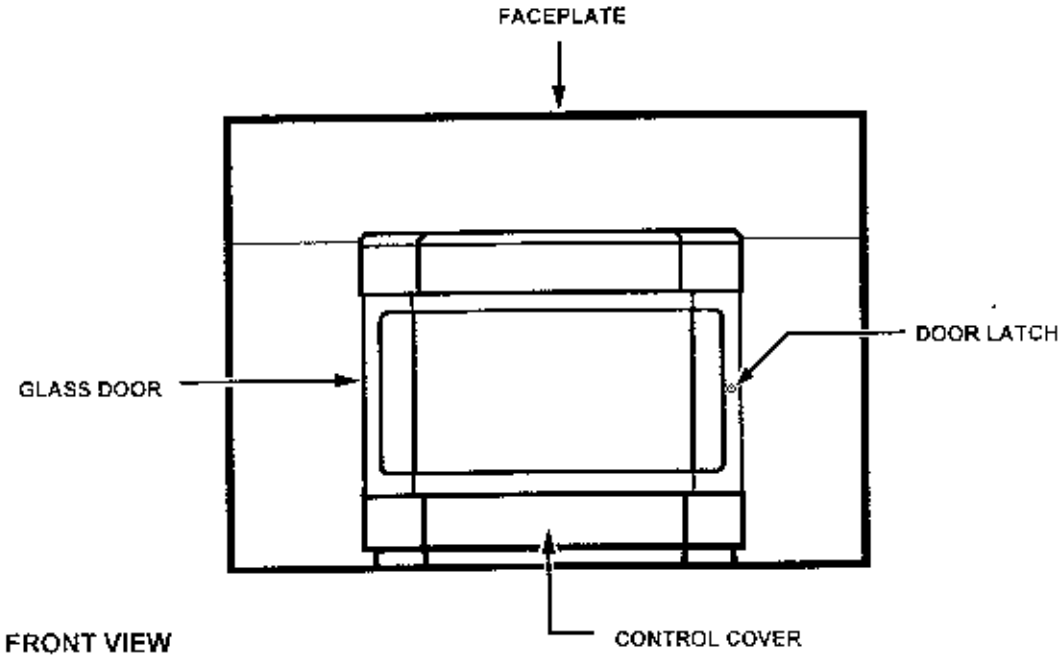

FRONT VIEW

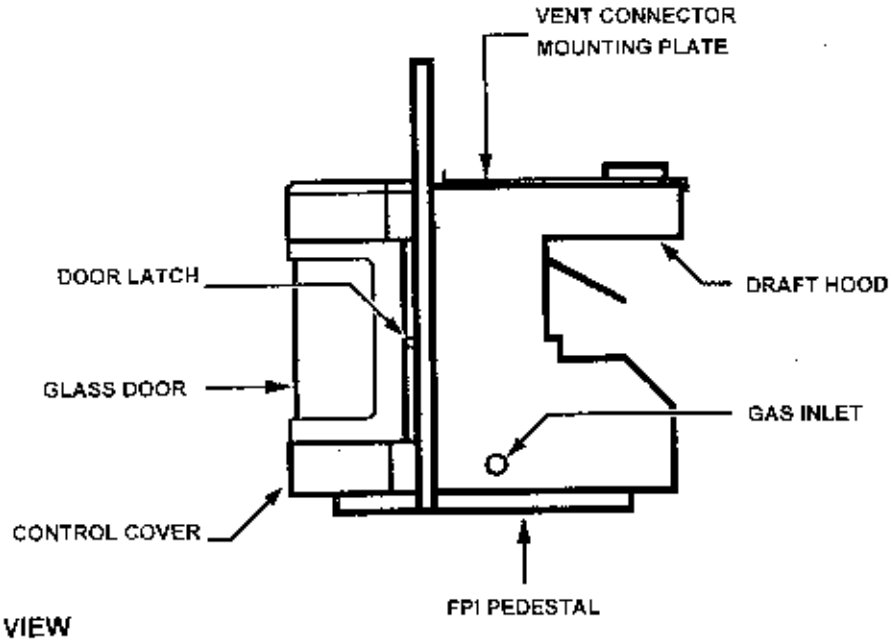

SIDE VIEW

The blower control is used to adjust the convection air output.

The spark ignitor is used to generate sparks for lighting the pilot.

The main gas control of the heater. It controls gas to the pilot and the burners. This control is used only during initial start-up and complete shut-down of the heater. Once the pilot is set, the heater is operated with the switch.

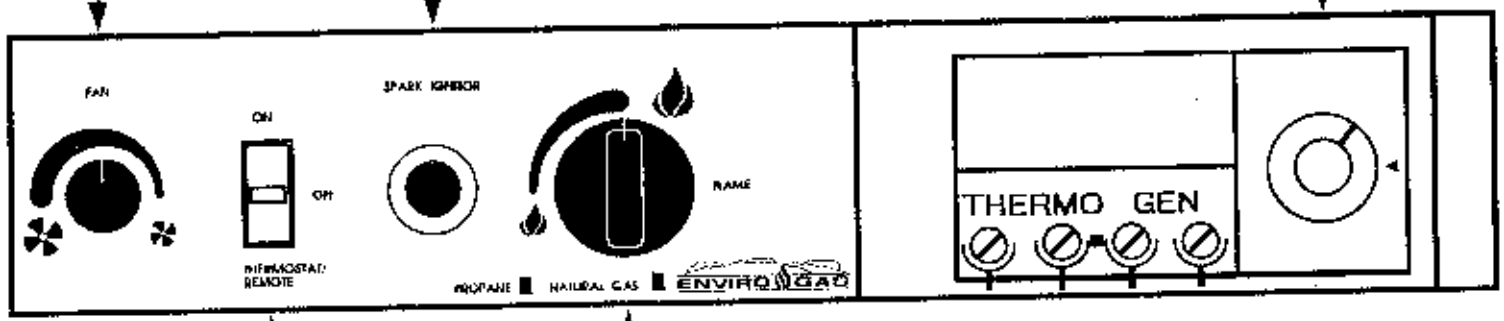

After the pilot is lit and the main gas control is set to ON, the switch is used to turn the heater on, off and thermostat/remote control.

The flame control is used to adjust the size of the flame. It maybe used for aesthetic reasons, or to adjust the heat output of the heater.

DECIDING WHERE TO LOCATE YOUR FREESTANDING HEATER

1. The heater should be located out of traffic and away from furniture and draperies.

2. Locate a position where the flue system of the heater can be properly installed without damaging the integrity of the building, e.g. cutting wall or ceiling joists.

3. Check heater and flue system clearance requirements. For heater installation clearances, see HEATER INSTALLATION CLEARANCES. Flue system clearances are provided by the flue system manufacturer.

4. Locate the heater where it can be accessed by a gas supply line.

5. Locate the heater in a large and open room that is centrally located in the house. This will optimize heat circulation and distribution.

6. As the heater is equipped with a convection blower, ensure that an electrical outlet is within 6 ft. (1.8m) of the heater.

INSTALLATION PRECAUTIONS

The installation should be done by a qualified installer.

WARNING: Improper installation, adjustment, alteration, service or maintenance can cause property damage, personal injury or loss of life.

The installation must conform with local codes or, in the absence of local codes, with the current National Fuel Gas Code, ANSI Z223.1 in the US and CAN1-B149 Installation Code in Canada.

This appliance needs fresh air for safe operation and must be installed so there are provisions for adequate combustion and ventilation air.

This heater must be properly connected to a venting system.

The convection blower is equipped with a flexible service cord with a three prong (grounding) plug for your protection against shock hazard and should be plugged directly into a properly grounded three-prong receptacle. Do not cut or remove the grounding prong from this plug. Do not run the cord under the heater or position it in any way that might damage the insulation of the cord.

INSTALLATION INSTRUCTIONS

1. Install the pedestal to the heater.

Freestanding:

- remove the FS pedestal from the box,
- remove the heater from the box,
- carefully place the heater on its back side,
- note the location of the screw holes on the pedestal, one at the front center and two at the back left and right side.
- align the screw holes to the bottom of the heater and secure the pedestal to the heater with the three T20 TORX screws provided with pedestal.

Fireplace Insert:

- remove the FPI pedestal from the box,
- remove the heater from the box,
- carefully place the heater on its back side,
- note the location of the screw holes on the pedestal, two at the front left and right side
- and one at the back center.
- align the screw holes to the bottom of the heater and secure the pedestal to the heater with the three T20 TORX screws provided with pedestal.

2. Position the heater in the desired location. Make sure the minimum heater clearance requirements are satisfied. See HEATER INSTALLATION CLEARANCES.

3. Make allowances for adequate access for proper servicing and installation of the heater.

5. Freestanding:
When the heater is installed directly on carpeting or other combustible material other than wood flooring, the appliance must be installed on a metal or wood panel extending the full width and depth of the heater. Make sure the floor under the heater is sufficiently rigid and sound.

Fireplace Insert:
The floor directly under the heater must be of non-combustible material.

6. Mark the locations for the flue pipe (Freestanding) and gas inlet.

7. Run a gas supply line to the heater. The gas supply line should be properly sized and fitted, in accordance with the local, state/provincial or national codes, by your gas supplier or a qualified gas fitter.

At this time, a 1/8 in. N.P.T. plugged tapping, accessible for test gauge connection, and a gas manual shut-off valve should be provided immediately upstream of the gas supply connection to the heater.

8. The freestanding heater is designed for venting with certified 4" type B gas vents.
The fireplace insert heater can be vented using a combination of 4" aluminum or stainless flexible vents and type B gas vents.

Select a suitable venting configuration for the heater. Some basic venting configurations are provided in VENTING. Please check the local codes for the suitability of these configurations. The venting configuration must be in accordance with local, state/provincial or national codes. Purchase the required parts and follow the vent manufacturer's installation and assembly instructions.

9. **Connect the gas supply line to the heater** as shown in GAS CONNECTIONS.

10. Freestanding:

Securely fasten the heater to the floor after installing the venting system and the gas **connection.** Two holes located at the back of the pedestal is provided for this purpose. The **heater** maybe screwed down or bolted down, depending on the floor material.

Fireplace insert:

The bottom of the insert pedestal must be level with the front of the hearth so convection air intake through the pedestal is not obstructed. The shimming of the heater maybe required.

11. Prepare the heater for operation.

- Remove any packaging material, tape or loose notices from the outside of the heater.
- Unlatch the glass door and carefully open the glass door. See REMOVAL AND REPLACEMENT OF GLASS DOOR.
- Remove the packaged logs, twigs and embers from the firebox. Remove any packing material or debris from the firebox. Vacuum or clean the pilot and the burners.
- Carefully unpack the logs, twigs and embers and position them according to LOGS, TWIGS AND EMBER PLACEMENT.
- If required, clean the glass on the interior side of the door.
- Replace and re-latch the door.

12. If a thermostat or remote control is be used, see THERMOSTATS and REMOTE CONTROLS, for installation procedures.

13. Clean the exterior of the heater. See MAINTENANCE.

NOTE : If finger prints and smudges are not removed prior to initial operation of the heater, they may be permanently baked on.

14. Have the installer fill-in the INSTALLATION DATA SHEET located at the back of this manual. This information is required for warranty and future reference.

GAS CONNECTIONS

Gas connections must be installed according to local, state/provincial or national codes.

There should be adequate clearance for proper installation and checking of gas connections.

A 1/8 in. N.P.T. plugged tap, accessible for test gauge connection, and a manual gas shut-off valve must be provided immediately upstream of the gas supply connection to the heater.

Check the heater to make sure it is of the correct gas type used. Gas type markings are located on the control panel and on the label.

The heater is already fitted with a 1/2 in. N.P.T. elbow on the gas regulating valve. A stainless steel flexible gas appliance connector is strongly recommended for connecting the heater. The flexible connector is passed through the hole on the side of the firebox on the fireplace insert heater and through the hole on the bottom of freestanding heater. Make sure to obtain a 3/8" or 1/2" connector with the correct length and connecting ends. The heater is connected to a 1/2" male N.P.T. end.

The heater must be isolated from the gas supply piping system by closing its individual manual gas shut-off valve up stream of the heater during any pressure testing of the gas supply piping system at test pressure equal to or less than 1/2 psig (3.5 kPa). At test pressures in excess of 1/2 psig (3.5 kPa), the heater and its individual shut-off valve must be disconnected from the gas supply piping system .

All connections must be checked for gas leaks with a soap solution or any suitable test method.

Use a test gauge to check for proper inlet gas supply pressure.

Minimum permissible gas supply pressure:	Nat. - 4.5 in.w.c. (1.12 kPa) LPG. - 10.5 in.w.c. (2.62 kPa)

CAUTION: Gas supply pressure should never exceed 1/2 psi. or 14.0 in.w.c. (3.5 kPa), otherwise, the heater's combination valve will be damaged and need to be replaced. Such damage is not cover under the manufacturer's warranty.

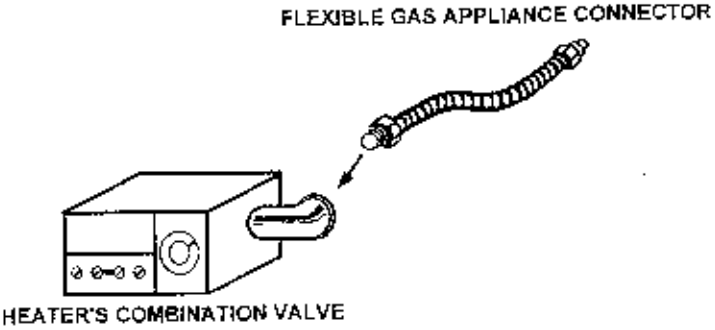

VENTING

This heater must be properly connected to a venting system. This heater is equipped with a vent safety shut-off system designed to protect against improper venting of combustion products.

The gas heater must not be connected to a chimney flue serving a separate solid fuel burning appliance.

WARNING: Operation of this heater when not connected to a properly installed and maintained venting system or tampering with the vent safety shutoff system can result in carbon monoxide (CO) poisoning and possible death.

The freestanding heater should be vented by certified 4" Type B gas vents. If the freestanding heater is connected to a masonry chimney, the chimney should be lined with 4" aluminum or stainless steel flexible vent or 4" Type B gas vent.

The fireplace insert heater maybe vented by 4" aluminum or stainless steel flexible gas vent, or a combination of flexible and 4" Type B gas vents.

The venting system should be assembled and installed according to the vent manufacturer's instructions and the local, state/provincial or national codes.

See vent manufacturer's instructions for vent system clearances to combustibles and vent terminal clearances from roof. See APPENDIX A for some of the manufacturer's general venting guidelines.

Two basic freestanding venting configurations:

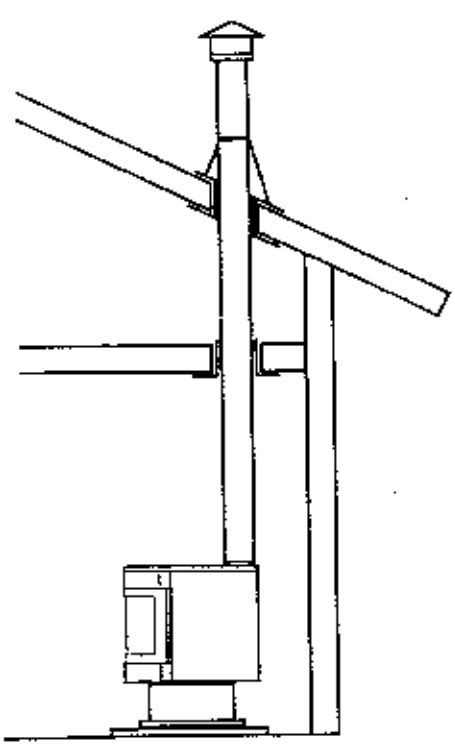

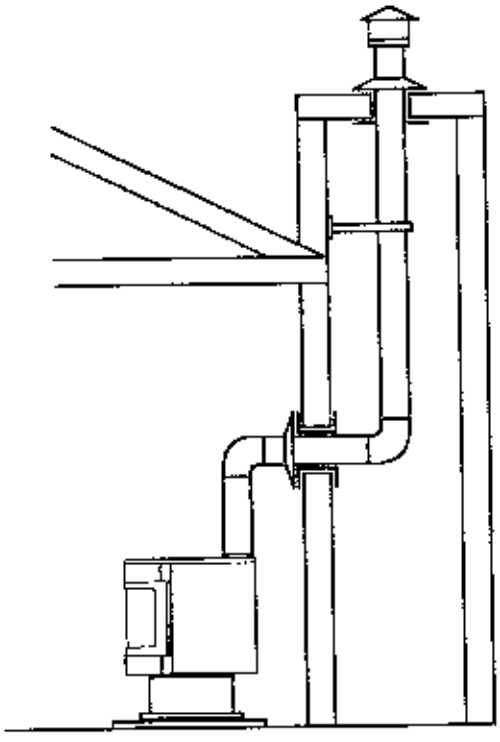

Basic Fireplace Insert Heater Installation:

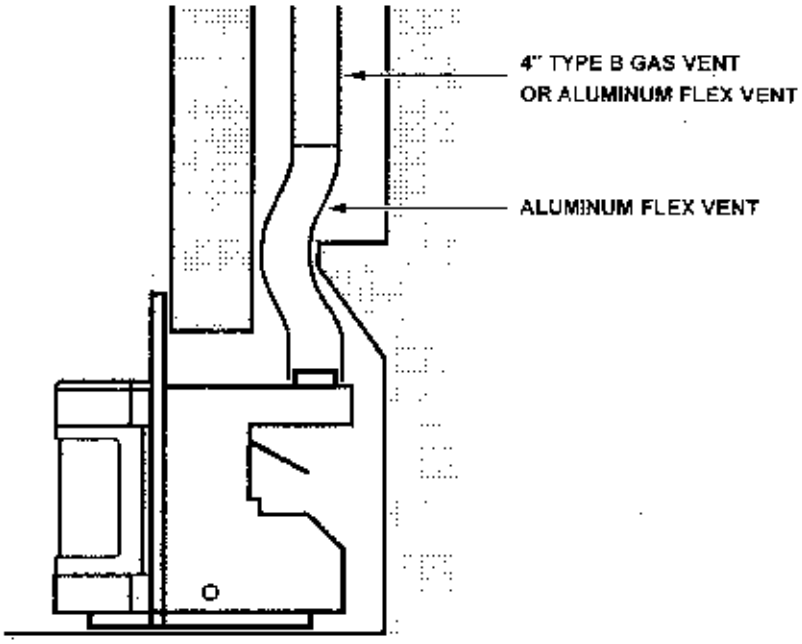

The fireplace insert heater is equipped with a detachable vent connector for the ease of installation.

- Detach the vent connector mounting plate by removing the T25 TORX screw on top.
- Slide the mounting plate backward until the plate unhooks at the back.
- Fasten the flexible vent to the mounting plate.
- When the heater is connected to the gas line and it is ready for final positioning, place the mounting plate on top of the draft hood.
- Slide the heater into the fireplace as you grab onto the mounting plate. Make sure the plate is re-hooked at the back and the T25 TORX is properly replaced.
- Install the faceplate (see FIREPLACE INSERT FACEPLATE) and slide the heater in the rest of way into the fireplace.

NOTE: The venting system of the freestanding and fireplace insert heater must be correctly terminated with a suitable vent cap for the heater to function properly. See vent manufacturer's instructions and the local or national installation codes.

REMOVAL AND REPLACEMENT OF GLASS DOOR

To Open the Glass Door:

1. Locate the latch bolt on the right side of the door between the door frame and the faceplate (fireplace insert model) or between the door frame and the side panel (freestanding model).
2. Place a 1/2" wrench on the latch bolt and rotate counterclockwise several times to loosen the bolt completely.
3. Open the control cover and support the door at the bottom.
4. Carefully swing open the door. Keep the bottom of the door supported to prevent the door from scratching the paint at the bottom of the door.

To Close the Glass Door:

1. Open the control cover and support the door at the bottom.
2. Keep the bottom of the door supported to prevent the door from scratching the paint at the bottom of the door. Carefully swing the door closed.
3. Line-up the latch bolt on the right side of the door to the bolt hole on the faceplate (fireplace insert model) or on the side panel (freestanding model).
4. Start the latch bolt into the bolt hole with your fingers until finger tight.
5. Place a 1/2" wrench on the latch bolt and rotate clockwise several times to tighten the bolt. **DO NOT OVER TIGHTEN.**

To Remove the door:

1. Open the door and swing the door completely open.
2. Support the door at the bottom and carefully lift the door up and away from the hinge.

To Replace the door:

1. Support the door at the bottom and position the door in the completely open position.
2. Line-up the two hinge pegs on the left side of the door frame with the two hinges on the left side of the stove.
3. Drop the hinge pegs into the hinges on the stove.

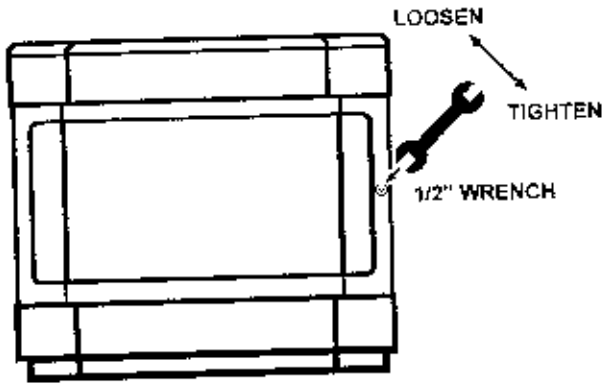

OPERATION OF DOOR LATCH BOLT

LOGS, TWIGS AND EMBER PLACEMENT

The logs and twigs are very fragile. Please minimize handling and handle them very carefully.

The heater comes with the following pieces:



FRONT LOG



BACK LOG



Y TWIG



X TWIG



EMBERS

Installation of the logs:

1. Identify the front and back logs.
2. Place the back log on the back log support as shown. Make sure the flat side of the back log is firmly against the back of the firebox.
3. Place the front log on the front log support as shown. Make sure the flat side of the front log is firmly against the back of the front log supports.

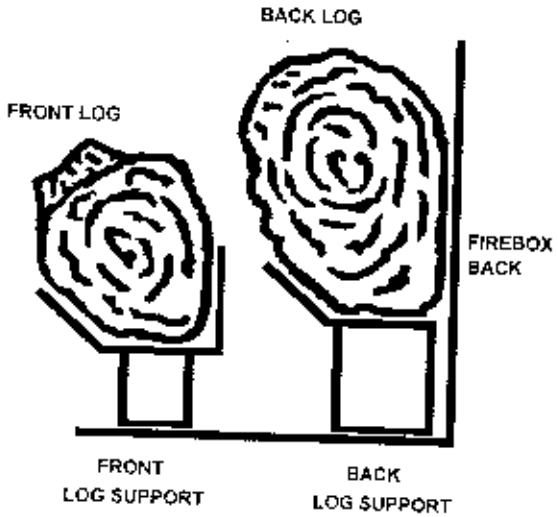

4. Place the Y twig on the left side of the logs.
5. Place the X twig on the right side of the logs.

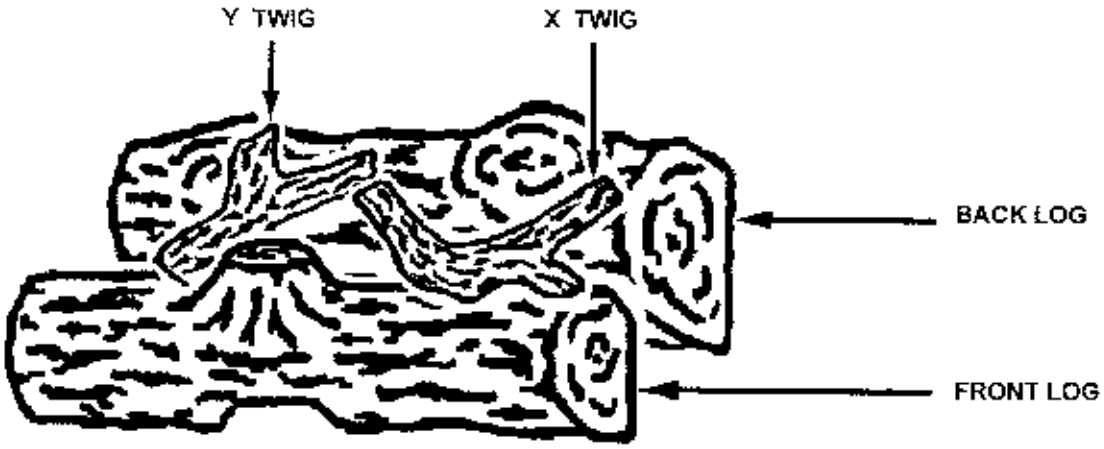

For best performance and to minimize carbon build up on the logs, place the twigs as shown.

WARNING: Do not allow the twigs to fall between the logs.

Placement of Embers:

1. Remove the simulated embers from the plastic bag provided.
2. Break the wade of embers into small pieces of approximately 3/4" in diameter.
3. Place the pieces between the grate and the metal shelf provided.

WARNING: Do not place embers on the burner.

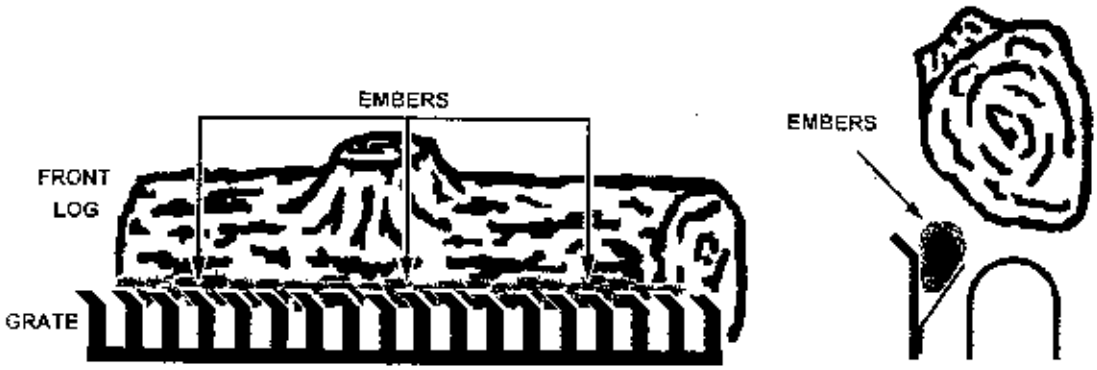

FIREPLACE INSERT FACEPLATE INSTALLATION

The fireplace insert faceplate is package separate from the heater. Unpack the faceplate parts and make sure all the parts are there.

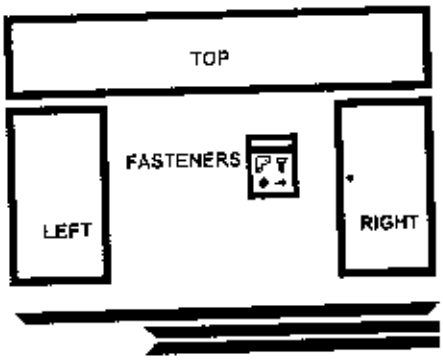

BRASS TRIM

After connecting the heater to the gas line and it is ready for final positioning and connection to the venting system, install the faceplate.

To Install the Faceplate:

1. Screw the faceplate sides to the side of the heater.
2. Attach the vent connector mounting plate with the venting system to the heater. (See VENTING)
3. Install the faceplate top. Make sure the tab on the vent connector mounting plate fits into the slot at the bottom center of the faceplate top. Using a nut and bolt set, fasten the faceplate top to the faceplate sides as shown and tightened.

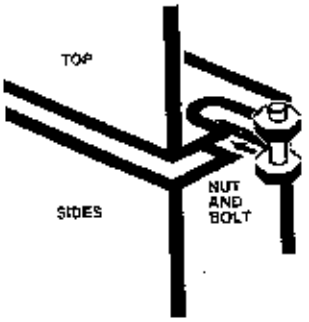

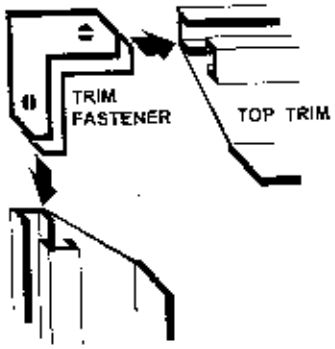

SIDE TRIM

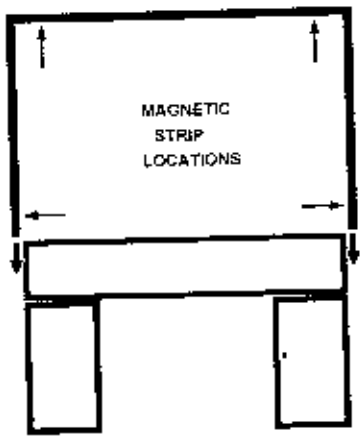

BRASS TRIM ONTO FACEPLATE

4. Install the brass faceplate trim.
   - There are two sets of trim fasteners. A fastener set consists of a "L" shape bracket with set-screws and a "L" shape backing plate.
   - Insert the fasteners with the backing plate into the mitered ends of the trims. Match the miter and tighten the set screws on the fasteners.
   - Stick the adhesive backed magnetic strips on the inside of the brass trim. One on each side trim near the bottom and one near each end of the top trim.
   - Slide the trim assembly onto the faceplate from the top as shown.
5. Slide the heater into the fireplace.

OPERATION

The logs, twigs and embers must be properly positioned as shown in LOGS, TWIGS AND EMBER PLACEMENT.

The glass door must be in place and properly latched.

NOTE: When new, the logs, twigs, embers and paint need to be "cured". Odor and fumes will be emitted by the heater during the first few times of operation. The room should be well ventilated. Open all windows. The logs and twigs may also darken or turn black during the first few times of operation.

DO NOT use this heater if any part has been under water. Immediately call a qualified service technician to inspect the heater and to replace any part of the control system and any gas control that has been under water.

********** **FOR YOUR SAFETY READ BEFORE LIGHTING** **********

WARNING: If you do not follow these instructions exactly, a fire or explosion may result causing property damage, personal injury or loss of life.

BEFORE LIGHTING, smell all around the heater for gas. Be sure to smell next to the floor, because some gas is heavier than air and will settle on the floor.

*** IF YOU SMELL GAS, FOLLOW THE INSTRUCTIONS ON THE COVER OF THIS MANUAL.**

Lighting Instructions:

1. Open the control cover located under the glass door. The cover can be opened by gripping the ends of the cover and flipping it forward toward you.

2. Turn off the blower by rotating the blower knob completely counterclockwise  until it clicks.

3. Set the switch to the OFF position.

4. Push in the gas control knob slightly and turn it clockwise  to OFF.

NOTE: The knob cannot be turned from PILOT to OFF unless it is pushed in slightly. Do not use excessive force.

5. Wait five (5) minutes to clear out any gas. If you smell gas, **STOP!** and follow the instructions on the cover of this manual. If you don t smell gas, go to the next step

6. Push the gas control knob in slightly and turn it counterclockwise  to PILOT.

7. Push in the gas control all the way and hold it in. Immediately press the spark ignitor a few times. Repeat pressing the spark ignitor until the pilot is lit.

NOTE: When first starting the heater, after servicing or if the pilot has been off for an extended length of time, it may take several tries to light the pilot

When the pilot is lit, continue to hold the control knob in for about 30 seconds. Release the knob and it will pop back up. The Pilot should remain lit. If it goes out, repeat steps 4 through 7.

* If the control knob does not pop up when released, stop and immediately call your service technician or gas supplier.

* If the pilot will not stay lit after several tries Turn the gas control knob to OFF and call your service technician or gas supplier.

8. Turn the gas control knob counterclockwise 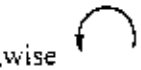 to ON.

9. Set the switch to ON or THERMOSTAT/REMOTE.

10. Adjust the flame to the desired setting by turning the front flame knob.

11. Turn on the blower by turning the blower knob clockwise  to the desired setting.

12. Close the control cover.

To Turn Off Gas to Appliance:

1. If the heater is to be serviced, unplug the heater's power cord.

2. Open the control cover.

3. Push in the gas control knob slightly and turn it clockwise  to OFF. Do not use excessive force.

4. Close the control cover.

OPERATION OF THE CONVECTION BLOWERS

The convection blower of the EFG BAY is fully automatic. The automatic operation of the blower will maximize heating efficiency and minimize condensation in the firebox. Minimizing condensation in the heater will increase durability of the heater and improve cleanliness of the glass.

To operate the convection blower:

Turn the blower control knob clockwise  to the desire speed. The blower will automatically turn on to the set speed when the heater is warmed up. The blower will automatically shut-off when the flame is turned off and the heater cooled down.

NOTE: The blower will not turn on when the heater is cold. The time for the blowers to turn on will vary from 10 minutes to one hour, depending on the flame setting.

THERMOSTAT AND REMOTE CONTROL

This heater may be used with a room thermostat. For best performance, we recommend the use of thermostats designed for millivolt systems.

IMPORTANT: The thermostatic control on this heater operates on its own millivolt system. Do not connect this heater to any higher voltage thermostat system or thermostats servicing any other appliance.

Thermostat and Remote Control Connection:

1. Open the glass door, see REMOVAL AND REPLACEMENT OF GLASS DOOR.
2. Remove the logs and the twigs.
3. Remove the burner tray, see SERVICING.
4. Locate the two purple wires on the right side of the control tray.
3. The ends of the wires are equipped with spade connector sets. Uncouple the loose spade connectors and crimp them to the ends of the thermostat, wall switch or remote control wires.
4. Run the ends of the thermostat wires through the hole on the left side of the firebox.
5. Reconnect the spade connectors.
6. Route and tie down the wires so as to prevent possible damage to the wires. Keep the wire down low on the control tray to prevent heat damage from the burner tray.

Fireplace insert faceplate remote switch:

The fireplace insert heater is equipped with a remote switch located on the top left of the face plate. The switch is equipped with wires and connectors for connecting it to the purple wires of the heater. See instructions 1. to 6. above.

See ELECTRICAL CONNECTION for wiring diagram.

MAINTENANCE

WARNING: All maintenance should be conducted with the unit cool to the touch.

ALWAYS: Keep the exterior of the heater free of dirt or dust

- The exterior paint maybe cleaned with a soft cloth dampened with water
- The exterior of the glass door maybe cleaned with a soft cloth and a suitable glass cleaner.
- Check and clear the grills or openings on the front, sides, back and bottom of the heater of any debris or lint accumulations.
- The fireplace insert heater takes convection air from the bottom of the heater. Keep bottom front of the heater clear of objects, debris or lint accumulations.
- Keep the heater area free from combustible materials, gasoline and other flammable vapors or liquids.

PERIODICALLY (Once or twice a year):

- Inspect and remove any debris on the vent terminal and check the venting system for any blockages.
- Examine the pilot for proper ignition of the burners. The pilot should ignite the burners within 4 seconds of turning on the burners.

NOTE: The following should be conducted an hour after the pilot is shut off.

- Inspect and clear the primary air opening of any debris or lint accumulations.
- Check the glass door for tightness when latched. If the door is loose even after proper latching, the door gasket needs to be replaced.
- Remove the glass door and clean the interior of the glass.
- Inspect the glass retaining gasket and door gaskets for any damages. If they are damaged, replace them.
- Remove the logs and twigs and gently clean any loose carbon deposits off with a soft brush. **This should be done wearing a dust mask outside the house.**

WARNING: The logs are very fragile Use extreme care.

Have a qualified service technician:

- Inspect and clean the burners. Vacuum off any dust or debris on or around the burners and the pilot.
- Clean the convection blower. Remove the convection blower (see SERVICING) and vacuum off any dirt or lint accumulations on the blowers or gently remove them with a soft dry towel.
- Check the flame-failure response time of the valve/pilot system and the vent safety shut-off system.

IMPORTANT: The logs and glass door must be properly replaced after all maintenance and servicing.

SERVICING

WARNING: All servicing should be conducted by a qualified service technician. Improper adjustment, alteration or service can cause property damage, personal injury or loss of life.

Warranty Service

Check the terms of the warranty located at the back of the manual. Contact your Envirogas dealer and provide him with the information on the INSTALLATION DATA SHEET located at the back of this manual.

THE FOLLOWING INSTRUCTIONS ARE FOR THE SERVICE TECHNICIAN.

The heater is designed for ease of servicing. All gas controls, connections and accessories are mounted on a single control assembly tray which can be easily removed for exchange or servicing.

CAUTION: These procedures should be conducted with the heater cool to the touch.

To Remove the Burner Assembly Tray:

1. As the heater is equipped with convection blowers, unplug the power cord to the heater.
2. Shut off gas to the heater using the manual gas shut-off valve.
3. Disconnect the gas supply line to the heater.
4. Open the glass door.
5. Remove the twigs and logs.
6. Remove the log supports.
7. Loosen and remove the two 3/8" hex bolts holding the burner assembly tray. They are located at the left and right sides of the firebox, near the bottom front of the door opening.
8. Grab the sides of the simulated grate, lift up the front of the tray and pull forward until the tray is out of the firebox.

To Replace the Burner Assembly Tray:

The reverse of To Remove the Burner Assembly Tray.

Be sure the tab on end of the burner manifold lines up with the slot on the orifice mounting plate at the back of the firebox. Otherwise, the burner tray will not fit properly and cannot be bolted down at the front.

To Remove the Control Assembly Tray:

1. Locate the wire connections on the left side of the control assembly tray. See ELECTRICAL CONNECTIONS.
2. Disconnect the wire to the vent safety shut-off switch.
3. Disconnect the power cord connection to the control assembly tray.
4. Disconnect the connectors to the blower speed controller.
5. Disconnect the gas connection to the heater combination valve.
6. Loosen and remove the T20 TORX screw at the bottom center of the tray.
7. Lift the tray up and out of the tab located at the front center of the tray.
8. Tilt the left side the tray up and maneuver the tray out of the firebox.

To Replace the Control Assembly Tray:

The reverse of To Remove the Control Assembly Tray.

Primary Air Adjustment:

1. Obtain a 10" or longer 1/4" hex screwdriver.
2. Insert the screwdriver into the opening on the left side of the combination valve.
3. Press the screwdriver against the hex screw located at the back of the manifold.
4. Rotate the hex screw clockwise ↻ to increase primary air.
5. Rotate the hex screw counterclockwise ↺ to decrease primary air.

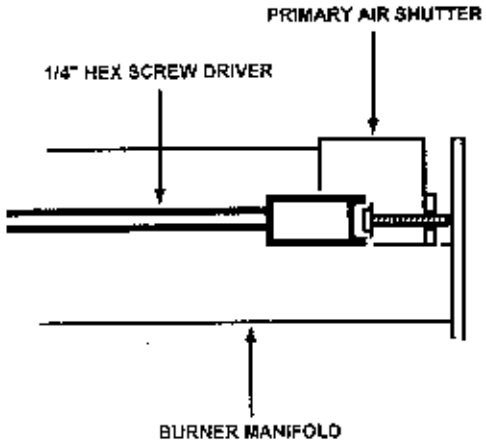

Removal of Blower Assembly:

1. Turn off the heater and disconnect the power cord.
2. Open the glass door. See REMOVAL AND REPLACEMENT OF GLASS DOOR.
3. Remove the burner and control assembly trays. See above.
4. Use a T25 TORX screw driver and remove the six screws holding the blower mounting plate at the back of the firebox.
   NOTE: Spraying penetrating oil on the screws, such as WD-40, will ease their removal.
5. Remove the mounting plate and the attached blower out of the firebox.

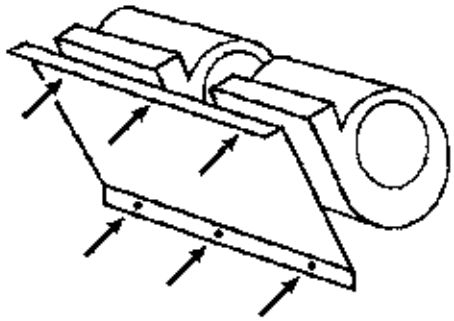

LOCATIONS OF BLOWER MOUNTING SCREWS

Installation of Blower Assembly:

The reverse of Removal of Blower Assembly.

ELECTRICAL CONNECTIONS

GAS CONTROL CIRCUIT

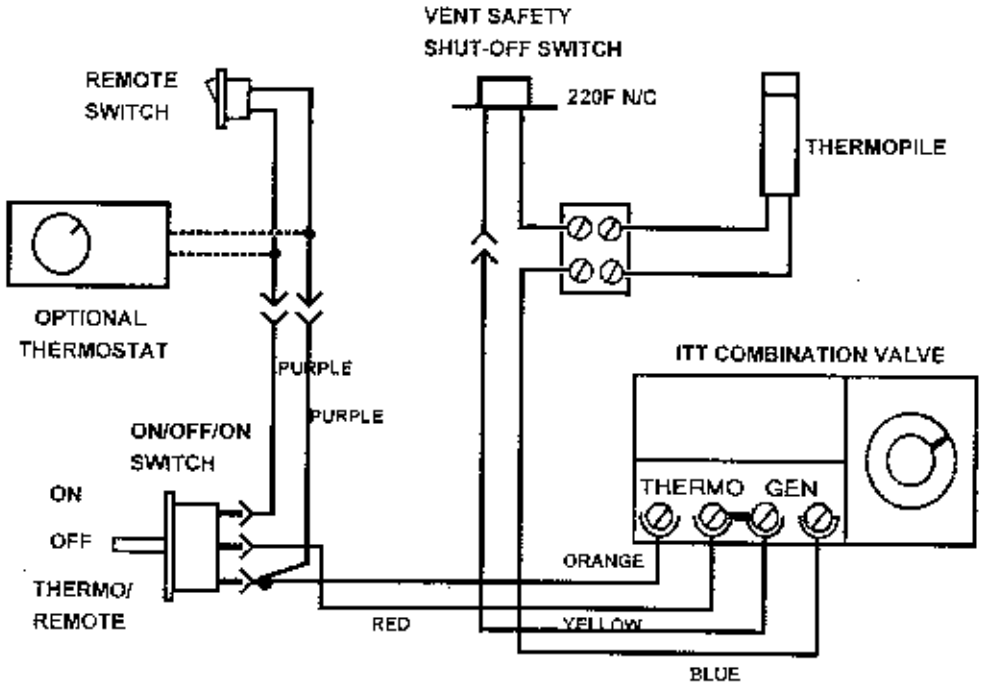

NOTE: The fireplace insert heater is equipped with a remote switch on the faceplate. A remote wall switch can be added to the freestanding stove as an option. If both the remote switch and the thermostat are used, the remote switch must be off for the thermostat to function properly.

CONVECTION BLOWER CIRCUIT

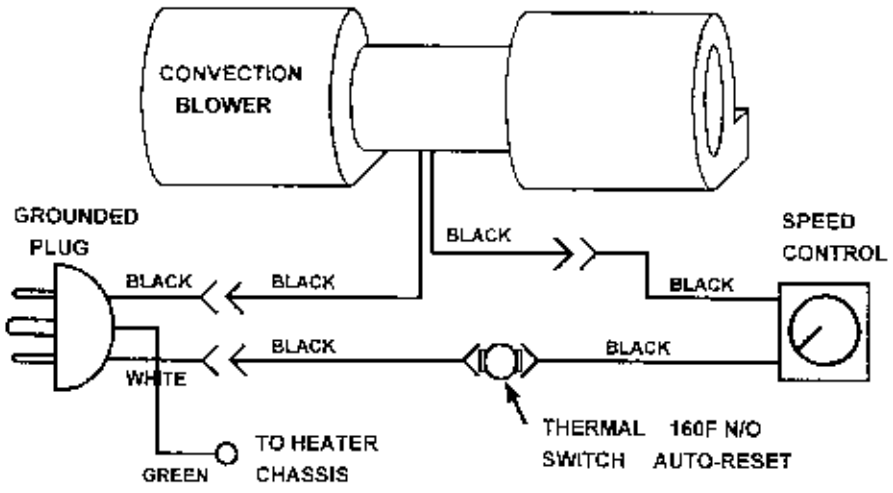

TROUBLE SHOOTING THE HEATER

WARNING: Servicing and trouble shooting of gas controls and high voltage circuits should only be conducted by a qualified service technician.

NOTE: Please make sure the operating instructions are followed carefully and exactly before trouble shooting the heater.

For each problem there are many probable solutions. Conduct each numbered solution until the problem is solved. If no solution can be found or the problem is not listed below, please contact your local Envirogas dealer.

Problem: The spark ignitor will not light the pilot.

Probable Solutions:

1. See if there is a spark at the pilot when the spark ignitor is pressed. If there is no spark,
    a. Check to see if the spark electrode tip is touching the pilot body. If it is touching, carefully bend the tip away from the pilot.
    b. Check for a bad spark ignitor to spark electrode connections.
    c. The spark ignitor is not generating sparks and is defective.
2. Check that the manual gas shut-off valve is on and there is gas pressure to the heater.
3. When first starting the heater, after servicing, or the pilot has been off for an extended length of time, air maybe in the gas lines. You may have to try lighting the pilot several times, until air is bled out of the gas lines.
4. After several tries. If the pilot still will not light, remove the glass door and the front log. Try to light the pilot with a match
    a. If the pilot can be lit by a match, the spark electrode is miss-aligned. Carefully bend the spark electrode tip next to one of the gas ports which surrounds the thermopile.
    b. If the pilot blows on the flame of the match, there is air in the line.
    c. If no gas or air coming out of the pilot, and there is gas pressure to the heater, the regulating valve is defective.

Problem: Pilot will not remain lit.

Probable Solutions:

1. The control knob is not held in long enough after lighting the pilot. Hold in the control knob a bit longer.
2. Check for good blue flames on the small ports surrounding the thermopile.
3. Check for secure wire connections of the thermopile.
4. Check the vent safety shut-off switch wiring. The vent safety shut-off switch circuit is normal closed when the stove is cold.
    a. If the vent safety shut-off switch circuit is open, check the connections and for broken wires.
    b. Check vent safety shut-off switch. If switch is open circuit at room temperature, replace switch.
5. Check output voltage between the two wires of the thermopile, which is connected to the two terminals labeled "GEN" in front of the regulating valve. With the pilot lit, the voltage between the wire should be approximately 400-500 mv. If the voltage is significantly lower or zero,

a. The thermopile wires are short circuited together or to the heater chassis. Check for short circuits.
b. One of the gas control wires is short circuited to the heater chassis Check all gas control wires for shorts.
c. The thermopile is defective.

6. Defective regulating valve.

Problem: The pilot goes out when the stove is warm or hot and can not be re-lit.

Probable Solutions:

1. Check to see if the vent safety shut-off switch is tripped.
   - Disconnect the connectors to the terminals on the valve labeled "GEN".
   - Check for a millivolt reading. If the reading is zero, the vent safety shut-off switch is tripped.

WARNING: If the vent safety shut-off switch continuously trips, there is a venting problem. Have a qualified inspector inspect the vent system. Failure to do so can cause personal injury or loss of life. Do not tamper with the vent safety shut-off switch. If it is defective, it must be properly replaced. Failure to do so can cause personal injury or loss of life.

- If the vent system is checked out to be OK and the vent safety shut-off switch continue to trip regularly, the switch is displaced or defective.

Problem: With the pilot lit, the burners will not turn on when the switch is set to the ON position.

Probable Solutions:

1. Check that the gas control knob is turned completely to the ON position.
3. Let the pilot heat up a bit longer. The thermopile may not be hot enough to generate the voltage needed to turn on the main valve.
4. With the switch set to OFF. Check output voltage between the thermopile wires. The voltage should be 400-500 mv. With the switch set to ON. Check output voltage between the thermopile wires. The voltage should be 200-250 mv.
5. Check for an open circuit in the wiring.
6. Check for a defective switch. Disconnect the red and orange wires from the switch and place a jumper wire between the wires. If the burners turn on, the switch is defective.

Problem: Convection blowers are not working (See OPERATION OF CONVECTION BLOWERS before solving problem.)

Probable Solutions:

1. Check to see if the power cord of the heater is plugged in.

CAUTION: High voltage! Use extreme care.

IMPORTANT: Unplug the power cord before conducting each of the following tests.

2. Check the wall outlet with a suitable AC volt meter for 120 VAC.
3. Check circuit for positive connections.

4. Disconnect the wires to the blower thermal switch mounted on the left side of the heat shield. The heat shield is mounted on the front of the control assembly tray. Place a jumper between the wires. If the blower function properly, the thermal switch is defective.

NOTE: The blower thermal switch is normally open at room temperature and closes when the stove warms up. See OPERATION OF CONVECTION BLOWERS before replacing switch.

5. Disconnect the two black wires of the blower. Connect the blower directly to the power cord. If the blower works, the speed controller is defective, otherwise the blower is defective.

Problem: Delay ignition and flames flash out of firebox

Probable Solutions:

1. Lighting instructions on the control cover or on in the manual under OPERATIONS were not followed exactly.
2. Check the logs are properly placed in the heater as per instructions in LOGS, TWIGS AND EMBER PLACEMENT.
3. Check the pilot flame length. The flame length on both sides of the pilot hood should be 3/4" to 1" long. If the flame length is too short,
   a. Check for proper gas supply pressure to the heater.
   b. Check for proper manifold pressure.
   c. Remove pilot and check for blockage of pilot orifice.
   d. Adjust pilot flame size on regulating valve.
   e. The regulating valve is defective.
4. Check the runner ports on the burners for blockage. The burners have small holes running down the side from the pilot flames to the main burner ports.

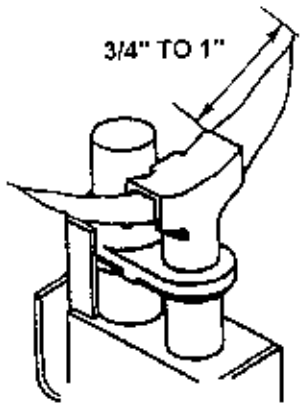

PILOT FLAME LENGTH

APPENDIX A

This information is compiled by the manufacturer as a very general rule for single appliance venting of the EFG BAY gas heater. Venting code and regulations may vary from area to area, so please check with the local, state/provincial codes regarding the suitability of your application. For other special venting requirements, please refer to the local, state/provincial or national codes.

Manufacturer's General Venting Guidelines:

For best venting performance, we recommend total vent height of 10 ft. (3m) to 30 ft. (9m). Total horizontal length depends on the number of elbows used.

- two 90° elbow, maximum total horizontal length of 20 ft. (6 m).
- three 90° elbow, maximum total horizontal length of 13 ft. (3.8 m).
- four 90° elbow, maximum total horizontal length of 6 ft. (1.9 m).
- five 90° elbow, maximum total horizontal length of 1 ft. (0.3 m).

If 45° elbows are used, one 90° elbow is equivalent to two 45° elbows. If practical, it is best to locate the appliance to permit the use of shorter horizontals and fewer elbows.

Connector rise should be minimum of 1 ft. (0.3m).

The bottom of the vent cap should extend at least 2 ft. (0.6 m) above the highest point of the roof where it passes through and at least 2 ft. (0.6 m) higher than any portion of the roof within a horizontal distance of 10 ft. (3 m).

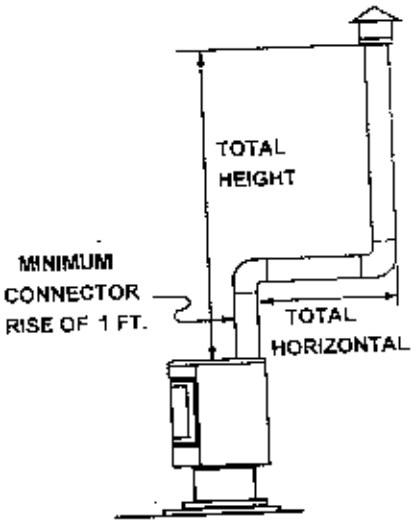

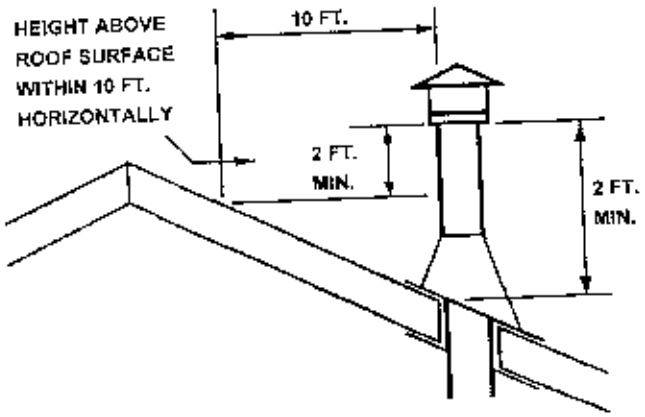

WARRANTY

Sherwood Industries Ltd. gives a five year limited warranty on all steel manufactured parts. A one year warranty is provided on all gas and electrical components. The above limited warranties are extended only to the original purchaser.

There is no warranty on the following parts:

- glass window
- fiberglass rope gaskets
- logs, twigs and ember material
- paint
- trims
- gold plating

All claims forwarded under this warranty shall be made in writing to:

Sherwood Industries Ltd.
6820 Kirkpatrick Crescent
Victoria, British Columbia
Canada, V8X 3X1

When filing a warranty claim, please include the following:

- name, address and telephone number of purchaser, installer and dealer.
- date of purchased
- date of installation
- serial number of the appliance
- nature of complaint, defect, malfunction, etc.

The limited warranty covers defects in materials and workmanship only if the product has been installed according to the manual's instructions. If the product is damaged or broken as a result of misuse or mishandling, the warranty does not apply. The warranty does not cover removal and re-installation costs.

Sherwood Industries Ltd. reserves the right to repair or to replace the defective product. The shipping costs are paid by the consumer. All warranties by the manufacturer are set forth herein and no claim shall be made against the manufacturer on any oral warranty or representation.

Sherwood Industries Ltd. and its employees or representatives, will not assume any damages, either directly or indirectly, caused by improper usage, operation, installation, servicing or maintenance of this appliance.

Sherwood Industries Ltd. reserves the right to make changes without any notice. Please complete and mail the warranty registration card and have the installer fill-in the installation data sheet in the back of the manual for warranty and future reference.

INSTALLATION DATA SHEET

The following information must be recorded by the installer for warranty purposes and future reference.

ENVIROGAS MODEL: _____ EFG BAY FPI Fireplace Insert Heater
_____ EFG BAY FS Freestanding Gas Heater

Serial Number: WH-_____

_____ Natural Gas (Nat.), _____ Propane (LPG).

Name of Owner: _____
Address: _____
City: _____
Country: _____
Zip/Postal Code: _____
Phone: (_____)- _____ - _____

Name of Dealer: _____
Address: _____
_____
_____
Phone: (_____)- _____ - _____
Date of Purchase: _____ / _____ / _____

Name of Installer: _____
Address: _____
_____
_____
Phone: (_____)- _____ - _____
Date of Installation: _____ / _____ / _____
_____ Natural Gas (Nat), _____ Propane (LPG).
Inlet Gas Supply Pressure: _____ in.w.c.
If the regulator was adjusted by the installer.
Manifold Gas Pressure: _____ in.w.c.
If the orifices were changed by the installer.
Burner Orifice # _____
Pilot Orifice #_____ or _____ in. Dia.

Installer's Signature: _____.