SHERWOOD INDUSTRIES IS AN ENVIRONMENTALLY RESPONSIBLE COMPANY
THIS MANUAL IS PRINTED ON RECYCLED PAPER

WARNOCK HERSEY

ENVIRO GAS

EG 32BV

By SHERWOOD INDUSTRIES LTD.

OWNERS MANUAL



WHAT TO DO IF YOU SMELL GAS

- Open windows/Extinguish any open flame
- Do not try to light any appliance.
- Do not touch any electrical switch; do not use any phone in your building.
- Immediately call your gas supplier from a neighbor's phone. Follow the gas supplier's instructions.
- If you cannot reach your gas supplier, call the fire department.

WARNING

If the information in this manual is not followed exactly, a fire or explosion may result causing property damage, personal injury or loss of life. Installation and service must be performed by a qualified installer, service agency or the gas supplier.

FOR YOUR SAFETY
Do not store or use gasoline or other Flammable vapors and liquids in the vicinity of this or any other appliance.

PLEASE KEEP THESE INSTRUCTIONS FOR FUTURE REFERANCE

SAFETY PRECAUTIONS

FOR SAFE INSTALLATION AND OPERATION OF YOUR "ENVIROGAS" HEATER, PLEASE, CAREFULLY READ THE FOLLOWING INFORMATION:

- All "ENVIROGAS" gas-fired appliances must be installed in accordance with these instructions. Carefully read all the instructions in this manual first. Consult the building authority having jurisdiction to determine the need for a permit prior to commencing the installation.

- **NOTE** Failure to follow these instructions could cause a malfunction of the fireplace which could result in death, serious bodily injury, and/or property damage.
- Failure to follow these instructions may also void your fire insurance and/or warranty.

GENERAL

- Installation and repair should be done by a qualified service person. The appliance should be inspected before use and at least annually by a qualified service person. More frequent cleaning may be required due to excessive lint from carpeting, bedding material, etc. It is imperative that control compartments, burners and circulating air passageways of the appliance be kept clean.

- Due to high temperatures the appliance should be located out of high traffic areas and away from furniture and draperies. Children and adults should be alerted to hazards of high surface temperatures and should stay away to avoid burns or clothing ignition.

- Young children should be carefully supervised when they are in the same room as the appliance.

- Clothing or other flammable material should not be placed on or near the appliance.

FOR YOUR SAFETY

- Installation and service must be performed by a qualified installer, service agency or the gas supplier.

- This installation must conform with local codes or, in the absence of local codes with the current CAN/CGA -B149 installation code in Canada or the National Fuel Gas Code ANSI Z223.1 in the USA.

- To prevent injury do not allow anyone who is unfamiliar with the operation to use the stove.

- **To prevent injury, if the pilot or pilot and burners have gone out on their own, open the glass door and wait 5 minutes to air out before attempting to re-light stove.**

- Always keep the area around these appliances clear of combustible material, gasoline or other flammable vapors and liquids.

- These appliances should not be used as a drying rack for clothing or for hanging Christmas stockings or decorations.

- Due to the paint curing on the stove a faint odor and slight smoking will likely be noticed when the stove is first used. Open a window until the slight smoking stops.

- Always connect this gas stove to a vent system and vent to the outside of the building envelope. Never vent to another room or inside a building. Make sure you use the vent pipe that is specified. Make sure that the vent is properly sized and is of adequate height to provide the proper draft. Inspect the venting system annually for blockage and any signs of deterioration.

- **Do not operate with cracked or broken glass. Under no circumstances should this appliance be modified. Parts that have to be removed for servicing must be replaced prior to operating this appliance. Only parts supplied by Envirogas should be used in this appliance and replacements should only be performed by a licensed or qualified service person.**

- Never use solid fuels such as wood, paper, cardboard, coal, or any other flammable liquids etc., in this appliance.

- Do not use this heater if any part has been under water. Immediately call a qualified service technician to inspect the heater and to replace any part of the control system and any gas control which has been under water.

- Do not abuse glass by striking or slamming door shut.

TABLE OF CONTENTS

SECTION		PAGE
1.	Code Approvals	3
2.	Dimensions and Clearances to Combustibles	5
3.	Venting	6
4.	Assembly and Installation Instructions	7
5.	Electrical Requirements	8
6.	Gas Line Connection and Testing	9
7.	Installation of Log Sets and Embers and Brick Panels	10
8.	Operating Instructions	11
9.	Routine Maintenance and Service	12
10.	Fuel conversion	13
11.	Trouble Shooting	14
12.	Parts and Accessories	15
13.	Warranty	16
14.	Installation Data Sheet	17

1. CODES AND APPROVALS

VENTED type is identified by the suffix BV. This appliance draws in room air for combustion and vent dilution air.

- These appliances have been tested by Intertek Testing Services. and found to comply with the established standards for GAS FIRED VENTED ROOM HEATER in CANADA and the USA as follows:-

LISTED VENTED ROOM HEATER (EG 32 BV Nat. & LPG)
TESTED TO: ANSI Z21.11.1b-1995, CAN 1-2.1M 86. VENTED ROOM HEATER
ANSI Z21.50-1996/ CGA-2-22.-M96, CGA-2.17-M91

CANADA and U.S.A.

CERTIFIED FOR INSTALLATION FROM 0 - 2000 ft (810 m)

FOR INSTALLATIONS ABOVE 2000 FEET (810 m)

- In Canada the unit must be derated by 10% for installation at elevations between 2,000 (810 m)and 4,500 feet (1370 m).

NATURAL GAS	PROPANE
INPUT : 25416, (7.44KW) FRONT #48	INPUT : 25217, (7.39KW) FRONT #56
REAR #50	REAR #57

- In the USA, these appliance are certified for elevations up to 2,000 feet (810 m). For elevations above 2,000 feet (810 m), input should be reduced 4% for each 1,000 feet (405 m) above sea level.

ENVIROGAS EG 32

- has been certified for use with either natural or propane gases. (see rating label.)
- is not for use with solid fuels.
- is approved for bedroom or bedsitting room. (A thermostat must be installed in Canada.)
- must be installed in accordance with local codes.
  If none exist use current installation code CAN/CGA B149 in Canada or ANSI Z223.1/NFPA 54 in the USA.
- must be properly connected to a venting system

WARNING: For installation only in a solid fuel burning fireplace with a working flue and constructed of non combustible material using a chimney liner kit

.CODES AND APPROVALS CONTINUED

RE : CONVERSION OF ZERO CLEARANCE FACTORY BUILT FIREPLACES

The following instructions cover Sherwood Industries Ltd. policy for Gas-Fired Appliances (inserts) to be retofitted into existing factory built fireplaces with replacement parts removed.

GENERAL REQUIREMENTS

Background

A gas fired insert is approved for use in an existing masonry or listed factory built fireplaces without any alterations. If the factory or masonry fireplace is altered its warranty is void.

Recent pratice in the field is to remove parts that do not require cutting, bending or breaking from the factory built in order to allow the insert to fit.

Sherwood Industries Ltd. Policy:

Intretek has approved listed factory built fireplaces, as a certified zero clearance kit provided that the following conditions have been met.

1. The removal of any part will not weaken the stuctural integrity of the factory built fireplace.
2. The factory built fireplace is in good condition.
3. There is no alterations in the form of cutting, bending, or breaking any parts.
4. Firebricks may be removed.
5. A permanent label must be supplied with the insertwith the instructions to affix it to the firebox of the factory built fireplace. It will have the wording to the effect :

‘’WARNING- THIS FIRPLACE MUST ONLY BE OPERATED WITH A GAS INSERT- REMOVAL OF THE INSERT AND THE USE OF SOLID FUEL IS PROHIBITED AND MAY CAUSE A FIRE HAZARD

REPLACEMENT PARTS INCLUDE:

Fire bricks, smoke sheild, flue damper, glass doors, and firescreens.

2. DIMENSIONS AND CLEARANCES TO COMBUSTIBLES

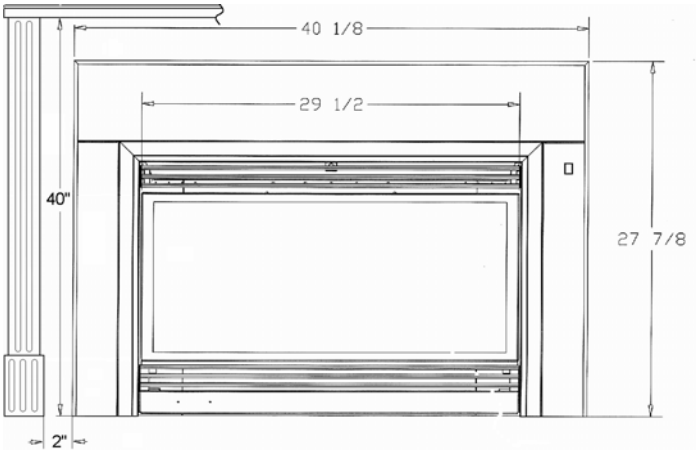

DISTANCE TO COMBUSTIBLES:
Mantel pillar to side of surround panel 2 / 5.08 cm
Bottom of unit to a 8 wide mantel 40" / 101 cm
Minimum non-combustible surface in front of unit
8" / 20.8 cm

OTHER DIMENSIONS
A. Minimum depth into fireplace 16" / 41 cm
B. Depth of unit out of fireplace 2-5/8" / 6.7 cm

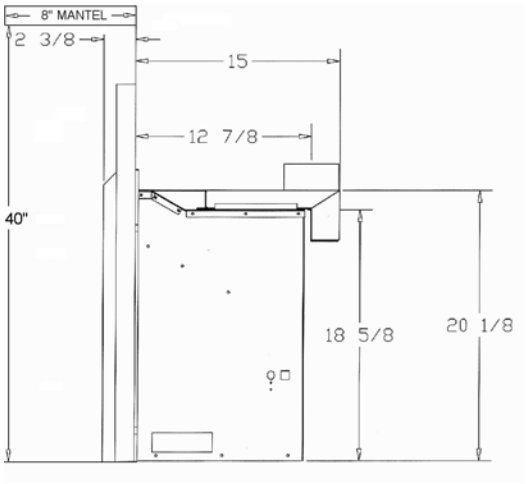

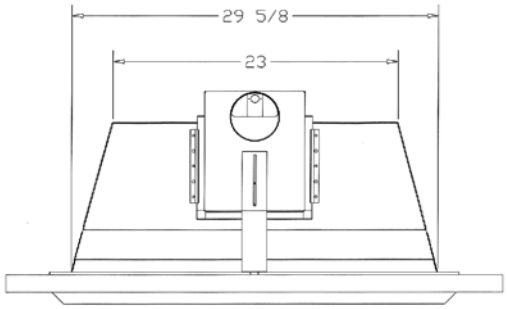

C. Minimum firebox size
W 33" x H 22" x D 17"
(W 84 x H 55.8 x D 43.1 cm)

Maintain sufficient clearances for operation, service and maintenance

3. VENTING

WARNING: THIS APPLIANCE HAS BEEN DESIGNED TO OPERATE BY DRAWING COMBUSTION AIR AND DILUTION AIR FROM THE ROOM. IT IS ALSO DESIGNED TO DRAW ROOM AIR FOR PROPER HEAT CIRCULATION FROM THE SIDES OF THE UNIT. BLOCKING OR MODIFYING THE LOUVERS IN ANY WAY CAN CREATE HAZARDOUS SITUATIONS, EITHER THROUGH POOR VENTING OR BY OVERHEATING. IT IS IMPORTANT THAT THIS UNIT HAS SUFFICIENT AIR CIRCULATION FOR PROPER VENTING AND COMBUSTION. PROVISIONS MUST BE MADE FOR THE SUPPLY OF ADEQUATE COMBUSTION AND VENTILATION AIR. THESE OPENINGS MUST NOT BE BLOCKED. THE APPLIANCE MUST NOT BE CONNECTED TO A CHIMNEY FLUE SERVICING A SEPARATE SOLID FUEL BURNING APPLIANCE.

AUTOMATIC FLUE GAS SPILL SWITCH

NOTE: THIS HEATER MUST BE PROPERLY CONNECTED TO A VENTING SYSTEM. THIS HEATER IS EQUIPPED WITH A VENT SAFETY SHUTOFF SYSTEM DESIGNED TO PROTECT AGAINST IMPROPER VENTING OF COMBUSTION PRODUCTS. THIS SAFETY SWITCH IS LOCATED ON THE REAR OF THE APPLIANCE CLOSE TO THE DRAFT HOOD RELIEF OPENING.IF THE SWITCH TRIPS MORE THAN ONCE THE VENTING SHOULD BE INSPECTED BY A QUALIFIED SERVICE TECHNICIAN FOR POSSIBLE BLOCKAGE OR SEVERE DOWN DRAFT CONDITIONS

The draft hood must be in the same pressure zone as the air inlet. To inspect draft from the front of the unit, locate the 3/8" tube between the top louvers and check for a draft using smoke. A vacuum or suction into the tube will indicate proper drafting.

This model can be vented with 4" aluminum or stainless steel flex vent and/or certified Type B Gas Vent. The flue collar of the appliance will fit inside of a standard 4" vent and may be fastened directly to the vent.

3.VENTING FIREPLACE INSERTS

WARNING: Operation of this heater when not connected to a properly installed and maintained venting system can result in carbon monoxide (CO) poisoning and possible death.

The Envirogas EG 32 may be installed and vented into any solid fuel fireplace that has been installed in accordance with the National, Provincial/State and local building codes and has been constructed of non-combustible materials.

An approved full length chimney liner and rain cap must be used. A throat connector or flashing **must** be installed, to ensure a tight seal, top performance, safety and efficiency. Carefully follow the manufacturers instructions which accompany the chimney liner kit.

Install sealed throat connector or flashing to prevent leakage of room air up through chimney.

Measure the height of the chimney beforehand and purchase the appropriate kit. Never attempt to over stretch a flexible liner to accommodate the height of the chimney.

Make sure that all chimney clean outs are tightly fitting and will not permit air to leak into the chimney.

The chimney must be clean, in good working order and constructed out of non-combustible materials.
Any flue damper must be removed or blocked permanently in the open position.

Remove the vent collar plate from the top of the insert and connect it securely with sheet metal screws and/or hose clamps. Check for any tears in the liner at this point.

IMPORTANT: The screws that hold the vent collar plate in it's approved position must be installed.

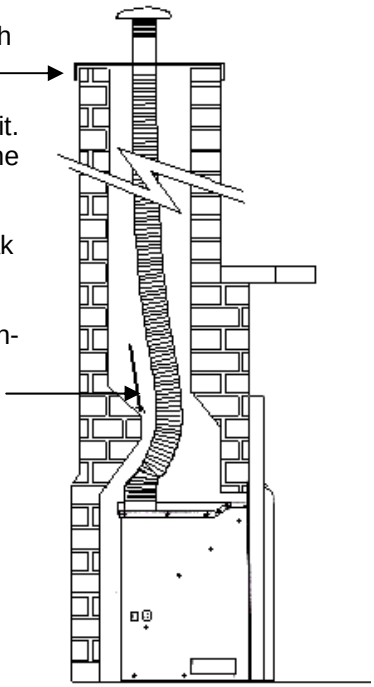

PREPARATION FOR INSTALLATION

- Remove the packaging from the appliance and surround panels, check to make sure there is no damage. Carefully check the glass door. **Do not use the unit if it is damaged.** In the event damage is found please report it to both the courier and your dealer as soon as possible.
- Carefully clean the fireplace and flue before installing the stove. Failure to do so may result in fumes or dirt being blown into the room and may cause a fire leading to death or serious injury.

4. ASSEMBLY AND INSTALLATION INSTRUCTIONS

ASSEMBLING AND INSTALLING YOUR ENVIROGAS EG 32

1. Remove the unit from it's box

2. Open the door, by first removing the cover with the nameplate attached (open valve door and pull nameplate cover side tab to release catch), undo the two bolts at the bottom of the door. Lift the door up and out to remove.
CAUTION GLASS MAY SEPARATE FROM DOOR.

3. Remove log and ember set and all wrapping material from the stove. Remove wrapping material from log and embers and check for any damage. If damage is observed do not use unit and contact your local dealer.

4. Measure the distance from the front of the fireplace facing to the front of the flex liner in the chimney.

5. Loosen the two "adjustment" screws and adjust the sliding exhaust channel to the dimensions measured in STEP 1. Re-tighten screws.

6. Remove the front exhaust locating screw. Slide the exhaust channel backwards from the unit. Properly secure the exhaust channel to the 4" flexible vent pipe liner previously installed in the chimney using (3) three sheet metal screws.. Be careful not to over stretch the liner.

7. Place the unit part way into the fireplace. Connect the fireplace insert's rigid gas line to the household gas supply using locally approved methods. Place the electric cable so it can be connected to the power supply. Adjust the leveling legs

8. Slide the insert into the fireplace ensuring that the exhaust channel is located under the slide rails on the top of the fireplace insert.

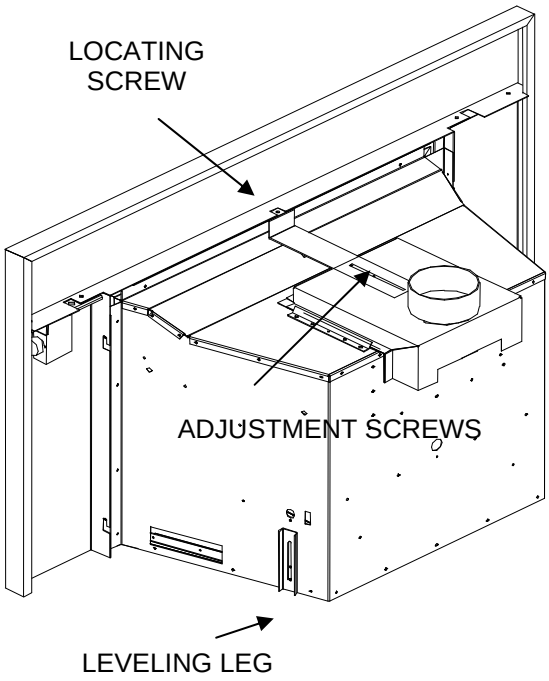

9. Re-install the locating screw and tighten.

10. To assemble the surround panels, lay the panels face down on a soft flat surface and align the outer edges of the sides with the top. Bolt the sides to the top using the hardware provided. (4 x ¼ nuts and bolts)

11. Connect the surround panel wire harness terminal to the stove wire harness terminal on the right side panel.

12. Place the assembled surround panel around the stove, align the slots with the screw heads. Push back then down to engage the surround slots on the mounting screws. Make sure the top surround panel sits flat on the stove.

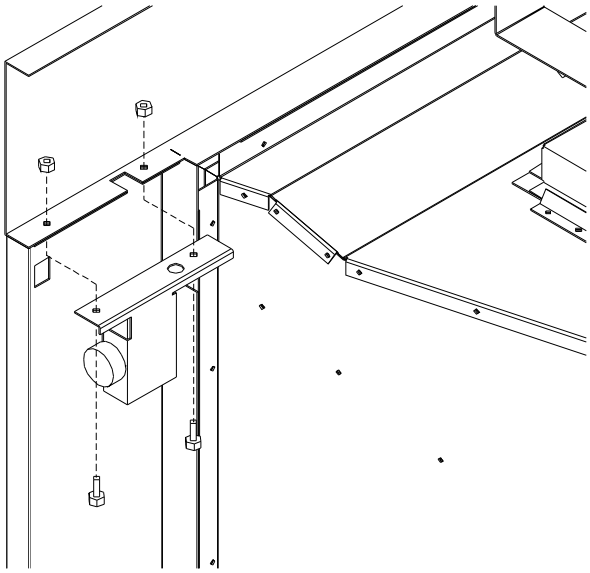

5. ELECTRICAL REQUIREMENTS

The EG 32 will operate without electrical power. This model has a Millivolt gas control which uses the pilot flame to generate enough electricity to operate the main burners. The appliance when equiped with blower must be electrically connected and grounded in accordance with local codes or in the absence of local codes, with the current CSA C22.1 CANADIAN ELECTRICAL CODE Part 1, SAFETY STANDARDS FOR ELECTRICAL INSTALLATIONS, OR THE NATIONAL ELECTRICAL CODE ANSI / NFPA 70 in the U.S.

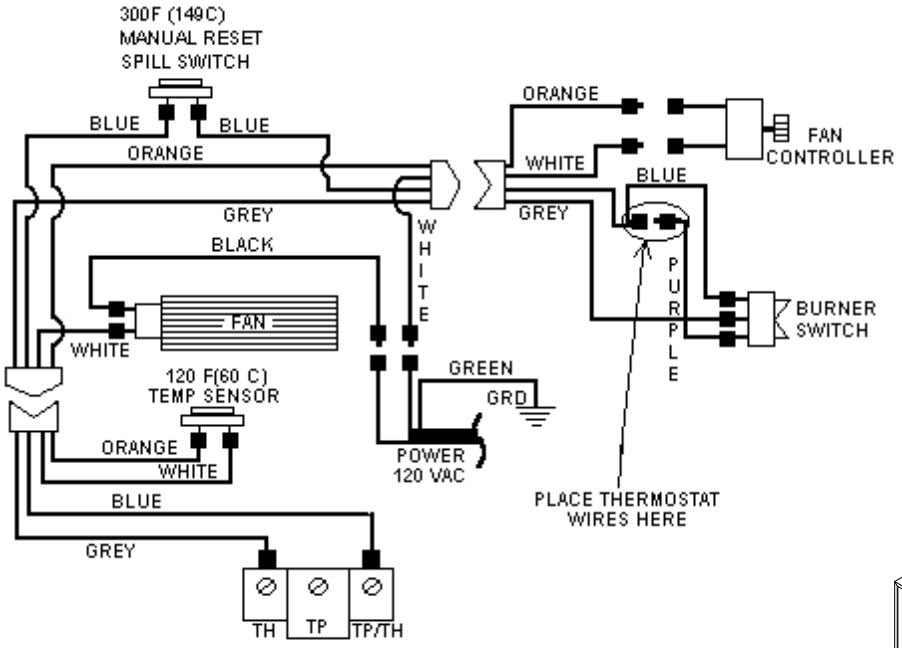

WARNING: Electrical grounding instructions. This appliance is equipped with a three-prong (grounding) plug for your protection against shock hazard, and should be plugged directly into a properly grounded three-prong outlet. DO NOT cut or remove the grounding prong from this plug.

CAUTION: Label all wires prior to disconnection when servicing controls. Wiring errors can cause improper and dangerous operation. Verify proper operation after servicing

REMOVING / INSTALLING THE BLOWER

1. Turn the unit off,open the door and remove the log set. Remove brick panel(s) (see Removing and Installing Brick Panels). Remove the burner tray assembly by removing the two(2) screws on either side of the tray. Pull tray up at the back and lift out.

2. Disconnect the gas line to the nipple. Remove the three(3) screws holding the burner control tray to the back firewall. Lift tray up on left side and pull out.

3. Pull blower towards you. Disconnect wires from the blower and remove.

4. To re-install perform the precceding steps in reverse.

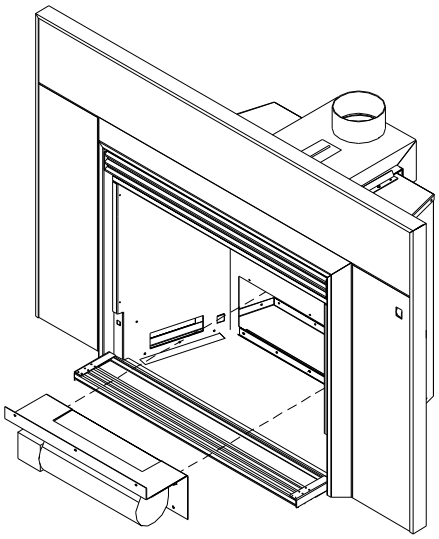

INSTALLING REMOTE THERMOSTAT OR WALL SWITCH

RECOMMENDED WIRE SIZE for thermostat installation: 18 gauge, 2 wire solid core, Low Voltage wire. (Bell wire)

1. Install the 18 Gauge wire supplied to the two terminals on the thermostat or remote wall switch.
2. Connect the other end of the wire to the gas valve using the two outside terminals on the front of the gas valve. Use the terminals marked (TP/TH and TH).

RECOMMENDED MAXIMUM LEAD LENGTH (TWO WIRE)
WHEN USING WALL THERMOSTAT

WIRE SIZE	MAXIMUM LENGTH
14 GAUGE	100 FEET
16 GAUGE	64 FEET
18 GAUGE	40 FEET
20 GAUGE	18 FEET

6. GAS LINE CONNECTION and TESTING

WARNING: Only persons licensed to work with gas piping may make the necessary gas connections to this appliance.

GAS LINE CONNECTION

- This stove is equipped with a 3/8 x6 inch black iron nipple located on the right side of the unit terminating in a 3/8" male NPT end. Consult your local authorities codes or the CAN/CGA B 149 (1 or 2) installation code in Canada, or in the USA gas installations follow either local codes or the current edition of the National Fuel Gas Code ANSI Z223.1.
- The efficiency rating of this appliance is a product thermal efficiency rating determined under continuous operating conditions and was determined independently of any installed system.

The appliance and its shutoff valves must be disconnected from the gas supply piping system during any pressure testing where the pressure exceeds 1/2 PSIG (3.45 kpa) or damage will occur to the valve.

The appliance must be isolated from the gas supply piping system by closing its individual manual shutoff valve during any pressure testing of the gas supply piping system at test pressures equal to or less than 1/2 psig (3.5 kPa).

Always check for gas leaks with a soap and water solution after completing the required pressure test.

TO TEST VALVE PRESSURES

The pressure taps are located on the left side of the valve

- Turn set screw 1 turn counter clockwise to loosen,.
- Place 5/16" (8 mm) I.D. hose over pressure tap system.
- Check pressures using a manometer.
- When finished, release pressure, remove hose & tighten set screw.

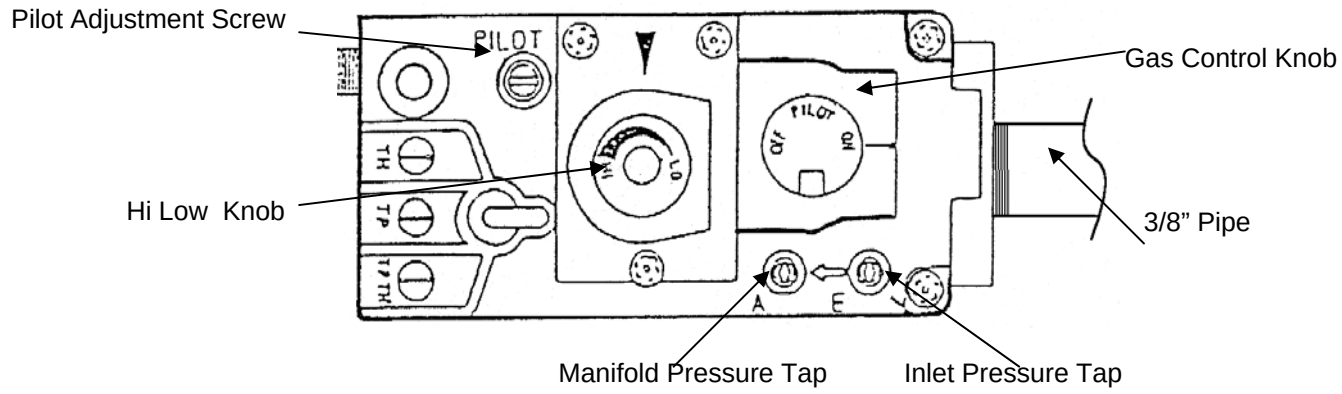

ORIFICE SIZES, PRESSURES AND BTU'S

All models are equipped with a variable output gas control.

	NATURAL	PROPANE
FRONT BURNER:	#48DMS	#56 DMS
REAR BURNER:	#50DMS	#57 DMS
Manifold Press:	3.8"wc / 0.95 kpa	11.0"wc / 2.74 kpa
Min. Manifold Press:	1.1"wc / 0.27 kpa	2.7"wc / 0.67 kpa
Max. Supply Press:	7.0"wc / 1.74 kpa	12.0"wc/ 2.98 kpa
Min. Supply Press:	5.0"wc / 1.25 kpa	11.5"wc / 2.86 kpa
Max. BTUH Input:	30,000 btu/h/ 8.8 Kw	30,000 btu/h/ 8.8 Kw
Min. BTUH Input:	15,000 btu/h/ 4.39 Kw	15,000 btu/h/ 4.39 Kw
Output	Fan on, 23,550 btu/ h/6.9kw Fan off, 22,500 btu/h/.6.6kw	Fan on, 24,150 btu/h/ 7.1kw Fan off, 23,100 btu/h/ 6.77kw

NEVER USE AN OPEN FLAME FOR LEAK TESTING

7. INSTALLATION OF LOG SET, EMBERS and BRICK PANELS

INSTALLING THE GLOWING EMBERS and LOGSET
A bag of ceramic fiber embers is provided for use on the front and rear burner ember trays.

CAUTION: Use only the type of ember material supplied with this appliance. Due to the irregular size of the ember material there may be more than required. Use only a single layer. Do not pile embers. The use of other foreign materials on the burners may create dangerous conditions.

If over time, through cleaning and servicing, these embers require replacement, contact your nearest ENVIROGAS dealer for replacement embers.

1. Carefully remove log from unit. Check to ensure there is no damage. It is very important to install this log in its proper position to insure safe, optimum operating conditions.



2. Place the log set into the fire box with the burnt area forward. Locate the log by seating it down onto the burner tray supports

3. Gently remove the ember material from the plastic bag. Spread a single layer loosely across the rear ember tray. Do not allow any embers to rest against pilot assembly.

4. Spread ember pieces in a single layer evenly across the front burner ember tray, Place a single layer of embers on top of the front burner.

5. Carefully avoid any clumping or large build ups. Do not pack down, leave embers loose

6. Upon the first light up, watch for ignition to **all** burner ports. If a long delay is noted:
   First, wait for the appliance to cool down
   - Open the front door of the appliance.
   - Check to carefully reposition the embers making sure that burner ports are not plugged solid or blocked

REMOVING AND INSTALLING THE BRICK PANELS

Open the door. Remove the log set.

Steel panel: Pull liner forwards to disengage hold down screws. Tilt forward at top corners and pull out. Installation is the reverse.

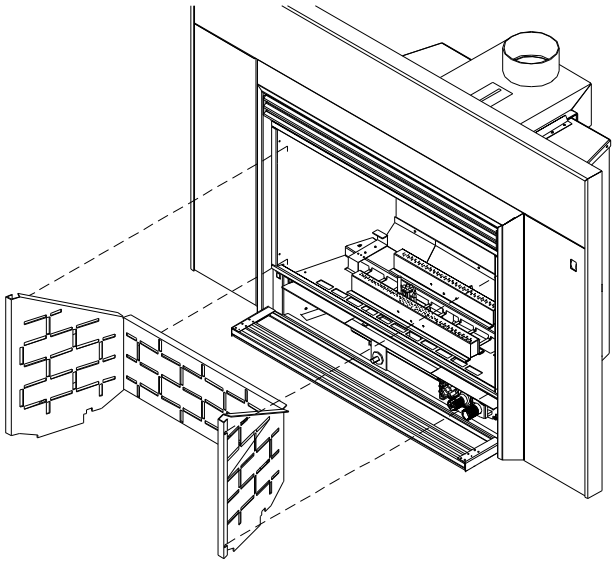

Optional ceramic panels: Remove burners. Gently pull right brick side panel inwards from the bottom back. Pull towards the back then out freeing it from the front retainer. Caution pilot may damage panel. Remove left side panel the same way. remove back panel from ledge.

To install, place back panel on ledge. Insert front edge of brick panel into the retainer and very gently move panel forward and out until flush against firebox side. Repeat for other side.

CAUTION: NEVER OPERATE THIS APPLIANCE WITH THE DOOR REMOVED

8.OPERATING INSTRUCTIONS

FOR YOUR SAFETY READ BEFORE OPERATING

WARNING: IF YOU DO NOT FOLLOW THESE INSTRUCTIONS EXACTLY, A FIRE OR EXPLOSION MAY RESULT CAUSING PROPERTY DAMAGE, PERSONAL INJURY OR LOSS OF LIFE.

A) This appliance is equipped with a pilot, which must be lit by hand by following these instructions exactly.

B) BEFORE LIGHTING smell all around the appliance area for gas, and next to the floor because some gas is heavier than air and will settle on the floor.

WHAT TO DO IF YOU SMELL GAS:

- Do not try to light any appliance.
- Do not touch any electrical switch; do not use any phone in your building.
- Immediately call your gas supplier from a neighbor's phone. follow the gas supplier's instructions.
- If you cannot reach your gas supplier, call the fire department.

C) Use only your hand to push in or turn the gas control knob. Never use tools. If the knob will not push in or turn by hand, do not try to repair it . Call a qualified service technician. Force or attempted repair may result in a fire or explosion.

D) Do not use this appliance if any part has been under water. Immediately call a qualified service technician to inspect the appliance and to replace any part of the control system and any gas control which has been under water

LIGHTING INSTRUCTIONS

1. STOP! Read the safety information above.
2. Turn off all electrical power to the appliance.
3. Turn the gas control knob  clockwise to the "off' position.
4. Open door. **Wait five (5) minutes to clear out any gas**. Close door. If you smell gas including near the floor, **STOP!** Follow "B" in the above safety information.
   If you don't smell gas go to next step.
5. Find the pilot located to the right between the front and rear burner.
6. Turn gas control knob  counter-clockwise to "PILOT".
7. Push the gas control knob in fully and hold. Immediately light the pilot by pushing the piezo spark igniter. Keep knob depressed for about 30 seconds after pilot is lit. Release knob. If pilot goes out, repeat steps 4 through 6.

WARNING The gas valve has a lockout device, which will not allow the pilot burner to be re-lit until the thermocouple, has cooled.

If the knob does not pop up when released, stop and immediately call your service technician or gas supplier.

NOTE: Check to be sure the pilot flame engulfs the thermocouple and that the burners light completely.

If the pilot will not stay lit after several tries, turn the gas control knob to "OFF" and call you service technician or gas supplier.

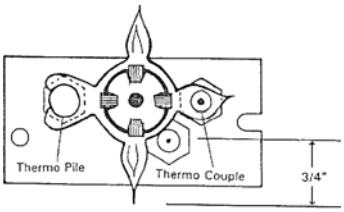

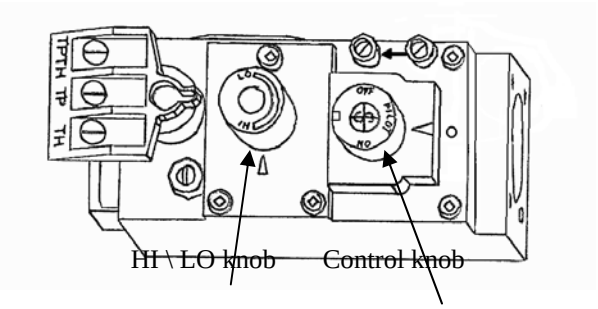

8. Turn gas control knob counter-clockwise to the "ON" position.
   Flip burner switch to "ON" then turn "HI / LO" knob to the desired setting.

9. Turn on all electrical power to the unit

TO TURN OFF GAS TO APPLIANCE

1. Turn the gas control knob  clockwise to "OFF" DO NOT FORCE
2. Turn off all electrical power to the appliance if service is to be performed.
3. Flip burner switch to off.

9.ROUTINE MAINTENANCE and TECHNICAL

Periodically check to ensure that your system is clean.

Periodically check the pilot and burner. Check to see that all the burner ports are clean and clear. Check the pilot head for blockage. Check to ensure the pilot flame is blue with yellow tips.

OPENING THE DOOR

Turn unit off and wait until the appliance has cooled down.

Open the lower louver panel. Undo the two bolts at the bottom corners of the door. Swing door out, then lift up and out to remove.

Ensure the door is properly fastened after cleaning before attempting to re-light the appliance.

CLEANING THE GLASS

Do not clean glass when hot

It will be necessary to clean the ceramic glass periodically. During a cold start up, condensation will sometimes form on the glass, this is a normal condition with all gas fireplaces and stoves. However, this condensation can allow dust and lint to cling to the glass surface. Initial paint curing of the appliance can leave behind a slight film on the glass. This is a temporary problem. It is therefore recommended that the glass be cleaned initially after about the first two weeks of use.

To clean the door use a **mild glass cleaner and a soft cloth. Abrasive cleaners will damage the glass and gold surfaces.**

TO REPLACE DOOR GLASS

The glass in this appliance is ceramic. If the glass is damaged or broken a factory replacement must be fitted.
To Replace:

- Open door, remove the glass carefully.
- Install the new piece of glass with the large bulb in the gasket tape against the unit. Place the joint in the tape in a bottom corner. Close door

Glass must be purchased from an Envirogas dealer. No substitute materials are allowed.

CLEANING THE INSIDE OF THE FIREBOX

Remove the log carefully from the firebox. Gently remove the embers and place on a piece of paper towel. Until ready to replace.

Vacuum the bottom of the firebox thoroughly. Carefully clean off any dust on the logs and brick panels and remove any lint from the main burner and pilot burner.

After carefully replacing the log and embers in their correct positions, and the door has been resealed, re-light the pilot, following the instructions on the attached label.

CLEARANCES MUST BE SUFFICIENT TO ALLOW ACCESS FOR MAINTENANCE AND SERVICE

Depending upon the amount of use, cleaning should be required no more than two or three times per season.

REMOVING BURNER CONTROLS:

1. Shut of gas supply to appliance.

2. Remove surround panels by pulling up then out. disconnect gas line from the valve. Disconnect harness at connector on side of unit.

3. Open the door and remove the log. Remove the burner tray assembly by removing the two screws on either side of the tray. Pull tray up at the back, lift tray out and towards the front.

4. Remove the brick panel as per instructions. Undo the three screws that hold the burner control tray onto the back firewall. Lift control tray up on the left side and pull out. Remove wire connector from firebox.

5. Installation is the reverse

Caution:

Bleed lines before lighting and light pilot with door open

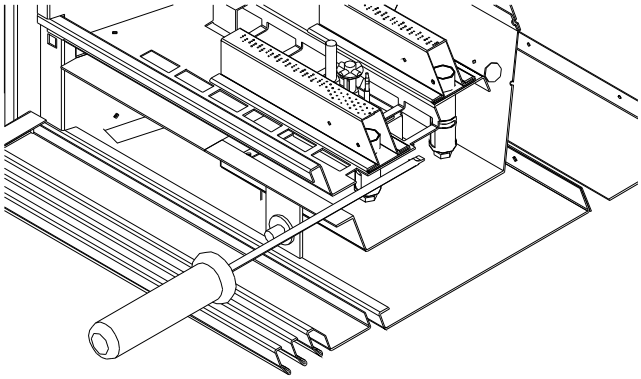

ADJUSTING VENTURI AIR SETTINGS

- There is a separate venturi air shutter for each burner The venturi's have been set for installation at sea level

- To adjust for high altitude: open the lower louvers, Locate the venturis between the burner and control trays. Loosen the 2 set screws with a long screwdriver and rotate the air shutters to the correct setting.

10.FUEL CONVERSION

"Warning" This conversion kit shall be installed by a qualified service technician in accordance with the manufacturer's instructions and all applicable codes and requirements of the authority having jurisdiction. If the information in these instructions is not followed exactly, a fire, explosion or CO poisoning may result. The qualified service agency is responsible for the proper installation of this kit. The installation is not proper or complete until the operation of the converted appliance is checked as specified in the owner's conversion kit.

Please read and follow these instructions. Also please read the instruction guide lines provided by S.I.T on how to remove and install the HI-LOW regulator.

STEP 1. Carefully inspect all parts supplied with this conversion kit.
STEP 2. Shut the gas off and disconnect the main gas line from the unit.
STEP 3. Open the door by undoing the two screws on the bottom of the door, pull door towards you then lift up and out. Remove the logs and the burner tray from the unit, this will expose the main burner orifices and the pilot assembly
STEP 4. Change the regulator on the front of the gas valve. (Follow the instructions provided by S.I.T)
STEP 5. To change the pilot orifice: First, remove the two (2) T-20 Torx screws that hold the pilot assembly to the burner tray. Lift the pilot assembly from the burner tray. Using a 10mm wrench, disconnect the pilot line from the pilot assembly and remove the pilot injector. Install the new pilot injector.
(BE CAREFUL WHEN TIGHTENING THE PILOT FITTING, YOU COULD BREAK THE CERAMIC IGNITER ELECTRODE).
STEP 6. Re-install the pilot assembly in the reverse order of STEP 5.
STEP 7. Remove the two (2) main burner orifices using a ½" deep socket
STEP 8. Install the two (2) new orifices supplied making sure that the orifices are in the correct location. Be sure to put a bead of pipe thread sealant or approved Teflon tape on the orifices before installing them into the burner assembly.
STEP 9. Reinstall the burner tray, log set and door.
STEP 10. Re connect the gas line to the unit. Do a leak check using a soap and water solution or an approved manner on the gas supply line and the pilot tubing.
STEP 11. Re-light the appliance to insure proper operation and proper flame appearance. Be sure to adjust the venturi setting to achieve an efficient flame in the fireplace.
STEP 12. MAKE SURE that the sticker provided by S.I.T is installed to signify that this valve has been converted to a different type of fuel. Also make sure that the rating plate has a conversion label to show that this unit has been converted to a different fuel type.

A VISUAL CHECK OF THE REGULATOR KNOB IS NECESSARY TO DETERMINE WHETHER OR NOT THE REGULATOR IS THE CORRECT PART. A 50% TURN DOWN REGULATOR WILL HAVE ONLY ONE CORNER ON THE KNOB.

CONVERSION KIT PARTS LIST

1 50% turn down HI-LOW Regulator w 3 T-20 Torx screws
1 T-20 tamper proof Torx screwdriver bit
1 pilot injector
2 Main orifices
1 Pilot assembly mounting gasket

	NATURAL GAS	PROPANE
Pilot Orifice.	.51mm	.35mm
Burner Orifice.	Front #48	Front #56
	Rear #50	Rear #57
Venturi Settings	Front closed	Front 1/8"
	Rear closed	Rear 1/8"

11. TROUBLE SHOOTING

Problem	Possible Cause	Solution
Spark will not arc to the pilot after repeated pressing of spark ignitor	Defective piezo ignitor	Check connections to ignitor -If ignitor connections are good but there is no spark-replace ignitor
	Broken spark electrode	-Check for broken ceramic insulation replace, electrode if broken
	Mis-aligned spark electrode	-If spark is not arcing from the electrode to pilot-adjust by loosening screws on pilot base. Adjust away from burner and re-tighten
Pilot will not remain lit	Problem with thermocouple circuit	-Check for proper connection of thermocouple to rear of valve. If loose, tighten lightly -Check pilot for full flame impingement around thermocouple. If the pilot is to small - Check gas pressure, adjust pilot rate screw, check pilot head for blockage. -Check thermocouple voltage at rear of valve-must be greater than 5 mV. If low , replace thermocouple.
	Air in gas line - (Pilot flame dies while knob is depressed.)	-Bleed line. -Check gas line pressure. -Contact dealer.
Burners will not remain lit	Problem with thermopile circuit	-Check gasline pressure. -Check for flame impingement on thermopile, if low see “Pilot will not stay lit” -check thermopile for a Minimum of 300 mV when burner switched on. -Check wiring to thermostat for breaks. **BV only:** - Check for spillage at draft hood that may trip spill switch.
Flame lifting	- Leak in vent pipe - Improper vent configuration - Terminal may be recirculating flue gases	-check for leaks in vent connections -check vent configuration with manual -check to see if terminal is on correctly -May need to install high wind termination cap -contact dealer.
BV only: insuficiant air for combustion	- Air tight house - A Vacuum in room due to other air moving device	- supply make up air to the unit.
Glass fogs up	Normal conditions - after the appliance warms up glass will clear ** Due to additives in gas, glass may get hazy during normal use** Clean when needed.	
Blue flames	Normal during start - flame will yellow as the appliance heats up.	
Flames are burning “dirty” or Sooting	Flame impingement	-check log position -increase primary air by opening venturi shutters see also “Burners will not stay lit”

12. PARTS AND ACCESSORIES

Service Parts available from your local Envirogas Dealer.

PART #	DESCRIPTION
EG32-001	Convection Blower
EG32-002	Heyco Strain Relief
EG32-003	Fan Controller with Knob
EG32-004	Hi-Temperature Electrical Cord
EG32-008	Burner Switch
EG32-014	120°F Ceramic Auto Reset n/o Temp Sensor (big foot)
EG32-015	300°F Temp Sensor n/c Ceramic (spill switch)
EG32-018	Wire Harness
EG32-026	Valve Access Door Magnet
EG32-030	Blank Orifice
EG32-031	Thermocouple
EG32-032	Ignitor electrode
EG32-035	S.I.T Piezo Ignitor
EG32-036	Ignitor Cable
EG32-040	Thermopile
EG32-041	SIT Nova 820 Valve (NG) 50% turn down
EG32-042	SIT Nova 820 Valve (LPG) 50% turn down
EG32-043	NOVA Pilot with Ignitor Electrode, Natural Gas
EG32-044	NOVA Pilot with Ignitor Electrode, Liquid Propane
EG32-052	Burner Controls Complete (NG)
EG32-053	Burner Controls Complete (LPG)
EG32-062	6” x 3/8” Black Iron Pipe Nipple
EG32-065	Burner Tray
EG32-070	ENVIROGAS EG32 Nameplate
EG32-072	Log Set & Embers
EG32-073	Embers
EG32-074	Brick Panels. (Ceramic)
EG32-075	Brick Panel (Metal)
EG32-088	Valve Gaskets
EG32-089	Window channel tape
EG32-090	Glass with Gasket
EG32-092	Painted Door
EG32-110	Regular Size Surround Panel
EG32-114	Brass Surround Trim
EG32-115	Louver set GOLD (Top & Bottom)
EG32-200	LP to NG Conversion Kit
EG32-202	NG to LP conversion Kit

13. WARRANTY

Sherwood Industries Ltd. offers a *Lifetime Warranty on this gas product. The lifetime warranty covers the appliance for a period of seven years from the date of installation. This warranty applies only to the original owner in the original location

Covered under the lifetime warranty are Cabinet Sides, Tops, Pedestals, Surround Panels and Chassis and Heat Exchanger. These steel components are covered against manufacturer's defects for 5 years and labor for the first year and for parts only thereafter.(A) The following exclusions apply:- over-firing due to incorrect setup or tampering, damage caused by incorrect installation, usage or abuse. The unit must be properly installed by a qualified technician or installer, and must meet all local and national gas and building code requirements.

We also cover against manufacture defects under our lifetime warranty. The following components, Gold Plating, Log Set, Burners and Glass (A) The following exclusions apply: Gold plating- Damage caused by scratching, marring, chemicals, fingerprints, abrasive cleaners or discoloration with age. Glass- use of harsh or abrasive cleaners, striking the glass or surface contaminates. Logset- Damage caused by incorrect handling or misuse. Burners- damage caused by improper or continuous operation under incorrect conditions.

Sherwood Industries Ltd. offers a 2-year warranty on all the Electrical Components and Gas Components against manufacturing defects. Paint is covered against flaking. This offer includes parts and labor for 1 year and for parts only thereafter.

The paint on the Metal Brick Liner may peel. This is due to the extreme conditions applied to the paint and is no way covered under warranty.

Your dealer shall make all claims under this warranty in writing.

(A): TO A MAXIMUM OF SEVEN YEARS

WHEN FILING A WARRANTY CLAIM PLEASE COMPLETE THE FOLLOWING INFORMATION ON AN OFFICIAL WARRANTY CLAIM FORM:

To the Dealer

- Name, address and telephone number of purchaser and date of purchase.
- Date of installation. Name of installer and dealer. Serial number of the appliance. Nature of complaint, defects or malfunction, description and part # of any parts replaced.

To the Distributor

- Sign and verify that work and information are correct.

This warranty covers defects in materials and workmanship only if the product has been installed according to the manual's instructions. If the product is damaged or broken as a result of misuse or mishandling the warranty does not apply. The warranty does not cover removal and re-installation costs.

Sherwood Industries Ltd. reserves the right to repair or to replace the defective product. The shipping costs are to be paid by the consumer. All warranties by the manufacture are set forth herein and no claim shall be made against the manufacturer on any oral warranty or representation.

Sherwood Industries Ltd. and its employees or representatives will not assume any damages, either directly or indirectly caused by improper usage, operation, installation, servicing or maintenance of this appliance.

Sherwood Industries Ltd. reserves the right to make changes without notice. Please complete and mail the warranty registration card and have the installer fill in the installation data sheet in the back of the manual for warranty and future reference.

14. INSTALLATION DATA SHEET

The following information must be recorded by the installer for warranty purposes and future reference.

Envirogas Models:
EG 32 BV

Name of Owner:

_____

Address:

_____

_____

_____

Phone:_____

Name of Dealer:

_____

Address:

_____

_____

_____

Phone: _____

- Model :_____
- Serial Number: _____
- Date of Purchase:

_____/_____/_____

- Date of Installation:

_____/_____/_____

- ____ Natural Gas (Nat.), ____ Propane (LPG)
- Inlet Gas Supply Pressure: _____ in.w.c.

If the orifices were changed by the installer.

- Front Burner Orifice # _____ ,

  Back Burner Orifice # _____ .

- Pilot Orifice # _____ or _____ in.Dia.

Installer's Signature

Name of Installer:

_____

Address:

_____

_____

_____

Phone :_____

E-MAIL ADDRESS (envirofire@home.com)
WEB SITE ADDRESS (www. Enviro-fire.com)

MANUFACTURED BY:
SHERWOOD INDUSTRIES, 6782 OLDFIELD ROAD, SAANICHTON, B.C., CANADA V8M 2A3