SHERWOOD INDUSTRIES IS AN ENVIRONMENTALLY RESPONSIBLE COMPANY
THIS MANUAL IS PRINTED ON 100% RECYCLED PAPER

ENVIRO GAS

By SHERWOOD INDUSTRIES

95 Freestanding Direct Vent

OWNERS MANUAL

Installation And Operating Instructions For Models:-

ENVIROGAS 95 Freestanding Direct Vent Natural Gas (EG.95.FS.DV.Nat.)

ENVIROGAS 95 Freestanding Direct Vent Propane (EG.95.FS.DV.LPG.)

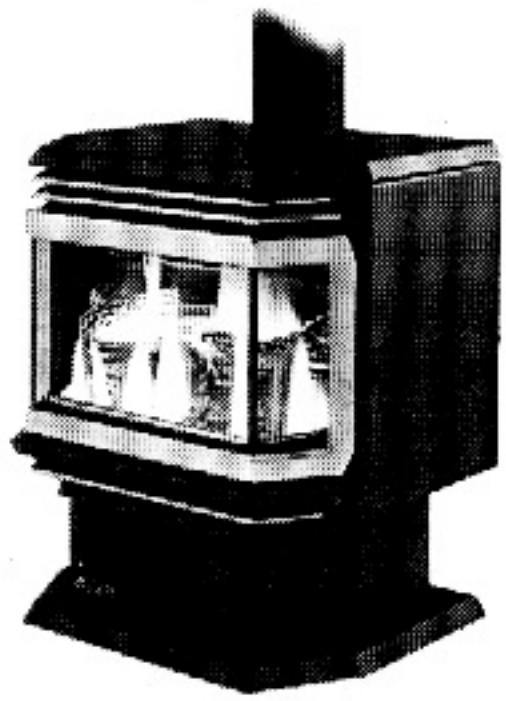

FOR YOUR SAFETY

Do not store or use gasoline or other flammable vapors and liquids in the vicinity of this or any other appliance.

WHAT TO DO IF YOU SMELL GAS

- Open windows
- Do not try to light any appliance.
- Do not touch any electrical switch; do not use any phone in your building.
- Immediately call your gas supplier from a neighbor's phone. Follow the gas supplier's instructions.
- If you cannot reach your gas supplier, call the fire department.

WARNING

If the information in this manual is not followed exactly, a fire or explosion may result causing property damage, personal injury or loss of life. Installation and service must be performed by a qualified installer, service agency or the gas supplier.

Do not store or use gasoline or other Flammable vapors and liquids in the vicinity of this or any other appliance.

PLEASE KEEP THESE OPERATING INSTRUCTIONS FOR FUTURE REFERENCE.

SAFETY PRECAUTIONS

FOR SAFE INSTALLATION AND OPERATION OF YOUR "ENVIROGAS" STOVE, PLEASE, CAREFULLY READ THE FOLLOWING INFORMATION:

- All "ENVIROGAS" gas-fired appliances must be installed in accordance with these instructions. Carefully read all the instructions in this manual first. Consult the building authority having jurisdiction to determine the need for a permit prior to commencing the installation.

- **NOTE** Failure to follow these instructions could cause a malfunction of the fireplace which could result in death, serious bodily injury, and/or property damage.
- Failure to follow these instructions may also void your fire insurance and/or warranty.

GENERAL

- Installation and repair should be done by a qualified service person. The appliance should be inspected before use and at least annually by a qualified service person. More frequent cleaning may be required due to excessive lint from carpeting, bedding material, etc. It is imperative that control compartments, burners and circulating air passageways of the appliance be kept clean.

- Due to high temperatures the appliance should be located out of high traffic areas and away from furniture and draperies. Children and adults should be alerted to hazards of high surface temperatures and should stay away to avoid burns or clothing ignition.

- Young children should be carefully supervised when they are in the same room as the appliance.

- Clothing or other flammable material should not be placed on or near the appliance.

FOR YOUR SAFETY

- Installation and service must be performed by a qualified installer, service agency or the gas supplier.

- This installation must conform with local codes or, in the absence of local codes with the current CAN 1-B 149 installation code in Canada or the National Fuel Gas Code ANSI Z223.1.2 in the USA.

- To prevent injury do not allow anyone who is unfamiliar with the operation to use the stove.

- Always keep the area around these appliances clear of combustible material, gasoline or other flammable vapors and liquids.

- These appliances should not be used as a drying rack for clothing or for hanging Christmas stockings or decorations.

- Due to the paint curing on the stove a faint odor and slight smoking will likely be noticed when the stove is first used. Open a window until the slight smoking stops. Always connect this gas stove to a chimney and vent to the outside of the building envelope. Never vent to another room or inside a building. Make sure you use the vent pipe that is specified. Make sure that the vent is properly sized and is of adequate height to provide the proper draft. Inspect the venting system annually for blockage and any signs of deterioration.

- **Do not operate with cracked or broken glass. Under no circumstances should this appliance be modified. Parts that have to be removed for servicing must be replaced prior to operating this appliance. Only parts supplied by Envirogas should be used in this appliance and replacements should only be performed by a licensed or qualified service person.**

- Never use solid fuels such as wood, paper, cardboard, coal, or any other flammable liquids etc., in this appliance.

- Do not use this heater if any part has been under water. Immediately call a qualified service technician to inspect the heater and to replace any part of the control system and any gas control which has been under water.

- Do not abuse glass by striking or slamming door shut.

TABLE OF CONTENTS

1 Code Approvals 2
2 Specifications 2
3 Assembly Instruction 3
4 Electrical Requirements 4
5 Deciding where to locate your stove 4
6 Gas Line Connection 5
7 Gas Pipe Testing 6
8 Venting 7
9 Installation of Log Sets and Embers 9
10 Lighting Instructions 10
11 Routine Maintenance 11
12 Air Shutter Adjustment 11
13 Trouble Shooting 12
14 Parts and Accessories 13
15 Warranty 14
16 Installation Data Sheet 15

1. CODE APPROVALS

• Direct Vent Type is designated by the suffix DV. This type of appliance draws all of it's air for combustion from outside of the dwelling through specially designed vent pipe.

These appliances have been tested by Warnock Hersey and found to comply with the established standards for DIRECT VENT GAS FIREPLACE and DIRECT VENT WALL FURNACES in CANADA and the USA as follows:-

LISTED GAS FIRED GRAVITY DIRECT VENT WALL FURNACE (EG.95.FS.DV.Nat.& LPG)
TESTED TO: ANSI Z21.44-1991 GAS FIRED FAN TYPE DIRECT VENT WALL FURNACE CAN/CGA 2.19-M81 GAS FIRED GRAVITY AND FAN TYPE DIRECT VENT WALL FURNACE. CGA INTERIM REQUIREMENT NO.41-1991 DIRECT VENT GAS FIREPLACES CGA INTERIM REQUIREMENT NO.55 Revision 1 - ADDITIONAL REQUIREMENTS FOR DIRECT VENT FIREPLACES.
MOBILE HOME APPROVED: LPG (Propane) ONLY, not convertible. This appliance must be installed in accordance with the current standards - Canada CSA Z240.4. USA manufactured home construction and safety standard title 24 CFR, Part 3280. This appliance is not certified for O.E.M. installation.

2. SPECIFICATIONS

ENVIROGAS 95 FREESTANDING DIRECT VENT MODELS

- have all been certified for use with either natural or propane gases. (see appropriate labeling on control panel label.)
- are not for use with solid fuels.
  are approved for bedroom or bedsitting room.
  must be installed in accordance with local codes if any. If none exist use current installation code CAN/CGA B149 in Canada or ANSI Z223.1/NFPA 54 in the USA.
- must be properly connected to a venting system.
- are not approved for closet or recessed installations.

The efficiency rating of this appliance is a product thermal efficiency rating determined under continuous operating conditions and was determined independently of any installed system.

FOR INSTALLATIONS ABOVE 2000 FEET

- In Canada, these appliances are certified for altitudes of 0-2,000' and must be derated by 10% for installation at elevations between 2,000 and 4,500'.
- In the USA, the appliance must be derated 4% for every 1,000' above 2,000' elevations.

ORIFICE SIZES, PRESSURES AND BTU'S	NATURAL	PROPANE
FRONT BURNER:	#48 DMS	#59 DMS
REAR BURNER:	#38 DMS	#52 DMS
Manifold Press: ("W.C.)	3.5"	10.0"
Min. Manifold Press:	1.8"	6.2"
Max. Supply Press:	7.0"	13.0"
Min. Supply Press:	4.5"	10.5"
Max. BTUH Input:	40,000	38,000
Min. BTUH Input:	30,000	30,000

DIMENSIONS:

Front Width:	25"/63cm
Rear Width:	25"/63cm
Height:	29"/74cm *
Depth:	20"/51cm
Shipping Weight:	256 lbs/116 kg

(*not including vent coupling)

All models are equipped with a variable output gas control.

CLEARANCES TO COMBUSTIBLES:

A. Side wall to stove	10"
B. Rear wall to stove	4"
C. Combustible to stove Top	58"
D. Floor to stove	0"
E. Corner clearance	2"
F. Alcove depth	48"

Maintain sufficient clearances for service and maintanance

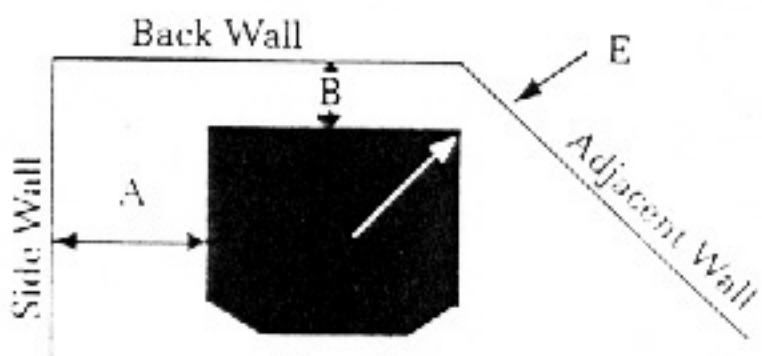

Figure 1

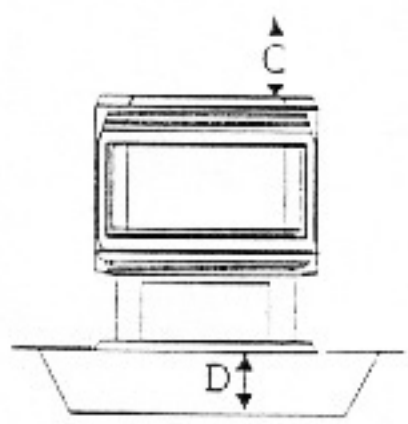

3. ASSEMBLY INSTRUCTIONS

PREPARATION FOR INSTALLATION

- Remove the packaging from the appliance, and check to make sure there is no damage. In the event damage is found, please report it to both the carrier and your dealer as soon as possible.
- Before beginning, carefully check the glass door and the log set. Check to make sure there is no hidden damage to the logs or any other component

ASSEMBLING YOUR ENVIROGAS APPLIANCE

- Open the two hinged side panels, open the door and remove the two wood screws that secure the stove to the pallet.
- Place the stove on its back on the pallet. Pre thread the 4 holes in the base of the stove that secure the pedestal to the stove using the 4 screws, with 5/16 hex washer heads, provided. Place pedestal so that the holes in the base of the stove align with those in the pedestal and secure by hand first. Then tighten with a 5/16 socket wrench.
- Return unit to upright position.
- Remove burner control assembly and tray from its box. Check for damage.
- On LP burners lossen the 2 screws that hold the venturi covers, there is one screw for the front and one for the beak venturi. Loosen sufficiently so you can move the covers after the burner tray is installed in the stove. Do not remove. (See figure 12)
- Install 3/8" elbow (not provided) to valve and install burner control assembly by the following procedures:-

1) Open the 2 hinged side panels and open the door
2) Remove the 10 screws from firebox bottom (including those holding ember tray shroud)
3) Place assembly through the bottom of the firebox making sure that
   - A-The labeled surface is to the front
   - B-You do not snag any of the wires
   - C-The assembly rests squarely on the bottom of the fire box.
4) Secure burner control assembly and ember tray shroud with the 10 screws previously removed.
5) Make all electrical connections as per wiring diagram shown in figure 2.
6) The stove is now ready to be connected to the gas supply.
7) Install logs as per section 9.

4. ELECTRICAL REQUIREMENTS

The ENVIROGAS EG.95.FS.DV. will operate ...th no external electrical power supply. These models have a Millivolt gas control which uses the pilot flame to generate enough electricity to operate the main burner.

The appliance when installed, must be electrically connected and grounded in accordance with local codes or in the absence of local codes, with the current CSA C22.1 CANADIAN ELECTRICAL CODE, Part 1, SAFETY STANDARDS FOR ELECTRICAL INSTALLATIONS, or THE NATIONAL ELECTRICAL CODE ANSI / NFPA 70 in the USA.

NOTE:

- Operation of the fan increases the efficiency and the heat output of the appliance.
- The Thermostat connects to the two purple wires in the harness.
- Control panel light uses a. 7w Max. Replacement bulb.
- **If this unit is installed in a mobile home it must be connected to a grounding rod.**
- **If this unit is installed in a mobile home it must be bolted securely to the floor.**

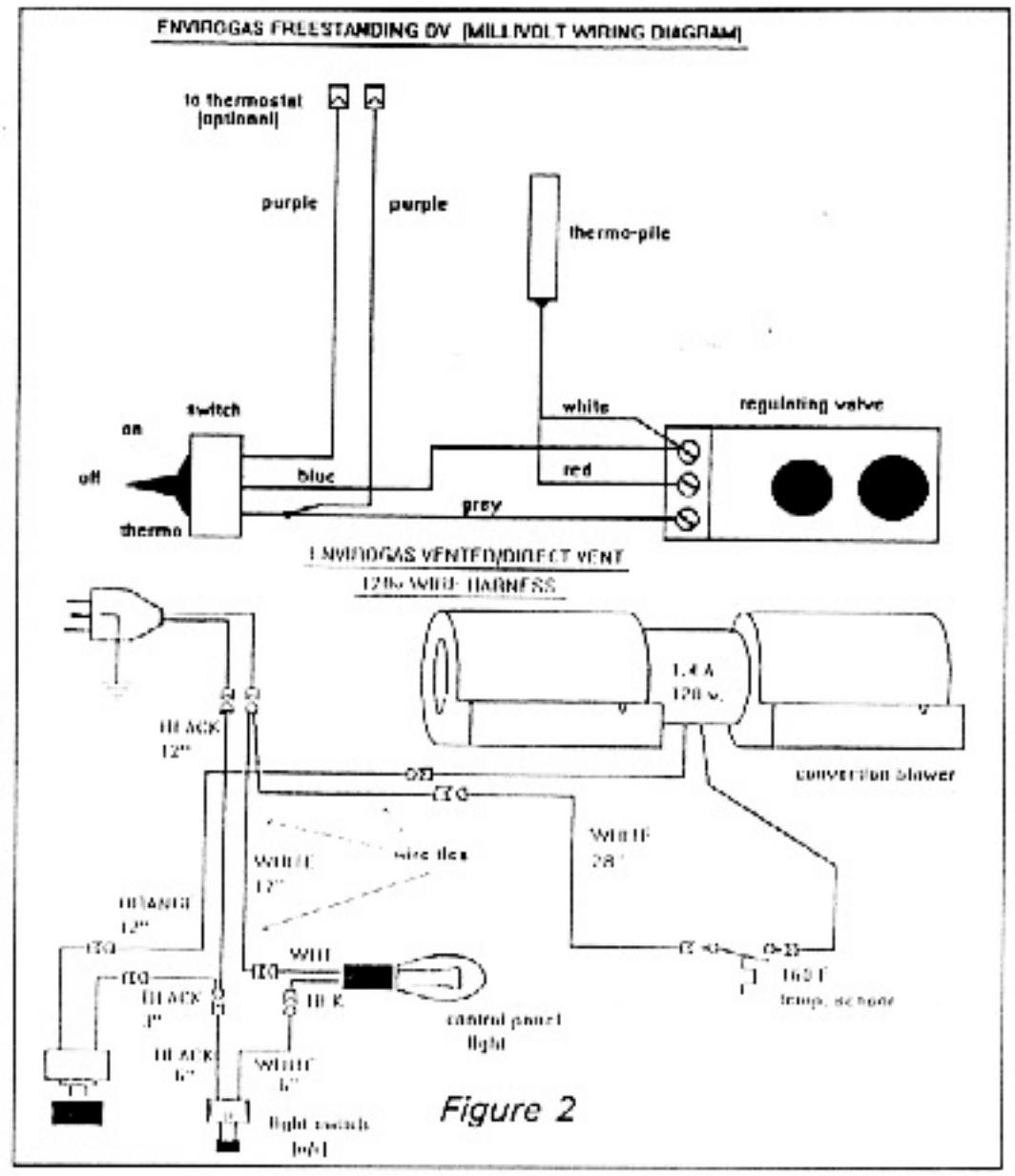

Figure 2

CAUTION

Label all wires prior to disconnection when servicing controls. Wiring errors can cause improper and dangerous operation. Verify proper operation after servicing.

WARNING: Electrical grounding instructions. This appliance is equipped with a three-prong (grounding) plug for your protection against shock hazard and should be plugged directly into a properly grounded three-prong receptacle. DO NOT cut or remove the grounding prong from this plug.

5. DECIDING WHERE TO LOCATE YOUR STOVE

1. The stove should be located out of traffic and away from furniture and draperies.
2. This stove should have sufficient access for its safe operation and maintenance.
3. Locate a position where the flue system of the stove can be properly installed without damaging the integrity of the building. e.g. cutting wall or ceiling joists.
4. The stove can be installed on any wooden or noncombustible flat surface extending the full width ...d depth of the appliance.
5. Check stove and flue system clearance requirements.
6. Locate the stove where it can be accessed by a gas supply line.
7. Locate the stove in a large and open room that is centrally located in the house. This will optimize heat circulation and comfort.
8. As the stove is equipped with a convection fan, ensure that an electrical outlet is within 6ft. (1.8m) of the stove.
9. These stoves can be installed in bedrooms.
10. The flow of combustion and ventilation air must not be obstructed.

PRIMARY INSTALLATION

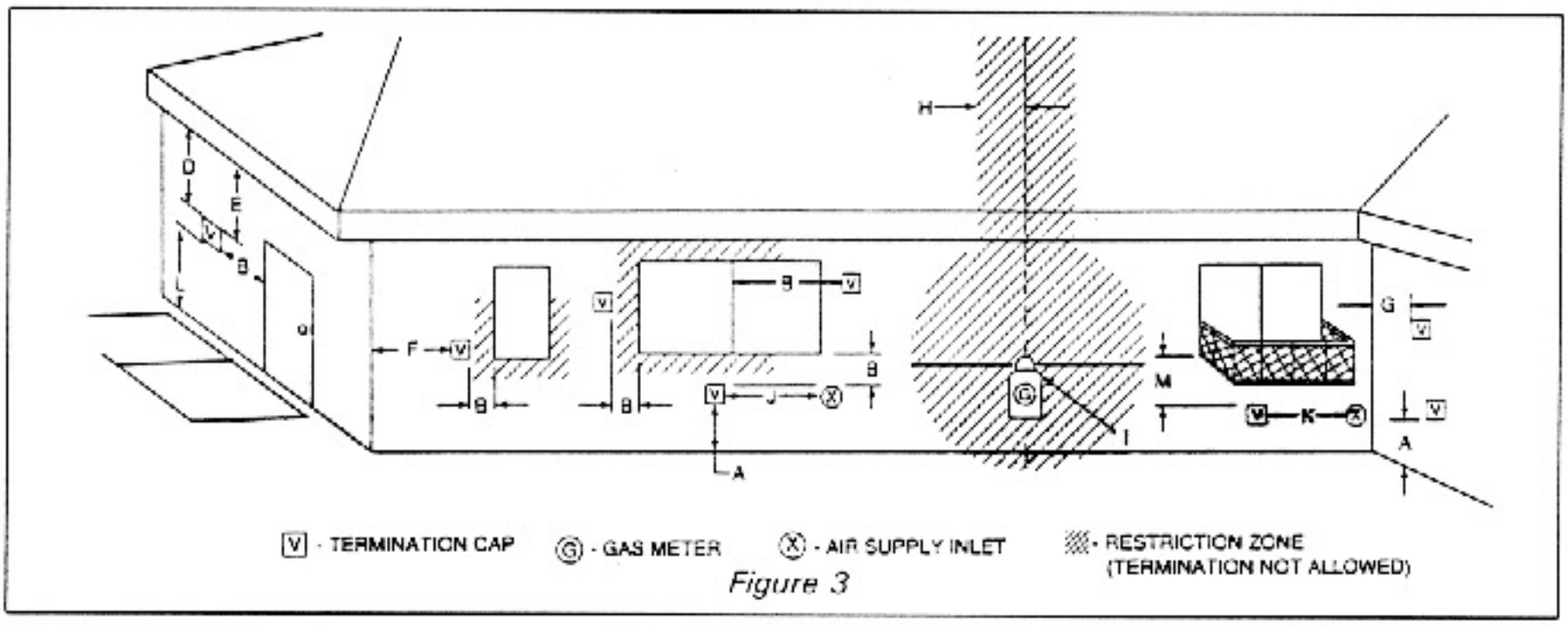

Figure 3

A = Clearance above grade, verandah, porch, deck, or [balcony (*12 inches (30cm) minimum]

B = Clearance to window or door that may be opened [*12 inches (30cm) minimum]

C = Clearance to permanently closed window [minimum 12 inches (30cm) recommended to prevent condensation on window]

D = Vertical clearance to ventilated soffit located above the terminal within a horizontal distance of 2 feet (60cm) from the center-line of the terminal 24 inches (60cm) minimum

E = Clearance to unventilated soffit [18 inches (45cm) minimum]

F = Clearance to outside corner [12 inches minimum]

G = Clearance to inside corner [*12 inches minimum]

H = *Not to be installed above a meter/regulator assembly within 3 feet (90cm) horizontally from the center-line of the regulator

I = Clearance to service regulator vent outlet [*6 feet (1.8m) minimum]

J = Clearance to non-mechanical air supply inlet to building or the combustion air inlet to any other appliance [12 inches (30cm) minimum]

K = Clearance to a mechanical air supply inlet [*6 feet (1.8m) minimum]

L = *** Clearance above paved side-walk or paved driveway located on public property [*7 feet (2.1m) minimum]

M = Clearance under verandah, porch, deck, or balcony [*24 inches (60cm) minimum **]

*** A vent shall not terminate directly above a side-walk or paved driveway which is located between two single family dwellings and serves both dwelling

** Only permitted if verandah, Porch, deck, or balcony, is fully open on a minimum of 2 sides beneath the floor

* As specified in CGA B149 Installation Codes (1991) Note: Local Codes or Regulations may require different clearances

6. GAS LINE CONNECTION

WARNING: Only persons licensed to work with gas piping may make the necessary gas connections to this appliance.

Remove panel at rear of pedestal for ease of connection.

Install 3/8" elbow into valve before placing control assembly into unit as per instructions in section 3 "ASSEMBLY". The appliance requires connection from the valve to the gas supply line, through the hole in the rear of the pedestal.

NOTE: The gas line connection may be made using 3/8" rigid tubing or an approved flex connector. Since some municipalities have additional local codes it is always best to consult your local authorities and the CAN/CGA-B149 (1 or 2) Installation Code. For USA gas installations follow either local codes or the current edition of the National Fuel Gas Code ANSI.Z223.1.

UPON CONNECTION MARK APPROPRIATE FUEL TYPE ON WARNOCK HERSEY RATING LABEL LOCATED ON THE INSIDE OF THE RIGHT HAND SIDE PANEL.

7. GAS PIPE TESTING

INLET GAS SUPPLY PRESSURE

	DESIRED PRESSURE	MINIMUM PRESSURE	MANIFOLD PRESSURE
NAT	7.0 in.w.c.	4.5 in.w.c.	3.5 in.w.c.
LPG	11.0 in.w.c.	10.5 in.w.c.	10. in.w.c.

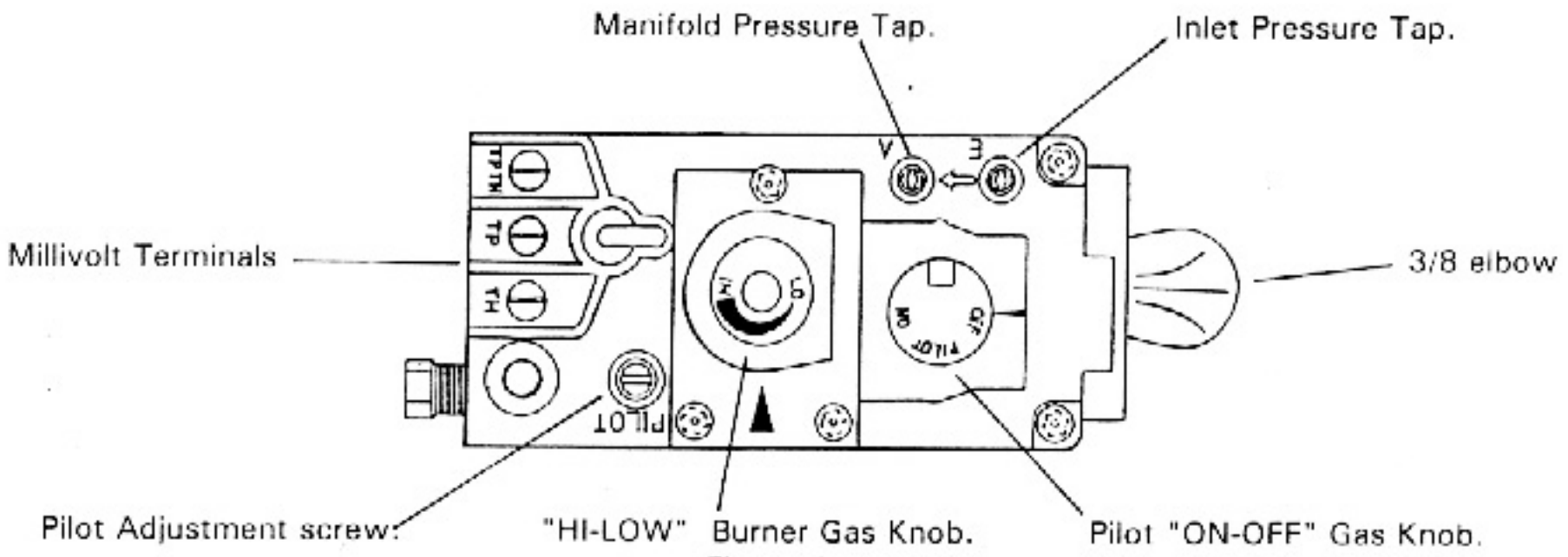

Figure 4

The appliance and its shutoff valves must be disconnected from the gas supply piping system during any pressure testing where the pressure exceeds 1/2 PSIG (3.45 kpa) or damage will occur to the valve.

The appliance must be isolated from the gas supply piping system by closing its individual manual shutoff valve during any pressure testing of the gas supply piping system at test pressures equal to or less than 1/2 psig (3.5 kPa).

TO TEST

The pressure taps are located in the top right corner on the valve face (right - inlet, left - manifold pressure).

- Turn set screw counter clockwise to loosen, 2 turns.
- Place 5/16" hose over pressure tap system.
- When finished, release pressure, remove hose & tighten set screw.

Always check for gas leaks with a soap and water solution after completing the required pressure test.

When using copper or flex connectors use only fittings approved for gas connections.

The gas control inlet is 3/8" NPT.

NEVER USE AN OPEN FLAME FOR LEAK TESTING.

8. VENTING (using Simpson Duravent pipe)

These models have been tested and certified for use with SIMPSON DURAVENT TYPE DIRECT VENT "GS" PIPE FOR GAS STOVE. Kits are available for venting either through the side wall or vertically through the roof. It is recommended that a bead of RTV High Temperature Silicone be applied to each vent joint.

A. SIDE WALL VENTING

THIS APPLIANCE MUST BE INSTALLED WITH A MINIMUM VERTICAL LENGTH OF 24" TO THE FIRST 90 DEGREE ELBOW. WITH THIS MINIMUM VERTICAL RISE HORIZONTAL RUNS OF FROM ONE TO THREE FEET ARE PERMITTED TO REACH THE OUTSIDE VENT TERMINATION.

VENTING TERMINALS CANNOT BE RECESSED INTO A WALL OR SIDING.

FOLLOW THE VENTING FIGURE #3 PRECISELY BEFORE BEGINNING THE INSTALLATION TAKING CARE TO ENSURE AN APPROPRIATE OUTSIDE LOCATION FOR THE VENT TERMINATION CAN BE ACCOMMODATED.

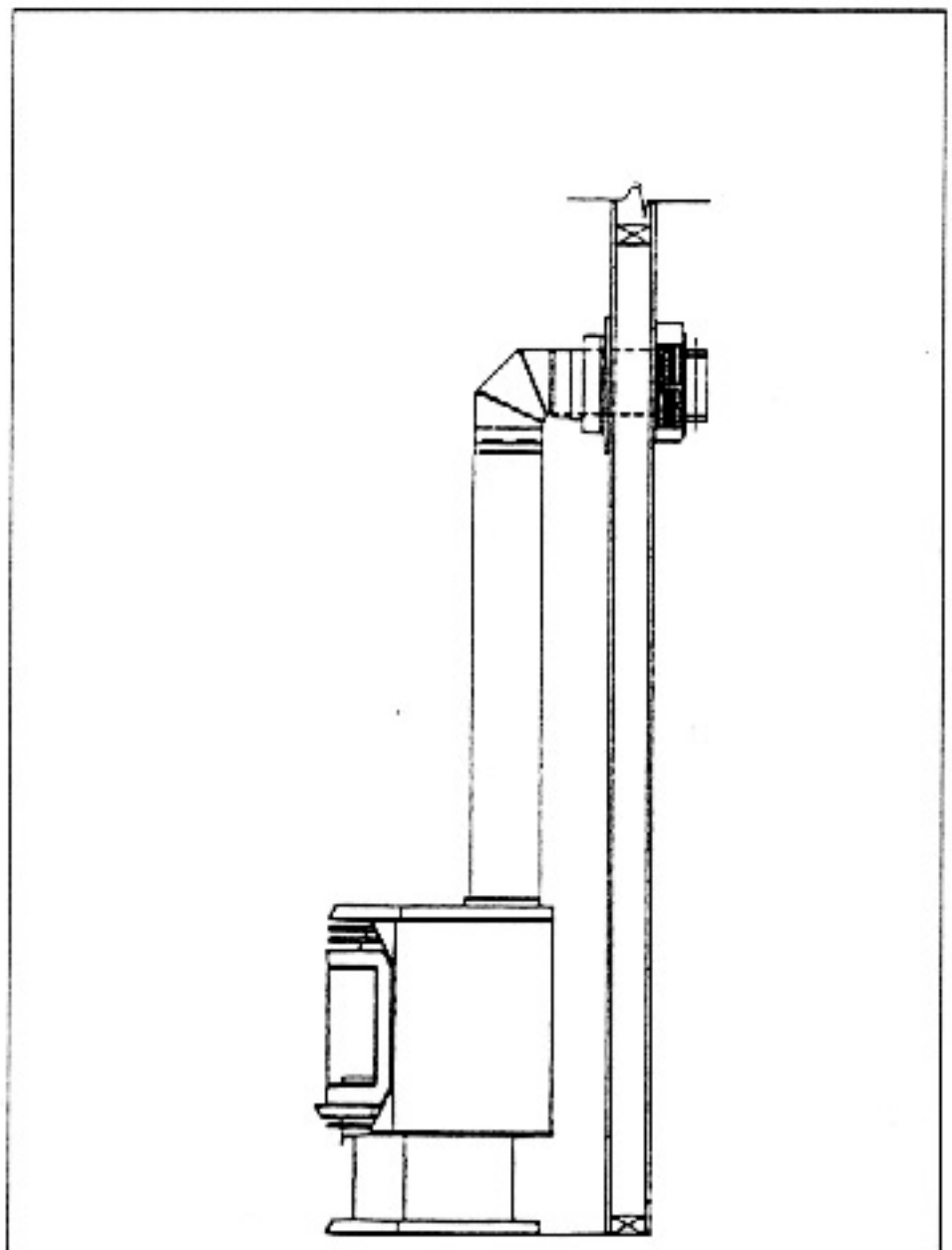

Figure 5

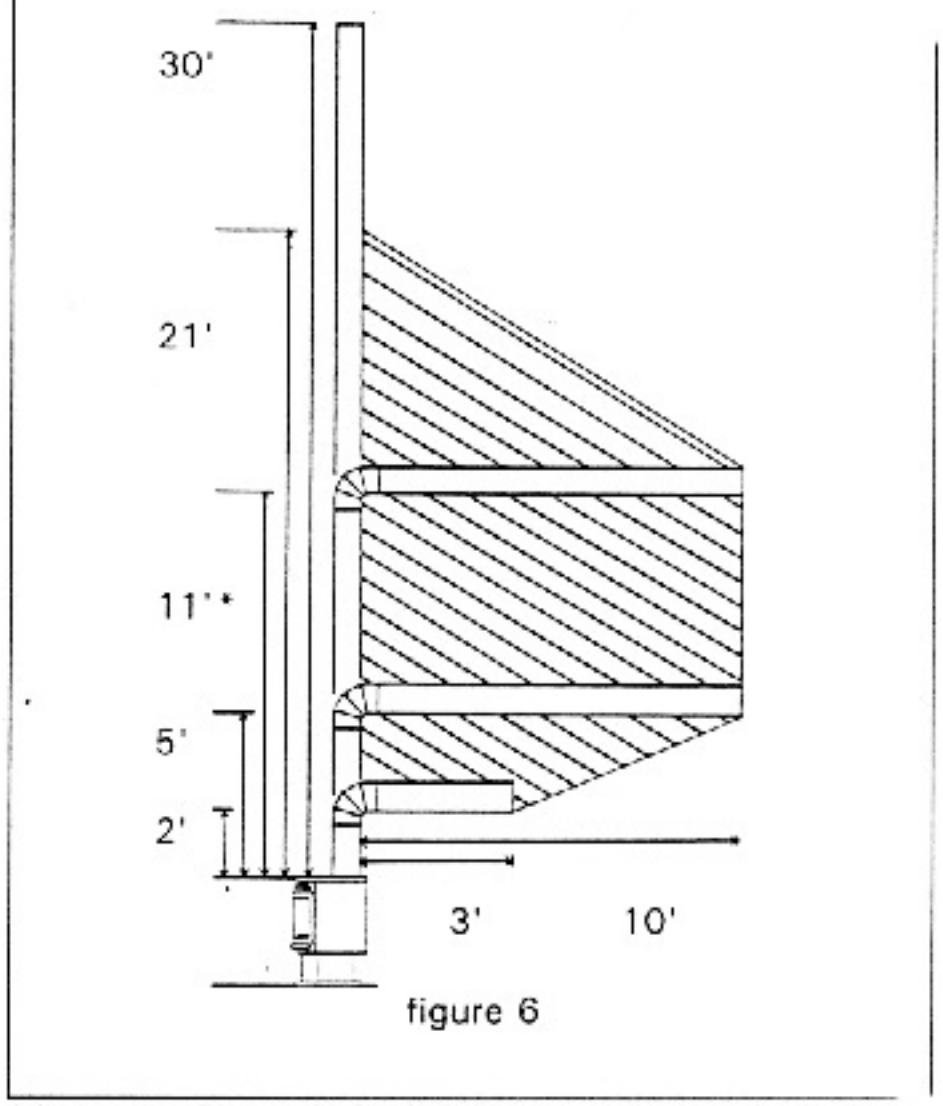

figure 6

After your ENVIRO GAS 95 stove has been placed in its proposed position, determine if any wall studs or roof rafters will be in the way when the venting system is attached. If this is so, you may want to adjust the location of the appliance.
This pipe system has a twist lock connection system and must be installed with a quarter inch rise for every 2 feet horizontal. Follow Vent Pipe Manufacturers instructions for assembly and installation.

To join vent pipe: Place a bead of high tempreture sealant to the outside of the male end of the vent pipe, align the tabs on the inside of the female vent end with the slots on the male end of the adjoining piece. Press together (approx.1") then twist clockwise to lock.

B. STANDARD VENT INSTALLATION

Note: When passing vent through wall Maximum allowable wall thickness 10 " (254 cm).1 $^{1}/_{2}$"
Clearance to combustibles must be maintained.
1. Cut a hole through the wall behind the stove centered 58"/147cm above the floor and frame in 10"x10" opening. Repair the wall as necessary.
2. Attach the 24" length of pipe to the stove and lock in place.
3. Attach the required horizontal length of pipe to the 90° elbow and lock in place. It is required that all vent joints be sealed.
4. Attach the 90° elbow to the top of the 24" pipe so that the pipe faces the hole cut in the wall.

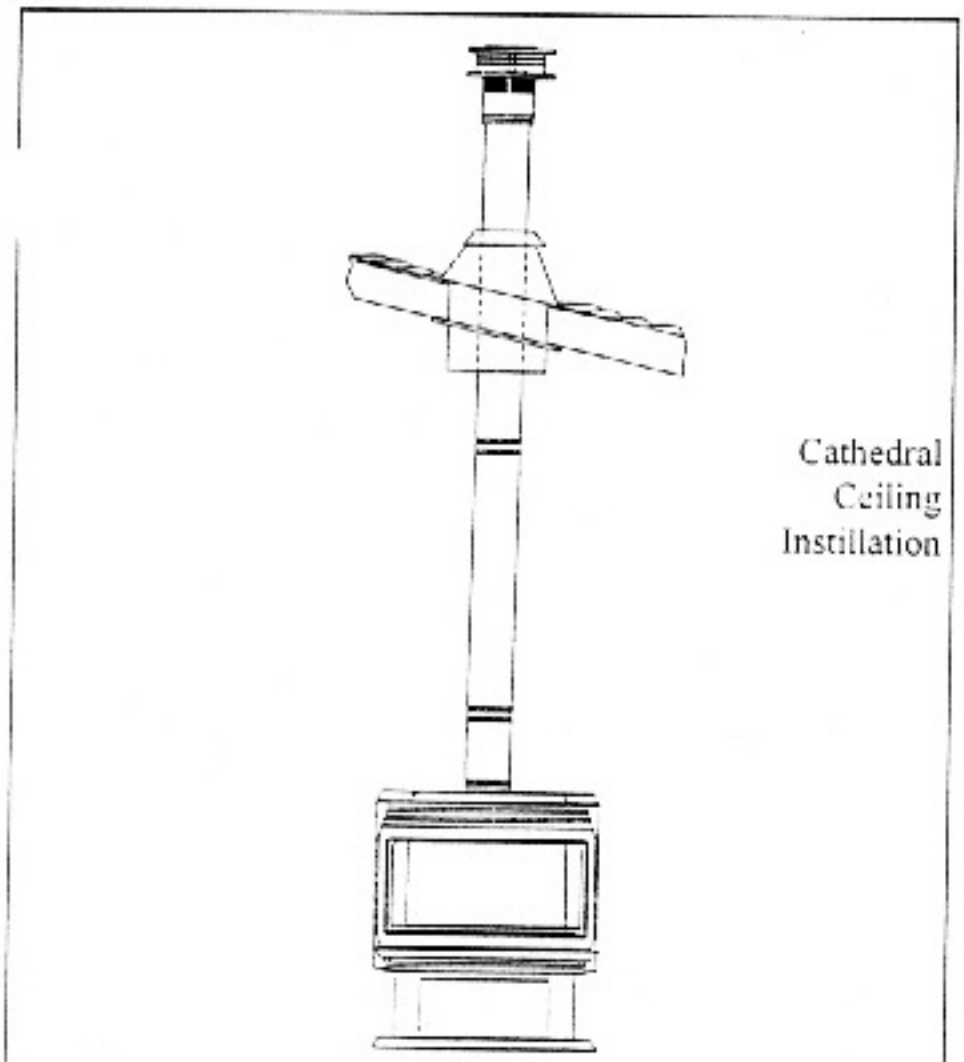

Cathedral Ceiling Instillation

Figure 7

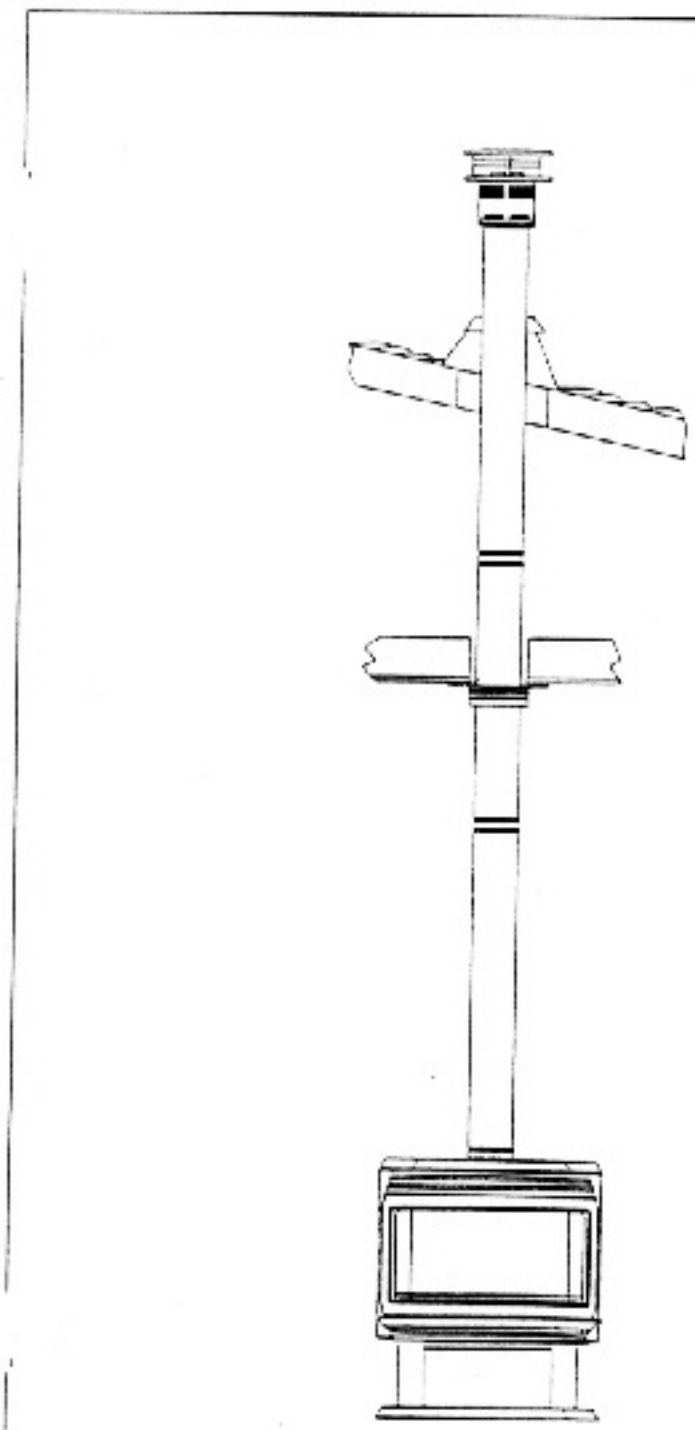

Figure 8

5. Place the wall thimble over the pipe and push the stove toward the wall so the pipe goes into the hole cut in the wall.
6. On the outside attach the standard vent terminal to the pipe and secure it to the wall.
7. Inside, secure the wall thimble to the wall.
8. For proper operation, any additional pipe must conform to the venting graph in Figure 6.

If extra elbows are being used overall allowable length will be reduced by 3ft. per additional elbow. (* see figure 6)

For natural gas a restrictor is required after 11ft. Of vertical rise.

C. VERTICAL VENT INSTALLATION

(flat ceiling mount)

NOTE: Cathedral ceiling requires a different support box than a flat ceiling. Support box is **not** included in the kit.

ALSO: If the roof is steeper than 6/12 you will need flashing #842-0160.

1. Place the stove in its final position and locate the point of penetration through the ceiling with a plumb line. If this location will hit a rafter or a ceiling joist you may want to move the stove. This same procedure should be followed when cutting the roof opening.

2. Once the location is determined, cut a hole in the ceiling and frame a 10" opening. Repair the ceiling as needed. Mount the support box.

3. Run vent pipe from stove through the support box and flashing and terminate through the ceiling hole.

4. If off set is required clamp pipe ever 3ft. to avoid excessive stress.

5. Attach the ceiling support box to the ceiling.

6. Cut an opening in the roof providing 1 1/2" clearance to any combustible materials and run galvanized pipe from the support through the roof.

7. Install the roof flashing and storm collar and ensure the roof won't leak.

8. Install vent terminal to top pipe section.

9. For 2 storey installations fire stops are required in each storey.

10. For cathedral ceilings use cathedral ceiling box.

11. Any occupied areas above the first floor, including closets and storage spaces. Which the vertical vent passes through, must be enclosed, the enclosure may be framed and sheet rocked with standard construction materials, however, be sure to maintain minimum allowable clearances of 4" between the outside of the vent pipe and the combustible surfaces of the enclosure.

9. INSTALLATION OF LOG SET and EMBERS

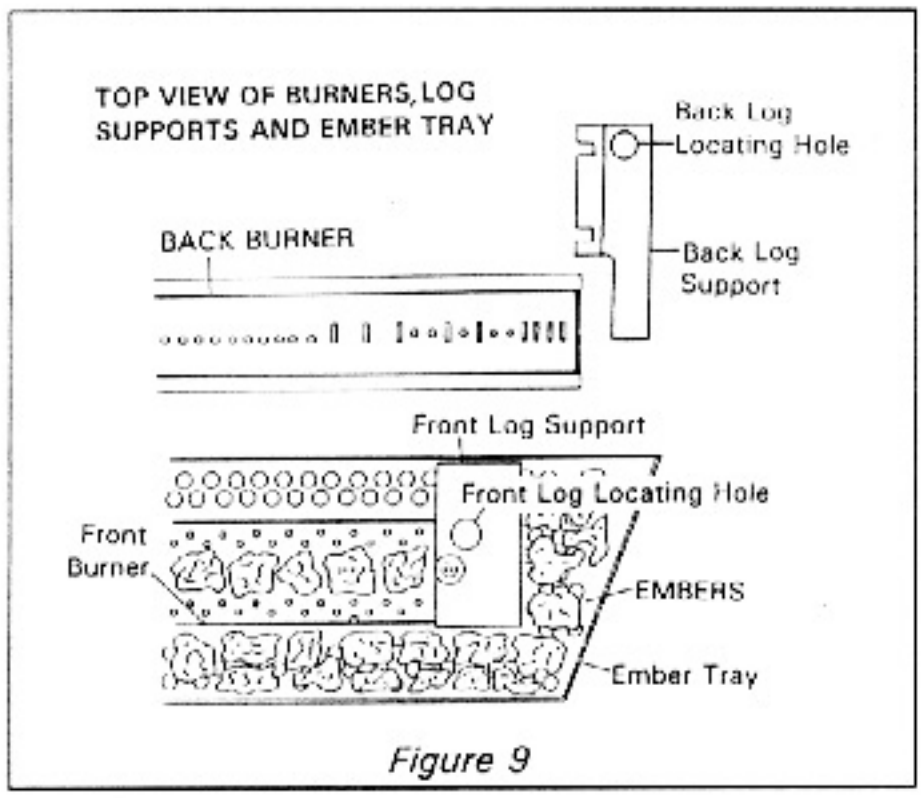

Figure 9

a. INSTALLING THE GLOWING EMBERS

A bag of ceramic fiber embers is provided for use on the front burner tray.

CAUTION: Use only the amount and type of ember material supplied with this appliance. The use of other foreign materials on the burners can create dangerous conditions.

If over time, through cleaning and servicing these embers require replacement, contact your nearest ENVIROGAS dealer for an approved replacement embers kit.

1. Gently remove the ember material from the plastic bag.

2. Spread these pieces evenly across the front of the ember tray and around the sides, so that the bottom front of the tray can no longer be seen. Place a single layer of embers on top of the front burner.

3. Carefully avoid any clumping or large build ups.

4. Do not pack down, leave embers loosely layered.

5. **DO NOT PLACE EMBERS ON THE REAR BURNER.**

6. Upon the first light up, watch for smooth and fast ignition to **all** burner ports. If a long delay is noted:

a) First, wait for the appliance to cool down
b) Open the front door of the appliance.
c) Carefully reposition the embers making sure that all burner ports light.
d) Check to ensure that no burner ports are plugged solid.

CAUTION: NEVER OPERATE THIS APPLIANCE WITH THE DOOR REMOVED

INSTALLING THE 4 PIECE LOG SET

The log set for the ENVIROGAS is shipped in a separate carton contained in the pedestal. Check to ensure there is no damage to any of the four (4) logs. It is very important to install these logs in their proper position to insure safe operating conditions. (SEE LOG PLACEMENT Figure 10)

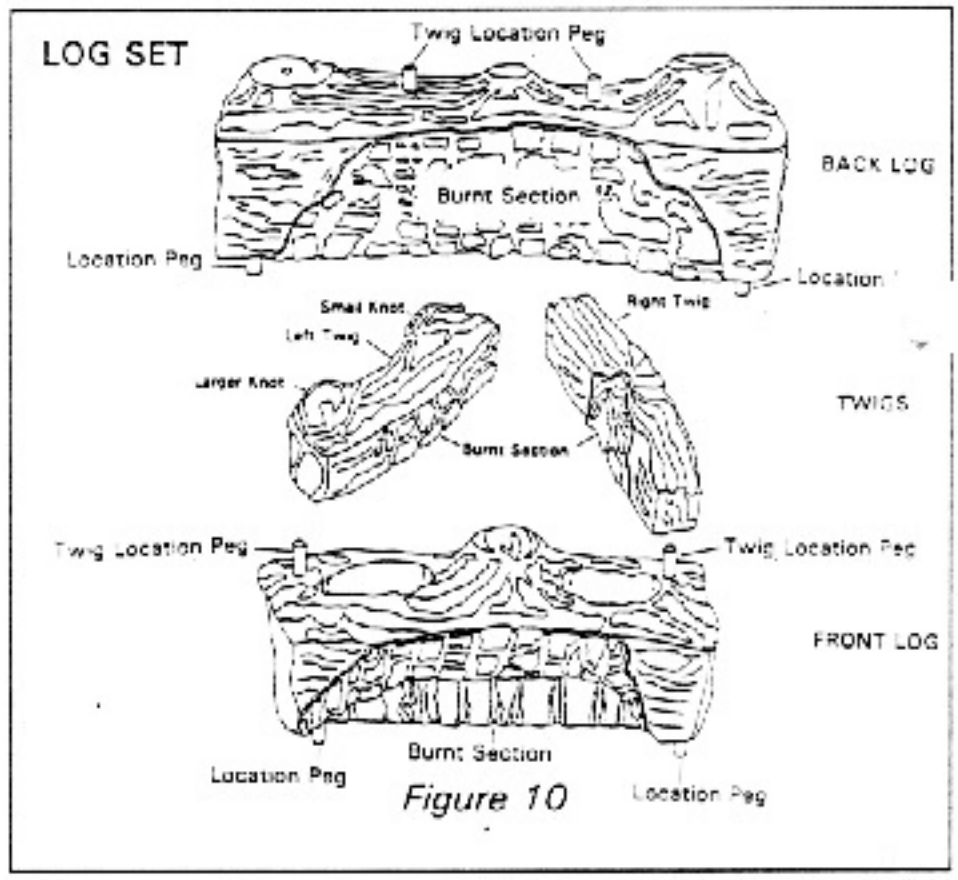

Figure 10

1. Open the front door.

2. Remove logs carefully from the carton.

3. Place rear fiber log with Burnt Area forward on rear log supports. By matching bottom pegs to the receiving holes in rear log holder.

4. Place front fiber log on front log supports. By matching pegs to the front receiving holes in front log holder.

5. Place the two cross logs on the positioning pegs according to the diagram shown above.(Figure 10)

10. LIGHTING INSTRUCTIONS

WARNING: Improper installation, adjustment, alteration, servicing or maintenance can result in personal injury and property damage. Always refer to this manual for normal maintenance requirements. For further assistance or additional information consult a qualified gas installer, your ENVIROGAS dealer or your local gas supplier.

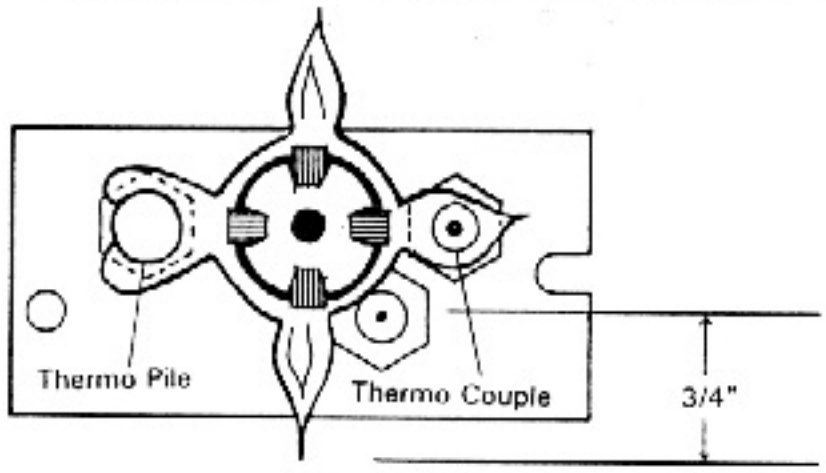

Figure 11

1. Check to ensure that all burner ports are lit and burning properly.

2. Check to ensure that the right branch of the pilot flame is engulfing the thermocouple tip, while the left branch of the pilot flame is engulfing the thermopile and the other two branches are long enough to light the front and rear burners.

3. Check to ensure that the main burners lights instantly when the on switch is turned on and that the flame carries across the burners evenly.

FOR YOUR SAFETY READ BEFORE OPERATING

WARNING: IF YOU DO NOT FOLLOW THESE INSTRUCTIONS EXACTLY, A FIRE OR EXPLOSION MAY RESULT CAUSING PROPERTY DAMAGE, PERSONAL INJURY OR LOSS OF LIFE.

A) This appliance is equipped with a pilot which must be lit by hand while following these instructions exactly.

B) Before operating smell all around the appliance area for gas and next to the floor because some gas is heavier than air and will settle on the floor.

WHAT TO DO IF YOU SMELL GAS

- Turn off all gas to the appliance.
- Open windows.
- Do not try to light any appliance.
- Do not touch any electric switch. Do not use any phone in your building.
- Immediately call your gas supplier from a neighbor's phone. follow the gas supplier's instructions.
- If you cannot reach your gas supplier call the fire department.

C) Use only your hand to turn the gas control knob. Never use tools. If the knob will not push in or turn by hand do not try to repair it. Call a qualified service technician. Force or attempted repair may result in a fire or explosion.

D) Do not use this appliance if any part has been under water. Immediately call a qualified service technician to inspect the appliance and replace any part of the control system and any gas control which has been under water.

LIGHTING INSTRUCTIONS

WARNING: The gas valve has an interlock device which will not allow the pilot burner to be lit until the thermocouple has cooled. Allow approximately 60 seconds for thermocouple to cool.

1. **Stop!** Read the above safety information on this label.
2. Turn the gas "hi-low" knob to the lowest level.
3. Turn off all electric power to the appliance.
4. Set the "on/off" burner switch to the "off" position.
5. Depress slightly & turn pilot gas knob clockwise ↷ to the "off" position.
6. Wait five (5) minutes to clear out any gas. If you smell gas including near the floor, STOP! Follow "B" in the above safety information on this label. If you don't smell gas go to next step.
7. Find pilot located in front of rear log.
8. Depress slightly & turn pilot gas knob counter-clockwise ↶ to "pilot".
9. Depress fully and hold pilot gas knob while lighting the pilot with the push button "**spark ignitor**". Keep knob fully depressed for 15 seconds. then release. If pilot does not continue to burn repeat steps 5 through 8.
10. Wait 1 minute. depress slightly & turn pilot gas knob counter clockwise ↶ to the "**on**" position. turn the "on/off" burner switch to the "**on**" position (or "**thermostat**" position when equipped).
11. Turn gas "hi-low" knob to desired setting.
12. Turn on all electric power to the appliance.

TO TURN OFF GAS

1. Turn off all electric power to the appliance if service is to be performed.
2. Place "on/off" burner switch to "off" position.
3. Depress pilot gas "hi-low" control knob slightly and turn clockwise ↷ to "off". Do not force.

EG95L2E

11. ROUTINE MAINTENANCE

For cleaning, turn the gas control knob to the "OFF" position. This will extinguish the pilot flame. Wait at least, five (5) minutes before cleaning.

CLEANING OF GLASS

Do not clean glass when hot

It will be necessary to clean the ceramic glass periodically. During a cold start up condensation will sometimes form on the glass, this is a normal condition with all gas fireplaces and stoves. However, sometimes this condensation can allow dust and lint to cling to the glass surface. Also, sometimes initial paint curing of the appliance can leave behind a slight film on the glass. This is a temporary problem. It is therefore recommended that the glass be cleaned initially after about the first two weeks of use.

After that, depending upon the amount of use, cleaning should be required no more than two or three times per season.
To clean the door, use a mild glass cleaner and a soft cloth. Abrasive cleaners will damage the glass surface.

OPENING THE GLASS DOOR

Wait until the appliance has cooled down.

1. Open the hinged right hand side panel which will expose a door fastener. Using a 1/2" wrench, loosen off the fastener.

2. Due to the shape of the bay window door. You must also open the left hand side panel before attempting to opening the Bay window door.

3. Ensure the door is properly fastened after cleaning before attempting to re-light the appliance.

Glass/Door Replacement

The glass in this appliance is an integral part of the door assembly. If the glass is damaged or broken a replacement door assembly including glass must be fitted.
TO REPLACE DOOR AND GLASS ASSEMBLY

- open door fully
- Lift door vertically so that hinge pins lift out of hinge receivers.
- Return assembly to dealer

Door and glass assembly must be replaced as a complete unit by your Envirogas Dealer. No substitute materials are allowed.
Ceramic Glass size 11"x17" (28cm x 43cm), 2 at 11 x $4^{3}/_{4}$" (28cm x 12cm), 5mm thick.

FOR CLEANING THE INSIDE OF THE FIREBOX

Remove the log set carefully from the combustion chamber.

Gently remove the embers and place on a piece of paper towel. Until ready to replace.

Vacuum the burner compartment thoroughly.

Vacuum any dust on the logs and remove any lint from the main burner and pilot burner.

After carefully replacing the logs and embers in their correct positions, and the door has been resealed, re-light the pilot, following the instructions on the attached label. And turn on main burner.

CLEARANCES MUST BE SUFFICIENT TO ALLOW ACCESS FOR MAINTENANCE AND SERVICE

12. AIR SHUTTER ADJUSTMENT

- There is a separate air shutter for each burner
- Remove 1 screw from the cover plate located below the ash shelf. Loosen the other screw (Do Not Remove) swing the cover plate out of the way and tighten screw down to hold in place.
- On LP burners be sure to loosen the 2 set screws on the venturi before you install the burner into the unit as per instructions in section 3.
- With a long screwdriver rotate spring clips to open/close the shutter to desired setting.
- Re-install cover plate.

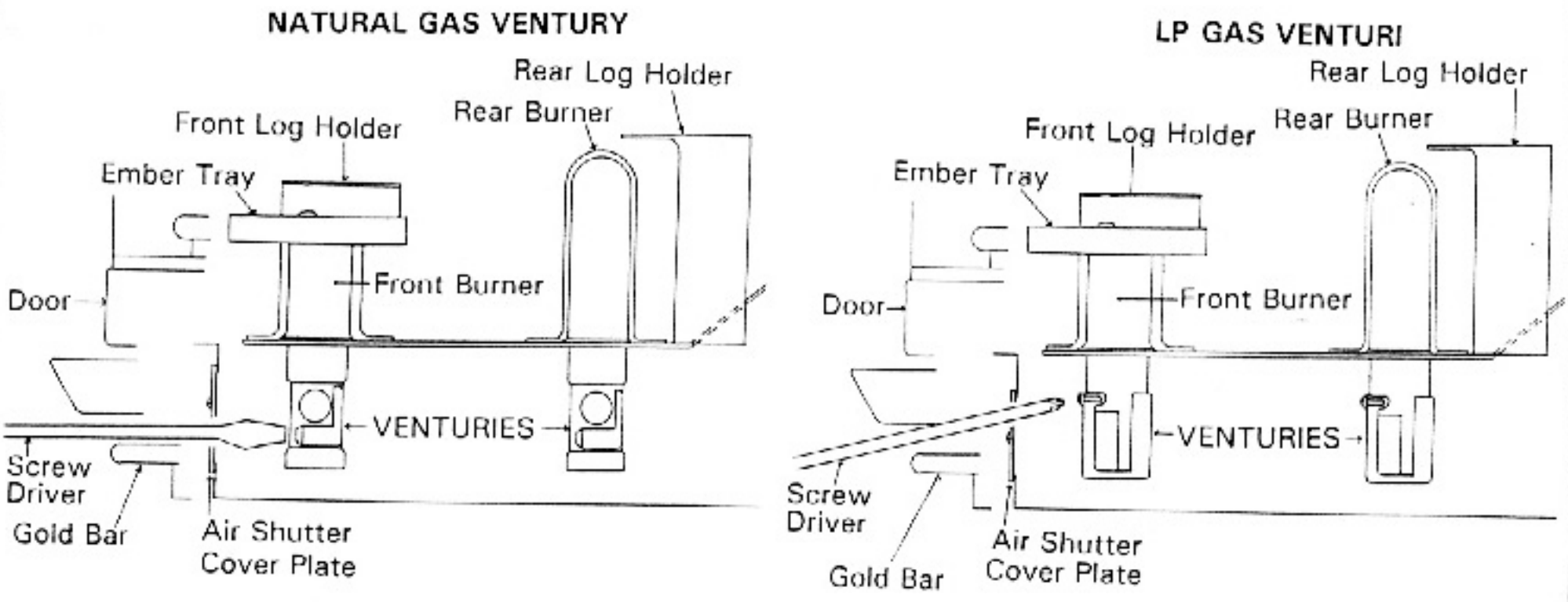

Figure 12

13. TROUBLE SHOOTING

Problem	Cause	Solution
Spark ignitor will not light the pilot after repeated pressing of spark ignitor	Defective ignitor	Check connections to ignitor -If ignitor connections are good but there is no spark-replace ignitor
	Misaligned spark electrode	-check for spark arcing from the electrode to pilot if not adjust by loosening screws on pilot base. Adjust and re-tighten
Pilot will not remain lit	Defective thermocouple	-check for proper connection of thermocouple to rear of valve
	Air in gas line	-bleed line -contact dealer
Burners will not light when valve and burner switch are both on	Defective switch	-check switch connections jump wires at switch
	Defective thermo-pile	-check connections to valve -contact dealer
	Thermostat set to low / defective	-turn up the thermostat to start unit. Check thermostat connections
Glass fogs up	normal condition	After the appliance warms up glass will clear -due to additives in gas glass may dirty -clean glass
Blue flames	Normal during start up	-flame will yellow as the appliance heats up
Sooting	Flame impingement	-check log position -increase primary air by opening shutters

Lubricating the blowers

1) unplug the unit
-remove rear access cover
-remove the two bolts holding the blower mounting plate to the unit
-pull blower and mounting tray out enough to access the lubricating holes on the top of the blower motor
-add 2 drops of a light weight machine oil.
re-install the blower assembly and access cover.

THIS OPERATION SHOULD BE PERFORMED EVERY 6 MONTHS

Tools required to assemble this unit:

Torx T-20 screwdriver, 5/16 socket, 1/2" wrench

14. PARTS AND ACCESSORIES

Service Parts available from your local Envirogas Dealer.

EG95FS NG BURNER	Nat Gas Burner Control Assembly
EG95FS CCM	Control Cover Magnet
EG95FS LP BURNER	LPG Burner Control Assembly
EG95FS SPM	Side Panel Magnet
EG95FS NG PILOT	Natural Gas Pilot Assembly
EG95FS DB	Door Bolt
EG95FS LP PILOT	LPG Pilot Assembly
EG95FS RDG	Relief Door Gasket
EG95FS RV NAT	NAT Regulating Valve
EG95FS RV LPG	LPG Regulating Valve
EG95FS GSI	Pezo Ignitor
EG95FS ON/OFF	Burner switch
EG95FS BV 220TS	B-vent spill switch 220°
EG95FS OB	Orifice Blank
EG95FS CVB	Convection Blower
EG95FS LBH	Light Bulb Holder
EG95FS L SWITCH	Light Switch (momentary)
EG95FS FCWS	Fan Controller
EG95FS LGST	Log Set (with embers)
EG95FS THC	Thermo couple
EG95FS EMB	Embers
EG95FS THP	Thermo pile
EG95FS DG	Door Gasket
EG95FS RV NG	Natural Gas Regulating
EG95FS 160 TS	Convection Fan Sensor 160°

Assessories

Simpson Dura-Vent termination kits

EG95FS SD VDK 1	Horizontal
EG95FS SD VDK 2	Vertical
EG95FS GT	Gold Trim package
EG95FS LVT	Low Voltage Thermostat
EG95FS GDC	Gold Door C/W Glass

15. WARRANTY

Sherwood Industries Ltd. gives a five year limited warranty on all steel manufactured parts. A one year warranty is provided on all gas and electrical components. The above limited warranties are extended only to the original purchaser.

There is no warranty on the following parts:

- Glass window
- Fiberglass gaskets
- Silicone gaskets
- Logs
- Embers
- Paint
- Trims
- Gold Plating

All claims forwarded under this warranty shall be made in writing by your local dealer:

WHEN FILING A WARRANTY CLAIM PLEASE COMPLETE THE FOLLOWING INFORMATION ON AN OFFICIAL WARRANTY CLAIM FORM:

To The Dealer

- Name, address and telephone number of purchaser and date of purchase.
- Date of installation. Name of installer and dealer. Serial number of the appliance. Nature of complaint, defect or malfunction. Description and part # of any parts replaced.

To The Distributor

- Sign and verify that work and information is correct

The limited warranty covers defects in materials and workmanship only if the product has been installed according to the manual's instructions. If the product is damaged or broken as a result of misuse or mishandling the warranty does not apply. The warranty does not cover removal and re-installation costs.

Sherwood Industries Ltd. reserves the right to repair or to replace the defective product. The shipping costs are paid by the consumer. All warranties by the manufacturer are set forth herein and no claim shall be made against the manufacturer on any oral warranty or representation.

Sherwood Industries Ltd. and its employees or representatives will not assume any damages, either directly or indirectly caused by improper usage, operation, installation, servicing or maintenance of this appliance.

Sherwood Industries Ltd. reserves the right to make changes without notice. Please complete and mail the warranty registration card and have the installer fill-in the installation data sheet in the back of the manual for warranty and future reference.

16. INSTALLATION DATA SHEET

The following information must be recorded by the installer for warranty purposes and future reference.

Envirogas Model EG95 Freestanding Gas Stove

Name of Owner:

_____

Address:

_____

_____

_____

Phone: _____

Name of Installer:

_____

Address:

_____

_____

_____

Phone: _____

Name of Dealer:

_____

Address:

_____

_____

_____

Phone: _____

- Serial Number: WH-_____
- Date of Purchase: _____/_____/_____
- Date of Installation: _____/_____/_____
- ____ Natural Gas (Nat.), ____ Propane (LPG)
- Inlet Gas Supply Pressure: _____ in.w.c.

If the orifices were changed by the installer.

- Front Burner Orifice # _____ ,

  Back Burner Orifice # _____ .
- Pilot Orifice # _____ or _____ in.Dia.

Installer's Signature

_____

MANUFACTURED BY:
SHERWOOD INDUSTRIES, 1969 KEATING X RD., SAANICHTON, B.C., CANADA V8M 2A4