SHERWOOD INDUSTRIES IS AN ENVIRONMENTALLY RESPONSIBLE COMPANY
THIS MANUAL IS PRINTED ON 100% RECYCLED PAPER

ENVIRO GAS

By SHERWOOD INDUSTRIES

95 Fireplace Insert Vented Room Heater

OWNERS MANUAL

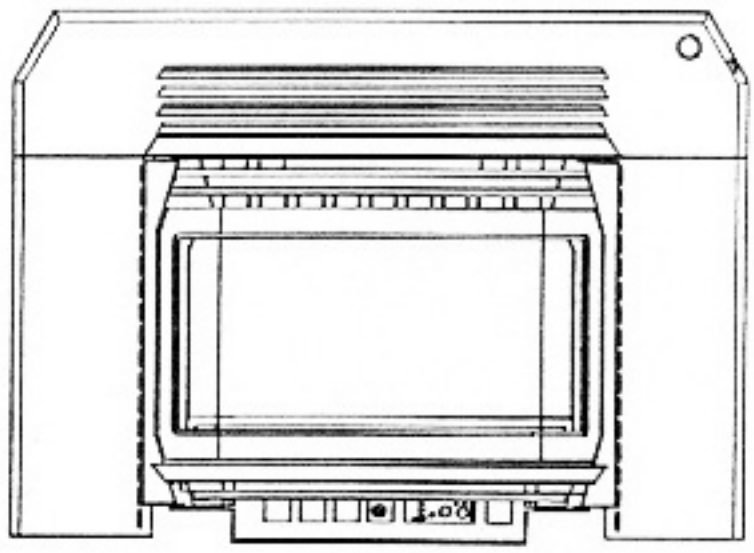

Installation And Operating Instructions For Models:-

ENVIROGAS 95 Fireplace Insert B Vent Natural Gas (EG.95.FPI. BV.Nat.)

ENVIROGAS 95 Fireplace Insert B Vent Propane (EG.95.FPI. BV.LPG.)

FOR YOUR SAFETY

Do not store or use gasoline or other flammable vapors and liquids in the vicinity of this or any other appliance.

WHAT TO DO IF YOU SMELL GAS

- Open windows
- Do not try to light any appliance.
- Do not touch any electrical switch; do not use any phone in your building.
- Immediately call your gas supplier from a neighbor's phone. Follow the gas supplier's instructions.
- If you cannot reach your gas supplier, call the fire department.

WARNING

If the information in this manual is not followed exactly, a fire or explosion may result causing property damage, personal injury or loss of life. Installation and service must be performed by a qualified installer, service agency or the gas supplier.

Do not store or use gasoline or other Flammable vapors and liquids in the vicinity of this or any other appliance.

PLEASE KEEP THESE OPERATING INSTRUCTIONS FOR FUTURE REFERENCE.

SAFETY PRECAUTIONS

FOR SAFE INSTALLATION AND OPERATION OF YOUR "ENVIROGAS" STOVE, PLEASE, CAREFULLY READ THE FOLLOWING INFORMATION:

• All "ENVIROGAS" gas-fired appliances must be installed in accordance with these instructions. Carefully read all the instructions in this manual first. Consult the building authority having jurisdiction to determine the need for a permit prior to commencing the installation.

• **NOTE** Failure to follow these instructions could cause a malfunction of the fireplace which could result in death, serious bodily injury, and/or property damage.
• Failure to follow these instructions may also void your fire insurance and/or warranty.

GENERAL

• Installation and repair should be done by a qualified service person. The appliance should be inspected before use and at least annually by a qualified service person. More frequent cleaning may be required due to excessive lint from carpeting, bedding material, etc. It is imperative that control compartments, burners and circulating air passageways of the appliance be kept clean.

• Due to high temperatures the appliance should be located out of high traffic areas and away from furniture and draperies.
Children and adults should be alerted to hazards of high surface temperatures and should stay away to avoid burns or clothing ignition.

• Young children should be carefully supervised when they are in the same room as the appliance.

• Clothing or other flammable material should not be placed on or near the appliance.

FOR YOUR SAFETY

• Installation and service must be performed by a qualified installer, service agency or the gas supplier.

• This installation must conform with local codes or, in the absence of local codes with the current CAN 1-B 149 installation code in Canada or the National Fuel Gas Code ANSI Z223.1.2 in the USA.

• To prevent injury do not allow anyone who is unfamiliar with the operation to use the stove.

• Always keep the area around these appliances clear of combustible material, gasoline or other flammable vapors and liquids.

• These appliances should not be used as a drying rack for clothing or for hanging Christmas stockings or decorations.

• Due to the paint curing on the stove a faint odor and slight smoking will likely be noticed when the stove is first used. Open a window until the slight smoking stops. Always connect this gas stove to a chimney and vent to the outside of the building envelope. Never vent to another room or inside a building. Make sure you use the vent pipe that is specified. Make sure that the vent is properly sized and is of adequate height to provide the proper draft. Inspect the venting system annually for blockage and any signs of deterioration.

• **Do not operate with cracked or broken glass. Under no circumstances should this appliance be modified. Parts that have to be removed for servicing must be replaced prior to operating this appliance. Only parts supplied by Envirogas should be used in this appliance and replacements should only be performed by a licensed or qualified service person.**

• Never use solid fuels such as wood, paper, cardboard, coal, or any other flammable liquids etc., in this appliance.

• Do not use this heater if any part has been under water. Immediately call a qualified service technician to inspect the heater and to replace any part of the control system and any gas control which has been under water.

• Do not abuse glass by striking or slamming door shut.

TABLE OF CONTENTS

1 Code Approvals 2
2 Specifications 2
3 Assembly and Installation Instruction 3
4 Electrical Requirements 5
5 Gas Line Connection 5
6 Gas Pipe Testing 6
7 Venting 7
8 Air Shutter Adjustment 8
9 Installation of Log Sets and Embers 9
10 Operating Instructions 10
11 Routine Maintenance 11
12 Trouble Shooting 12
13 Parts and Accessories 13
14 Warranty 13
15 Installation Data Sheet 15
16 Maintenance Record 16

1. CODE APPROVALS

These appliances have been tested by International Approval Services Ltd. and found to comply with the established standards for GAS FIRED ROOM HEATER in CANADA and the USA as follows:-

ENVIROGAS 95 VENTED ROOM HEATER / FIREPLACE INSERT (EG.95.FPI.BV.Nat. & LPG.)

TESTED TO: ANSI Z21.11.1-1991, CAN 1-2.1M 86.-1989

2. SPECIFICATIONS

ENVIROGAS 95 FIREPLACE INSERT

Vented Type, designated by the suffix BV, this unit must be vented through a conventional chimney with a certified chimney liner kit.

- has been certified for use with either natural or propane gases. (see rating label.)
- is not for use with solid fuels.
- is approved for bedroom or bedsitting room.
- must be installed on a non combustible surface.
- must be installed in accordance with local codes.
  If none exist use current installation code CAN/CGA B149 in Canada or ANSI Z223.1/NFPA 54 in the USA.
- must be properly connected to a venting system.

WARNING: For installation only in a solid fuel burning fireplace with a working flue and constructed of non combustible material.

FOR INSTALLATIONS ABOVE 2000 FEET

- In Canada, these appliances are certified for altitudes of 0-2,000' and must be derated by 10% for installation at elevations between 2,000 and 4,500'.
- In the USA, the appliance must be derated 4% for every 1,000' above 2,000' elevations.

efficiency rating of this appliance is a product thermal efficiency rating determined under continuous operating conditions and was determined independently of any installed system.

ORIFICE SIZES, PRESSURES AND BTU'S	NATURAL	PROPANE
FRONT BURNER:	#49DMS	#58 DMS
REAR BURNER:	#39DMS	#52 DMS
Manifold Press: ("W.C.)	3.5"	10.0"
Min. Manifold Press:	1.8"	6.2
Max. Supply Press:	7.0"	13.0"
Min. Supply Press:	4.5"	10.5"
Max. BTUH Input:	40,000	38,000
Min. BTUH Input:	28,500	30,000

UNIT DIMENSIONS:

Front Width:	26"/66cm
Height Front:	22"/56cm
Height Back:	19 3/4"/50cm
Depth:	22 1/8"/56cm
Shipping Weight:	256 lb./116 kg

SURROUND DIMENSIONS:

Width:	40" /101cm
High:	22" /56cm

All models are equipped with a variable output gas control.

CLEARANCES TO COMBUSTIBLES:

A. Mantle pillar to stove 10"
B. Stove to 8" wide mantle 12"
Stove must sit on a non-combustible surface
Maintain sufficient clearances for service and maintenance

OTHER DIMENSIONS
A. Depth of unit into fireplace 9 7/8"
B. Depth of unit out of fireplace 12 3/4"
C. Width of side panel 7"
D. Stove top to surround top 6 3/4"
E. Minimum Firebox Size W 34" x H 24" x D 24"

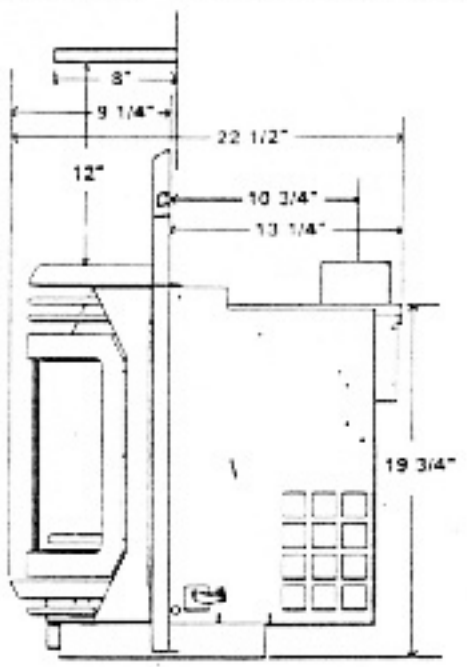

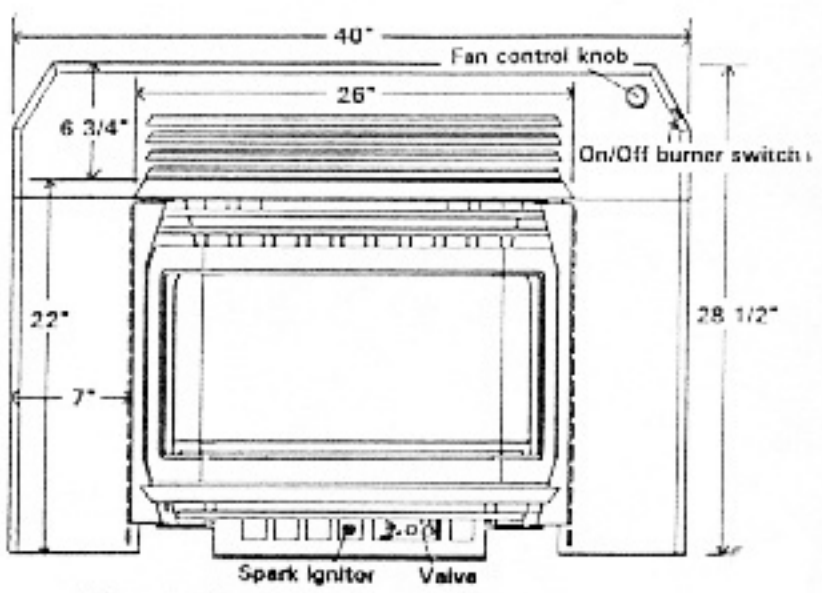

Figure 1

3. ASSEMBLY AND INSTALLATION INSTRUCTIONS

PREPARATION FOR INSTALLATION

- Remove the packaging from the appliance, surround panels and log set, check to make sure there is no damage. Carefully check the glass door. **Do not use the unit if it is damaged.** In the event damage is found please report it to both the courier and your dealer as soon as possible.

- Carefully clean the fireplace and flue before installing the stove. Failure to do so may result in fumes or dirt being blown into the room and may cause a fire leading to death or serious injury.

ASSEMBLING AND INSTALLING YOUR ENVIROGAS APPLIANCE

1. Remove the two wood screws that attach the stove to its pallet. These are located through the square openings immediately behind the surround panel mounting bracket on each side of the unit. (#2 Robertson screwdriver) (See A in Figure 1)

2. Remove the vent collar plate from the top of the stove by unscrewing the T20 Torx screw, located on the center top of the stove and slide backwards. (See figure 2)

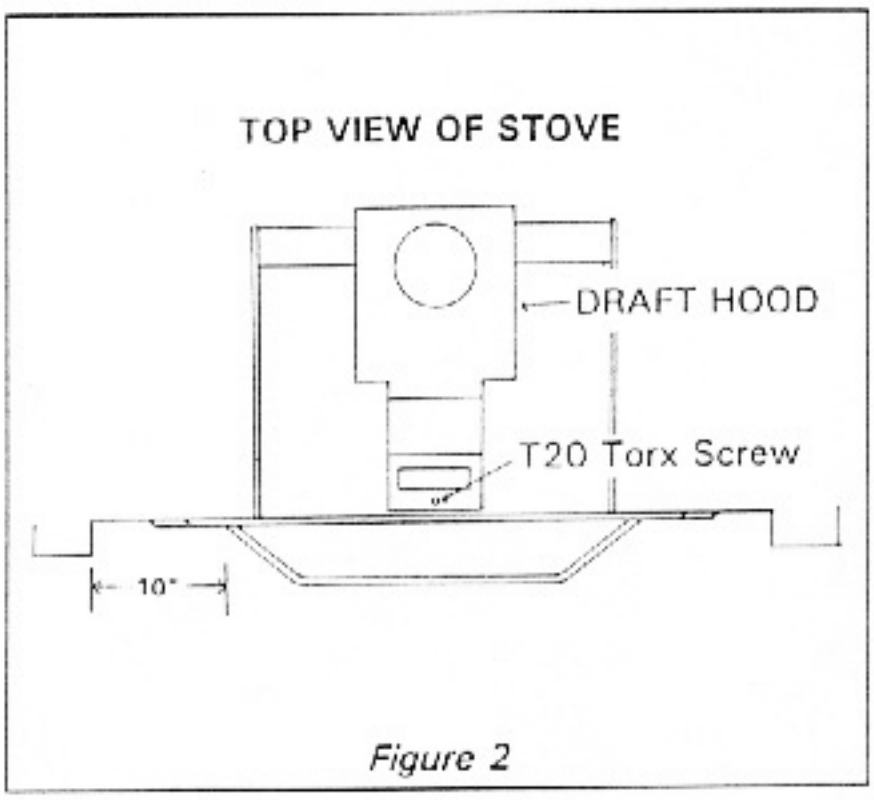

Figure 2

3. Properly secure the vent collar plate to the approved flexible vent pipe liner previously installed in the chimney, secure properly

4 Place the unit part way into the fireplace. Connect the stove to the gas supply using locally approved methods.

5. Place the electric cable so it can be connected to the power supply. Push the unit into its final position in the fireplace insuring that it is stable and level.

6. Reinstall the vent collar plate to the stove by sliding it along the draft hood and secure with the screw.

7. Assemble the surround panel set following the instruction sheet provided. (See figure 3).

8. Remove the hinged side flaps from the panel mounting brackets on each side of the unit (see figure 4).

9. Remove the top grill bar. Undo the 1/4" nuts holding the stove top (7/16" wrench). Lift top up and remove.

10. Connect surround panel wire harness to the stove wire harness following the wiring diagram in figure 5.

11. Place the assembled surround around the stove, in front of the surround mounting brackets Make sure the top surround panel sits flat on the stove.

12. Re-attach the hinged side flaps by sandwiching the surround panels between the mounting brackets and the hinged side flaps. secure with screws.

13. Reinstall the stove top by inserting the locating screws, previously put into the surround panel top, through the holes in the back of the stove top. Push threaded studs through holes in top baffle and tighten nuts. Re-attach the top grill bar.

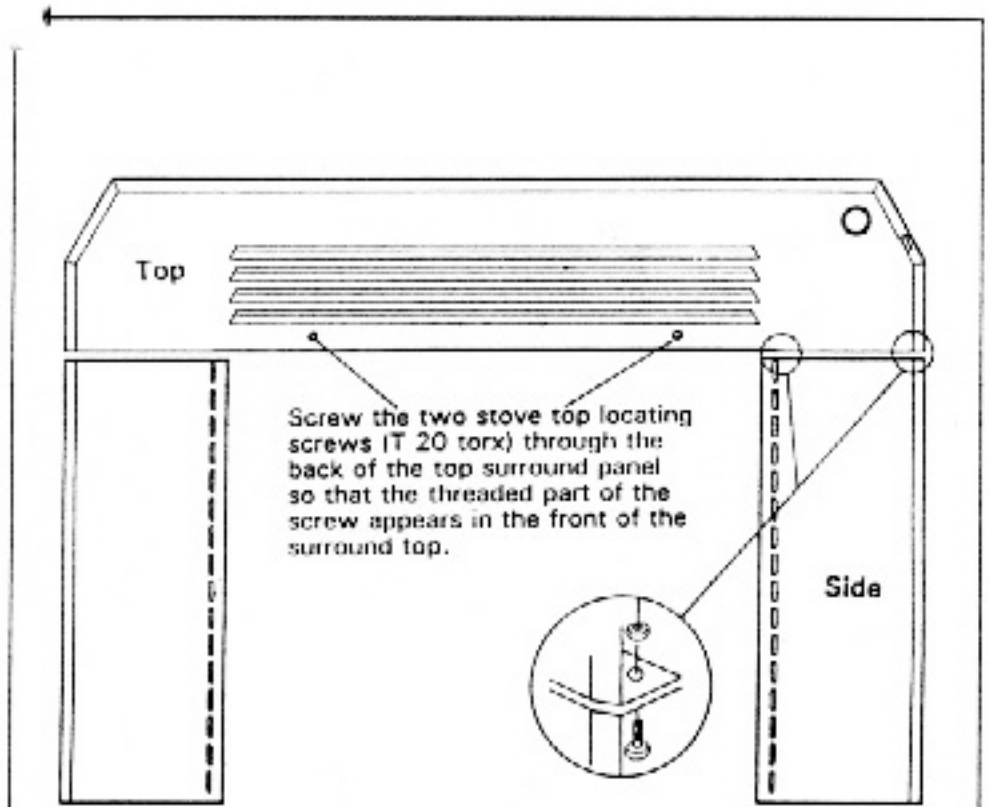

Figure 3

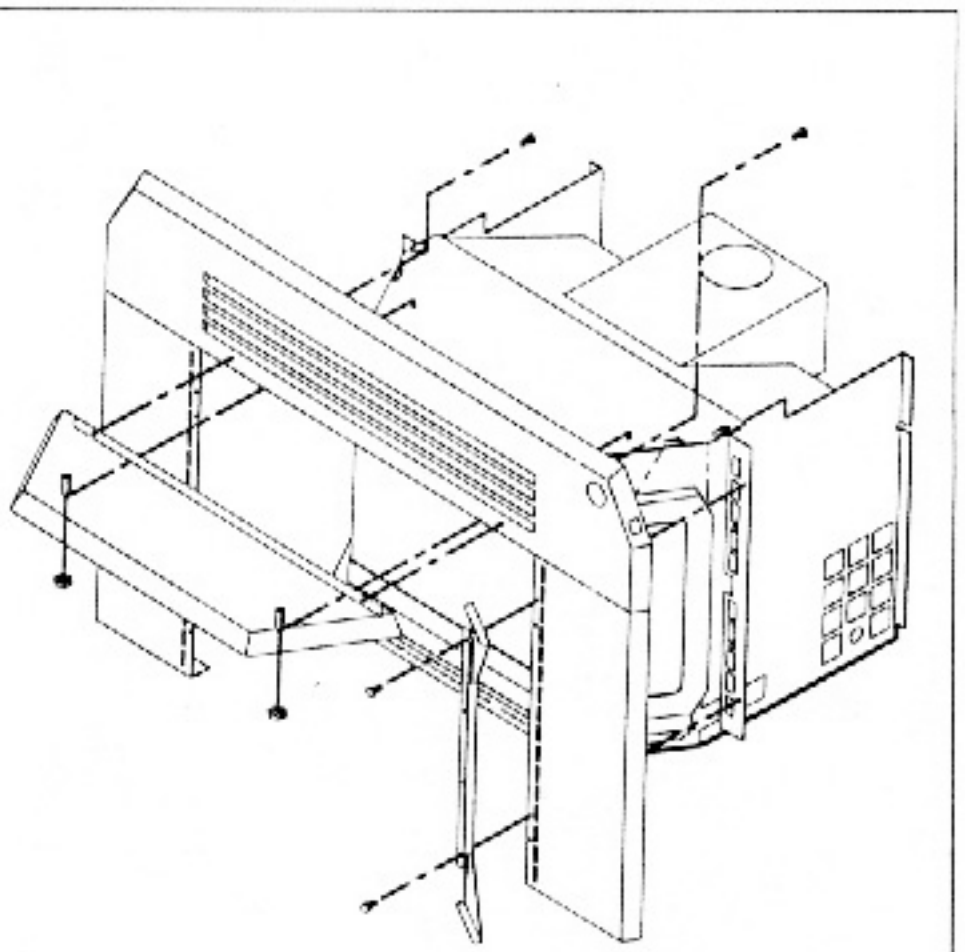

Figure 4

4. ELECTRICAL REQUIREMENTS

The ENVIROGAS EG.95 FPI.BV. will operate without an external electrical power supply. This model has a Millivolt gas control which uses the pilot flame to generate enough electricity to operate the main burners.

The appliance when installed, must be electrically connected and grounded in accordance with local codes or in the absence of local codes, with the current CSA C22.1 CANADIAN ELECTRICAL CODE Part 1, SAFETY STANDARDS FOR ELECTRICAL INSTALLATIONS, OR THE NATIONAL ELECTRICAL CODE ANSI / NFPA 70 in the USA.

NOTE:

- Operation of the fan increases the efficiency and heat output of the unit.
- This unit is able to operate with a millivolt rated thermostat.
- To connect the thermostat disconnect the two purple wires in the harness. Install the thermostat in series with the purple wires.

CAUTION Label all wires prior to disconnection when servicing controls. Wiring errors can cause improper and dangerous operation. Verify proper operation after servicing.

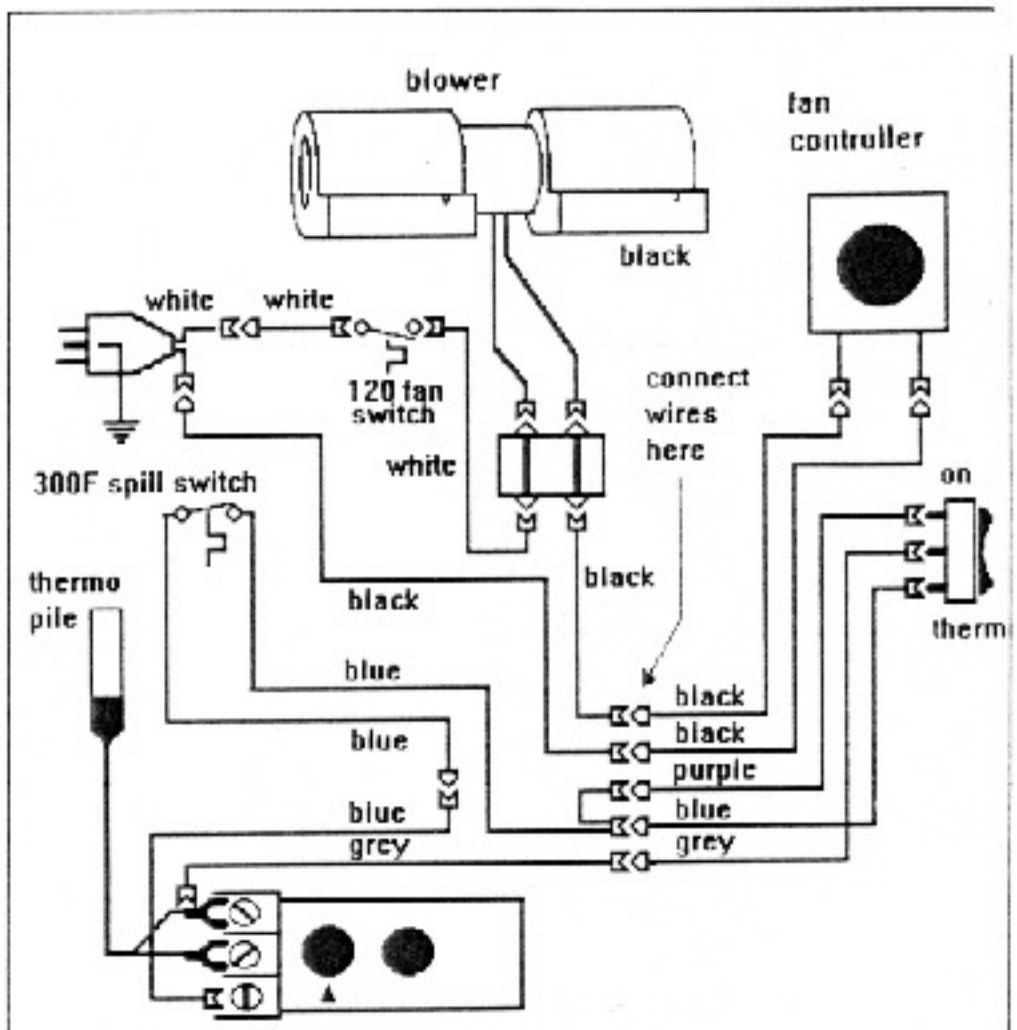

Figure 5

WARNING: Electrical grounding instructions. This appliance is equipped with a three-prong (grounding plug for your protection against shock hazard, and should be plugged directly into a properly grounded three-prong outlet. DO NOT cut or remove the grounding prong from this plug.

5. GAS LINE CONNECTION

WARNING: Only persons licensed to work with gas piping may make the necessary gas connections to this appliance.

GAS LINE CONNECTION

This stove is equipped with a certified flexible pipe located on the right hand side of the unit terminating in a 3/8" male NPT fitting. Consult your local authorities codes or the CAN/CGA B 149 (1 or 2) installation code in Canada or in the USA gas installations follow either local codes or the current edition of the National Fuel Gas Code ANSI Z223.1.

NOTE: The gas line connection may be made using 3/8" rigid tubing or an approved flex connector.

6. GAS PIPE TESTING

NLET GAS SUPPLY PRESSURE

	DESIRED PRESSURE	MINIMUM PRESSURE	MANIFOLD PRESSURE
NAT	7.0 in.w.c.	4.5 in.w.c.	High 3.5 in.w.c. Low 1.8 in.W.C.
LPG	11.0 in.w.c.	10.5 in.w.c.	High 10. In.w.c. Low 6.2 in.W.C.

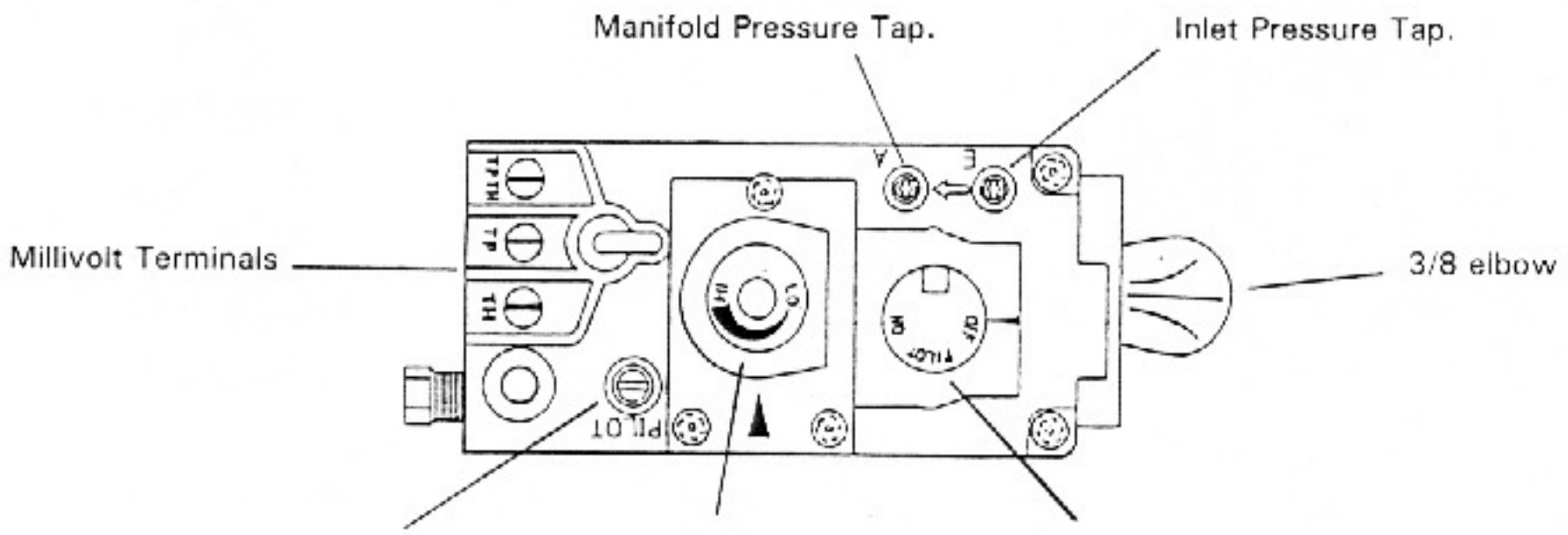

Figure 6

The appliance and its shutoff valves must be disconnected from the gas supply piping system during any pressure testing where the pressure exceeds 1/2 PSIG (3.45 kpa) or damage will occur to the valve.

The appliance must be isolated from the gas supply piping system by closing its individual manual shutoff valve during any pressure testing of the gas supply piping system at test pressures equal to or less than 1/2 psig (3.5 kPa).

TO TEST

The pressure taps are located in the top right corner on the valve face (right - inlet, left - manifold pressure).

- Turn set screw counter clockwise to loosen, 2 turns.
- Place 5/16" I.D. hose over pressure tap system.
- When finished, release pressure, remove hose & tighten set screw.

Always check for gas leaks with a soap and water solution after completing the required pressure test.

NEVER USE AN OPEN FLAME FOR LEAK TESTING.

7. VENTING

WARNING: THIS APPLIANCE HAS BEEN DESIGNED TO OPERATE BY DRAWING COMBUSTION AIR AND DILUTION AIR FROM THE ROOM. IT IS ALSO DESIGNED TO DRAW ROOM AIR FOR PROPER HEAT CIRCULATION FROM THE REAR OF THE UNIT. BLOCKING OR MODIFYING THE LOUVERS IN ANY WAY CAN CREATE HAZARDOUS SITUATIONS, EITHER THROUGH POOR VENTING OR BY OVERHEATING. IT IS IMPORTANT THAT THIS UNIT HAS SUFFICIENT AIR CIRCULATION FOR PROPER VENTING AND COMBUSTION THUS PROVISIONS MUST BE MADE FOR THE SUPPLY OF ADEQUATE COMBUSTION AND VENTILATION AIR.

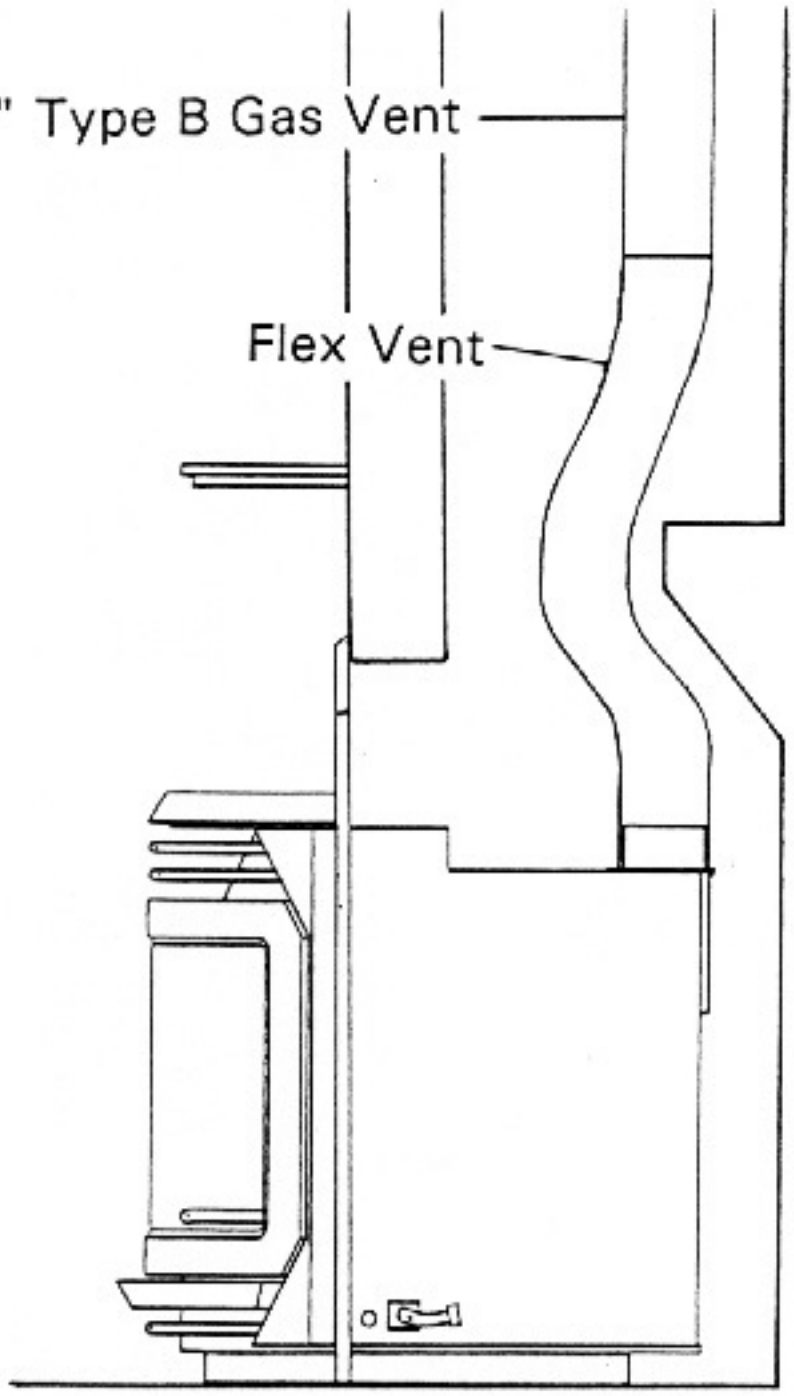

Figure 7

THE APPLIANCE MUST NOT BE CONNECTED TO A CHIMNEY FLUE SERVICING A SEPARATE SOLID FUEL BURNING APPLIANCE.

VENTING FIREPLACE INSERTS

The Envirogas insert may be installed and vented into any solid fuel fireplace that has been installed in accordance with the National, Provincial/State and local building codes and has been constructed of non-combustible materials.

An approved 4" chimney liner, throat connector, and rain cap must be installed, to ensure a tight seal, top performance, safety and efficiency. Carefully follow the chimney manufacturers instructions which accompany the liner kit.

Measure the height of the chimney beforehand and purchase the appropriate kit. Never attempt to over stretch a flexible liner to accommodate the height of the chimney.

Install sealed throat connector to prevent leakage of room air through chimney.

Any flue damper must be removed or blocked permanently in the open position.

The chimney must be clean, in good working order and constructed out of non-combustible materials.

Make sure that all chimney cleanouts are tightly fitting and will not permit air to leak into the chimney.

Remove the vent collar plate from the top of the insert and connect it securely with at least 3 sheet metal screws and a 4" hose clamp. Check for any tears in the liner at this point. (See also Assembly and Installation Instructions section 3.)

IMPORTANT: Replace the screw which holds the vent collar plate in it's approved position.

Canada only: To inspect draft from the front of the unit, open right side hinged flap. Locate 3/8" tube and check for draft using smoke or magnehelic gauge. A vacuum will indicate proper drafting.

AUTOMATIC FLUE GAS SPILL SWITCH

NOTE: THIS HEATER MUST BE PROPERLY CONNECTED TO A VENTING SYSTEM. THIS HEATER IS EQUIPPED WITH A VENT SAFETY SHUTOFF SYSTEM DESIGNED TO PROTECT AGAINST IMPROPER VENTING OF COMBUSTION PRODUCTS.

THIS SAFETY SWITCH IS LOCATED ON THE REAR OF THE APPLIANCE CLOSE TO THE DRAFT HOOD RELIEF OPENING.

IF THE SWITCH TRIPS MORE THAN ONCE THE CHIMNEY SHOULD BE INSPECTED BY A QUALIFIED SERVICE TECHNICIAN FOR POSSIBLE BLOCKAGE OR SEVERE DOWN DRAFT CONDITIONS

This stove can be vented with aluminium or stainless steel flex vent and/or certified 4" Type B Gas Vent. The flue collar of the appliance will fit inside of a standard 4" vent and may be fastened directly to the vent.

Check periodically that the vent is unrestricted and an adequate draft is present when the unit is in operation.

WARNING: Operation of this heater when not connected to a properly installed and maintained venting system or tampering with the vent safety shutoff system can result in carbon monoxide (CO) poisoning and possible death.

8. AIR SHUTTER ADJUSTMENT

- There is a separate venturi air shutter for each burner
- The venturis have been set for installation at sea level
- On LP burners: loosen the 2 set screws with a long phillips screwdriver and rotate the air shutters to the correct setting.
- On Nat.Gas: with a long screwdriver rotate spring clips to open/close the shutter to correct setting.

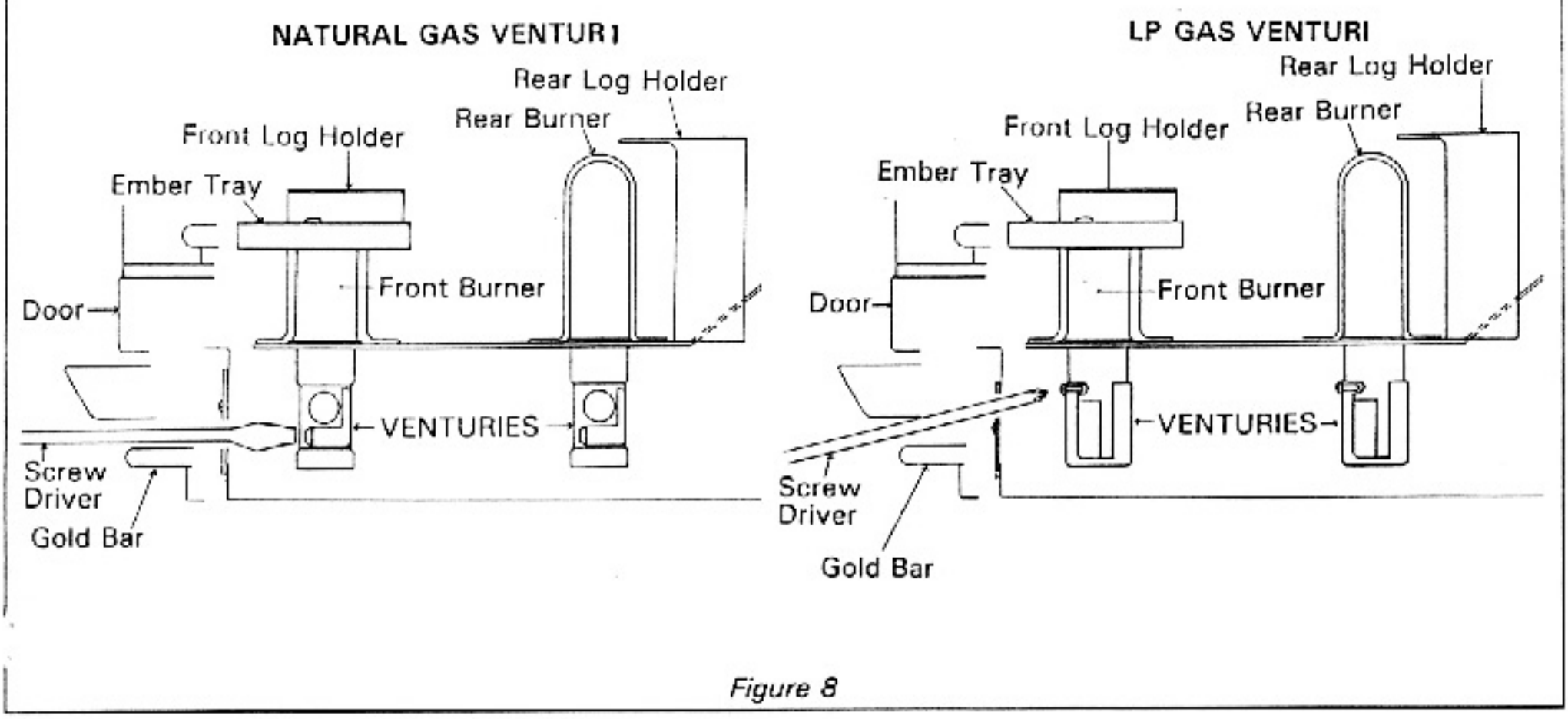

Figure 8

9. INSTALLATION OF LOG SET and EMBERS

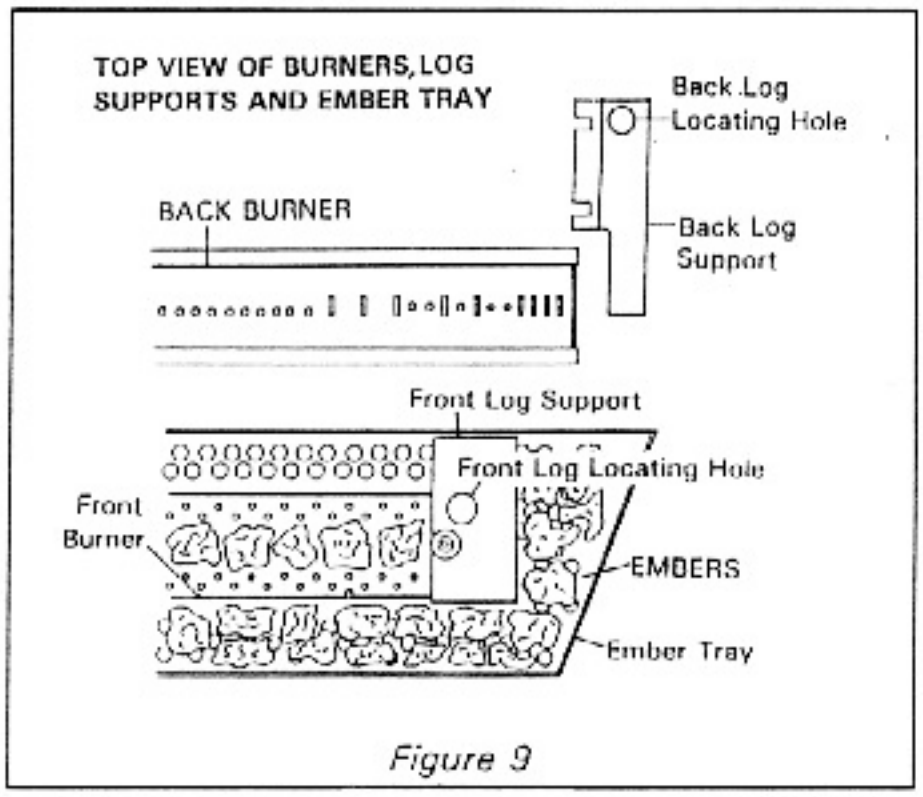

Figure 9

a. INSTALLING THE GLOWING EMBERS

A bag of ceramic fiber embers is provided for use on the front burner tray.

CAUTION: Use only the type of ember material supplied with this appliance. Due to the irregular size of the ember material there may be more than required. Use only a single layer. Do not pile embers. The use of other foreign materials on the burners may create dangerous conditions.

If over time, through cleaning and servicing these embers require replacement, contact your nearest ENVIROGAS dealer for replacement embers.

1. Gently remove the ember material from the plastic bag. Spreading these pieces evenly across the front of the ember tray and around the sides, Place a single layer of embers on top of the front burner. (Figure. 8)

3. Carefully avoid any clumping or large build ups. Do not pack down, leave embers loose.

5. **DO NOT PLACE EMBERS ON THE REAR BURNER.**

6. Upon the first light up, watch for ignition to **all** burner ports. If a long delay is noted:

a) First, wait for the appliance to cool down
b) Open the front door of the appliance.
c) Carefully reposition the embers making sure that burner ports are not plugged solid or blocked

CAUTION: NEVER OPERATE THIS APPLIANCE WITH THE DOOR REMOVED

INSTALLING THE 4 PIECE LOG SET

Carefully remove logs from box. Check to ensure there is no damage to any of the four (4) logs. It is very important to install these logs in their proper positions to insure safe optimum operating conditions. (SEE LOG SET Figure 9)

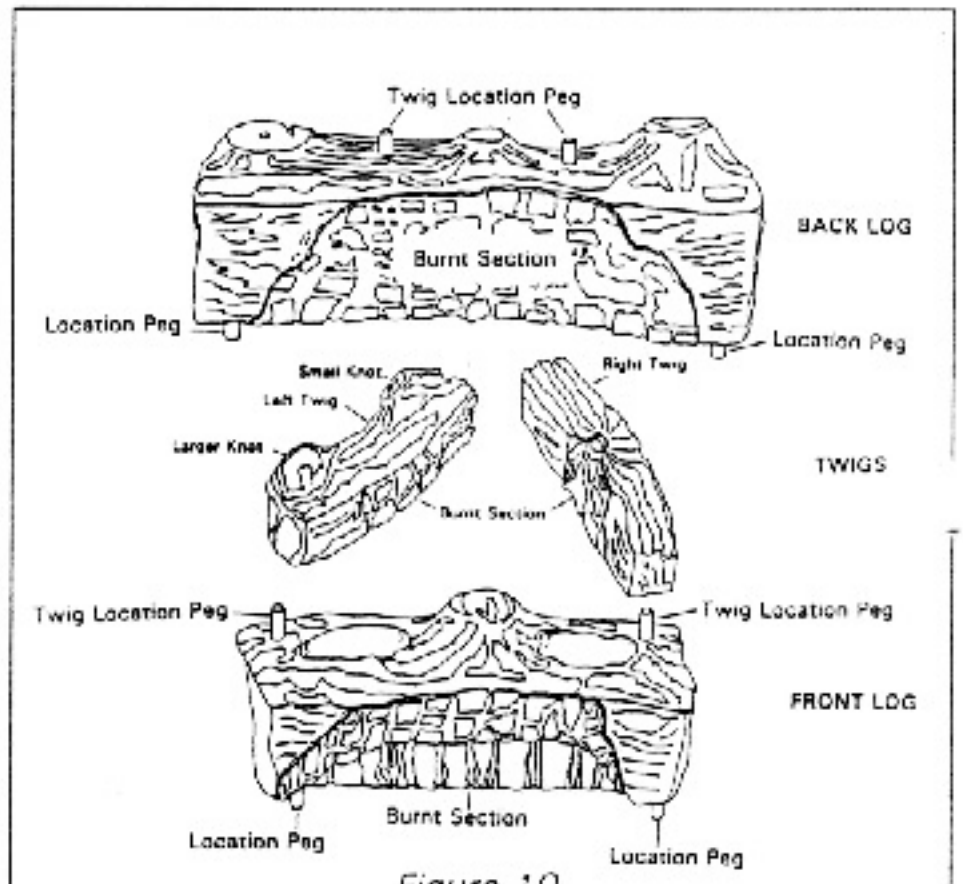

Figure 10

1. Open the front door.

2 Place rear log with Burnt Area forward on rear log supports. By matching bottom pegs to the receiving holes in rear log supports.

3.Place front log on front log supports. By matching pegs to the front receiving holes in front log supports

5. Place the two cross logs on the positioning pegs according to the diagram shown above.(Figure 9)

10. OPERATING INSTRUCTIONS

FOR YOUR SAFETY READ BEFORE OPERATING

WARNING: IF YOU DO NOT FOLLOW THESE INSTRUCTIONS EXACTLY, A FIRE OR EXPLOSION MAY RESULT CAUSING PROPERTY DAMAGE, PERSONAL INJURY OR LOSS OF LIFE.

A) This appliance is equipped with a pilot which must be lit by hand by following these instructions exactly.
B) Use only your hand to turn the gas control knob. Never use tools. If the knob will not push in or turn by hand, do not try to repair it . Call a qualified service technician. Force or attempted repair may result in a fire or explosion.
C) Before operating, smell all around the appliance area for gas, and next to the floor because some gas is heavier than air and will settle on the floor.

IF YOU SMELL GAS, SEE FRONT COVER FOR INSTRUCTIONS.

LIGHTING INSTRUCTIONS

1. WARNING The gas valve has an lockout device which will not allow the pilot burner to be relit until the thermocouple has cooled. Allow approx.60 seconds for the thermocouple to cool.
2. STOP! Read the above safety information
3. Turn the gas "hi/low" knob to the lowest level
4. Turn off all electrical power to the appliance
5. Set the "on/off/thermo" burner switch to the middle "off" position.(located on the top-right side of the surround panel set)
6. Depress pilot gas knob slightly and turn clockwise ↷ to the "off' position.
7. Wait five minutes to clear out any gas. If you smell gas including near the floor, STOP! Follow "C" in the above safety information If you don't smell gas go to next step.
8. Find pilot located in front of rear burner.
9. Depress pilot knob slightly and turn counter-clockwise ↶ to "pilot".
10. Fully depress and hold the pilot gas knob while lighting the pilot with the push button piezo spark ignitor. Keep knob depressed for 15 seconds, then release. If pilot does not continue to burn, repeat steps 5 through 8.
11. Wait 1 minute, depress pilot gas knob slightly and turn counter-clockwise ↶ to the "on" position. Turn the burner switch to the "on" position(or "thermostat" position when equipped).
12. Check to ensure that the right branch of the pilot flame is engulfing the thermocouple tip, while the left branch of the pilot flame is engulfing the thermopile and the other two branches are long enough to light the front and rear burners.
13. Check to ensure that the main burners light instantly when the burner switch is turned on and that the flame carries across all the burner ports evenly.
14. Turn gas "hi/lo" output knob to the desired setting.
15. Turn on all electrical power to the unit.

TO TURN UNIT OFF

1. Turn off all electrical power to the appliance if service is to be performed.
2. Place burner switch in the "off" position.
3. Depress the pilot gas knob slightly and turn clockwise ↷ to the offposition. Do Not Force.

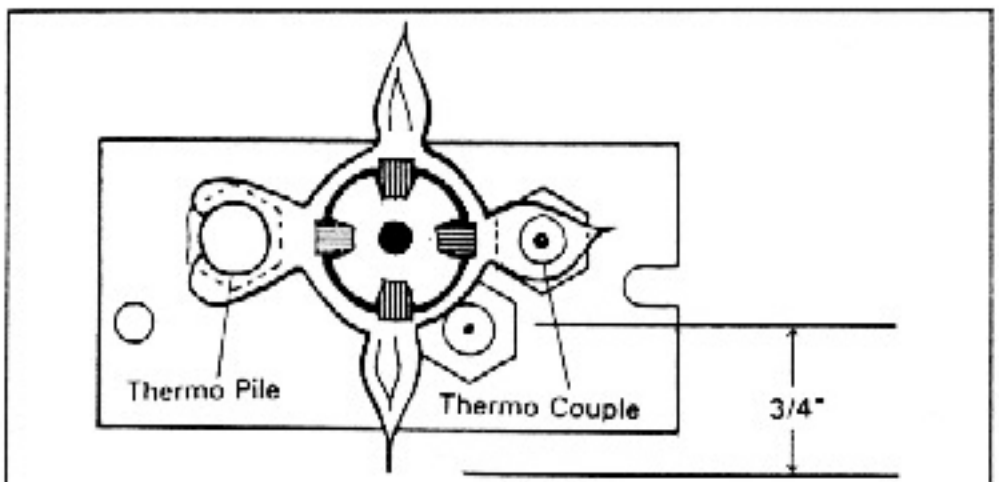

Figure 11

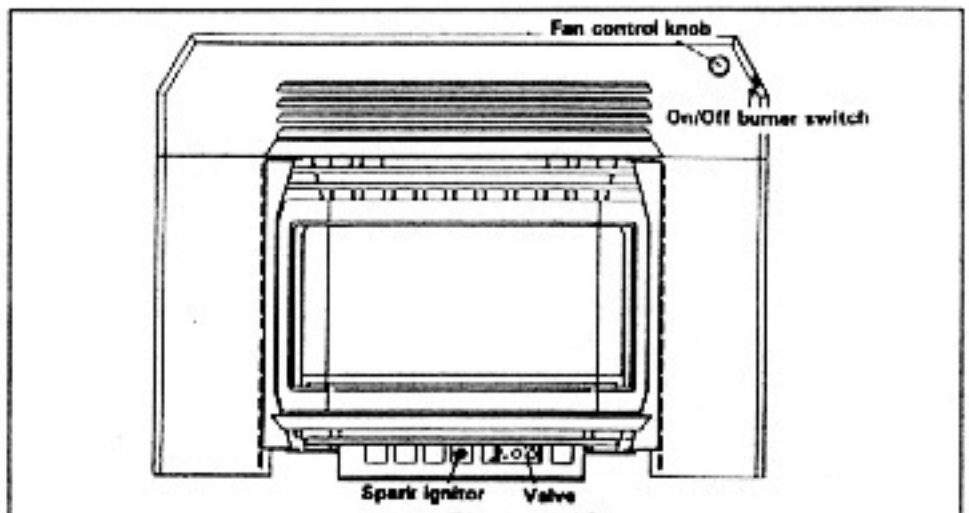

Figure 12

11. ROUTINE MAINTENANCE

Periodically check to ensure that the "B-Vent" venting system is clear and that a negative draft is present when the unit is operating.

CLEANING OF GLASS

Do not clean glass when hot

It will be necessary to clean the ceramic glass periodically. During a cold start up condensation will sometimes form on the glass, this is a normal condition with all gas fireplaces and stoves. However, sometimes this condensation can allow dust and lint to cling to the glass surface. Also, sometimes initial paint curing of the appliance can leave behind a slight film on the glass. This is a temporary problem. It is therefore recommended that the glass be cleaned initially after about the first two weeks of use.

After that, depending upon the amount of use, cleaning should be required no more than two or three times per season.
To clean the door, use a mild glass cleaner and a soft cloth. Abrasive cleaners will damage the glass surface.

OPENING THE GLASS DOOR

Turn unit off and wait until the appliance has cooled down.

1. Open the right hand hinged side flap which will expose a door fastener. Using a 1/2" wrench, loosen off the fastener.

2. Due to the shape of the bay window door. You must also open the left hand side flap before attempting to opening the Bay window door.

3. Ensure the door is properly fastened after cleaning before attempting to re-light the appliance.

TO REPLACE DOOR AND GLASS ASSEMBLY

The glass in this appliance is an integral part of the door assembly. If the glass is damaged or broken a replacement door assembly including glass must be fitted.

- open door fully
- Lift door vertically so that hinge pins lift out of hinge receivers.
- Return assembly to dealer

Door and glass assembly must be replaced as a complete unit by your Envirogas Dealer. No substitute materials are allowed.

FOR CLEANING THE INSIDE OF THE FIREBOX

Remove the log set carefully from the firebox. Gently remove the embers and place on a piece of paper towel. Until ready to replace.

Vacuum the firebox thoroughly. Carefully clean off any dust on the logs and remove any lint from the main burner and pilot burner.

After carefully replacing the logs and embers in their correct positions, and the door has been resealed, re-light the pilot, following the instructions on the attached label.

CLEARANCES MUST BE SUFFICIENT TO ALLOW ACCESS FOR MAINTENANCE AND SERVICE

LUBRICATING THE BLOWERS

EVERY 6 MONTHS

1. Turn the unit off and remove the log set.

2. Remove the burner tray assembly by removing the screw on either side of the tray, between the front and rear burners. Lift tray out.

3. remove the 8 screws that hold the blower mounting plate to the back firewall.

4. Carefully pull the blower assembly into the firebox, exposing the blower lubricating holes (located on the top of the motor housing on either side of the label). Add 2 drops of SAE 20 oil.

-- If removal of the blower is necessary, disconnect the 2 black blower leads from the terminal block, located on the floor of the fan compartment. Remove the blower.

5. To re-install, check gasket and reverse steps 1 through 4.

12. TROUBLE SHOOTING

oblem	Cause	Solution
Spark will not light the pilot after repeated pressing of spark ignitor	Defective ignitor	Check connections to ignitor -If ignitor connections are good but there is no spark-replace ignitor
	Misaligned spark electrode	-check for spark arcing from the electrode to pilot if not adjust by loosening screws on pilot base. Adjust and re-tighten
Pilot will not remain lit	Defective thermocouple	-check for proper connection of thermocouple to rear of valve
	Air in gas line	-bleed line -contact dealer
Burners will not light when valve and burner switch are both on	Defective switch	-check switch connections jump wires at switch
	Defective thermo-pile	-check connections to valve -check voltage across TP terminals (> 250 mv closed circuit) -contact dealer
	Thermostat set to low / defective	-turn up the thermostat to start unit. Check thermostat connections
	Defective spill switch or Severe down draft.	-check connections -check draft -contact dealer
Glass fogs up	Normal conditions - after the appliance warms up glass will clear Due to additives in gas glass may dirty	
Blue flames	Normal during start - flame will yellow as the appliance heats up.	
Sooting	Flame impingement	-check log position -increase primary air by opening shutters

13. PARTS AND ACCESSORIES

Service Parts available from your local Envirogas Dealer.

EG95FPI NG BURNER	Nat Gas Burner Control Assembly
EG95FPI LP BURNER	LPG Burner Control Assembly
EG95FPI RV NG	Natural Gas Regulating Valve
EG95FPI RV LPG	LPG Regulating Valve
EG95FPI NG PILOT	Natural Gas Pilot Assembly
EG95FPI LP PILOT	LPG Pilot Assembly
EG95FPI THC	Thermo couple
EG95FPI THP	Thermo pile
EG95FPI GSI	Peizo Ignitor
EG95FPI.IE	Ignitor Electrode
EG95FPI 300TS	B-vent spill switch 300°
EG95FPI OB	Orifice Blank
EG95FPI CVB	Convection Blower
EG95FPI FCWS	Fan Controller
EG95FPI 120 TS	Convection Fan Sensor 120°
EG95FPI PC	Power Cord
EG95FPI WH	Wire Harness
EG95FPI LGST	Log Set (with embers)
EG95FPI EMB	Embers
EG95FPI DG	Door Gasket
EG95FPI FPG	Fan plate gasket
EG95FPI DB	Door Bolt
EG95FPI SPM	Side Panel Magnet
EG95FPI BSW	Burner switch

Accessories

EG95FPI GDC	Gold Door C/W Glass
EG95FPI GT	Gold Trim package
EG95FPI LVT	Low Voltage Thermostat

14. WARRANTY

ierwood Industries Ltd. gives a five year limited warranty on all steel manufactured parts. A one year warranty is ovided on all gas and electrical components. The above limited warranties are extended only to the original purchaser.

There is no warranty on the following parts:

- Glass window
- Fiberglass gaskets
- Logs
- Embers
- Paint
- Gold Plating

All claims forwarded under this warranty shall be made in writing by your local dealer:

DEALERS: WHEN FILING A WARRANTY CLAIM PLEASE COMPLETE THE FOLLOWING INFORMATION ON AN OFFICIAL WARRANTY CLAIM FORM:

To The Dealer

- Name, address and telephone number of purchaser and date of purchase.
- Date of installation. Name of installer and dealer. Serial number of the appliance. Nature of complaint, defect or malfunction. Description and part # of any parts replaced.

To The Distributor

Sign and verify that work and information is correct

The limited warranty covers defects in materials and workmanship only if the product has been installed according to the manual's instructions. If the product is damaged or broken as a result of misuse or mishandling the warranty does not apply. The warranty does not cover removal and re-installation costs.

Sherwood Industries Ltd. reserves the right to repair or to replace the defective product. The shipping costs are paid by the consumer. All warranties by the manufacturer are set forth herein and no claim shall be made against the manufacturer on any oral warranty or representation.

Sherwood Industries Ltd. and its employees or representatives will not assume any damages, either directly or indirectly caused by improper usage, operation, installation, servicing or maintenance of this appliance.

Sherwood Industries Ltd. reserves the right to make changes without notice

. **Please complete and mail the warranty registration card and have the installer fill-in the installation data sheet in the back of the manual for warranty and future reference.**

15. INSTALLATION DATA SHEET

The following information must be recorded by the installer for warranty purposes and future reference.

Envirogas Model EG95FPI Freestanding Gas Stove

Name of Owner:

_____

Address:

_____

_____

_____

Phone: _____

Name of Installer:

_____

Address:

_____

_____

_____

Phone: _____

Name of Dealer:

_____

Address:

_____

_____

_____

Phone: _____

- Serial Number: WH-_____
- Date of Purchase: _____/_____/_____
- Date of Installation: _____/_____/_____
- ____ Natural Gas (Nat.), ____ Propane (LPG)
- Inlet Gas Supply Pressure: _____ in.w.c.

If the orifices were changed by the installer.

- Front Burner Orifice # _____ ,

  Back Burner Orifice # _____ .
- Pilot Orifice # _____ or _____ in.Dia.

Installer's Signature

_____

MANUFACTURED BY:
SHERWOOD INDUSTRIES, 1969 KEATING X RD., SAANICHTON, B.C., CANADA V8M 2A4